US008330710B2

(12) **United States Patent**
Roberts et al.

(10) **Patent No.: US 8,330,710 B2**
(45) **Date of Patent: *Dec. 11, 2012**

(54) **SYSTEMS AND METHODS FOR CONTROLLING A SOLID STATE LIGHTING PANEL**

(75) Inventors: **John K. Roberts**, Grand Rapids, MI (US); **Keith J. Vadas**, Lowell, MI (US)

(73) Assignee: **Cree, Inc.**, Durham, NC (US)

(*) Notice: Subject to any disclaimer, the term of this patent is extended or adjusted under 35 U.S.C. 154(b) by 0 days.

This patent is subject to a terminal disclaimer.

(21) Appl. No.: **13/270,387**

(22) Filed: **Oct. 11, 2011**

(65) **Prior Publication Data**

US 2012/0025723 A1 Feb. 2, 2012

Related U.S. Application Data

(63) Continuation of application No. 11/745,713, filed on May 8, 2007, now Pat. No. 8,049,709.

(51) **Int. Cl.**
G09G 3/36 (2006.01)

(52) **U.S. Cl.** **345/102**; 345/98

(58) **Field of Classification Search** 345/87, 345/102, 204, 211

See application file for complete search history.

(56) **References Cited**

U.S. PATENT DOCUMENTS

3,787,752	A	1/1974	Delay
4,298,869	A	11/1981	Okuno
4,685,303	A	8/1987	Branc et al.
4,988,889	A	1/1991	Oughton, Jr.
5,128,595	A	7/1992	Hara
5,461,397	A	10/1995	Zhang et al.
5,661,645	A	8/1997	Hochstein
5,767,818	A	6/1998	Nishida
5,783,909	A	7/1998	Hochstein
5,793,343	A	8/1998	Hart et al.
5,812,105	A	9/1998	Van de Ven
5,973,483	A	10/1999	Jo
6,051,935	A	4/2000	Bucks et al.
6,150,771	A	11/2000	Perry
6,153,985	A	11/2000	Grossman
6,161,910	A	12/2000	Reisenauer et al.
6,236,331	B1	5/2001	Dussureault
6,285,139	B1	9/2001	Ghanem
6,329,758	B1	12/2001	Salam

(Continued)

FOREIGN PATENT DOCUMENTS

GB	2 249 840	5/1992

(Continued)

OTHER PUBLICATIONS

In-Plug® series: IPS401, "High Efficiency, High Power Factor, Universal High Brightness White LED Controller", ASIC Advantage Inc.

(Continued)

Primary Examiner — Nitin Patel
(74) *Attorney, Agent, or Firm* — Myers Bigel Sibley & Sajovec

(57) **ABSTRACT**

Provided are systems and methods for controlling a solid state lighting panel. A system according to some embodiments of the invention includes a controller that provides control signals to current drivers that are configured to provide current to multiple solid state lighting devices. The system also includes a sequence generator that generates a firing sequence for firing multiple strings of slid state lighting devices.

57 Claims, 12 Drawing Sheets

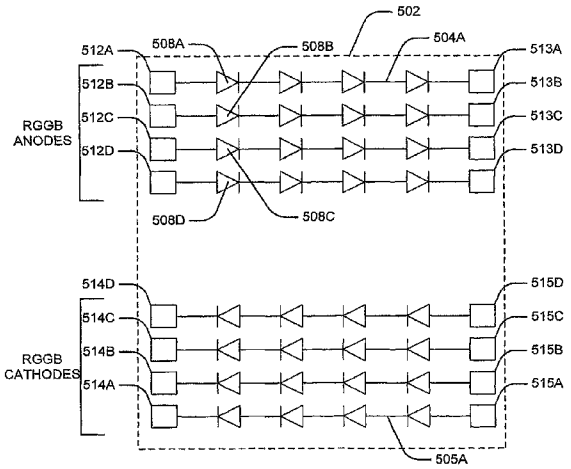

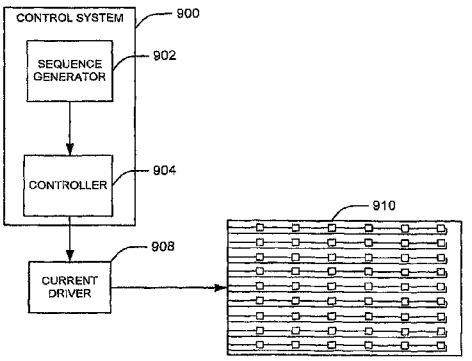

U.S. PATENT DOCUMENTS

6,329,760	B1	12/2001	Bebenroth	
6,329,764	B1	12/2001	Van de Ven	
6,351,079	B1	2/2002	Willis	
6,362,578	B1	3/2002	Swanson et al.	
6,388,393	B1	5/2002	Illingworth	
6,441,558	B1	8/2002	Muthu et al.	
6,459,919	B1	10/2002	Lys et al.	
6,510,995	B2	1/2003	Muthu et al.	
6,515,434	B1	2/2003	Biebl	
6,552,495	B1	4/2003	Chang	
6,577,072	B2	6/2003	Saito et al.	
6,577,512	B2	6/2003	Tripathi et al.	
6,586,890	B2	7/2003	Min et al.	
6,616,291	B1	9/2003	Love	
6,618,031	B1	9/2003	Bohn, Jr. et al.	
6,630,801	B2	10/2003	Schuurmans	
6,793,374	B2	9/2004	Begemann	
6,836,081	B2	12/2004	Swanson et al.	
6,847,342	B2	1/2005	Tsuji	
6,858,994	B2	2/2005	Vollrath	
6,985,124	B1	1/2006	Nogawa	
7,014,336	B1	3/2006	Ducharme et al.	
7,038,399	B2	5/2006	Lys et al.	
7,088,334	B2	8/2006	Adachi et al.	
7,122,971	B2	10/2006	Yeh et al.	
7,148,632	B2	12/2006	Berman et al.	
7,202,608	B2	4/2007	Robinson et al.	
7,213,940	B1	5/2007	Van De Ven et al.	
7,239,087	B2	7/2007	Ball	
7,285,923	B2	10/2007	Yu	
7,317,287	B2	1/2008	Blumel	
7,327,337	B2	2/2008	Callahan	
7,365,717	B2	4/2008	Lee et al.	
7,495,397	B2 *	2/2009	Okabe	315/169.1
7,557,524	B2	7/2009	Chevalier et al.	
7,557,779	B2	7/2009	Tanada	
7,633,577	B2	12/2009	Moon et al.	
7,642,725	B2	1/2010	Cusinato et al.	
7,724,220	B2	5/2010	Yen et al.	
8,049,709	B2 *	11/2011	Roberts et al.	345/102
2001/0024112	A1	9/2001	Jacobs et al.	
2002/0070914	A1	6/2002	Bruning et al.	
2002/0145392	A1	10/2002	Hair, III et al.	
2003/0112216	A1	6/2003	Choi	
2004/0046510	A1	3/2004	Allen	
2005/0035728	A1	2/2005	Schanberger et al.	
2005/0231459	A1	10/2005	Furukawa	
2006/0125773	A1	6/2006	Ichikawa et al.	
2006/0139954	A1	6/2006	Kobori et al.	
2006/0176411	A1	8/2006	Furukawa	
2006/0214876	A1	9/2006	Jendbro et al.	
2007/0046590	A1	3/2007	Umezaki et al.	
2007/0115248	A1	5/2007	Roberts et al.	
2007/0137074	A1	6/2007	Van De Ven et al.	
2007/0139920	A1	6/2007	Van De Ven et al.	
2007/0139923	A1	6/2007	Negley et al.	
2007/0159434	A1	7/2007	Yen et al.	
2007/0170447	A1	7/2007	Negley et al.	
2007/0171145	A1	7/2007	Coleman et al.	
2007/0236911	A1	10/2007	Negley	
2007/0247414	A1	10/2007	Roberts	
2007/0263393	A1	11/2007	Van De Ven	
2007/0267983	A1	11/2007	Van De Ven et al.	
2007/0274063	A1	11/2007	Negley	
2007/0274080	A1	11/2007	Negley et al.	
2007/0278503	A1	12/2007	Van De Ven et al.	
2007/0278934	A1	12/2007	Van De Ven et al.	
2007/0279440	A1	12/2007	Negley	
2007/0279903	A1	12/2007	Negley et al.	
2007/0280624	A1	12/2007	Negley et al.	
2008/0048582	A1	2/2008	Robinson	
2008/0084685	A1	4/2008	Van De Ven et al.	
2008/0084700	A1	4/2008	Van De Ven	
2008/0084701	A1	4/2008	Van De Ven et al.	
2008/0088248	A1	4/2008	Myers	
2008/0089053	A1	4/2008	Negley	
2008/0106895	A1	5/2008	Van De Ven et al.	
2008/0106907	A1	5/2008	Trott et al.	
2008/0112168	A1	5/2008	Pickard et al.	
2008/0112170	A1	5/2008	Trott et al.	
2008/0130285	A1	6/2008	Negley et al.	
2008/0136313	A1	6/2008	Van De Ven et al.	
2008/0136770	A1	6/2008	Peker et al.	
2008/0150877	A1	6/2008	Chao et al.	
2008/0198112	A1	8/2008	Roberts	
2008/0259589	A1	10/2008	Van De Ven	
2008/0278097	A1	11/2008	Roberts et al.	
2009/0021471	A1	1/2009	Park et al.	
2009/0066687	A1	3/2009	Oke et al.	
2009/0184666	A1	7/2009	Myers et al.	

FOREIGN PATENT DOCUMENTS

JP	2006-242733	9/1994
JP	10-233669	9/1998
JP	2000 148095 A	5/2000
JP	2007-114628	5/2007
WO	WO 01/63977	8/2001

OTHER PUBLICATIONS

International Search Report and Written Opinion corresponding to International Application No. PCT/US2007/078368; Mailing Date: Jul. 4, 2008.

International Search Report and Written Opinion corresponding to International Application No. PCT/US2007/012708; Mailing Date: Feb. 20, 2008.

International Search Report and Written Opinion corresponding to International Application No. PCT/US2007/001834; Mailing Date: Apr. 28, 2008.

Second Written Opinion corresponding to International Application No. PCT/US2007/001834; Mailing Date: Oct. 20, 2008.

Partial International Search Report corresponding to International Application No. PCT/US2007/078368; Mailing Date: Feb. 5, 2008.

Perduijn, "Light Output Feedback Solution for RGB LED Backlight Applications".

U.S. Appl. No. 61/039,926, filed Mar. 27, 2008.

Communication pursuant to Article 94(3) EPC dated Feb. 7, 2011 corresponding to European Application No. 08 743 161.5; 6 pages.

International Search Report and Written Opinion (15 pages) corresponding to International Application No. PCT/US2008/005145; Mailing Date: Sep. 2, 2008.

2007-114628, Taisuke, Senda May 10, 2007, 12 pages, translation of Detailed Description.

Japanese Office Action dated Jul. 20, 2012 corresponding to Japanese Patent Application No. 2010-507390, 7 pages.

Examination Report dated Jul. 12, 2012 corresponding to European Patent Application No. 08 743 161.5; 5 pages.

* cited by examiner

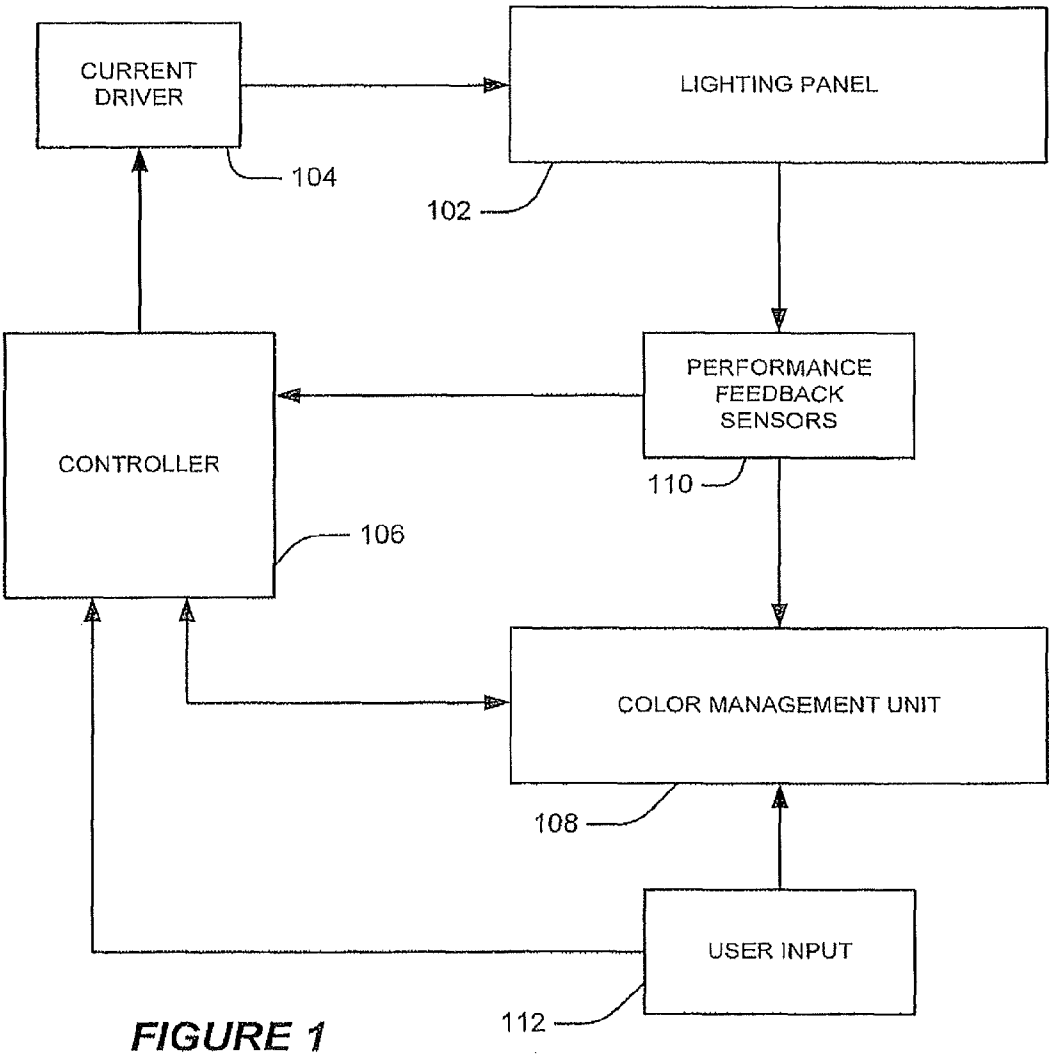
CURRENT DRIVER
LIGHTING PANEL
104
102
PERFORMANCE FEEDBACK SENSORS
CONTROLLER
110
106
COLOR MANAGEMENT UNIT
108
USER INPUT
112

FIGURE 1

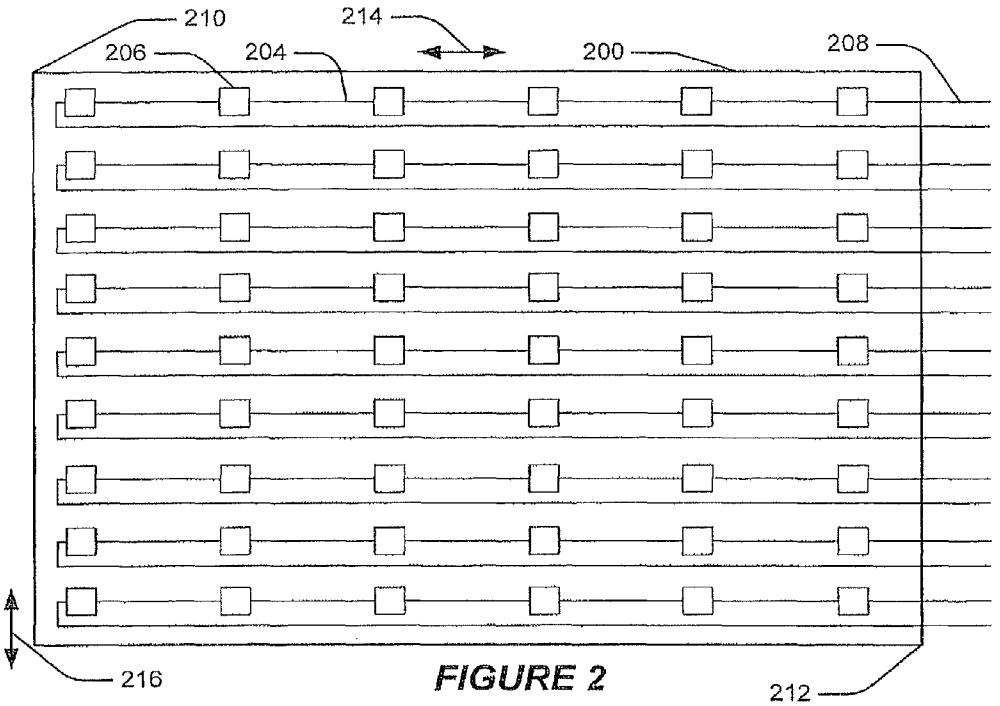

FIGURE 2

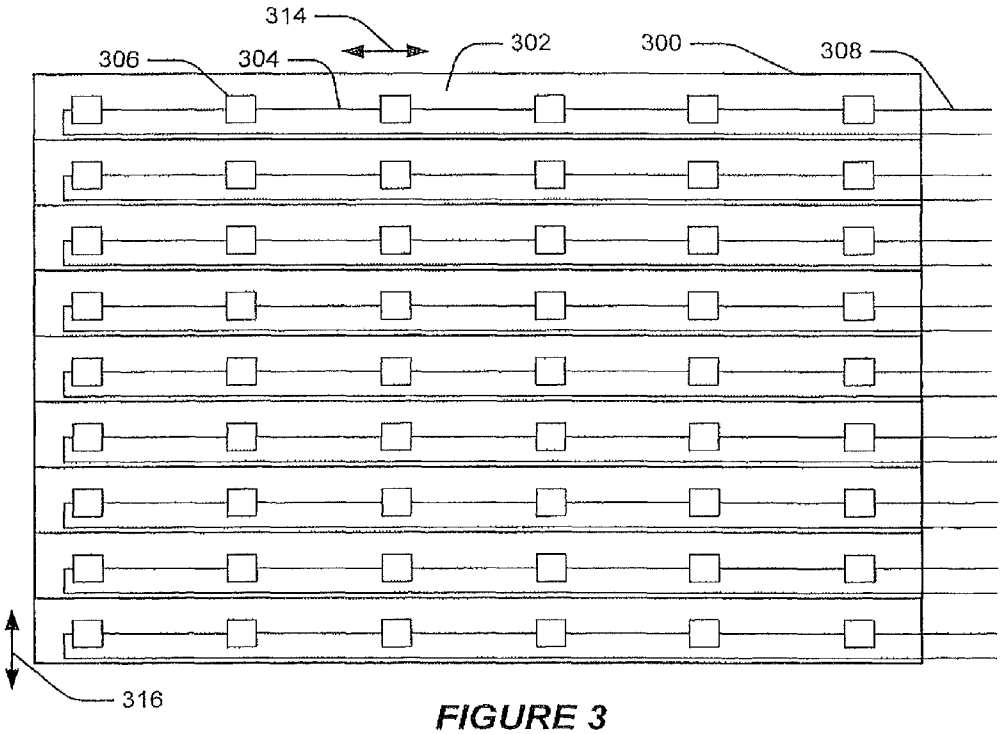

FIGURE 3

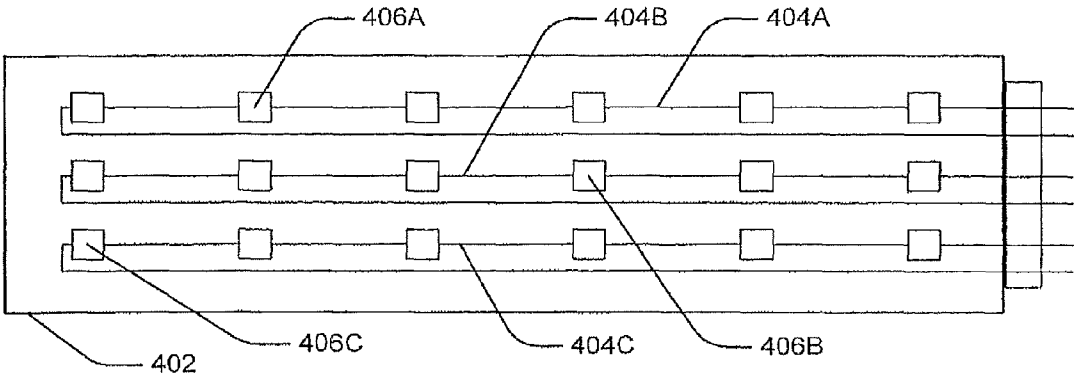

FIGURE 4

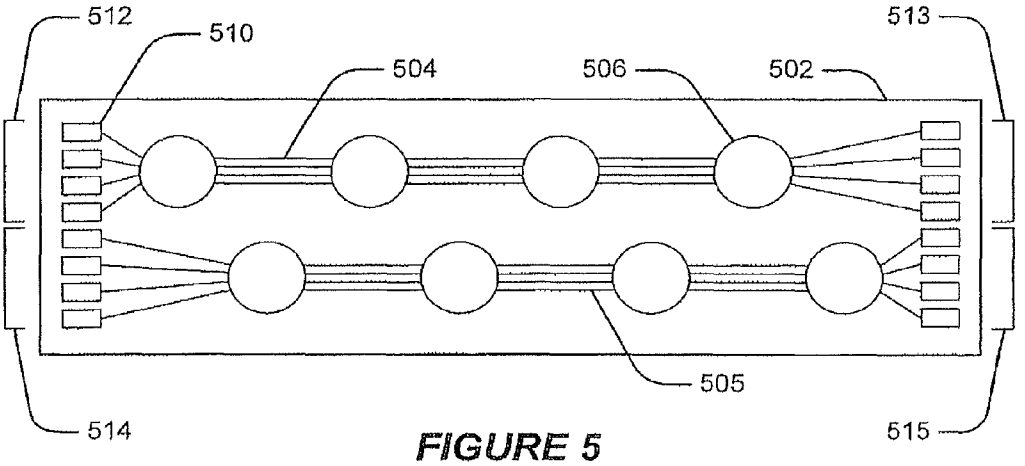

FIGURE 5

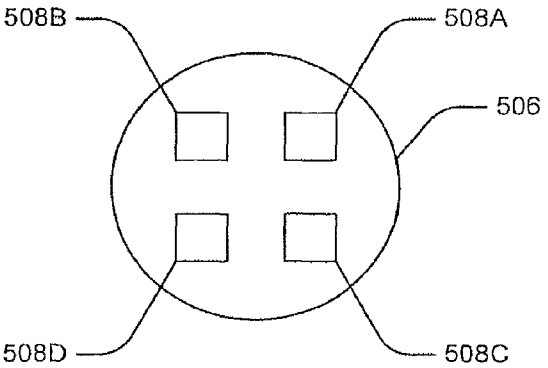

FIGURE 6

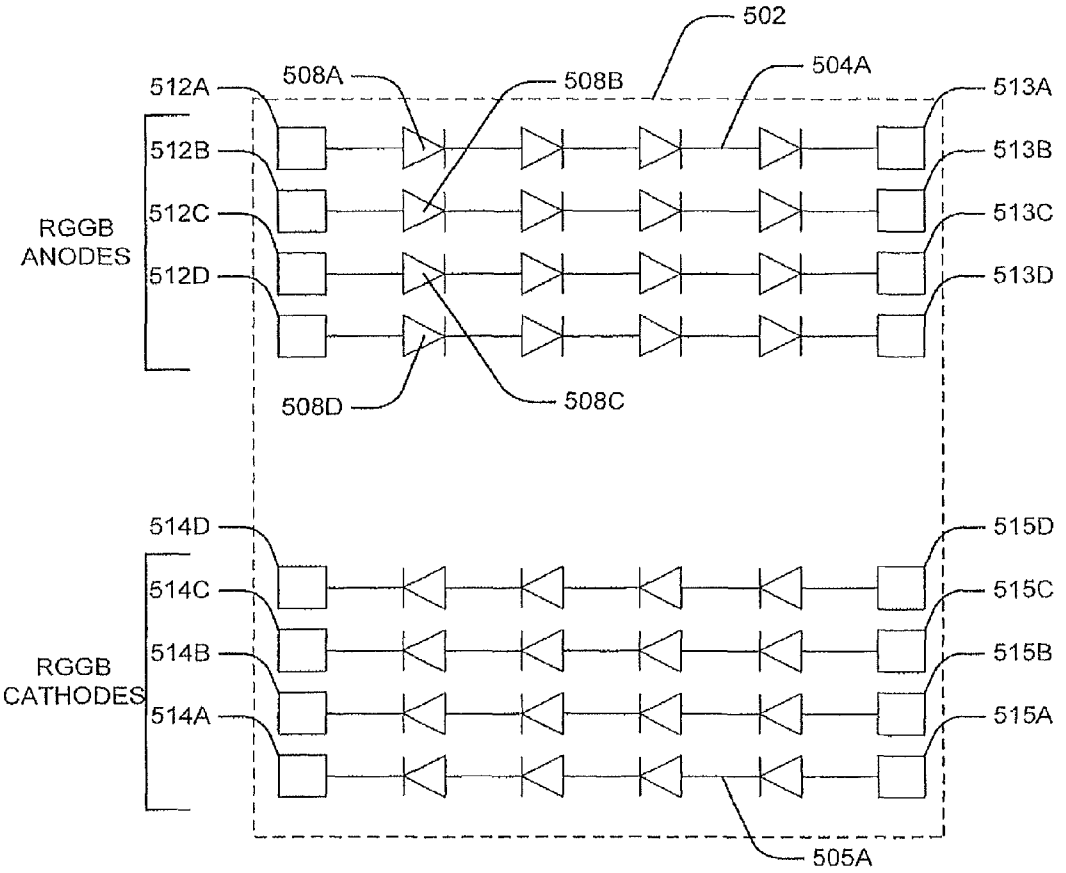
502
504A
508A
508B
508C
508D
512A
512B
512C
512D
RGGB
ANODES
513A
513B
513C
513D
514D
514C
514B
514A
RGGB
CATHODES
515D
515C
515B
515A
505A

FIGURE 7

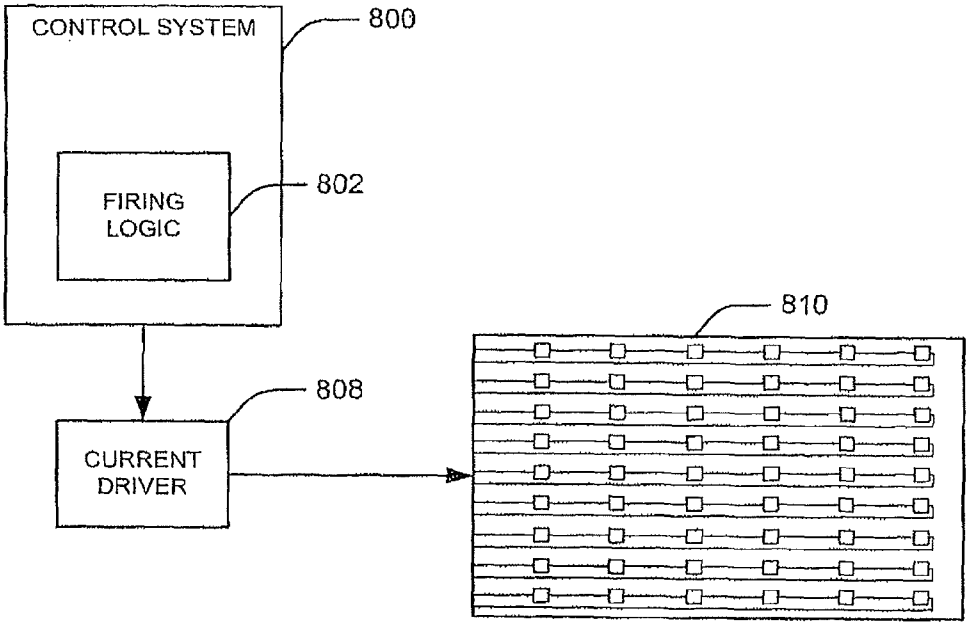

FIGURE 8

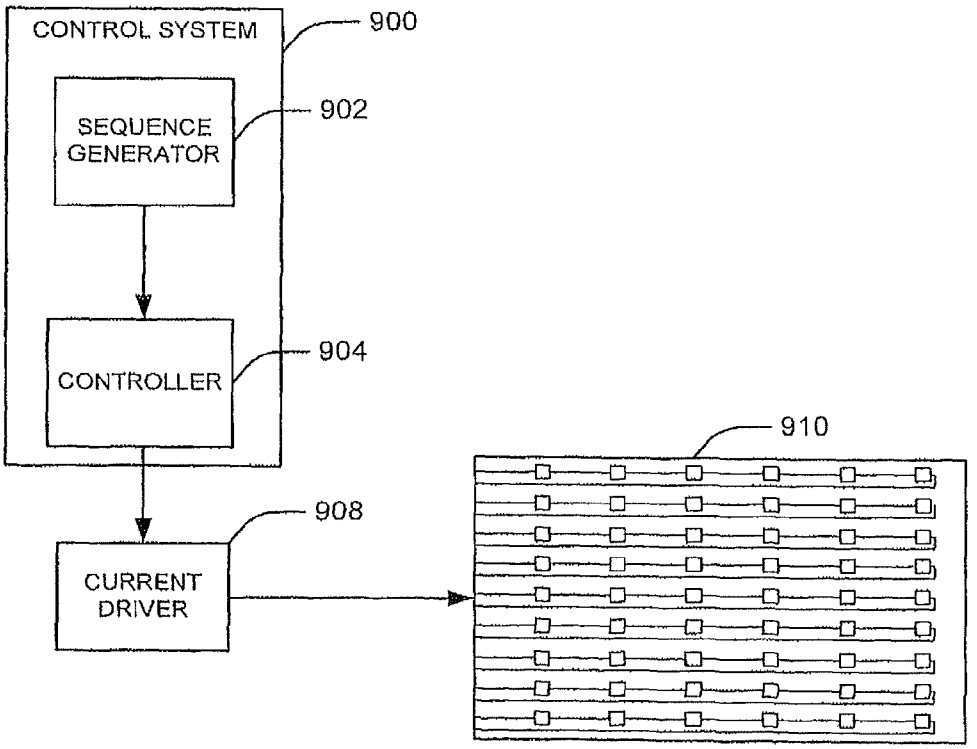

FIGURE 9

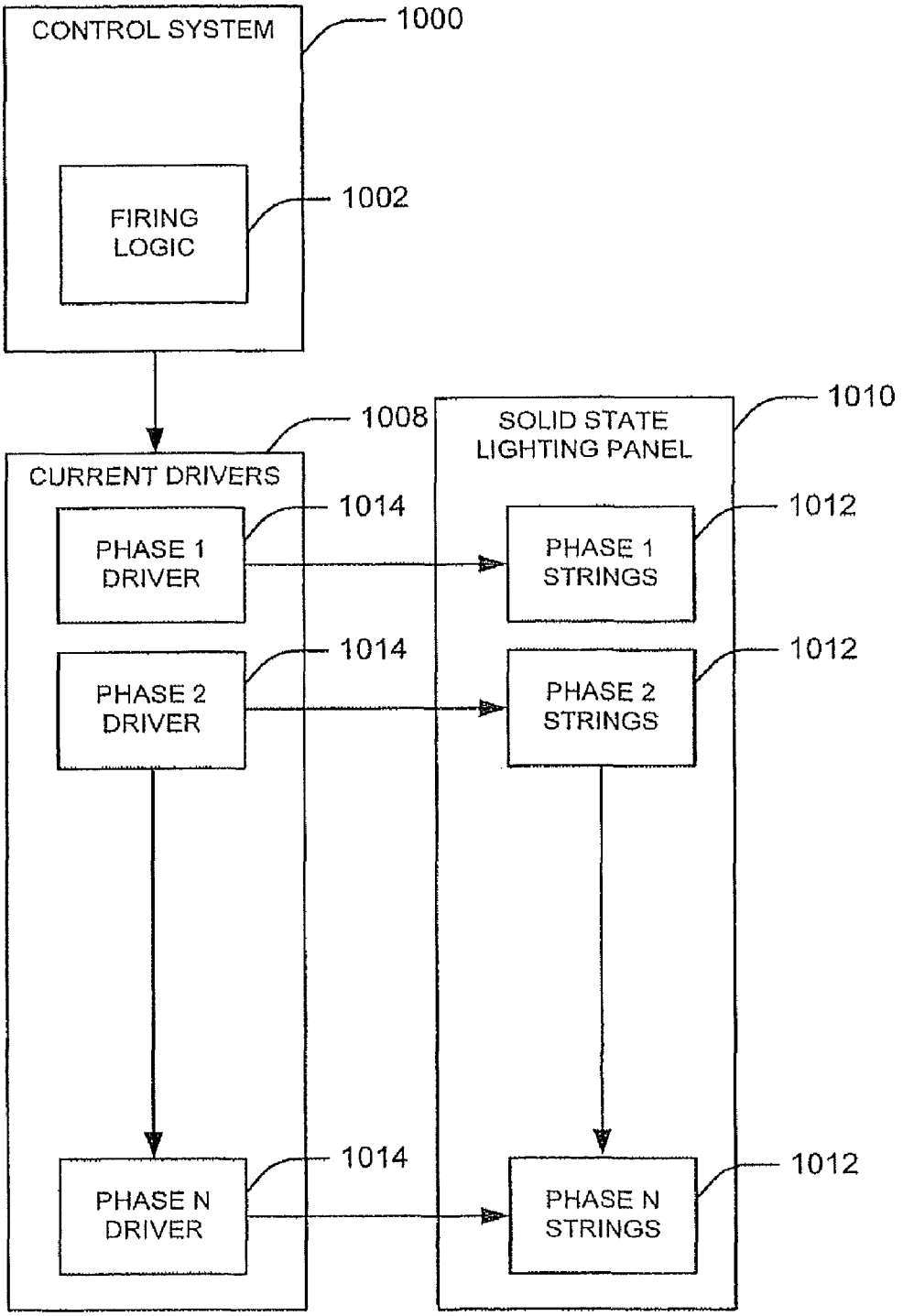
CONTROL SYSTEM
1000
FIRING LOGIC
1002
CURRENT DRIVERS
1008
SOLID STATE LIGHTING PANEL
1010
PHASE 1 DRIVER
1014
PHASE 1 STRINGS
1012
PHASE 2 DRIVER
1014
PHASE 2 STRINGS
1012
PHASE N DRIVER
1014
PHASE N STRINGS
1012

FIGURE 10

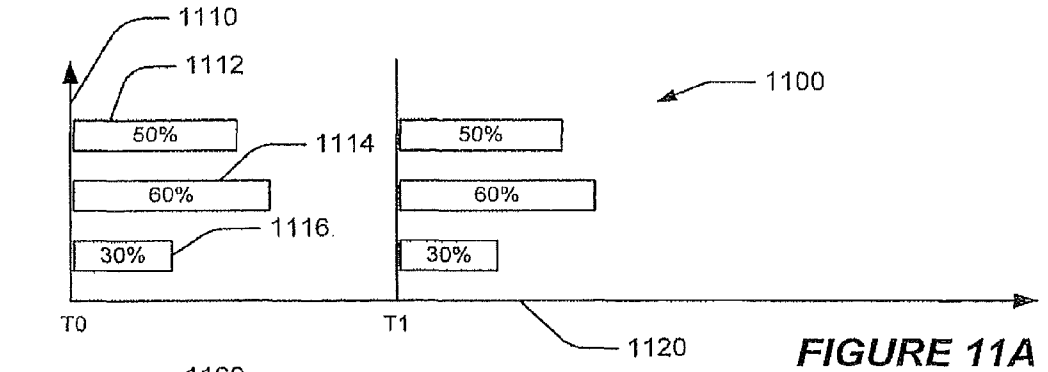

FIGURE 11A

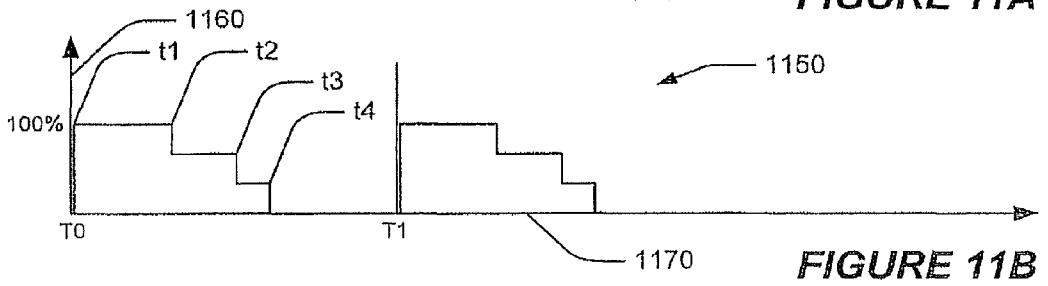

FIGURE 11B

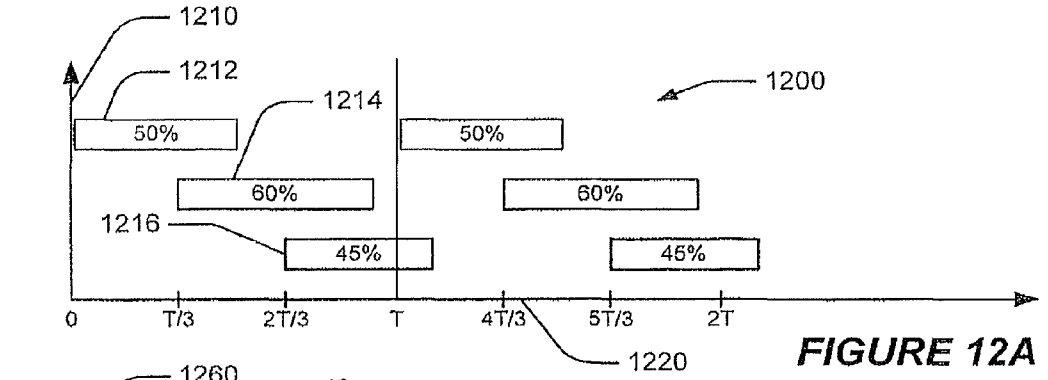

FIGURE 12A

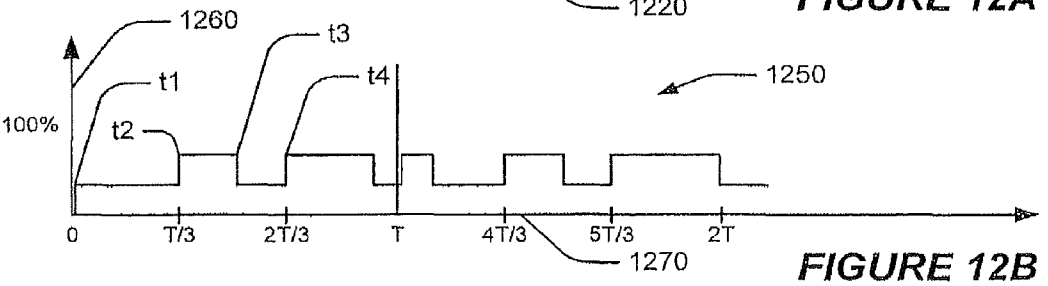

FIGURE 12B

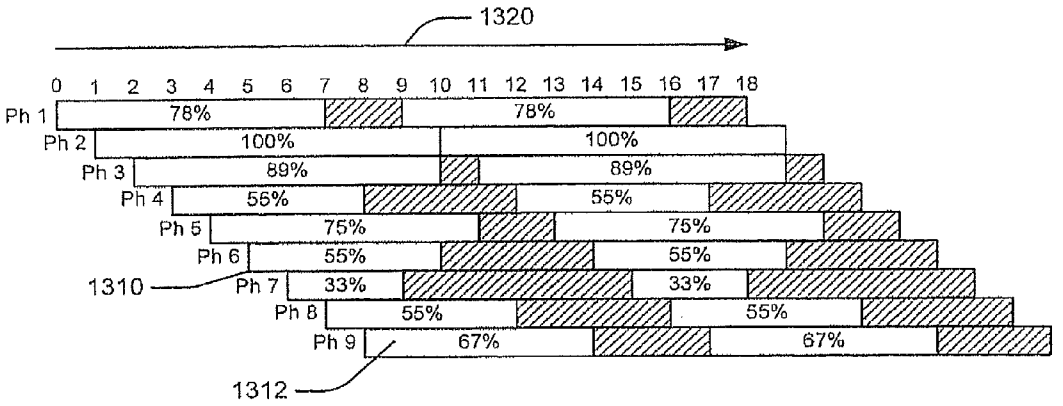

FIGURE 13A

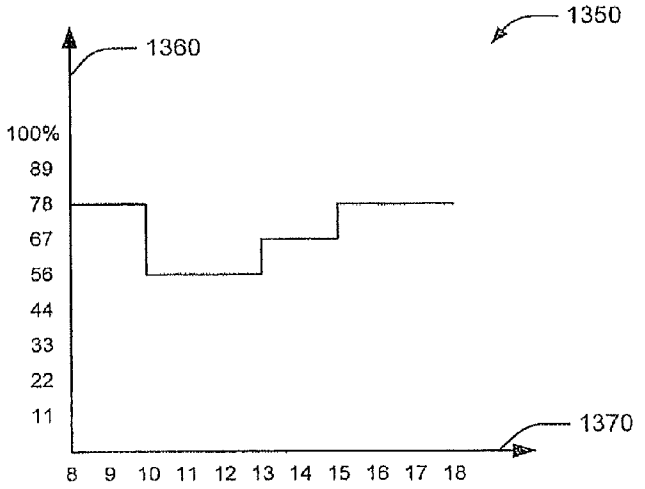

FIGURE 13B

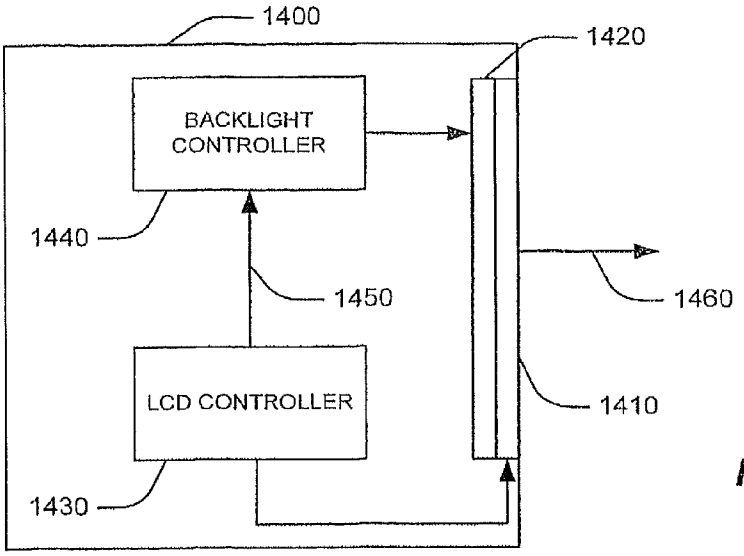

FIGURE 14

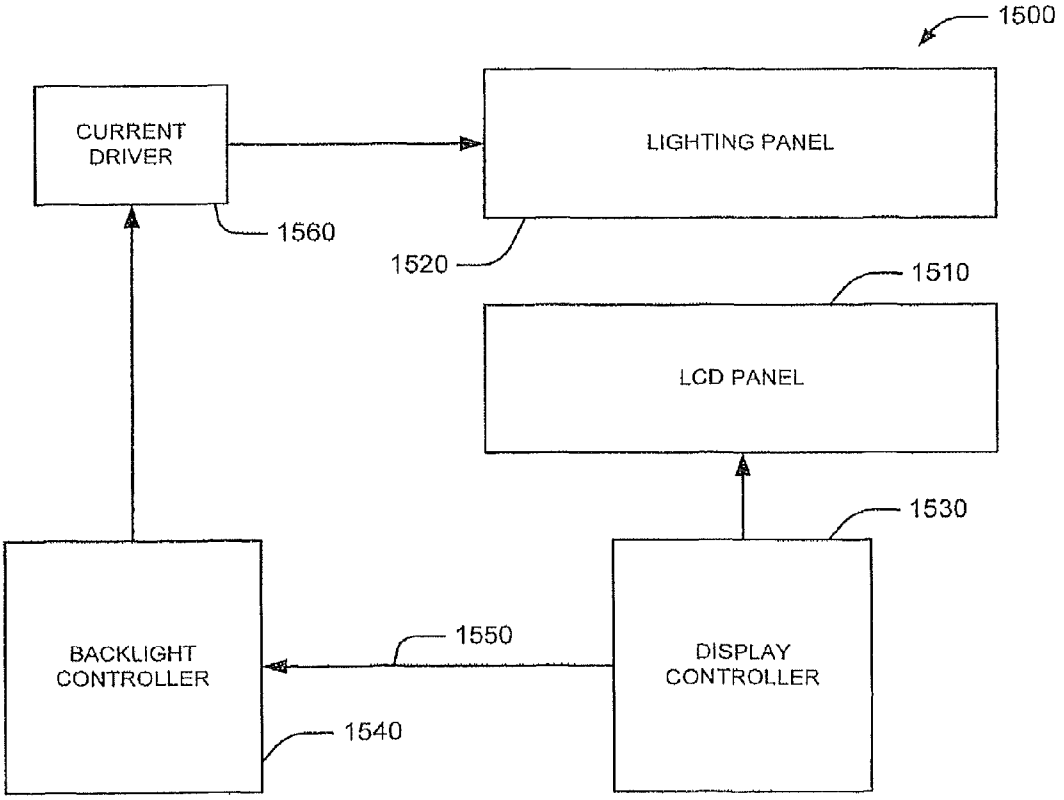

FIGURE 15

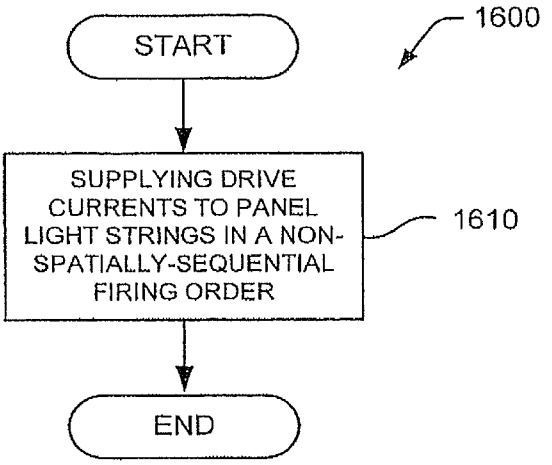

FIGURE 16

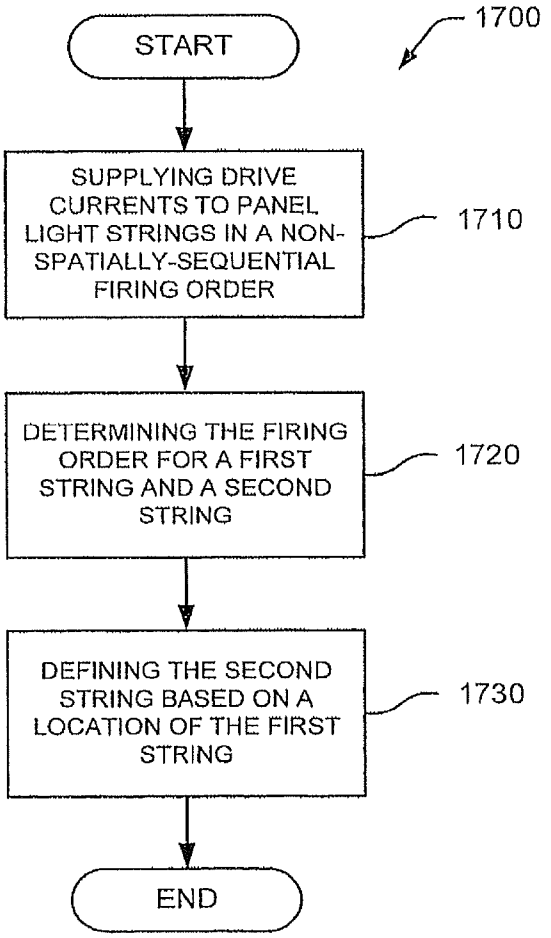

FIGURE 17

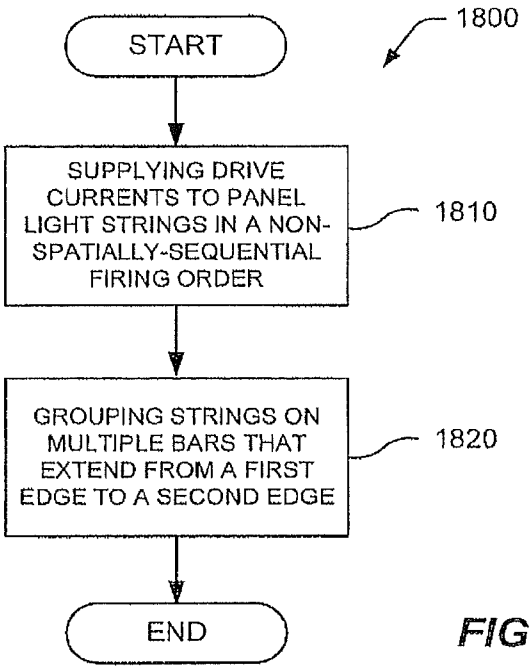

FIGURE 18

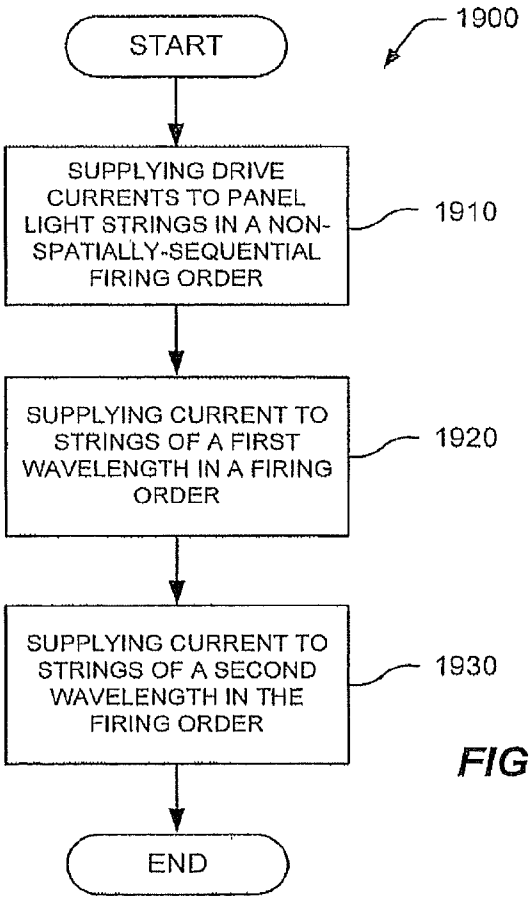

FIGURE 19

2000

COLOR (2010)	FIRING SEQUENCE (2020)	STRING # (TOP TO BOTTOM) (2030)	SPATIAL DELTA FROM PREVIOUS FIRING (2040)
RED	1	4	3
RED	2	7	-5
RED	3	2	6
RED	4	8	-3
RED	5	5	4
RED	6	9	-6
RED	7	3	3
RED	8	6	-5
RED	9	1	3
GREEN	10	4	3
GREEN	11	7	-5
GREEN	12	2	6
GREEN	13	8	-3
GREEN	14	5	4
GREEN	15	9	-6
GREEN	16	3	3
GREEN	17	6	-5
GREEN	18	1	3
BLUE	19	4	3
BLUE	20	7	-5
BLUE	21	2	6
BLUE	22	8	-3
BLUE	23	5	4
BLUE	24	9	-6
BLUE	25	3	3
BLUE	26	6	-5
BLUE	27	1	3

FIGURE 20

SYSTEMS AND METHODS FOR CONTROLLING A SOLID STATE LIGHTING PANEL

RELATED APPLICATIONS

This application is a continuation of U.S. application Ser. No. 11/745,713, filed May 8, 2007 now U.S, Pat. No. 8,049,709, the disclosure of which is hereby incorporated herein by reference as if set forth in their entirety.

FIELD OF THE INVENTION

The present invention relates to solid state lighting, and more particularly, controlling a solid state lighting panel.

BACKGROUND

Solid state lighting arrays are used for a number of lighting applications. For example, solid state lighting panels including arrays of solid state lamps have been used as direct illumination sources, for example, in architectural and/or accent lighting. A solid state lamp may include, for example, a packaged light emitting device including one or more light emitting diodes (LEDs). Inorganic LEDs typically include semiconductor layers forming p-n junctions. Organic LEDs (OLEDs), which include organic light emission layers, are another type of solid state light emitting device. Typically, a solid state light emitting device generates light through the recombination of electronic carriers, i.e. electrons and holes, in a light emitting layer or region.

Solid state lighting panels are commonly used as backlights for small LCD display screens, such as LCD display screens used in portable electronic devices. In addition, there has been increased interest in the use of solid state lighting arrays for backlights of larger displays, such as LCD television displays.

For smaller LCD screens, backlight assemblies typically employ white LED lamps that include a blue-emitting LED coated with a wavelength conversion phosphor that converts some of the blue light emitted by the LED into yellow light. The resulting light, which is a combination of blue light and yellow light, may appear white to an observer. However, while light generated by such an arrangement may appear white, objects illuminated by such light may not appear to have a natural coloring, because of the limited spectrum of the light. For example, because the light may have little energy in the red portion of the visible spectrum, red colors in an object may not be illuminated well by such light. As a result, the object may appear to have an unnatural coloring when viewed under such a light source.

The color rendering index of a light source is an objective measure of the ability of the light generated by the source to accurately illuminate a broad range of colors. The color rendering index ranges from essentially zero for monochromatic sources to nearly 100 for incandescent sources. Light generated from a phosphor-based solid state light source may have a relatively low color rendering index.

For large-scale backlight and illumination applications, it is often desirable to provide a lighting source that generates a white light having a high color rendering index, so that objects and/or display screens illuminated by the lighting panel may appear more natural. Accordingly, such lighting sources may typically include an array of solid state lamps including red, green and blue light emitting devices. When red, green and blue light emitting devices are energized simultaneously, the resulting combined light may appear

white, or nearly white, depending on the relative intensities of the red, green and blue sources. There are many different hues of light that may be considered "white." For example, some "white" light, such as light generated by sodium vapor lamps, may appear more yellowish, while other "white" light, such as light generated by some fluorescent lamps, may appear more bluish in color.

Solid state lamps, such as LED's, are current-controlled devices in the sense that the intensity of the light emitted from an LED is related to the amount of current driven through the LED. One common method for controlling the current driven through the solid state lamps to achieve desired intensity and color mixing is a Pulse Width Modulation (PWM) scheme. PWM schemes pulse the solid state lamps alternately to a full current "ON" state followed by a zero current "OFF" state. However, firing all of the solid state lamps simultaneously may result in undesirable electrical power system performance due, for example, to power factor spikes and/or electromagnetic interference due to the associated current rush. Sequentially firing the strings independently and/or in combinations without regard to relative string location within the display, however, can produce undesirable display characteristics.

SUMMARY

In some embodiments, the control system may include firing logic that may determine a firing order of the multiple strings. In some embodiments, the control system may be configured to drive the multiple strings or portions thereof in a spatially non-adjacent, non-sequential or spatially random firing order. In some embodiments, the control system may be configured to drive the multiple strings or portions thereof at different times and/or phases for at least some of the multiple strings or portions thereof. In some embodiments, the control system is configured to drive the multiple strings and/or portions thereof at least partially based on the spatial relationship between the multiple strings or portions thereof and at different phases for at least some of the multiple strings or portions thereof. In some embodiments, the firing logic may include rule-based logic that may operate to generate a non-spatially-sequential firing order. In some embodiments, the rule-based logic may include a rule that a second string fired after a first string is non-adjacent the first string. In some embodiments, the rule-based logic may further include a rule that a first string is fired simultaneously with a second string and the first string is non-adjacent the second string.

A lighting panel system includes multiple strings of solid state lighting devices arranged linearly across the panel in a first direction and positioned at intervals in a second direction that is substantially orthogonal to the first direction. The system also includes a current supply circuit that can selectively supply multiple on-state drive currents to the multiple strings in response to control signals. The system further includes a control system that can selectively provide control signals to the current supply circuit to selectively drive the multiple strings. The control system can include firing logic that can determine a firing order of the multiple strings.

In other embodiments, the firing logic can include rule-based logic that can operate to generate a non-spatially-sequential firing order. The rule-based logic can include a rule that a second string fired after a first string is non-adjacent the first string. The rule-based logic can also include a rule that a first string is fired simultaneously with a second string and the first string is non-adjacent the second string.

In further embodiments, the lighting panel can include multiple bars that extend across the panel in the first direction

and are positioned adjacent one another in a substantially parallel arrangement, such that the bars each include some of the multiple strings. In some embodiments, the firing order can cause a first firing, a second firing and a third firing, which each can supply current in a string in each of the first bar, the second bar, and the third bar, where the second bar is below the first bar and the third bar is above the second bar. In other embodiments, first and second portions of the strings can include solid state lighting devices that emit light in a first dominant wavelength and a second dominant wavelength, respectively, where each of the bars includes at least one string of the first portion and at least one string of the second portion and the strings in the first portion are fired in the firing order and then the strings in the second portion are fired in the firing order. In yet other embodiments, at least one string of the first portion can be fired simultaneously with at least one string from the second portion.

Other embodiments can include a first portion of strings in a first bar and a second portion of strings in a second bar where the first and second portions are fired sequentially in the firing order and the firing order determines the location of the second bar in response to the location of the first bar.

In further embodiments, a first portion of the strings includes solid state lighting devices that emit light in a first dominant wavelength and a second portion of strings includes solid state lighting devices that emit light in a second dominant wavelength, where the first portion is fired in the firing order and then the second portion is fired in the firing order.

In yet further embodiments, the firing logic can be random logic that can operate to generate the firing order.

In other embodiments, a means for generating a feedback signal is included to provide display performance information to the control system.

Some embodiments can include methods of controlling a solid state lighting panel having multiple strings of solid state lighting devices configured to extend from a first edge of the panel to a second edge of the panel in substantially adjacent positions relative to one another. Such methods can include supplying pulsed drive currents to the strings in a non-spatially-sequential firing order.

In some embodiments, the firing order can be determined to supply current to a first string and second string, where the second string can be defined based on the location of the first string. In some embodiments, the second string can be defined by selecting a string that is non-adjacent the first string and/or selecting a string that is located a minimum quantity of strings from the first string. In other embodiments, a third string that is fired after the second string can be defined based on the locations of the first and second strings. In some other embodiments, the second string can be defined by selecting a string on a first side of the first string and the third string can be defined by selecting a string on a second side of the second string.

In further embodiments, multiple portions of the strings can be grouped on multiple bars that can extend across the panel from the first edge to the second edge and that are positioned adjacent one another in a substantially parallel arrangement. In yet further embodiments, the portion of strings in the same bar can be supplied current simultaneously. In other embodiments, a random number can be generated, a value can be assigned to each bar and current can be supplied to the portion of strings on a bar based on the random number.

In yet other embodiments, a first portion of strings that includes solid state lighting devices configured to emit light in a first dominant wavelength can be supplied current according to the firing order and then a second portion of strings that includes solid state lighting devices configured to emit light in a second dominant wavelength can be supplied current according to the firing order.

In further embodiments, defining the second string and/or third string can be based on a dominant wavelength emitted by the solid state lighting devices in the first string.

In yet further embodiments, a first string having solid state lighting devices configured to emit light in a first dominant wavelength and a second string having solid state lighting devices configured to emit light in a second dominant wavelength can be simultaneously supplied current.

Other embodiments can include determining the firing order that supplies current to a first string and a second string and defining the second string based on a dominant wavelength of the first string and a relative position of the first string.

Yet other embodiments can include defining the firing order using numerical techniques. Using a numerical technique in some embodiments can include generating a random number, assigning a value to each of the strings and supplying current to one of the strings based on the value of the random number. In some other embodiments, using a numerical technique can include performing a non-linear calculation.

In further embodiments, the firing order can include using a deterministic order based on at least one rule.

A lighting panel system that includes multiple strings of solid state lighting devices that are arranged to extend across the panel in a first direction and are positioned adjacent one another in a second direction and that are supplied current by multiple current drivers can also include a controller that provides control signals to the current drivers and a sequence generator that generates a firing sequence for firing the multiple strings.

In some embodiments, the sequence generator can include a deterministic algorithm that determines a location of a subsequently fired string from the location of a previously fired string.

In other embodiments, the sequence generator can include an algorithm that generates a firing sequence to fire a first string having solid state lighting devices that emit light in a first dominant wavelength and a second string having solid state lighting devices that emit light in a second dominant wavelength, where the second string is fired after the first string.

In yet other embodiments, the sequence generator can include an algorithm that generates a sequence to simultaneously fire a first string having solid state lighting devices that emit light in a first dominant wavelength and a second string having solid state lighting devices that emit light in a second dominant wavelength.

In further embodiments, the sequence generator can generate a random sequence of firing.

Yet further embodiments can include bars that include portions of the strings and extend across the panel in the first direction and are positioned adjacent one another in the second direction. Some embodiments can include a firing sequence that is configured to simultaneously fire a first portion of the strings and then a second portion of the strings where the first portion is located on a first bar and the second portion is located on a second bar. Other embodiments can include a firing sequence that simultaneously fires a first string on a first bar and a second string on a second bar. In some embodiments the first string can include solid state lighting devices that emit light in a first dominant wavelength and the second string can include solid state lighting devices that emit light in a second dominant wavelength.

Yet other embodiments can include a first portion of strings that include solid state lighting devices that emit light in a first dominant wavelength and a second portion of the strings that include solid state lighting devices that emit light in a second dominant wavelength where each of the bars includes at least one string of the first portion of strings and at least one string from the second portion of strings. In further embodiments, the firing sequence can be operative to cause the first portion of strings to fire in a first sequence and then to cause the second portion of strings to fire in the first sequence.

BRIEF DESCRIPTION OF THE DRAWINGS

The accompanying drawings, which are included to provide a further understanding of the invention and are incorporated in and constitute a part of this application, illustrate certain embodiment(s) of the invention.

FIG. **1** is a block diagram illustrating an overview of systems and methods for controlling a solid state lighting panel in accordance with some embodiments of the invention.

FIG. **2** is a block diagram illustrating a front view of a solid state lighting panel according to some embodiments of the invention.

FIG. **3** is a block diagram illustrating a front view of a solid state lighting panel having lighting bars according to some embodiments of the invention.

FIG. **4** is a block diagram illustrating a front view of a lighting bar as illustrated in FIG. **3** according to some embodiments of the invention.

FIG. **5** is a block diagram illustrating a lighting tile according to some embodiments of the invention.

FIG. **6** is a block diagram illustrating a light emitter cluster according to some embodiments of the invention.

FIG. **7** is a schematic diagram of a lighting tile illustrated in FIG. **5** according to some embodiments of the invention.

FIG. **8** is a block diagram illustrating systems and methods for controlling a solid state lighting panel in accordance with some embodiments of the invention.

FIG. **9** is a block diagram illustrating systems and methods for controlling a solid state lighting panel in accordance with other embodiments of the invention.

FIG. **10** is a block diagram illustrating systems and methods for controlling a solid state lighting panel using a multiple phase power supply in accordance with some embodiments of the invention.

FIGS. **11**A and **11**B illustrate a timing diagram and a corresponding graph of a dynamic power load, respectively, for systems and methods of using a single phase power supply for controlling a solid state lighting panel in accordance with some embodiments of the invention.

FIGS. **12**A and **12**B illustrate a timing diagram and a corresponding graph of a dynamic power load, respectively, for systems and methods of using a multiple phase power supply for controlling a solid state lighting panel in accordance with some embodiments of the invention.

FIGS. **13**A and **13**B illustrate a timing diagram and a corresponding graph of a dynamic power load, respectively, for systems and methods of using a multiple phase power supply for controlling a solid state lighting panel in accordance with some embodiments of the invention.

FIG. **14** is a block diagram illustrating systems and methods for controlling a solid state lighting panel synchronized with an LCD display in accordance with other embodiments of the invention.

FIG. **15** is a flow diagram illustrating operations for controlling a solid state lighting panel synchronized with an LCD display in accordance with other embodiments of the invention.

FIG. **16** is a flow diagram illustrating operations for controlling a solid state lighting panel according to some embodiments of the invention.

FIG. **17** is a flow diagram illustrating operations for controlling a solid state lighting panel according to other embodiments of the invention.

FIG. **18** is a flow diagram illustrating operations for controlling a solid state lighting panel according to further embodiments of the invention.

FIG. **19** is a flow diagram illustrating operations for controlling a solid state lighting panel according to yet further embodiments of the invention.

FIG. **20** is a table illustrating an exemplary string firing sequence according to some embodiments of the invention.

DETAILED DESCRIPTION OF EMBODIMENTS OF THE INVENTION

Embodiments of the present invention now will be described more fully hereinafter with reference to the accompanying drawings, in which embodiments of the invention are shown. This invention may, however, be embodied in many different forms and should not be construed as limited to the embodiments set forth herein. Rather, these embodiments are provided so that this disclosure will be thorough and complete, and will fully convey the scope of the invention to those skilled in the art. Like numbers refer to like elements throughout.

It will be understood that, although the terms first, second, etc. may be used herein to describe various elements, these elements should not be limited by these terms. These terms are only used to distinguish one element from another. For example, a first element could be termed a second element, and, similarly, a second element could be termed a first element, without departing from the scope of the present invention. As used herein, the term "and/or" includes any and all combinations of one or more of the associated listed items.

It will be understood that when an element such as a layer, region or substrate is referred to as being "on" or extending "onto" another element, it can be directly on or extend directly onto the other element or intervening elements may also be present. In contrast, when an element is referred to as being "directly on" or extending "directly onto" another element, there are no intervening elements present. It will also be understood that when an element is referred to as being "connected" or "coupled" to another element, it can be directly connected or coupled to the other element or intervening elements may be present. In contrast, when an element is referred to as being "directly connected" or "directly coupled" to another element, there are no intervening elements present. It will also be understood that when a first element, operation, signal, and/or value is referred to as "responsive to" another element, condition, signal and/or value, the first element, condition, signal, and/or value can exist and/or operate completely responsive to or partially responsive to the other element, condition, signal, and/or value.

The terminology used herein is for the purpose of describing particular embodiments only and is not intended to be limiting of the invention. As used herein, the singular forms "a", "an" and "the" are intended to include the plural forms as well, unless the context clearly indicates otherwise. It will be further understood that the terms "comprises" "comprising,"

"includes" and/or "including" when used herein, specify the presence of stated features, integers, steps, operations, elements, and/or components, but do not preclude the presence or addition of one or more other features, integers, steps, operations, elements, components, and/or groups thereof.

Unless otherwise defined, all terms (including technical and scientific terms) used herein have the same meaning as commonly understood by one of ordinary skill in the art to which this invention belongs. It will be further understood that terms used herein should be interpreted as having a meaning that is consistent with their meaning in the context of this specification and the relevant art and will not be interpreted in an idealized or overly formal sense unless expressly so defined herein.

The present invention is described below with reference to flowchart illustrations and/or block diagrams of methods, systems and computer program products according to embodiments of the invention. It will be understood that some blocks of the flowchart illustrations and/or block diagrams, and combinations of some blocks in the flowchart illustrations and/or block diagrams, can be implemented by computer program instructions. These computer program instructions may be stored or implemented in a microcontroller, microprocessor, digital signal processor (DSP), field programmable gate array (FPGA), a state machine, programmable logic controller (PLC) or other processing circuit, general purpose computer, special purpose computer, or other programmable data processing apparatus such as to produce a machine, such that the instructions, which execute via the processor of the computer or other programmable data processing apparatus, create means for implementing the functions/acts specified in the flowchart and/or block diagram block or blocks.

These computer program instructions may also be stored in a computer readable memory that can direct a computer or other programmable data processing apparatus to function in a particular manner, such that the instructions stored in the computer readable memory produce an article of manufacture including instruction means which implement the function/act specified in the flowchart and/or block diagram block or blocks.

The computer program instructions may also be loaded onto a computer or other programmable data processing apparatus to cause a series of operational steps to be performed on the computer or other programmable apparatus to produce a computer implemented process such that the instructions which execute on the computer or other programmable apparatus provide steps for implementing the functions/acts specified in the flowchart and/or block diagram block or blocks. It is to be understood that the functions/acts noted in the blocks may occur out of the order noted in the operational illustrations. For example, two blocks shown in succession may in fact be executed substantially concurrently or the blocks may sometimes be executed in the reverse order, depending upon the functionality/acts involved. Although some of the diagrams include arrows on communication paths to show a primary direction of communication, it is to be understood that communication may occur in the opposite direction to the depicted arrows.

Some embodiments of the invention may arise from the recognition that where emitter strings in a panel are fired in a spatially sequential order, a noticeable "sweep" or "waterfall" across the display may result. This effect can be more exaggerated at a beat frequency that is related to the difference between the refresh frequency of the panel and the pulse-width-modulation (PWM) frequency of a pulse-width modulation signal used to adjust the brightness of the display. Accordingly, some embodiments establish a non-spatially sequential firing order to avoid or reduce the formation of a "sweep" across the panel. A lighting panel system can utilize a control system that selectively provides control signals to selectively drive the strings in the panel. Some embodiments can use firing logic to determine a firing order in a deterministic manner. Other embodiments can include a sequence generator that generates a firing sequence. Some embodiments can include a polyphase power supply configured to provide power to emitter strings in a temporally distributed manner. Some embodiments include receiving a synchronizing signal from a display controller. Moreover, in some embodiments, the subsequent firing of a string can be determined by the location and/or dominant wavelength of a previously fired string. In this manner, a noticeable "sweep" effect can be reduced.

Reference is now made to FIG. **1**, which is a block diagram illustrating a high level view of systems and methods for controlling a solid state lighting panel in accordance with some embodiments of the invention. A solid state lighting panel **102** can be driven by a current driver **104** that is configured to provide current to light emitting devices in the lighting panel **102**. Control of the display can be achieved by controlling the current provided by the current driver **104**, which is responsive to control signals generated by a controller **106**. The controller **106**, in conjunction with a color management unit **108**, can perform the processing tasks necessary to generate the control signals for the current driver **104**. The color management unit **108** and/or the controller **106** can use, for example, performance data from display performance feedback sensors **110** and user input **112** to achieve the desired display performance.

Reference is now made to FIG. **2**, which is a block diagram illustrating a front view of a solid state lighting panel **200** according to some embodiments of the invention. The lighting panel **200** includes multiple strings **204** of solid state lighting devices **206**. Although discussed in the context of strings **204**, embodiments of the systems and methods herein may include firing modules and/or groups of modules of solid state lighting devices **206** that are not arranged as strings. In some embodiments, a string **204** may be defined by the electrical and/or the spatial relationship between the solid state lighting devices **206** therein. The strings **204** can be generally arranged to extend across the panel **200** in a first direction **214** from a first edge **210** to a second edge **212**. The strings **204** can be positioned at intervals along a second direction **216**. In some embodiments the strings **204** can be positioned substantially parallel to one another. In some other embodiments the first direction **214** can be substantially orthogonal to the second direction **216**. The strings **204** can include electrical connection components **208** for providing electrical connectivity to an electrical power source. In some embodiments, the solid state lighting devices **206** are connected in an electrical series configuration to form each string **204**. The electrical series configuration permits the solid state lighting devices in any string to be controlled together through electrical current regulation. Although not shown, some embodiments can include strings **204**, or portions thereof, having solid state lighting devices **206** that are connected in an electrically parallel configuration where the string **204** can be controlled through, for example, voltage regulation.

Reference is now made to FIG. **3**, which is a block diagram illustrating a front view of a solid state lighting panel **300** having bars **302** according to some embodiments of the invention. In some embodiments, the bars **302** can extend across the panel **300** in a first direction **314** and be positioned adjacent one another in a second direction **316**. Each bar **302** can

include one or more strings **304** of solid state lighting devices **306** that can be, for example, connected in series. The strings **304** can include electrical connection components **308** for providing electrical connectivity to an electrical power source. The electrical power source can be current and/or voltage regulated, depending on the configuration of the strings. A solid state lighting panel of some embodiments can include bars **302** that are vertically oriented and/or arranged in a variety of row and column configurations. Moreover, bars can be configured in a combination of different sizes and/or shapes within the same panel **300**.

Reference is now made to FIG. **4**, which is a block diagram illustrating a front view of a bar **402** according to some embodiments of the invention. In some embodiments, a bar **402** can include multiple strings **404**A-C that can each include multiple solid state lighting devices **406**A-C. Each string **404** can be configured to be substantially the same or each one can differ in one or more ways. In some embodiments, each string **404**A-C includes solid state lighting devices **406**A-C that emit light in a different dominant wavelength. For example, solid state lighting devices **406**A can be configured to emit light having a dominant wavelength generally corresponding to the color red. Similarly, solid state lighting devices **406**B and **406**C can be configured to emit light having dominant wavelengths corresponding to the colors green and blue, respectively. A bar **402** of some embodiments can include one and/or more strings **404** having solid state lighting devices **406** of different colors. For example, a bar **402** can include at least one string **404** having red solid state lighting devices, at least one string **404** having green solid state lighting devices, and at least one string **404** having blue solid state lighting devices. In this manner, by selectively controlling the amount and/or duty cycle of current supplied to each string, the color hue and/or brightness of the light emitted by the bar can be controlled. The strings **404**A-C can be controlled independent of one another or as a group corresponding to the bar **402**. Although discussed with reference to solid state lighting devices configured to emit light having different dominant wavelengths, the systems and methods herein may also be utilized in systems using solid state lighting devices configured to emit light in a single dominant wavelength. Furthermore, systems, etc., may use solid state LED's including phosphors that, when energized, emit light having multiple wavelengths and/or that otherwise emit broad spectrum light. such as, for example, a phosphor coated blue LED.

Reference is now made to FIG. **5**, which is a block diagram illustrating a tile **502** according to some embodiments of the invention. Multiple tiles **502** can be connected to form a bar. The tile **502** can include a first group of strings **504** and a second group of strings **505**, each including multiple light emitter clusters **506**. As illustrated in FIG. **6**, which is a block diagram illustrating a light emitter cluster **506** according to some embodiments of the invention, a light emitter cluster **506** can include multiple solid state light emitters **508**A-D. The solid state light emitters **508**A-D can each emit light in a different dominant wavelength. For example, the solid state emitter cluster **506** can include a red emitter **508**A, a first green emitter **508**B, a second green emitter **508**C and a blue emitter **508**D. other colors of emitters and/or color combinations may be used.

As illustrated in FIG. **5**, current can be conducted to the strings through contacts **510**. For example, any one or more of the first group of strings can be fired through the first group supply current contacts **512** and the first group return current contacts **513**. Similarly, any one or more of the second group of strings **505** can be fired through the second group supply current contacts **515** and the second group return current contacts **514**.

Reference is now made to FIG. **7**, which is a schematic diagram of a tile as discussed above regarding FIG. **5** according to some embodiments of the invention. The tile **502** includes the first group of strings **504**A-D having corresponding current supply and return contacts **512**A-D and **513**A-D, respectively. Each string **504** can include solid state lighting devices **508** configured to emit light in a dominant wavelength. For example, string **504**A can include red emitters **508**A. Other strings can include emitters configured to emit light in different dominant wavelengths or colors. In some embodiments a group of strings **504** can include one or more strings having red emitters **508**A, one or more strings having green emitters **508**B, **508**C, and one or more strings having blue emitters **508**D. In some embodiments, the first group of strings **504** can be arranged to include the emitter string anodes **512** on the same side of the bar **502** as the emitter string cathodes **514** of the second group of strings **505**.

Reference is now made to FIG. **8**, which is a block diagram illustrating systems and/or methods for controlling a solid state lighting panel in accordance with some embodiments of the invention. A control system **800** selectively provides control signals to a current driver **808** or other type of electrical power supply circuit that responsively drives multiple solid state lighting devices in a solid state lighting panel **810**. The control system **800** can include firing logic **802** that can determine a firing order for the multiple strings. A firing order may determine an order in which individual strings of solid state lighting devices and/or groups of strings of solid state lighting devices are supplied current. In some embodiments, the firing order may determine the order in which strings are fired within a single phase of a power supply. In the single phase context, the temporal delay between firing consecutively fired strings may be on the order of, for example, several microseconds. In some embodiments, the firing order may determine the firing order of strings supplied power from different phases of a polyphase power supply. In the polyphase context, the temporal delay between firing strings using consecutive power supply phases may be on the order of for example, milliseconds.

One common method for controlling the current driven through the strings is a Pulse Width Modulation (PWM) scheme. PWM schemes pulse the solid state lamps alternately to a full current "ON" state followed by a zero current "OFF" state. The output of the string may be controlled by varying the duty cycle, which is the percent of the cycle that the string is placed in an "ON" state.

In some embodiments, the firing logic **802** can include rule-based logic that can generate a non-spatially-sequential firing order. For example, the rule based logic may include a rule that a second string fired after a first string is not adjacent the first string in the panel **810**. In some embodiments, a rule may be that the first and second strings can be fired simultaneously and are not adjacent one another.

In some embodiments, the solid state lighting panel **810** can also include multiple bars, as discussed above regarding FIG. **3**, that can extend across the panel in a first direction and that can be positioned adjacent one another in a substantially parallel arrangement. The firing order can be operative to fire different strings based on the location of the bar that the strings are in. For example, the firing order may be such that each subsequently fired string is located in a bar on a different side of the previously fired string. For example, where first, second, and third strings are fired sequentially, the second

string can be in a bar below that of the first string and the third string can be in a bar above that of the second string.

The panel **810** of some embodiments can include different portions of the strings that include solid state lighting devices that emit light in different dominant wavelengths. Some embodiments include at least one string of each dominant wavelength in each of the bars. The strings of a first dominant wavelength can be fired in the firing order and then the strings of a second dominant wavelength can be fired in the firing order. The firing order can be repeated for each of the portions of strings. In some embodiments, the string of a first dominant wavelength can be fired simultaneously with a string of a second dominant wavelength. Where the strings of first and second wavelengths are fired sequentially, the firing order can be used to determine the location of a second bar based on the location of the first bar.

The firing logic of some embodiments can also use random logic to generate the firing order. The random logic can be applied as to the bars where some or all of the strings on a bar are fired simultaneously and the bar that is fired is determined using random logic. For example, in a panel **810** having nine bars, a first fired bar determined by random logic may be bar number three, counting from top to bottom. The second fired bar can be randomly selected from remaining bars one, two, and four through nine. If the random logic selects bar number six for the second firing, the third fired bar is randomly selected from the remaining bars one, two, four, five, and seven through nine. Similarly, the random logic can be applied to individual strings.

Some embodiments can also include means for generating a feedback signal that can provide display performance information to the control system **800**. The means can include performance sensors, such as thermal sensors and color sensors, among others.

Reference is now made to FIG. **9**, which is a block diagram illustrating systems and methods for controlling a solid state lighting panel according to some other embodiments of the invention. A system **900** for controlling a solid state lighting panel **910** that includes multiple strings of solid state lighting devices can include a sequence generator **902** that can generate a firing sequence for firing the multiple strings in the panel **910**. The firing sequence is received by a controller **904** that can provide control signals to a current driver **908**. The current driver **908** can selectively provide current to the multiple strings in the panel **910**.

The sequence generator **902** can include a deterministic algorithm that determines the location and/or identity of a subsequently fired string based on the location of a previously fired string. In some embodiments, the deterministic algorithm can use locations of multiple previously fired strings to select the next string to be fired. The sequence generator **902** of some embodiments can generate a sequence where a first fired string includes solid state lighting devices that emit light in a first dominant wavelength and then a second fired string includes solid state lighting devices that emit light in a second dominant wavelength. Other embodiments can simultaneously fire two and/or more strings having solid state lighting devices that emit light in different dominant wavelengths. The sequence generator **902** can also generate a random firing sequence that can fire the strings in a random sequence based on location and/or dominant wavelength.

The system can include multiple bars that each include a portion of the strings, such that the bars extend across the panel in a first direction and are positioned adjacent one another in a second direction. In some embodiments, the first direction and the second direction can be substantially orthogonal. The firing sequence can cause the simultaneous firing of the portion of strings on one bar at a time. The firing sequence can also cause a simultaneous firing of one or more strings on one bar and one or more strings on another bar. In some embodiments, the simultaneously fired strings can include solid state lighting devices that emit light in more than one dominant wavelength. For example, a first string can emit light in a first dominant wavelength and a second string can emit light in a second dominant wavelength. Further, a single string can include different solid state lighting devices that emit light in different dominant wavelengths.

Reference is now made to FIG. **10**, which is a block diagram illustrating systems and methods for controlling a solid state lighting panel using a multiple phase power supply in accordance with some embodiments of the invention. A control system **1000** selectively provides control signals to a current drivers **1008** or other type of electrical power supply circuit that responsively drives multiple solid state lighting device strings **1012** in a solid state lighting panel **1010**. The control system **1000** can include firing logic **1002** that can determine a firing order for the multiple strings. In some embodiments, the firing logic **1002** can include rule-based logic that can generate a non-spatially-sequential firing order. In some embodiments, the firing logic **1002** can include a spatially sequential firing order.

The current drivers **1008** can include multiple phase drivers **1014** corresponding to N different power phases, for example. Each of the phase drivers **1014** is configured to provide power to one or more different strings **1012** corresponding to that phase. For example, a solid state lighting panel **1010** may include twenty-seven strings that are powered by nine different phase drivers **1014**. In this manner, each phase driver **1014** can provide power to three phase strings **1012**. The firing order of the strings **1012** within each phase group may be configured to be non-spatially sequential. Further, the determination regarding which strings **1012** are in each phase group may also be non-spatially sequential.

By providing multiple phases, each phase driver **1014** can be configured to begin firing at a different time within the period, as determined by, for example, the firing logic. In this manner, the firing of the strings **1012** can be performed in a more uniform manner within each period. By temporally displacing the firing of the different strings **1012** using multiple phase drivers **1014**, the peak dynamic power load may be reduced, which may reduce the power modulation. Reducing the power modulation may improve the performance consistency of other electrical components in a system, such as, for example, LCD drivers in a display. For example, reductions in the magnitude and duration of peak-to-peak power load changes may result in reduced output differences in the LCD display drivers that result therefrom.

Further advantages may also be realized including, for example, a reduction in electromagnetic interference (EMI), a reduction in radio frequency interference (RFI), and/or an increase in system circuit response that may be achieved by reducing the size of a power supply output filter. Since large bursts of EMI/RFI associated with large deviations in power transmission may result in higher susceptibility requirements for other system components, a reduction in EMI/RFI may be advantageous. Additionally, as the quantity of phases per string increases, the current per phase decreases, which may further reduce EMI.

Reference is now made to FIGS. **11**A and **11**B, which illustrate a timing diagram and a graph of a corresponding dynamic power load, respectively, for systems and methods of using a single phase power supply for controlling a solid state lighting panel in accordance with some embodiments of the invention. The timing diagram **1100** plots the string

groups **1110** versus time **1120**, which is divided into periods T**0** and T**1** that may correspond to, for example, cycles in an alternating current (AC) power system. For example, in a sixty Hertz power system, each period is approximately 16.67 milliseconds. The string groups **1110** may include one or more strings of solid state light emitters.

When driven using a single phase power supply, the string groups **1110** will begin firing near the beginning of the period. Each string group **1110** may stop firing at a different time, depending on the duty cycle determined for that particular string group **1110**. For example, a first string group **1112** may have a duty cycle of 50%, which means that the string group **1112** will be driven for approximately 50% of the length of the period. Similarly, a second string group **1114** may have a 60% duty cycle and a third string group **1116** may have a 30% duty cycle.

Referring to FIG. **11**B, which plots the percentage of maximum power versus time, the power load is 100% of maximum when all of the string groups **1110** fire at time t**1** near the beginning of the period. At time t**2**, the third string **1116** turns off, which reduces the power load to 66.7% of maximum. At time t**3**, the second string **1114** turns off, which reduces the power load to 33.3% of maximum and at time t**4**, the first string **1112** turns off, which drops the power load to 0. In this manner, the dynamic power load cycles between 0 and 100% each period. Moreover, since the duration of the high and low values of power load are each significant portions of the period, attempts at improving the dynamic power load through filtering may have adverse consequences regarding power supply response. Although, for illustration purposes, it is assumed that strings consume the same amount of power, this may generally not be the case. For example, a red string may consume more power than a blue string, which may consume more or less power than a green string.

Reference is now made to FIGS. **12**A and **12**B, which are a timing diagram and a graph of a corresponding dynamic power load, respectively, illustrating systems and methods of using a multiple phase power supply for controlling a solid state lighting panel in accordance with some embodiments of the invention. The timing diagram **1200** plots the string groups **1210** versus time **1220**, which is divided into periods T and multiples thereof. The string groups **1210** may include one or more strings of solid state light emitters. Although illustrated as three phases and string groups, multiple phase embodiments may include any number of phases from 2 up to the number of strings and/or groups of emitters.

When driven using a multiple phase or polyphase power supply, the string groups **1210** will begin firing at predetermined times throughout the period T such that the dynamic power loading may be reduced by shifting some of the power load to the later portion of the period. In contrast with the string groups discussed above regarding FIG. **11**A, the string groups **1210** may be started at different times to eliminate the case where all string groups are firing during the first portion of the period. For example, in the case of three strings and/or groups of strings, a period T may be subdivided into three substantially equal portions. For example, a first string group **1212** may be configured to operate at a 50% duty cycle and fire near the beginning of the period **0**. Similarly, a second string group **1214** may be configured to fired at a 60% duty cycle after T/3 time units and a third string group **1216** may be configured to fire at a 45% duty cycle after 2T/3 time units in the period. Thus, the first string group **1212** fires at the beginning of the first third of the period, the second string group **1214** fires at the beginning of the second third of the period and the third string group **1216** fires at the beginning of the final third of the period. This pattern continues for each subsequent period such that each string fires at a predetermined time during each period.

Referring to FIG. **12**B, which plots the percentage of the single phase maximum power versus time, the power load is 33.3% when the first string group **1212** fires at time t**1** near the beginning of the period. At time t**2**, the second string group **1214** begins firing, which increases the power load to 66.7%. At time t**3**, the first string group **1214** turns off, which drops the power load to 33.3%. At time t**4**, the third string group **1216** fires, which increases the power load back to 66.7% until near the end of the period, when the second string group **1214** turns off The power load continues at 33.3% into the next period until the first string group **1212** turns on again, which increases the power load back to 66.7%. The dynamic power load modulates between 33.3% and 66.7% of the single phase maximum power each period. By reducing the magnitude of the peak to peak dynamic loads the effectiveness of power supply filters such as capacitors can be improved.

Although illustrated and discussed relative to 100% of the single phase maximum power, as may be determined by the power required to fire all string groups simultaneously, in some embodiments, the maximum power load may be determined based on the maximum number of string groups that are fired at any point during a period. Thus, for example, the dynamic power load in the present example may be determined as the quantity of power required to fire two string groups simultaneously. In this manner, the dynamic power load may vary from 50% to 100%, with a brief 0% interval, that may, in some embodiments, be filtered out based on the duration of the interval. Although, as illustrated, the system utilizes three different groups, each driven by a different phase, in some embodiments, a system may use, for example, nine phases to drive, for example, twenty-seven different strings. In this manner, each string group may include three strings. It should be appreciated that as the ratio of phases to strings increases and approaches unity, the dynamic power load may decrease correspondingly. In some embodiments, a polyphase power supply may be used in conjunction with a non-spatially-sequential firing order. Although, for illustration purposes, it is assumed that strings consume the same amount of power, this may generally not be the case. For example, a red string may consume more power that a blue string and/or a green string.

Some embodiments may include providing one phase per string. For example, reference is now made to FIGS. **13**A and **13**B, which are a timing diagram and a graph of a corresponding dynamic power load, respectively, illustrating systems and methods of using a multiple phase power supply having a phase for each string. By way of example, a display may include nine strings **1310** of solid state light emitters that may each be fired at a different duty cycle **1312**. A power supply may be included that can include one phase driver for each of the nine different strings **1310**. In this manner, each string may be fired independent of the others. For example, each of the strings **1310** may begin and end firing at different time intervals **1320**. In this manner, the dynamic power load, as illustrated in the graph of FIG. **13**B, can realize a reduced dynamic range.

Each phase may begin and end at a different time and each string may be driven at a different load factor. In some embodiments, the phases may be temporally separated responsive to the number of different phases. For example, where each cycle has a period of T seconds and there are nine phases, the delay between each successive phase may be T/9 seconds. Two consecutive periods for each of the nine phases

is shown to illustrate the resulting dynamic power load during operation. For example, in the firing scheme illustrated in FIG. **13**A, the power load is substantially evenly distributed around an average of approximately 67% and deviates plus or minus 11% from the average value.

In some embodiments, timing the firing of the strings may be determined algorithmically and may be dynamically adjusted depending on the state of the system. Different variables within algorithms and/or different algorithms may be used at various levels and/or hues of requested light output. For example, a particular algorithm and/or set of variables may be used to determine the timing of the firing of the strings when the solid state lighting panel is in a minimum output configuration. In some embodiments, a display may include, a greater number of strings and/or phases. For example, a display may include twenty-seven strings that are configured to be driven by nine phases. In some embodiments, a twenty-seven string display may be driven by twenty-seven phases. Although, for illustration purposes, it is assumed that strings consume the same amount of power, this may generally not be the case.

Reference is now made to FIG. **14**, which is a block diagram illustrating systems and methods for controlling a solid state lighting panel synchronized with an LCD display in accordance with other embodiments of the invention. A display device **1400** may include an LCD panel **1410**, including a two-dimensional arrangement of liquid crystal shutters, that is controlled by an LCD controller **1430**. The LCD controller **1430** may control the output image **1460** by varying on/off values of the LCD shutters corresponding to different color pixels. Since an output image **1460** may typically include dynamic content, the LCD controller **1430** may be configured to refresh the pixels at a predetermined refresh rate.

The LCD panel **1410** relies on dynamic light transmission to control an output image **1460** so the display device **1400** may also include a solid state backlight panel **1420** configured to provide light to be selectively transmitted through the shutters of the LCD panel **1410**. A solid state backlight panel **1420** may include multiple strings of solid state light emitters that can be controlled to achieve a desired color hue and/or luminous intensity. Varying the output of a string may be accomplished, for example, by firing the string for a portion of a period, which may be controlled by a backlight controller **1440**. In some embodiments, the refresh rate of the LCD controller **1430** may be synchronized with the firing of the solid state backlight panel **1420** by sending a synchronizing signal from the LCD controller to the backlight controller **1440**. In this manner, unwanted effects due to the interference of non-synchronized processes operating at different frequencies may be reduced. Synchronized display and backlighting may be used in conjunction with single phase power supply systems and/or polyphase power supply systems. Additionally, synchronization may be used in conjunction with a non-spatially-sequential firing order.

Reference is now made to FIG. **15**, which is a block diagram illustrating systems/methods for controlling a solid state backlighting panel synchronized with an LCD panel in accordance with some embodiments of the invention. An LCD panel **1510** is controlled by a display controller **1530**, which refreshes the pixels in the LCD panel **1510** at a predetermined refresh rate. A solid state backlighting panel **1520** may also be included for providing luminance through the LCD panel **1510**. The solid state backlighting panel **1520** may be controlled by a backlight controller **1540** that can drive multiple strings of solid state light emitters using a current driver **1560**. The output of the solid state backlighting panel **1520** may be controlled by firing the emitters for specific portions of a period. The display controller **1530** may send a synchronizing signal **1550** to the backlight controller **1540** such that the firing rate of the strings corresponds to the refresh rate of the LCD display **1520**. In this manner, the visual effects from interference between the refresh rates of the LCD display **1520** and the solid state lighting panel **1510** may be reduced.

Reference is now made to FIG. **16**, which is a block diagram illustrating systems/methods for controlling a solid state lighting panel according to some embodiments of the invention. The operations **1600** include supplying drive currents to strings in a solid state lighting panel in a non-spatially-sequential firing order (block **1610**). The non-spatially-sequential firing order can be accomplished using, for example, a randomly generated firing order or a deterministic firing order. A deterministic firing order can be rule-based and use rules, such as a rule that the directional relationship between a subsequently fired string and a previously fired string alternates with each firing. Some embodiments can include a rule defining the minimum number of bars and/or strings between sequentially and/or simultaneously fired strings. Embodiments can also include a rule that sequentially and/or simultaneously fired strings are non-adjacent and/or are in non-adjacent bars.

Reference is now made to FIG. **17**, which is a block diagram illustrating systems/methods for controlling a solid state lighting panel according to other embodiments of the invention. The operations **1700** include supplying drive currents to strings of solid state lighting devices arranged in a panel in a non-spatially-sequential firing order (block **1710**). A firing order for a first string and a second string is determined (block **1720**). The firing order determines the order in which the strings will be supplied current. A second string is defined based on a location of the first string (block **1730**). By defining the second string based on the location of the first string, a non-spatially-sequential firing order can be accomplished. In some embodiments the second string can be defined by selecting a string that is non-adjacent the first string and/or is in a bar that is non-adjacent the bar that includes the first string. The second string can also be defined by selecting a string such that a minimum quantity of strings and/or bars are between the first and second strings. A third string can also be defined based on the locations of the first string and the second string. For example, where the second string is in a first direction relative to the first string, the third string is selected to be in a second direction relative to the second string.

Reference is now made to FIG. **18**, which is a block diagram illustrating systems/methods for controlling a solid state lighting panel according to further embodiments of the invention. The operations **1800** include supplying drive currents to strings of solid state lighting devices in a solid state lighting panel in a non-spatially-sequential firing order (block **1810**). The operations can also include grouping the strings on multiple bars that extend from a first edge of the panel to a second edge of the panel (block **1820**). The first and second edges can be opposite one another in a panel configured in a rectilinear geometry. The bars can be arranged adjacent one another and can be substantially parallel to one another in some embodiments. Some embodiments include simultaneously supplying current to the portion of strings that are in a same one of the bars. Embodiments can also include simultaneously supplying current to strings located in more than one of the bars. In some embodiments, a random number can be generated, a value can be assigned to each bar, and current can be simultaneously supplied to the strings in the bar having a value corresponding to the random number.

Reference is now made to FIG. **19**, which is a block diagram illustrating systems/methods for controlling a solid state lighting panel in yet further embodiments of the invention. The operations **1900** include supplying drive currents to strings of solid state lighting devices in a solid state lighting panel in a non-spatially-sequential firing order (block **1910**). The operations can also include supplying current to strings having solid state lighting devices that emit light in a first dominant wavelength in the firing order (block **1920**). Embodiments can also include supplying current to strings having solid state lighting devices that emit light in a second dominant wavelength in the firing order (block **1930**). In this manner, the strings of a first wavelength are fired in a sequence and then strings of a second wavelength are fired in the sequence.

Reference is now made to FIG. **20**, which is a table illustrating an exemplary string firing sequence according to some embodiments of the invention. The table **2000** corresponds to a sequence for a solid state lighting panel having three different color or wavelength strings at each of nine panel positions. The panel positions, which, in some embodiments, can be bars, are designated as the string number (column **2030**) and the color of each string is designated (column **2010**). The firing sequence (column **2020**) indicates each string's position in the sequence of firing. A spatial delta value for each string lists the number of places between the present string and the last fired string in the sequence and is listed for each string (column **2040**). This sequence, for example, provides that the strings of each color are fired as a sequential group and that one color group is fired after another color group. For example, all of the red strings are fired in a location based sequence then all of the green strings are fired in the sequence and then all of the blue strings are fired in the sequence. Note that since no value in the spatial delta column **2040** is less than three, there are no strings fired closer than three positions away from the previously fired string. Further, within each color group, since the spatial delta alternates between positive and negative values, each string fired is located in a different direction relative to the previously fired string from the direction between the previously fired string and its predecessor.

Although some embodiments are described in connection with LCD backlights, embodiments of the invention may be used for other purposes, such as general lighting. In the drawings and specification, there have been disclosed typical embodiments of the invention and, although specific terms are employed, they are used in a generic and descriptive sense only and not for purposes of limitation, the scope of the invention being set forth in the following claims.

That which is claimed is:

1. A lighting system, comprising:

a plurality of strings of solid state lighting devices arranged in a first direction and positioned at intervals in at least one second direction;

a current supply circuit configured to selectively supply a plurality of on-state drive currents to the plurality of strings responsive to a plurality of control signals; and

a control system configured to receive a user input and to selectively provide control signals to the current supply circuit responsive to the user input to selectively drive the plurality of strings, the control system further including firing logic configured to determine a firing order of the plurality of strings.

2. The system of claim **1**, wherein the firing logic comprises rule-based logic operative to generate a non-spatially-sequential firing order.

3. The system of claim **2**, wherein the rule-based logic comprises a rule that a second string fired after a first string is non-adjacent the first string.

4. The system of claim **2**, wherein the rule-based logic comprises a rule that a first string is fired simultaneously with a second string, wherein the first string is non-adjacent the second string.

5. The system of claim **1**, wherein ones of the plurality of strings are arranged corresponding to a plurality of bars that include portions of the plurality of strings, wherein the plurality of bars extend in the first direction and are positioned adjacent one another in a substantially parallel arrangement.

6. The system of claim **5**, wherein the firing order is operative to cause a first firing, a second firing and a third firing, wherein the first firing occurs before the second firing and the second firing occurs before the third firing, wherein the first firing supplies current for at least one string in a first bar, the second firing supplies current for at least one string in a second bar and the third firing supplies current for at least one string in a third bar, wherein the second bar is located below the first bar and the third bar is located above the second bar.

7. The system of claim **5**, further comprising:

a first portion of the plurality of strings including solid state lighting devices that emit light in a first dominant wavelength; and

a second portion of the plurality of strings including solid state lighting devices that emit light in a second dominant wavelength,

wherein each of the plurality of bars includes at least one string of the first portion of the plurality of strings and at least one string of the second portion of the plurality of strings and wherein each of the first portion of the plurality of strings is fired in the firing order and then each of the second portion of the plurality of strings is fired in the firing order.

8. The system of claim **5**, further comprising:

a first portion of the plurality of strings in a first bar; and

a second portion of the plurality of strings in a second bar,

wherein the first and second portions of the plurality of strings are fired sequentially in the firing order and wherein the firing order is configured to determine the location of the second bar relative to the location of the first bar.

9. The system of claim **1**, further comprising:

a first portion of the plurality of strings including solid state lighting devices that emit light in a first dominant wavelength; and

a second portion of the plurality of strings including solid state lighting devices that emit light in a second dominant wavelength,

wherein at least one string of the first portion of the plurality of strings is fired simultaneously with at least one string of the second portion of the plurality of strings.

10. The system of claim **1**, further comprising:

a first portion of the plurality of strings including solid state lighting devices that emit light in a first dominant wavelength; and

a second portion of the plurality of strings including solid state lighting devices that emit light in a second dominant wavelength,

wherein each of the first portion of the plurality of strings is fired in the firing order and then each of the second portion of the plurality of strings is fired in the firing order.

11. The system of claim **1**, wherein the firing logic comprises random logic operative to generate the firing order.

12. The system of claim 1, further comprising a means for generating a feedback signal configured to provide display performance information to the control system.

13. The system of claim 1,

wherein the current supply circuit comprises a plurality of phase drivers configured to supply a plurality of on-state drive currents at a plurality of times in a firing cycle,

wherein the plurality of strings of solid state lighting devices comprise a plurality of string groups, each configured to receive current from one of the plurality of phase drivers, and

wherein the control system is further configured to determine the plurality of times that each of the plurality of phase drivers begin to supply current to the plurality of string groups.

14. The system of claim 13, wherein the ratio of a quantity of the plurality of phase drivers to a quantity of the plurality of strings of solid state lighting devices is one and wherein each of the plurality of string groups comprises one of the plurality of strings of solid state lighting devices.

15. The system of claim 1, wherein the control system is configured to receive a synchronizing signal from a display controller configured to control a display and wherein the firing order is synchronized with periodic operations of the display.

16. The system of claim 1, wherein the second direction is substantially orthogonal to the first direction.

17. A method for controlling a plurality of strings of solid state lighting devices configured to extend in a first direction and to be arranged in substantially adjacent positions relative to one another in a second direction that is different from the first direction, the method comprising:

receiving an input from a user; and

supplying, based in part on the input from the user, a plurality of pulsed drive currents to the plurality of strings in a non-spatially-sequential firing order.

18. The method of claim 17, further comprising:

determining the firing order that supplies current to a first string of the plurality of strings and a second string of the plurality of strings; and

defining the second string of the plurality of strings, wherein the defining is based on a location of the first string.

19. The method of claim 18, wherein defining the second string comprises selecting one of the plurality of strings that is not adjacent to the first string.

20. The method of claim 18, wherein defining the second string comprises selecting one of the plurality of strings that is located a minimum quantity of strings from the first string.

21. The method of claim 18, further comprising defining a third string of the plurality of strings, wherein the third string is configured to be fired after the second string and wherein the defining is based on a location of the second string and the location of the first string.

22. The method of claim 21, wherein defining the second string comprises selecting one of a plurality of strings that is on a first side of the first string and defining the third string comprises selecting one of the plurality of strings that is on a second side of the second string.

23. The method of claim 17, further comprising grouping a plurality of portions of the plurality of strings on a plurality of bars, wherein the plurality of bars extend across the panel from the first edge to the second edge and are positioned adjacent one another in a substantially parallel arrangement.

24. The method of claim 23, further comprising simultaneously supplying current to the portion of the plurality of strings that are in the same one of the plurality of bars.

25. The method of claim 23, further comprising simultaneously supplying current to a first string located in a first bar and a second string located in a second bar.

26. The method of claim 23, further comprising:

generating a random number;

assigning a value to each of the plurality of bars; and

simultaneously supplying current to the portion of the plurality of strings on one of the plurality of bars based on the random number.

27. The method of claim 17, further comprising:

supplying current to a first portion of the plurality of strings according to the firing order, wherein the first portion of the plurality of strings includes solid state lighting devices configured to emit light in a first dominant wavelength; and

supplying current to a second portion of the plurality of strings according to the firing order after supplying current to the first portion of the plurality of strings, wherein the second portion of the plurality of strings includes solid state lighting devices configured to emit light in a second dominant wavelength.

28. The method of claim 17, wherein defining is further based on a dominant wavelength of light emitted by the solid state lighting devices in the first string.

29. The method of claim 17, further comprising simultaneously supplying current to a first string including solid state lighting devices configured to emit light in a first dominant wavelength and a second string including solid state lighting devices configured to emit light in a second dominant wavelength.

30. The method of claim 17, further comprising:

determining the firing order that supplies current to a first string of the plurality of strings and a second string of the plurality of strings; and

defining the second string based on a dominant wavelength emitted by the solid state lighting devices in the first string and a relative position of the first string.

31. The method of claim 17, comprising determining the firing order using a numerical technique.

32. The method of claim 31, further comprising:

generating a random number;

assigning a value to each of the plurality of strings; and

supplying current to one of the plurality of strings based on the random number.

33. The method of claim 31, wherein the numerical technique comprises performing a non-linear calculation.

34. The method of claim 17, wherein the firing order comprises a deterministic order based on at least one rule.

35. A system for controlling a plurality of strings of solid state lighting devices that are arranged to extend in a first direction and are positioned adjacent one another in a second direction and that are supplied current by a plurality of current drivers, the system comprising:

a sequence generator that generates a firing sequence for firing the plurality of strings; and

a controller that receives a user input and provides control signals, responsive to the sequence generator and the user input, to the plurality of current drivers.

36. The system of claim 35, wherein the sequence generator comprises a deterministic algorithm that determines a location of a subsequently fired string based on a location of at least one previously fired string.

37. The system of claim 35, wherein the sequence generator comprises an algorithm that generates a sequence to fire a first string having a plurality of solid state lighting devices that emit light in a first dominant wavelength and a second string having a plurality of solid state lighting devices that

emit light in a second dominant wavelength, wherein the second string is fired after the first string.

38. The system of claim **35**, wherein the sequence generator comprises an algorithm that generates a sequence to simultaneously fire a first string having a plurality of solid state lighting devices that emit light in a first dominant wavelength and a second string having a plurality of solid state lighting devices that emit light in a second dominant wavelength.

39. The system of claim **35**, wherein the sequence generator generates a random sequence of firing.

40. The system of claim **35**, further comprising a plurality of bars that include portions of the plurality of strings, wherein the plurality of bars extend in the first direction and are positioned adjacent one another in the second direction.

41. The system of claim **40**, wherein the firing sequence is configured to simultaneously fire a first portion of the plurality of strings and then simultaneously fire a second portion of the plurality of strings and wherein the first portion is located on a first bar and the second portion is located on a second bar.

42. The system of claim **40**, wherein the firing sequence is configured to simultaneously fire a first string on a first bar and a second string on a second bar.

43. The system of claim **42**, wherein the first string includes solid state lighting devices that emit light in a first dominant wavelength and the second string includes solid state lighting devices that emit light in a second dominant wavelength.

44. The system of claim **35**, further comprising:

a first portion of the plurality of strings including solid state lighting devices that emit light in a first dominant wavelength; and

a second portion of the plurality of strings including solid state lighting devices that emit light in a second dominant wavelength;

wherein each of the plurality of bas includes at least one string of the first portion of the plurality of strings and at least one string of the second portion of the plurality of strings.

45. The system of claim **44**, wherein the firing sequence is operative to cause the first portion of strings to fire in a first sequence and to then to cause the second portion of strings to fire in the first sequence.

46. The system of claim **35**, wherein the plurality of drivers comprise a polyphase power supply configured to a supply a plurality of temporally shifted drive currents to a plurality of groups of the plurality of strings.

47. A method for controlling a plurality of strings of solid state lighting devices configured to extend in a first direction and arranged substantially adjacent to one another, the method comprising supplying a plurality of pulsed drive currents to a plurality of groups of the plurality of strings.

48. The method of claim **47**, further comprising receiving a user input,

Wherein supplying the plurality of pulsed drive currents is based on the user input.

49. The method of claim **47**, wherein each group of the plurality of groups comprises one of the plurality of strings and wherein one of the plurality of pulsed drive currents is provided for each of the plurality of strings by one of a plurality of phase drivers.

50. The method of claim **49**, further comprising receiving a synchronizing signal from a display controller configured to control a refresh rate of display pixels.

51. The method of claim **47**, further comprising synchronizing the plurality of drive currents with a cycles of a periodic operation of a display panel.

52. The method of claim **51**, wherein the periodic operation comprises refreshing pixels and wherein the display panel comprises an LCD display panel.

53. A system, comprising:

a plurality of strings of solid state lighting devices arranged in a first direction and positioned at intervals in a second direction that is substantially orthogonal to the first direction;

a current supply circuit configured to selectively supply a plurality of on-state drive currents to the plurality of strings responsive to a plurality of control signals;

a control system configured to receive an input from a user and, responsive to the input, to selectively provide control signals to the current supply circuit to selectively drive the plurality of strings, the control system further including firing logic configured to determine a firing order of the plurality of strings; and

wherein the firing logic is configured to drive the plurality of strings in a spatially non-adjacent, non-sequential firing order and/or to drive the plurality of strings at different times for at least a subset of the plurality of strings.

54. The system of claim **53**, wherein the firing logic is further configured to drive the plurality of strings and/or portions thereof at least partially based on the spatial relationship between the plurality of strings and or portions thereof.

55. The system of claim **53**, wherein the firing logic comprises rule-based logic configured to generate a non-spatially sequential firing order.

56. The system of claim **55**, wherein the rule-based logic further comprises a rule that a second string fired after a first string is non-adjacent the first string.

57. The system of claim **55**, wherein the rule-based logic further comprises a rule that if first string is fired simultaneously with a second string, then the first string is non-adjacent the second string.

* * * * *