Document made available under the Patent Cooperation Treaty (PCT)

International application number: PCT/CA05/000958

International filing date: 22 June 2005 (22.06.2005)

Document type: Certified copy of priority document

Document details: Country/Office: US
Number: 60/619,461
Filing date: 15 October 2004 (15.10.2004)

Date of receipt at the International Bureau: 09 September 2005 (09.09.2005)

Remark: Priority document submitted or transmitted to the International Bureau in compliance with Rule 17.1(a) or (b)

World Intellectual Property Organization (WIPO) - Geneva, Switzerland
Organisation Mondiale de la Propriété Intellectuelle (OMPI) - Genève, Suisse

PCT/CA 20050000958

PA 1319977

THE UNITED STATES OF AMERICA

TO ALL TO WHOM THESE PRESENTS SHALL COME:

UNITED STATES DEPARTMENT OF COMMERCE

United States Patent and Trademark Office

May 16, 2005

THIS IS TO CERTIFY THAT ANNEXED HERETO IS A TRUE COPY FROM THE RECORDS OF THE UNITED STATES PATENT AND TRADEMARK OFFICE OF THOSE PAPERS OF THE BELOW IDENTIFIED PATENT APPLICATION THAT MET THE REQUIREMENTS TO BE GRANTED A FILING DATE UNDER 35 USC 111.

APPLICATION NUMBER: *60/619,461*
FILING DATE: *October 15, 2004*

By Authority of the
COMMISSIONER OF PATENTS AND TRADEMARKS

E. Bornett

E. BORNETT
Certifying Officer

13146 U.S. PTO
101504

PTO/SB/16 (09-04)
Approved for use through 07/31/2006. OMB 0651-0032
U.S. Patent and Trademark Office; U.S. DEPARTMENT OF COMMERCE
Under the Paperwork Reduction Act of 1995, no persons are required to respond to a collection of information unless it displays a valid OMB control number.

PROVISIONAL APPLICATION FOR PATENT COVER SHEET

This is a request for filing a PROVISIONAL APPLICATION FOR PATENT under 37 CFR 1.53(c).

Express Mail Label No. EV 517424360 US

INVENTOR(S)

Given Name (first and middle [if any])	Family Name or Surname	Residence (City and either State or Foreign Country)
HANG	ZHANG	NEPEAN, ONTARIO, CANADA

Additional inventors are being named on the ONE *separately numbered sheets attached hereto*

15535 U.S. PTO
60/619461
101504

TITLE OF THE INVENTION (500 characters max):

MAC LAYER AND PHYSICAL LAYER SYSTEMS AND METHODS

Direct all correspondence to: **CORRESPONDENCE ADDRESS**

☑ The address corresponding to Customer Number: 00626

OR

☐ Firm or Individual Name

Address

City	State	Zip
Country	Telephone	Fax

ENCLOSED APPLICATION PARTS ***(check all that apply)***

☑ Specification *Number of Pages* 160

☐ Drawing(s) *Number of Sheets* _____

☐ Application Data Sheet. See 37 CFR 1.76

☐ CD(s), Number of CDs _____

☐ Other (specify) _____

METHOD OF PAYMENT OF FILING FEES FOR THIS PROVISIONAL APPLICATION FOR PATENT

☐ Applicant claims small entity status. See 37 CFR 1.27.

☐ A check or money order is enclosed to cover the filing fees.

☐ Payment by credit card. Form PTO-2038 is attached.

☑ The Director is hereby authorized to charge filing fees or credit any overpayment to Deposit Account Number: 14-1315
A duplicative copy of this form is enclosed for fee processing.

FILING FEE Amount ($): 160.00

☐ The invention was made by an agency of the United States Government or under a contract with an agency of the United States Government. No.

☐ Yes, the name of the U.S. Government agency and the Government contract number are: _____

SIGNATURE _____ Date October 15, 2004

TYPED or PRINTED NAME Paul Hashim REGISTRATION NO. 31,618 *(if appropriate)*

TELEPHONE 942-684-7886 Docket Number: 17399ROUS01P

USE ONLY FOR FILING A PROVISIONAL APPLICATION FOR PATENT

This collection of information is required by 37 CFR 1.51. The information is required to obtain or retain a benefit by the public which is to file (and by the USPTO to process) an application. Confidentiality is governed by 35 U.S.C. 122 and 37 CFR 1.11 and 1.14. This collection is estimated to take 8 hours to complete, including gathering, preparing, and submitting the completed application form to the USPTO. Time will vary depending upon the individual case. Any comments on the amount of time you require to complete this form and/or suggestions for reducing this burden, should be sent to the Chief Information Officer, U.S. Patent and Trademark Office, U.S. Department of Commerce, P.O. Box 1450, Alexandria, VA 22313-1450. DO NOT SEND FEES OR COMPLETED FORMS TO THIS ADDRESS. **SEND TO: Commissioner for Patents, P.O. Box 1450, Alexandria, VA 22313-1450.**
If you need assistance in completing the form, call 1-800-PTO-9199 and select option 2.

Copy provided by USPTO from the IFW Image Database on 05/12/2005

PROVISIONAL APPLICATION COVER SHEET
Additional Page

PTO/SB/16 (09-04)
Approved for use through 07/31/2006. OMB 0651-0032
U.S. Patent and Trademark Office; U.S. DEPARTMENT OF COMMERCE
Under the Paperwork Reduction Act of 1995, no persons are required to respond to a collection of information unless it displays a valid OMB control number.

First Named Inventor	HANG ZHANG	Docket Number 17399ROUS01P

INVENTOR(S)/APPLICANT(S)

Given Name (first and middle [if any])	Family or Surname	Residence (City and either State or Foreign Country)
MO-HAN	FONG	L'ORIGINAL, ONTARIO, CANADA
PEIYING	ZHU	KANATA, ONTARIO, CANADA
WEN	TONG	OTTAWA, ONTARIO, CANADA
JIANGLEI	MA	OTTAWA, ONTARIO, CANADA

Number ___ONE___ of ___ONE___

WARNING: Information on this form may become public. Credit card information should not be included on this form. Provide credit card information and authorization on PTO-2038.

Copy provided by USPTO from the IFW Image Database on 05/12/2005

Attorney Docket No. 17399ROUS01P

PROVISIONAL PATENT APPLICATION

SUBMITTED ON OCTOBER 15, 2004

TITLE:

MAC LAYER AND PHYSICAL LAYER SYSTEMS AND METHODS

INVENTOR:

HANG ZHANG
24 Gardengate Way
Nepean, Ontario
Canada
K2G 5Z1

MO-HAN FONG
1578 Bay Road
L'Original, Ontario
Canada
K0B 1K0

PEIYING ZHU
16 Pebble Creek Crescent
Kanata, Ontario
K2M 2L4

WEN TONG
12 Whitestone Drive
Ottawa, Ontario
Canada
K2C 4A7

JIANGLEI MA
3 Bon Echo Crescent
Ottawa, Ontario
K2M 2W5

Copy provided by USPTO from the IFW Image Database on 05/12/2005

TABLE OF CONTENTS

Section 1	RESOURCE ALLOCATION SYSTEM AND METHOD FOR DETERMINISTIC TRAFFIC
Section 2	FEEDBACK HEADER SYSTEMS AND METHODS
Section 3	HIERARCHICAL MAP STRUCTURE SYSTEMS AND METHODS
Section 4	PILOT PATTERN SYSTEM AND METHOD
Section 5	SHORT DATA BURST SYSTEMS AND METHODS
Section 6	UPLINK CHANNEL SYSTEMS AND METHODS
Section 7	DOWNLINK RESOURCE ALLOCATION SYSTEM AND METHOD

Copy provided by USPTO from the IFW Image Database on 05/12/2005

RESOURCE ALLOCATION SYSTEM AND METHOD FOR DETERMINISTIC TRAFFIC

Field of the Invention

This invention generally relates to the field of wireless communications. More specifically to resource allocation systems and methods for broadband mobile wireless metropolitan area networks including networks operating according to the IEEE 802.16(e) standard.

Background of the Invention

In the current 802.16e standard draft (p802.16e/D5), the downlink / uplink (DL/UL) resource assignments are indicated by DL/UL map information elements (IEs) in the DL/UL-MAP message. The current resource assignment is performed on the frame-by-frame basis.

For services, like unsolicited grant service (UGS) and real-time polling service (rtPS), the data arriving arriving at the transmitter (*i.e.* BS for DL and MSS for UL) has certain deterministic patterns and in certain cases may also be stream-like. For these types of traffic, if resource assignment has to be performed on a frame-by-frame basis, large amounts of MAC overhead will be incurred.

A need exists therefore for improved systems and methods for resource allocation for handling deterministic traffic.

Copy provided by USPTO from the IFW Image Database on 05/12/2005

Summary of the Invention

It is an object of the invention to simplify the resource assignment for UGS and rtPS, to reduce unnecessary MAC overhead.

It is an object of the invention to provide a resource allocation system and method for use in networks operating in accordance with the IEEE 802.16 standard.

Further objects of the invention include provide the following:

- A DL MAP IE – According to this aspect of the invention the dedicated resource allocation IE may allocate dedicated DL resource for a certain period of time. Such an allocation may be de-allocated or modified at any time
- A UL MAP IE – According to this aspect of the invention the Dedicated resource allocation IE may allocate dedicated UL resource for a certain period of time. Such an allocation may be de-allocated and modified at any time

It is a further object of the invention to provide a resource allocation system and method wherein if a dedicated DL resource is defined as a DL region in every N^{th} frame and assigned to a MSS, the MSS may decode this dedicated channel until the end of the assignment period or until receiving a Dedicated resource IE for the de-allocation. In addition to the dedicated resource, additional DL resource may also be allocated by using normal DL MAP IE if the dedicated resource is not enough to send the buffered data.

It is a further object of the invention to provide a resource allocation system and method wherein if a dedicated UL resource is defined as a UL region in every N^{th} frame and assigned to a MSS, the MSS may transmit UL data on this dedicated channel until the end of the assignment period or until receiving Dedicated resource IE for the de-allocation. In addition to the dedicated resource, some extra UL resource may also be allocated by using normal DL MAP IE if the MSS requires some extra UL resource.

It is another object of the invention to provide for the power efficient operation of MSSs, wherein the MSS monitors the DL/UL-MAP messages in the frame where the MSS needs to decode data on the DL dedicated resource or needs to send data using the UL dedicated resource. In this case, the extra resource allocation happens in such a frame. In accordance with an embodiment of the invention the MSS monitors only the DL/UL-MAP messages in the frame where the MSS needs to decode data on the DL dedicated resource or needs to send data using the UL dedicated resource.

It is another object of the invention that DL/UL modulation and coding schemes (called DIUC and UIUC respectively) may be changed in a slow fashion. The modification may be based on long term C/I statistics.

Copy provided by USPTO from the IFW Image Database on 05/12/2005

Brief Description of the Figures

Figure 1 is a block representation of a cellular communication system.

Figure 2 is a block representation of a base station according to one embodiment of the present invention.

Figure 3 is a block representation of a mobile terminal according to one embodiment of the present invention.

Figure 4 is a logical breakdown of an OFDM transmitter architecture according to one embodiment of the present invention.

Figure 5 is a logical breakdown of an OFDM receiver architecture according to one embodiment of the present invention.

Figure 6 illustrates a pattern of sub-carriers for carrying pilot symbols in an OFDM environment.

Detailed Description of Embodiments of the Invention

The following modification is based on IEEE standard p802.16e/D5 which is hereby incorporated by reference.

In accordance with embodiments of the invention dedicated resource allocation information elements (IEs) are described.

In accordance with an embodiment of the invention Table 1 provides a DL MAP IE format that may be used by a Basestation (BS) to allocate dedicate DL resource allocation to one or more MSSes and to de-allocation/modify an existing allocation

Copy provided by USPTO from the IFW Image Database on 05/12/2005

Table 1 – Dedicated resource allocation IE format

Syntax	Size	Notes
Dedicated_resource_allocation_IE()		
Extended DIUC	4 bits	0x09
Length	4 bits	Length in bytes
Num_Allocations	4 bits	Number of allocations in this IE
For (i=0; i<Num_Allocations;i++)		
{		
CID	16 bits	
Duration(d)	3 bits	The allocation is valid for 10 x 2^d frame starting from the next frame If d ==0b000, the dedicated allocation is de-allocated If d == 0b111, the dedicated resource shall be valid until the BS commands to de-allocate the dedicated allocation
If (d!=000)		
{		
DIUC	4 bits	
OFDMA_symbol_offset	8 bits	
Subchannel_offset	6 bits	
Boosting	3 bits	
No. OFDMA symbols	8 bits	
No. subchannels	6 bits	
Repetition Coding Indication	2 bits	
Period(p)	2 bits	The DL resource region is dedicated to a MSS in every 2^pth frame
}		
}		
}		

Wherein:

Num_Allocations

Number of allocations in this IE

Duration(d)

The allocation is valid for 10 x 2^d frames starting from the next frame

If d ==0b000, the dedicated allocation is de-allocated

If d == 0b111, the dedicated resource is valid until the BS commands to de-allocate the dedicated allocation

Period(p)

The DL resource region is dedicated to a MSS in every 2^pth frame

Copy provided by USPTO from the IFW Image Database on 05/12/2005

In accordance with an embodiment of the invention Table 2 shows an UL MAP IE format that may be used by a BS to allocate dedicated UL resource allocations to one or more Mobile Subscriber Stations (MSSs) and to de-allocate/modify an existing allocation.

Table 2 – Dedicated resource allocation IE format

Syntax	Size	Notes
Dedicated_resource_allocation_IE()		
Extended UIUC	4 bits	0x09
Length	4 bits	Length in bytes
Num_Allocations	4 bits	Number of allocations in this IE
For (i=0; i<Num_Allocations;i++)		
{		
CID	16 bits	
Duration(d)	3 bits	The allocation is valid for 10 x 2^d frame starting from the next frame If d ==0b000, the dedicated allocation is de-allocated If d == 0b111, the dedicated resource shall be valid until the BS commands to de-allocate the dedicated allocation
If (d!=000)		
{		
UIUC	4 bits	
OFDMA_symbol_offset	8 bits	
Subchannel_offset	6 bits	
Boosting	3 bits	
No. OFDMA symbols	8 bits	
No. subchannels	6 bits	
Repetition Coding Indication	2 bits	
Period(p)	2 bits	The UL resource region is dedicated to a MSS in every 2^Pth frame
}		
}		
}		

Wherein:

Num_Allocations

Number of allocations in this IE

Duration(d)

The allocation is valid for 10 x 2^d frames starting from the next frame

If d ==0b000, the dedicated allocation is de-allocated

Copy provided by USPTO from the IFW Image Database on 05/12/2005

If d == 0b111, the dedicated resource is valid until the BS commands to de-allocate the dedicated allocation

Period(p)

The UL resource region is dedicated to a MSS in every 2^pth frame

With reference to Figure 1, a base station controller (BSC) 10 controls wireless communications within multiple cells 12, which are served by corresponding base stations (BS) 14. In general, each base station 14 facilitates communications using OFDM with mobile terminals 16, which are within the cell 12 associated with the corresponding base station 14. The movement of the mobile terminals 16 in relation to the base stations 14 results in significant fluctuation in channel conditions. As illustrated, the base stations 14 and mobile terminals 16 may include multiple antennas to provide spatial diversity for communications.

A high level overview of the mobile terminals 16 and base stations 14 of the present invention is provided prior to delving into the structural and functional details of the preferred embodiments. With reference to Figure 2, a base station 14 configured according to one embodiment of the present invention is illustrated. The base station 14 generally includes a control system 20, a baseband processor 22, transmit circuitry 24, receive circuitry 26, multiple antennas 28, and a network interface 30. The receive circuitry 26 receives radio frequency signals bearing information from one or more remote transmitters provided by mobile terminals 16 (illustrated in Figure 3). Preferably, a low noise amplifier and a filter (not shown) cooperate to amplify and remove broadband interference from the signal for processing. Downconversion and digitization circuitry (not shown) will then downconvert the filtered, received signal to an intermediate or baseband frequency signal, which is then digitized into one or more digital streams.

The baseband processor 22 processes the digitized received signal to extract the information or data bits conveyed in the received signal. This processing typically comprises demodulation, decoding, and error correction operations. As such, the baseband processor 22 is generally implemented in one or more digital signal processors (DSPs) or application-specific integrated circuits (ASICs). The received information is then sent across a wireless network via the network interface 30 or transmitted to another mobile terminal 16 serviced by the base station 14.

On the transmit side, the baseband processor 22 receives digitized data, which may represent voice, data, or control information, from the network interface 30 under the control of control system 20, and encodes the data for transmission. The encoded data is output to the transmit circuitry 24, where it is modulated by a carrier

Copy provided by USPTO from the IFW Image Database on 05/12/2005

signal having a desired transmit frequency or frequencies. A power amplifier (not shown) will amplify the modulated carrier signal to a level appropriate for transmission, and deliver the modulated carrier signal to the antennas 28 through a matching network (not shown). Modulation and processing details are described in greater detail below.

With reference to Figure 3, a mobile terminal 16 configured according to one embodiment of the present invention is illustrated. Similarly to the base station 14, the mobile terminal 16 will include a control system 32, a baseband processor 34, transmit circuitry 36, receive circuitry 38, multiple antennas 40, and user interface circuitry 42. The receive circuitry 38 receives radio frequency signals bearing information from one or more base stations 14. Preferably, a low noise amplifier and a filter (not shown) cooperate to amplify and remove broadband interference from the signal for processing. Downconversion and digitization circuitry (not shown) will then downconvert the filtered, received signal to an intermediate or baseband frequency signal, which is then digitized into one or more digital streams.

The baseband processor 34 processes the digitized received signal to extract the information or data bits conveyed in the received signal. This processing typically comprises demodulation, decoding, and error correction operations, as will be discussed on greater detail below. The baseband processor 34 is generally implemented in one or more digital signal processors (DSPs) and application specific integrated circuits (ASICs).

For transmission, the baseband processor 34 receives digitized data, which may represent voice, data, or control information, from the control system 32, which it encodes for transmission. The encoded data is output to the transmit circuitry 36, where it is used by a modulator to modulate a carrier signal that is at a desired transmit frequency or frequencies. A power amplifier (not shown) will amplify the modulated carrier signal to a level appropriate for transmission, and deliver the modulated carrier signal to the antennas 40 through a matching network (not shown). Various modulation and processing techniques available to those skilled in the art are applicable to the present invention.

In OFDM modulation, the transmission band is divided into multiple, orthogonal carrier waves. Each carrier wave is modulated according to the digital data to be transmitted. Because OFDM divides the transmission band into multiple carriers, the bandwidth per carrier decreases and the modulation time per carrier increases. Since the multiple carriers are transmitted in parallel, the transmission rate for the digital data, or symbols, on any given carrier is lower than when a single carrier is used.

Copy provided by USPTO from the IFW Image Database on 05/12/2006

OFDM modulation requires the performance of an Inverse Fast Fourier Transform (IFFT) on the information to be transmitted. For demodulation, the performance of a Fast Fourier Transform (FFT) on the received signal is required to recover the transmitted information. In practice, the IFFT and FFT are provided by digital signal processing carrying out an Inverse Discrete Fourier Transform (IDFT) and Discrete Fourier Transform (DFT), respectively. Accordingly, the characterizing feature of OFDM modulation is that orthogonal carrier waves are generated for multiple bands within a transmission channel. The modulated signals are digital signals having a relatively low transmission rate and capable of staying within their respective bands. The individual carrier waves are not modulated directly by the digital signals. Instead, all carrier waves are modulated at once by IFFT processing.

In the preferred embodiment, OFDM is used for at least the downlink transmission from the base stations 14 to the mobile terminals 16. Each base station 14 is equipped with n transmit antennas 28, and each mobile terminal 16 is equipped with m receive antennas 40. Notably, the respective antennas can be used for reception and transmission using appropriate duplexers or switches and are so labeled only for clarity.

With reference to Figure 4, a logical OFDM transmission architecture is provided according to one embodiment. Initially, the base station controller 10 will send data to be transmitted to various mobile terminals 16 to the base station 14. The base station 14 may use the CQIs associated with the mobile terminals to schedule the data for transmission as well as select appropriate coding and modulation for transmitting the scheduled data. The CQIs may be directly from the mobile terminals 16 or determined at the base station 14 based on information provided by the mobile terminals 16. In either case, the CQI for each mobile terminal 16 is a function of the degree to which the channel amplitude (or response) varies across the OFDM frequency band.

The scheduled data 44, which is a stream of bits, is scrambled in a manner reducing the peak-to-average power ratio associated with the data using data scrambling logic 46. A cyclic redundancy check (CRC) for the scrambled data is determined and appended to the scrambled data using CRC adding logic 48. Next, channel coding is performed using channel encoder logic 50 to effectively add redundancy to the data to facilitate recovery and error correction at the mobile terminal 16. Again, the channel coding for a particular mobile terminal 16 is based on the CQI. The channel encoder logic 50 uses known Turbo encoding techniques in one embodiment. The encoded data is then processed by rate matching logic 52 to compensate for the data expansion associated with encoding.

Copy provided by USPTO from the IFW Image Database on 05/12/2005

Bit interleaver logic 54 systematically reorders the bits in the encoded data to minimize the loss of consecutive data bits. The resultant data bits are systematically mapped into corresponding symbols depending on the chosen baseband modulation by mapping logic 56. Preferably, Quadrature Amplitude Modulation (QAM) or Quadrature Phase Shift Key (QPSK) modulation is used. The degree of modulation is preferably chosen based on the CQI for the particular mobile terminal. The symbols may be systematically reordered to further bolster the immunity of the transmitted signal to periodic data loss caused by frequency selective fading using symbol interleaver logic 58.

At this point, groups of bits have been mapped into symbols representing locations in an amplitude and phase constellation. When spatial diversity is desired, blocks of symbols are then processed by space-time block code (STC) encoder logic 60, which modifies the symbols in a fashion making the transmitted signals more resistant to interference and more readily decoded at a mobile terminal 16. The STC encoder logic 60 will process the incoming symbols and provide n outputs corresponding to the number of transmit antennas 28 for the base station 14. The control system 20 and/or baseband processor 22 will provide a mapping control signal to control STC encoding. At this point, assume the symbols for the n outputs are representative of the data to be transmitted and capable of being recovered by the mobile terminal 16. See A.F. Naguib, N. Seshadri, and A.R. Calderbank, "Applications of space-time codes and interference suppression for high capacity and high data rate wireless systems," Thirty-Second Asilomar Conference on Signals, Systems & Computers, Volume 2, pp. 1803-1810, 1998, which is incorporated herein by reference in its entirety.

For the present example, assume the base station 14 has two antennas 28 (n=2) and the STC encoder logic 60 provides two output streams of symbols. Accordingly, each of the symbol streams output by the STC encoder logic 60 is sent to a corresponding IFFT processor 62, illustrated separately for ease of understanding. Those skilled in the art will recognize that one or more processors may be used to provide such digital signal processing, alone or in combination with other processing described herein. The IFFT processors 62 will preferably operate on the respective symbols to provide an inverse Fourier Transform. The output of the IFFT processors 62 provides symbols in the time domain. The time domain symbols are grouped into frames, which are associated with a prefix by like insertion logic 64. Each of the resultant signals is up-converted in the digital domain to an intermediate frequency and converted to an analog signal via the corresponding digital up-conversion (DUC) and digital-to-analog (D/A) conversion circuitry 66. The resultant (analog) signals are then simultaneously modulated at the desired RF frequency, amplified, and transmitted via the RF circuitry 68 and antennas 28. Notably, pilot signals known by the intended mobile terminal 16 are scattered among the sub-

Copy provided by USPTO from the IFW Image Database on 05/12/2005

carriers. The mobile terminal 16, which is discussed in detail below, will use the pilot signals for channel estimation.

Reference is now made to Figure 5 to illustrate reception of the transmitted signals by a mobile terminal 16. Upon arrival of the transmitted signals at each of the antennas 40 of the mobile terminal 16, the respective signals are demodulated and amplified by corresponding RF circuitry 70. For the sake of conciseness and clarity, only one of the two receive paths is described and illustrated in detail. Analog-to-digital (A/D) converter and down-conversion circuitry 72 digitizes and downconverts the analog signal for digital processing. The resultant digitized signal may be used by automatic gain control circuitry (AGC) 74 to control the gain of the amplifiers in the RF circuitry 70 based on the received signal level.

Initially, the digitized signal is provided to synchronization logic 76, which includes coarse synchronization logic 78, which buffers several OFDM symbols and calculates an auto-correlation between the two successive OFDM symbols. A resultant time index corresponding to the maximum of the correlation result determines a fine synchronization search window, which is used by fine synchronization logic 80 to determine a precise framing starting position based on the headers. The output of the fine synchronization logic 80 facilitates frame acquisition by frame alignment logic 84. Proper framing alignment is important so that subsequent FFT processing provides an accurate conversion from the time to the frequency domain. The fine synchronization algorithm is based on the correlation between the received pilot signals carried by the headers and a local copy of the known pilot data. Once frame alignment acquisition occurs, the prefix of the OFDM symbol is removed with prefix removal logic 86 and resultant samples are sent to frequency offset correction logic 88, which compensates for the system frequency offset caused by the unmatched local oscillators in the transmitter and the receiver. Preferably, the synchronization logic 76 includes frequency offset and clock estimation logic 82, which is based on the headers to help estimate such effects on the transmitted signal and provide those estimations to the correction logic 88 to properly process OFDM symbols.

At this point, the OFDM symbols in the time domain are ready for conversion to the frequency domain using FFT processing logic 90. The results are frequency domain symbols, which are sent to processing logic 92. The processing logic 92 extracts the scattered pilot signal using scattered pilot extraction logic 94, determines a channel estimate based on the extracted pilot signal using channel estimation logic 96, and provides channel responses for all sub-carriers using channel reconstruction logic 98. In order to determine a channel response for each of the sub-carriers, the pilot signal is essentially multiple pilot symbols that are scattered among the data symbols throughout the OFDM sub-carriers in a known pattern in both time and frequency. Figure 6

Copy provided by USPTO from the IFW Image Database on 05/12/2005

illustrates an exemplary scattering of pilot symbols among available sub-carriers over a given time and frequency plot in an OFDM environment. Continuing with Figure 5, the processing logic compares the received pilot symbols with the pilot symbols that are expected in certain sub-carriers at certain times to determine a channel response for the sub-carriers in which pilot symbols were transmitted. The results are interpolated to estimate a channel response for most, if not all, of the remaining sub-carriers for which pilot symbols were not provided. The actual and interpolated channel responses are used to estimate an overall channel response, which includes the channel responses for most, if not all, of the sub-carriers in the OFDM channel.

The frequency domain symbols and channel reconstruction information, which are derived from the channel responses for each receive path are provided to an STC decoder 100, which provides STC decoding on both received paths to recover the transmitted symbols. The channel reconstruction information provides equalization information to the STC decoder 100 sufficient to remove the effects of the transmission channel when processing the respective frequency domain symbols

The recovered symbols are placed back in order using symbol de-interleaver logic 102, which corresponds to the symbol interleaver logic 58 of the transmitter. The de-interleaved symbols are then demodulated or de-mapped to a corresponding bitstream using de-mapping logic 104. The bits are then de-interleaved using bit de-interleaver logic 106, which corresponds to the bit interleaver logic 54 of the transmitter architecture. The de-interleaved bits are then processed by rate de-matching logic 108 and presented to channel decoder logic 110 to recover the initially scrambled data and the CRC checksum. Accordingly, CRC logic 112 removes the CRC checksum, checks the scrambled data in traditional fashion, and provides it to the de-scrambling logic 114 for de-scrambling using the known base station de-scrambling code to recover the originally transmitted data 116.

In parallel to recovering the data 116, a CQI, or at least information sufficient to create a CQI at the base station 14, is determined and transmitted to the base station 14. As noted above, the CQI in a preferred embodiment is a function of the carrier-to-interference ratio (CIR), as well as the degree to which the channel response varies across the various sub-carriers in the OFDM frequency band. For this embodiment, the channel gain for each sub-carrier in the OFDM frequency band being used to transmit information are compared relative to one another to determine the degree to which the channel gain varies across the OFDM frequency band. Although numerous techniques are available to measure the degree of variation, one technique is to calculate the standard deviation of the channel gain for each sub-carrier throughout the OFDM frequency band being used to transmit data.

Copy provided by USPTO from the IFW Image Database on 05/12/2005

WE CLAIM:

1. A method comprising:
   - Provisioning a plurality of frames for transmission to a terminal, said plurality of frames including resources;
   - Wherein for at least two frames said resources are allocated together

2. A method comprising:
   - Provisioning a plurality of frames for transmission to a basestation, said plurality of frames including resources;
   - Wherein for at least two frames said resources are allocated together

Copy provided by USPTO from the IFW Image Database on 05/12/2005

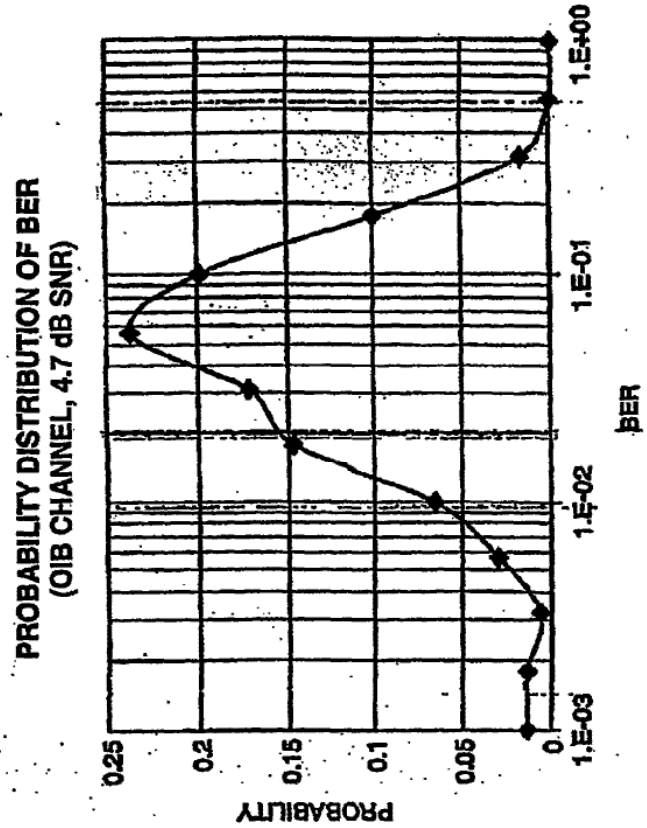

Figure 1

Copy provided by USPTO from the IFW Image Database on 05/12/2005

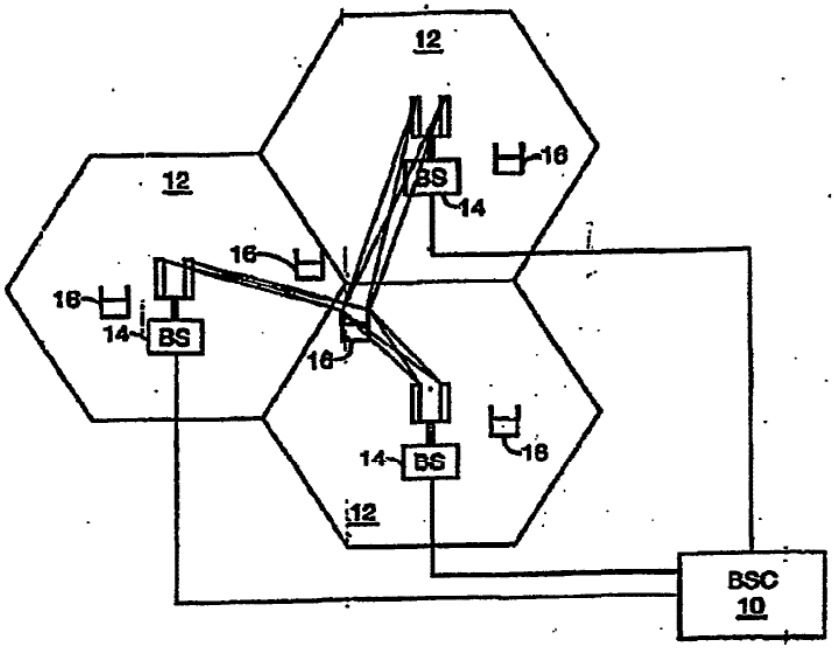

Figure 2

Copy provided by USPTO from the IFW Image Database on 05/12/2005

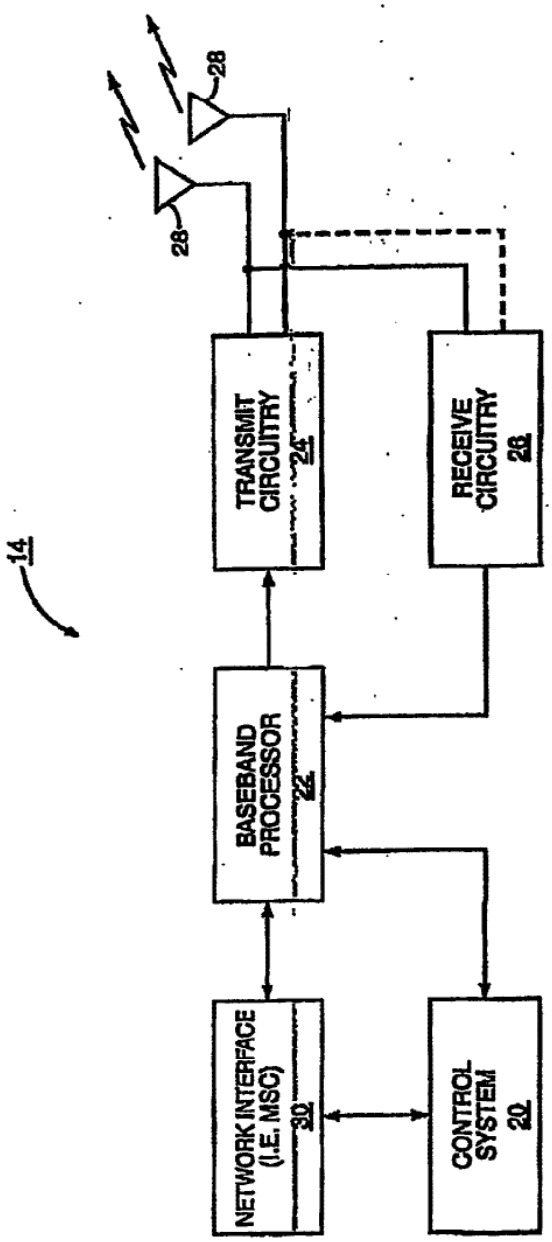

Figure 3

Copy provided by USPTO from the IFW Image Database on 05/12/2005

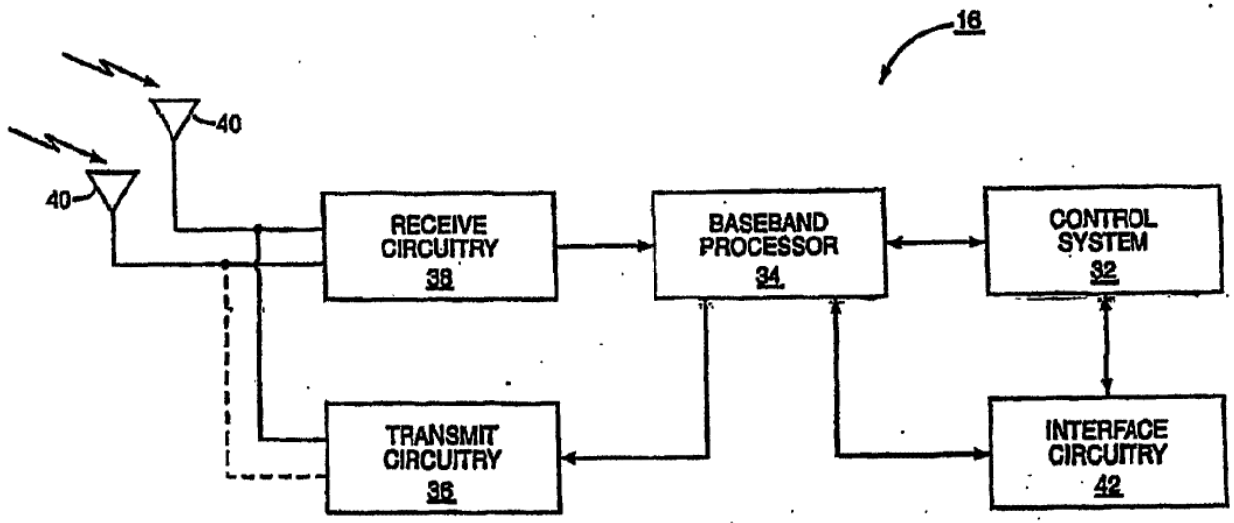

Figure 4

Copy provided by USPTO from the IFW Image Database on 05/12/2005

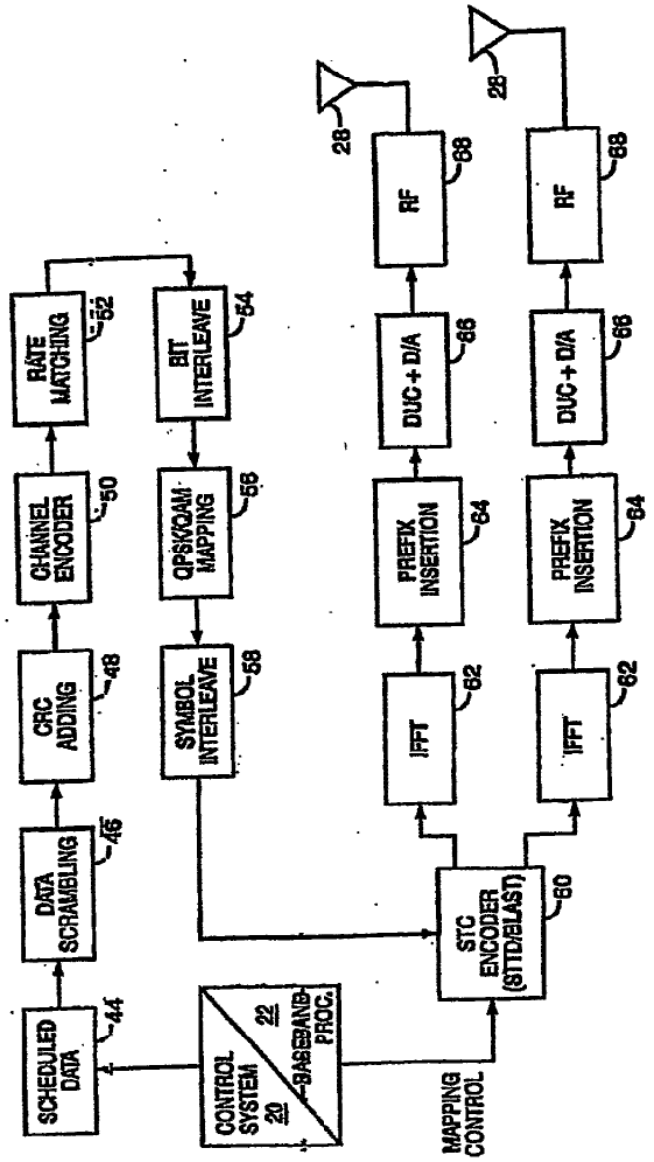

Figure 5

Copy provided by USPTO from the IFW Image Database on 05/12/2005

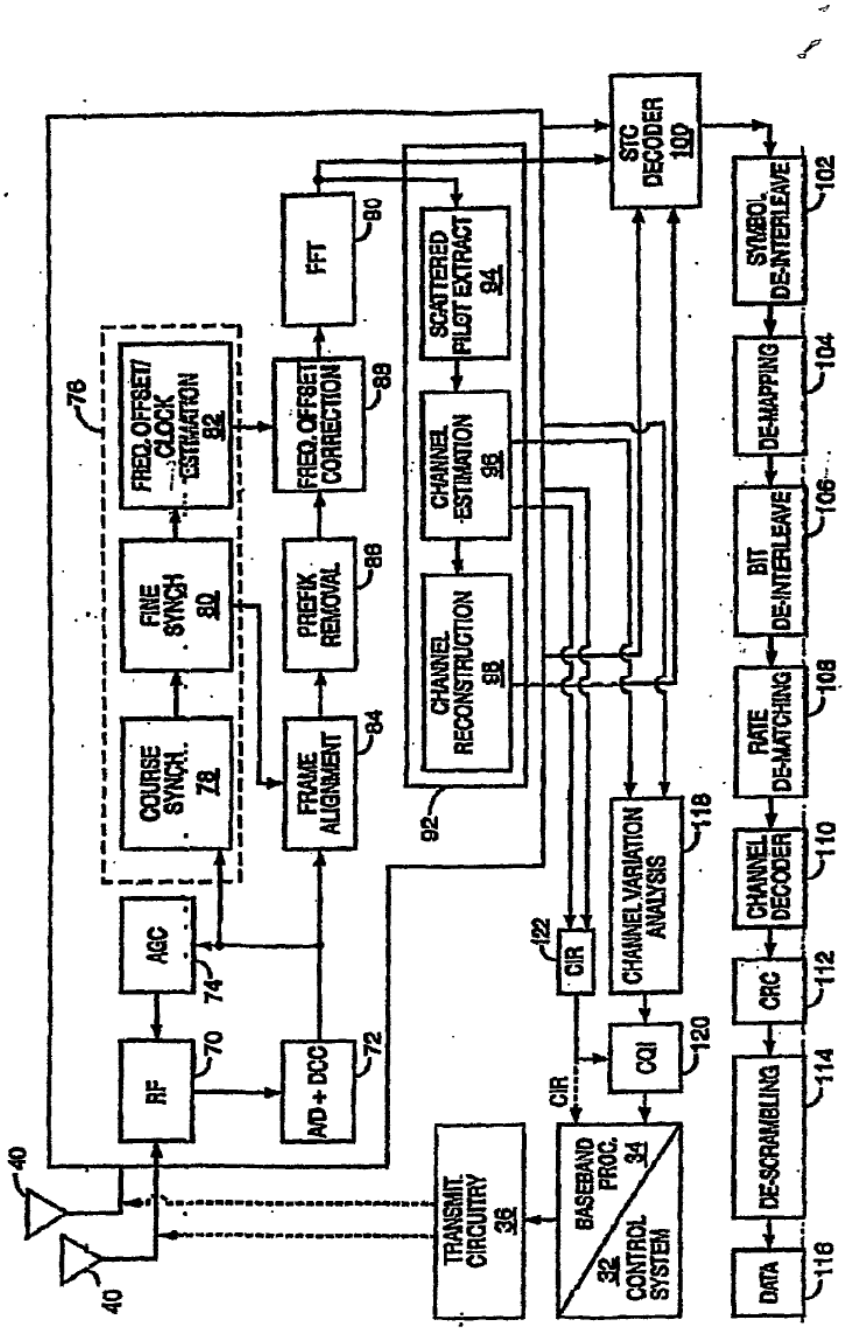

Figure 6

Copy provided by USPTO from the IFW Image Database on 05/12/2005

FEEDBACK HEADER SYSTEMS AND METHODS

Field of the Invention

This invention generally relates to the field of wireless communications. More specifically to uplink feedback Media Access Control (MAC) header systems and methods for broadband mobile wireless metropolitan area networks including networks operating according to the IEEE 802.16(e) standard.

Background of the Invention

In general, optimized downlink (DL) operations require feedback from an associated Mobile Subscriber Station (MSS). Those types of feedbacks include DL channel quality indication (CQI) feedback, DL MIMO (multiple input multiple output) mode and permutation selection, physical channel report, etc. There are also other feedbacks related to the uplink (UL) operation, such as MSS' UL transmit power headroom etc. The Mode Selection Feedback MAC header (as defined in 802.16e standard draft, p802.16e/D5) is one way of allowing an MSS to provide various feedback to the basestation (BS) on the UL.

In the current 802.16e standard draft (p802.16e/D5), two methods are described for a MSS to provide feedback on the UL. One method is to assign a dedicated UL feedback channel to the MSS. This dedicated channel can be used to provide CQI and other feedback in time-division-multiplex fashion. Another method is to use the Mode Selection Feedback MAC header (as defined in section 6.3.2.1.4 of p802.16e/D5). The Mode Selection Feedback header method enables a MSS to feedback more information at one time.

The Mode Selection feedback header can be used in the following scenarios when feedback information needs to be sent by a MSS:

- Scenario 1: a MSS can autonomously send the Mode Selection Feedback header to the BS by sending a bandwidth request ranging code and then send the header after receiving a CDMA_Allocation Information Element (IE).
- Scenario 2: BS can poll a MSS to send the required feedback and then the MSS sends the required feedback on the Mode Selection Feedback header.
- Scenario 3: a MSS can autonomously send the Mode Selection Feedback header to BS by sending the header along with UL traffic.

A need exists therefore for an improved feedback header.

In particular, with respect to scenario 2, in the current p802.16d/D5 standard draft, the DL FAST_FEEDBACK subheader can be used by the BS to poll a MSS to provide up to four types of feedbacks. To support various MIMO channel related feedback, and feedback to support UL operation, however, additional feedback types need to be defined. Also, a new polling signaling format needs to be defined to accommodate more than the existing four types of feedback.

In some scenarios, e.g., scenario 2 and 3, the CID (connection ID) is redundant since the Feedback header will be sent by a MSS in a dedicated channel.

Copy provided by USPTO from the IFW Image Database on 05/12/2005

Another problem is that the MAC header size current defined in the 802.16e draft standard is fixed at 48 bits. If the feedback content field size is small, therefore, a significant number of bits in the header are un-utilized.

Copy provided by USPTO from the IFW Image Database on 05/12/2005

Summary of the Invention

It is an object of the invention to remove the 16-bit CID field from a mode selection feedback MAC header and use the bit space for sending more feedback information in some scenarios.

It is another object of the invention to provide a feedback header system and method that can be used in accordance with the IEEE 802.16 standard.

It is another object of the invention to provide a feedback header system and method that is operable to:

1) support the option of CID field omission, thus more bit space is available to provide feedback information;
2) support additional types of feedback;
3) support multiple feedback types and associated content concatenated into the same feedback header

It is another object of the invention to provide a Feedback Polling Information Element (IE) (an IE including a control signaling sent from the BS to the MSS) to enable a BS to request a MSS to provide various types of feedback, in addition to the existing DL FAST_FEEDBACK sub-header polling method.

It is another object of the invention to provide a feedback header system and method that if the feedback content field size is small, the feedback header size may reduced to less than 48 bits.

It is another object of the invention to provide a reduced sized mode selection feedback MAC header system and method wherein the feedback MAC Header may be used when the MSS transmits the feedback header on unicast UL resource assigned by the BS. According to one embodiment of the invention the MAC header is half-sized (24-bit). According to another embodiment of the invention said feedback MAC Header may include:

- the CID field in the normal feedback header being omitted
- when sent alone without any other UL MAC PDU, Feedback MAC header may be duplicated to form a 48-bit block that enhances the reliability of the feedback.

It is another object of the invention to provide additional feedback types and feedback contents that can be sent by the MSS on the UL, through said reduced sized mode selection feedback MAC header.

Copy provided by USPTO from the IFW Image Database on 05/12/2005

Brief Description of the Figures

Figure 1(a) is a block diagram of a feedback header system and method in accordance with an embodiment of the invention

Figure 1(b) is a block diagram of a feedback header system and method in accordance with another embodiment of the invention

Figure 2 is a block diagram of a feedback header system and method in accordance with another embodiment of the invention.

Figure 3 is a block representation of a cellular communication system.

Figure 4 is a block representation of a base station according to one embodiment of the present invention.

Figure 5 is a block representation of a mobile terminal according to one embodiment of the present invention.

Figure 6 is a logical breakdown of an OFDM transmitter architecture according to one embodiment of the present invention.

Figure 7 is a logical breakdown of an OFDM receiver architecture according to one embodiment of the present invention.

Figure 8 illustrates a pattern of sub-carriers for carrying pilot symbols in an OFDM environment.

Detailed Description of Embodiments of the Invention

The following modification is based on IEEE standard p802.16e/D5 which is hereby incorporated by reference.

For scenarios 2 and 3 described above in the background of the invention, since the header is sent using unicast UL resource assigned by the BS, the connection identifier (CID) field in the existing Mode Selection Feedback header is redundant since the unicast UL resource uniquely identifies the MSS. Thus, the 16-bit CID field in the header can be removed and the bit space used for sending more feedback information.

In accordance with an embodiment of the invention Figure 1 shows a Mode Selection Feedback PDU (protocol data unit) including a Feedback header. In accordance with another embodiment of the invention, Mode Selection Feedback PDU does not contain a payload. A PDU in accordance with embodiments of the invention are shown with and without a CID field in Figures 1(a) and (b) respectively.

In accordance with an embodiment of the invention Feedback header (Figure 1) includes the following properties:

a) The length of the header is 6 bytes.
b) The HT field is set to 1 and the EC field is set to 1, indicating the feedback header type.
c) The N/M field (Normal feedback header/Mini feedback header indication) as described below is set to 0 to indicate that this is a normal sized Feedback header

Copy provided by USPTO from the IFW Image Database on 05/12/2005

d) The Feedback Type field is set according to Table 7b.
e) The CII field (CID Inclusion Indication) is set to 0 for the header with CID field and set to 1 for the header without CID field.
f) The Feedback Content field shall be set accordingly based on the value of the feedback type field.

In accordance with an embodiment of the invention Feedback header (Figure 1) is used by MSS to provide feedback(s). A Mss receiving a Feedback header on the downlink discards the PDU.

Feedback types in accordance with embodiments of the invention are shown in Table 1.

Table 1 -- Feedback Type and feedback content

Feedback Type	Feedback contents	Description
0b0000	Set as described in table 296a.	MIMO mode and permutation. Feedback
0b0001	DL average CQI (5bits)	5 bits CQI feedback
0b0010	Antenna index (2 bits) + MIMO coefficients (5 bits, 8.4.5.4.10.6)	MIMO coefficients feedback
0b0011	Preferred-DIUC (4 bits)	Preferred DL channel DIUC feedback
0b0100	UL-TX-Power (7 bits) (see table 7a)	UP transmission power
0b0101	Preferred DIUC(4 bits) + UL-TX-Power(7 bits) + UL-headroom (6 bits) (see Table 7a)	PHY channel feedback
0b0110	Number of groups, A (2 bits) + A occurrences of 'group index (2 bits) + CQI (5 bits)'	CQIs of antenna groups
0b0111	Number of bands, B (2 bits) + B occurences of 'band index (6 bits) + CQI (5 bits)'	Multiple Band of CQI
0b1000	Number of feedback types, C (2 bits) + C occurences of 'feedback type (4bits) + feedback content (variable)'	Multiple types of feedback
0b1001-0b1111	Reserved for future use	

Table 2 shows an a Feedback Polling IE format in accordance with an embodiment of the invention.

This IE may be used by BS to allocate dedicated UL resource to obtain certain types of feedback from one or

Copy provided by USPTO from the IFW Image Database on 05/12/2005

more MSS.

Table 2 – Feedback_polling IE format

Syntax	Size	Notes
Feedback_polling IE () {		
Extended UIUC	4 bits	0x??
Length	4 bits	Length in bytes of following fields
for (i=0; i < Num_Allocations; i++)		
{		
Basic CID	16 bits	
UIUC		
Feedback_type	6 bits	See Table 7b
Allocation_offset	3 bits	The UP feedback shall be transmitted in the frame which is 0-8 frame delay relative to the current frame.
Duration	10 bits	In OFDMA slots (see 8.4.3.1)
}		
}		

According to another embodiment of the invention there is provided a feedback header of reduced size. According to one embodiment of the invention this reduced size Feedback PDU includes a Mini Feedback header and does not contain a payload. A reduced size feedback header in accordance with an embodiment of the invention is shown in Figure 2.

According to one embodiment of the invention a reduced size feedback header may have the following properties:

g) The length of the header is 3 bytes.
h) The HT field is set to 1 and the EC field is set to 1, which indicates the feedback header type.
i) The N/M field (Normal feedback header/Mini feedback header indication) is set to 1 to indicate that this is a half-sized Feedback header
j) The Feedback Type field is set according to Table 7b.
k) The Feedback Content field is set based on the value of the feedback type field.

Table 3 presents feedback types and feedback content in accordance with an embodiment of the invention.

Table 3 Feedback Type and feedback content

Copy provided by USPTO from the IFW Image Database on 05/12/2005

Feedback Type	Feedback contents	Decsription
0b0000	Set as described in table 296a.	MIMO mode and permutation. Feedback
0b0001	DL average CQI (5bits)	5 bits CQI feedback
0b0010	Antenna index (2 bits) + MIMO coefficients (5 bits, 8.4.5.4.10.6)	MIMO coefficients feedback
0b0011	Preferred-DIUC (4 bits)	Preferred DL channel DIUC feedback
0b0100	UL-TX-Power (7 bits) (see table 7a)	UP transmission power
0b0101	Preferred DIUC(4 bits) + UL-TX-Power(7 bits) + UL-headroom (6 bits) (see Table 7a)	PHY channel feedback
0b0110	Number of groups, A (2 bits) + A occurrences of 'group index (2 bits) + CQI (5 bits)'	CQIs of antenna groups
0b0111	Number of bands, B (2 bits) + B occurences of 'band index (6 bits) + CQI (5 bits)'	Multiple Band of CQI
0b1000	Number of feedback types, C (2 bits) + C occurences of 'feedback type (4bits) + feedback content (variable)'	Multiple types of feedback
0b1001-0b1111	Reserved for future use	

When a MSS sends feedback header on unicast UL resource, the MSS may decide the size of the feedback header (i.e. Normal Feedback Header or reduced sized Feedback Header) based on the feedback type and the amount of information to feed back.

With reference to Figure 3, a base station controller (BSC) 10 controls wireless communications within multiple cells 12, which are served by corresponding base stations (BS) 14. In general, each base station 14 facilitates communications using OFDM with mobile terminals 16, which are within the cell 12 associated with the corresponding base station 14. The movement of the mobile terminals 16 in relation to the base stations 14 results in significant fluctuation in channel conditions. As illustrated, the base stations 14 and mobile terminals 16 may include multiple antennas to provide spatial diversity for communications.

A high level overview of the mobile terminals 16 and base stations 14 of the present invention is provided prior to delving into the structural and functional details of the preferred embodiments. With reference to Figure 4, a

Copy provided by USPTO from the IFW Image Database on 05/12/2005

base station 14 configured according to one embodiment of the present invention is illustrated. The base station 14 generally includes a control system 20, a baseband processor 22, transmit circuitry 24, receive circuitry 26, multiple antennas 28, and a network interface 30. The receive circuitry 26 receives radio frequency signals bearing information from one or more remote transmitters provided by mobile terminals 16 (illustrated in Figure 5). Preferably, a low noise amplifier and a filter (not shown) cooperate to amplify and remove broadband interference from the signal for processing. Downconversion and digitization circuitry (not shown) will then downconvert the filtered, received signal to an intermediate or baseband frequency signal, which is then digitized into one or more digital streams.

The baseband processor 22 processes the digitized received signal to extract the information or data bits conveyed in the received signal. This processing typically comprises demodulation, decoding, and error correction operations. As such, the baseband processor 22 is generally implemented in one or more digital signal processors (DSPs) or application-specific integrated circuits (ASICs). The received information is then sent across a wireless network via the network interface 30 or transmitted to another mobile terminal 16 serviced by the base station 14.

On the transmit side, the baseband processor 22 receives digitized data, which may represent voice, data, or control information, from the network interface 30 under the control of control system 20, and encodes the data for transmission. The encoded data is output to the transmit circuitry 24, where it is modulated by a carrier signal having a desired transmit frequency or frequencies. A power amplifier (not shown) will amplify the modulated carrier signal to a level appropriate for transmission, and deliver the modulated carrier signal to the antennas 28 through a matching network (not shown). Modulation and processing details are described in greater detail below.

With reference to Figure 5, a mobile terminal 16 configured according to one embodiment of the present invention is illustrated. Similarly to the base station 14, the mobile terminal 16 will include a control system 32, a baseband processor 34, transmit circuitry 36, receive circuitry 38, multiple antennas 40, and user interface circuitry 42. The receive circuitry 38 receives radio frequency signals bearing information from one or more base stations 14. Preferably, a low noise amplifier and a filter (not shown) cooperate to amplify and remove broadband interference from the signal for processing. Downconversion and digitization circuitry (not shown)

Copy provided by USPTO from the IFW Image Database on 05/12/2005

will then downconvert the filtered, received signal to an intermediate or baseband frequency signal, which is then digitized into one or more digital streams.

The baseband processor 34 processes the digitized received signal to extract the information or data bits conveyed in the received signal. This processing typically comprises demodulation, decoding, and error correction operations, as will be discussed on greater detail below. The baseband processor 34 is generally implemented in one or more digital signal processors (DSPs) and application specific integrated circuits (ASICs).

For transmission, the baseband processor 34 receives digitized data, which may represent voice, data, or control information, from the control system 32, which it encodes for transmission. The encoded data is output to the transmit circuitry 36, where it is used by a modulator to modulate a carrier signal that is at a desired transmit frequency or frequencies. A power amplifier (not shown) will amplify the modulated carrier signal to a level appropriate for transmission, and deliver the modulated carrier signal to the antennas 40 through a matching network (not shown). Various modulation and processing techniques available to those skilled in the art are applicable to the present invention.

In OFDM modulation, the transmission band is divided into multiple, orthogonal carrier waves. Each carrier wave is modulated according to the digital data to be transmitted. Because OFDM divides the transmission band into multiple carriers, the bandwidth per carrier decreases and the modulation time per carrier increases. Since the multiple carriers are transmitted in parallel, the transmission rate for the digital data, or symbols, on any given carrier is lower than when a single carrier is used.

OFDM modulation requires the performance of an Inverse Fast Fourier Transform (IFFT) on the information to be transmitted. For demodulation, the performance of a Fast Fourier Transform (FFT) on the received signal is required to recover the transmitted information. In practice, the IFFT and FFT are provided by digital signal processing carrying out an Inverse Discrete Fourier Transform (IDFT) and Discrete Fourier Transform (DFT), respectively. Accordingly, the characterizing feature of OFDM modulation is that orthogonal carrier waves are generated for multiple bands within a transmission channel. The modulated signals are digital signals having a relatively low transmission rate and capable of staying within their respective bands. The individual carrier

Copy provided by USPTO from the IFW Image Database on 05/12/2005

waves are not modulated directly by the digital signals. Instead, all carrier waves are modulated at once by IFFT processing.

In the preferred embodiment, OFDM is used for at least the downlink transmission from the base stations 14 to the mobile terminals 16. Each base station 14 is equipped with *n* transmit antennas 28, and each mobile terminal 16 is equipped with *m* receive antennas 40. Notably, the respective antennas can be used for reception and transmission using appropriate duplexers or switches and are so labeled only for clarity.

With reference to Figure 6, a logical OFDM transmission architecture is provided according to one embodiment. Initially, the base station controller 10 will send data to be transmitted to various mobile terminals 16 to the base station 14. The base station 14 may use the CQIs associated with the mobile terminals to schedule the data for transmission as well as select appropriate coding and modulation for transmitting the scheduled data. The CQIs may be directly from the mobile terminals 16 or determined at the base station 14 based on information provided by the mobile terminals 16. In either case, the CQI for each mobile terminal 16 is a function of the degree to which the channel amplitude (or response) varies across the OFDM frequency band.

The scheduled data 44, which is a stream of bits, is scrambled in a manner reducing the peak-to-average power ratio associated with the data using data scrambling logic 46. A cyclic redundancy check (CRC) for the scrambled data is determined and appended to the scrambled data using CRC adding logic 48. Next, channel coding is performed using channel encoder logic 50 to effectively add redundancy to the data to facilitate recovery and error correction at the mobile terminal 16. Again, the channel coding for a particular mobile terminal 16 is based on the CQI. The channel encoder logic 50 uses known Turbo encoding techniques in one embodiment. The encoded data is then processed by rate matching logic 52 to compensate for the data expansion associated with encoding.

Bit interleaver logic 54 systematically reorders the bits in the encoded data to minimize the loss of consecutive data bits. The resultant data bits are systematically mapped into corresponding symbols depending on the chosen baseband modulation by mapping logic 56. Preferably, Quadrature Amplitude Modulation (QAM) or Quadrature Phase Shift Key (QPSK) modulation is used. The degree of modulation is preferably chosen based on the CQI for the particular mobile terminal. The symbols may be systematically reordered to further bolster

Copy provided by USPTO from the IFW Image Database on 05/12/2005

the immunity of the transmitted signal to periodic data loss caused by frequency selective fading using symbol interleaver logic 58.

At this point, groups of bits have been mapped into symbols representing locations in an amplitude and phase constellation. When spatial diversity is desired, blocks of symbols are then processed by space-time block code (STC) encoder logic 60, which modifies the symbols in a fashion making the transmitted signals more resistant to interference and more readily decoded at a mobile terminal 16. The STC encoder logic 60 will process the incoming symbols and provide n outputs corresponding to the number of transmit antennas 28 for the base station 14. The control system 20 and/or baseband processor 22 will provide a mapping control signal to control STC encoding. At this point, assume the symbols for the n outputs are representative of the data to be transmitted and capable of being recovered by the mobile terminal 16. See A.F. Naguib, N. Seshadri, and A.R. Calderbank, "Applications of space-time codes and interference suppression for high capacity and high data rate wireless systems," Thirty-Second Asilomar Conference on Signals, Systems & Computers, Volume 2, pp. 1803-1810, 1998, which is incorporated herein by reference in its entirety.

For the present example, assume the base station 14 has two antennas 28 (n=2) and the STC encoder logic 60 provides two output streams of symbols. Accordingly, each of the symbol streams output by the STC encoder logic 60 is sent to a corresponding IFFT processor 62, illustrated separately for ease of understanding. Those skilled in the art will recognize that one or more processors may be used to provide such digital signal processing, alone or in combination with other processing described herein. The IFFT processors 62 will preferably operate on the respective symbols to provide an inverse Fourier Transform. The output of the IFFT processors 62 provides symbols in the time domain. The time domain symbols are grouped into frames, which are associated with a prefix by like insertion logic 64. Each of the resultant signals is up-converted in the digital domain to an intermediate frequency and converted to an analog signal via the corresponding digital up-conversion (DUC) and digital-to-analog (D/A) conversion circuitry 66. The resultant (analog) signals are then simultaneously modulated at the desired RF frequency, amplified, and transmitted via the RF circuitry 68 and antennas 28. Notably, pilot signals known by the intended mobile terminal 16 are scattered among the sub-carriers. The mobile terminal 16, which is discussed in detail below, will use the pilot signals for channel estimation.

Copy provided by USPTO from the IFW Image Database on 05/12/2005

Reference is now made to Figure 7 to illustrate reception of the transmitted signals by a mobile terminal 16. Upon arrival of the transmitted signals at each of the antennas 40 of the mobile terminal 16, the respective signals are demodulated and amplified by corresponding RF circuitry 70. For the sake of conciseness and clarity, only one of the two receive paths is described and illustrated in detail. Analog-to-digital (A/D) converter and down-conversion circuitry 72 digitizes and downconverts the analog signal for digital processing. The resultant digitized signal may be used by automatic gain control circuitry (AGC) 74 to control the gain of the amplifiers in the RF circuitry 70 based on the received signal level.

Initially, the digitized signal is provided to synchronization logic 76, which includes coarse synchronization logic 78, which buffers several OFDM symbols and calculates an auto-correlation between the two successive OFDM symbols. A resultant time index corresponding to the maximum of the correlation result determines a fine synchronization search window, which is used by fine synchronization logic 80 to determine a precise framing starting position based on the headers. The output of the fine synchronization logic 80 facilitates frame acquisition by frame alignment logic 84. Proper framing alignment is important so that subsequent FFT processing provides an accurate conversion from the time to the frequency domain. The fine synchronization algorithm is based on the correlation between the received pilot signals carried by the headers and a local copy of the known pilot data. Once frame alignment acquisition occurs, the prefix of the OFDM symbol is removed with prefix removal logic 86 and resultant samples are sent to frequency offset correction logic 88, which compensates for the system frequency offset caused by the unmatched local oscillators in the transmitter and the receiver. Preferably, the synchronization logic 76 includes frequency offset and clock estimation logic 82, which is based on the headers to help estimate such effects on the transmitted signal and provide those estimations to the correction logic 88 to properly process OFDM symbols.

At this point, the OFDM symbols in the time domain are ready for conversion to the frequency domain using FFT processing logic 90. The results are frequency domain symbols, which are sent to processing logic 92. The processing logic 92 extracts the scattered pilot signal using scattered pilot extraction logic 94, determines a channel estimate based on the extracted pilot signal using channel estimation logic 96, and provides channel responses for all sub-carriers using channel reconstruction logic 98. In order to determine a channel response for each of the sub-carriers, the pilot signal is essentially multiple pilot symbols that are scattered among the data symbols throughout the OFDM sub-carriers in a known pattern in both time and frequency. Figure 8 illustrates an exemplary scattering of pilot symbols among available sub-carriers over a given time and

Copy provided by USPTO from the IFW Image Database on 05/12/2005

frequency plot in an OFDM environment. Continuing with Figure 7, the processing logic compares the received pilot symbols with the pilot symbols that are expected in certain sub-carriers at certain times to determine a channel response for the sub-carriers in which pilot symbols were transmitted. The results are interpolated to estimate a channel response for most, if not all, of the remaining sub-carriers for which pilot symbols were not provided. The actual and interpolated channel responses are used to estimate an overall channel response, which includes the channel responses for most, if not all, of the sub-carriers in the OFDM channel.

The frequency domain symbols and channel reconstruction information, which are derived from the channel responses for each receive path are provided to an STC decoder 100, which provides STC decoding on both received paths to recover the transmitted symbols. The channel reconstruction information provides equalization information to the STC decoder 100 sufficient to remove the effects of the transmission channel when processing the respective frequency domain symbols

The recovered symbols are placed back in order using symbol de-interleaver logic 102, which corresponds to the symbol interleaver logic 58 of the transmitter. The de-interleaved symbols are then demodulated or de-mapped to a corresponding bitstream using de-mapping logic 104. The bits are then de-interleaved using bit de-interleaver logic 106, which corresponds to the bit interleaver logic 54 of the transmitter architecture. The de-interleaved bits are then processed by rate de-matching logic 108 and presented to channel decoder logic 110 to recover the initially scrambled data and the CRC checksum. Accordingly, CRC logic 112 removes the CRC checksum, checks the scrambled data in traditional fashion, and provides it to the de-scrambling logic 114 for de-scrambling using the known base station de-scrambling code to recover the originally transmitted data 116.

In parallel to recovering the data 116, a CQI, or at least information sufficient to create a CQI at the base station 14, is determined and transmitted to the base station 14. As noted above, the CQI in a preferred embodiment is a function of the carrier-to-interference ratio (CIR), as well as the degree to which the channel response varies across the various sub-carriers in the OFDM frequency band. For this embodiment, the channel gain for each sub-carrier in the OFDM frequency band being used to transmit information are compared relative to one another to determine the degree to which the channel gain varies across the OFDM frequency band. Although numerous techniques are available to measure the degree of variation, one technique is to calculate the standard

Copy provided by USPTO from the IFW Image Database on 05/12/2005

deviation of the channel gain for each sub-carrier throughout the OFDM frequency band being used to transmit data.

Copy provided by USPTO from the IFW Image Database on 05/12/2005

WE CLAIM:

1. A method comprising:
   - Provisioning a protocol data unit including a header for transmission to a base station;
   - Wherein CID bits in said header are replaced at least in part by feedback content bits

Copy provided by USPTO from the IFW Image Database on 05/12/2005

Figure 1(a)

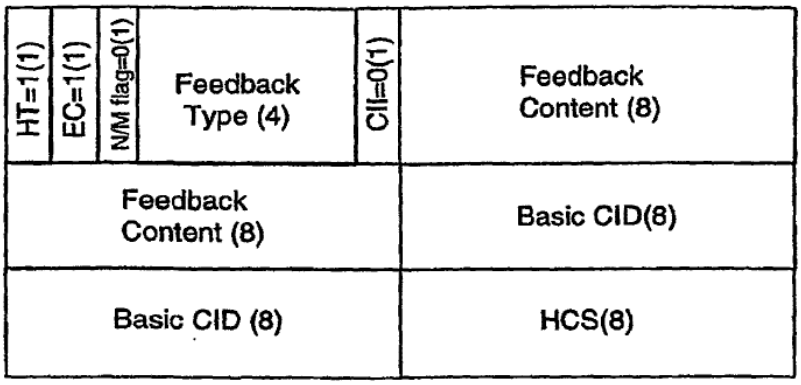

Figure 1(b)

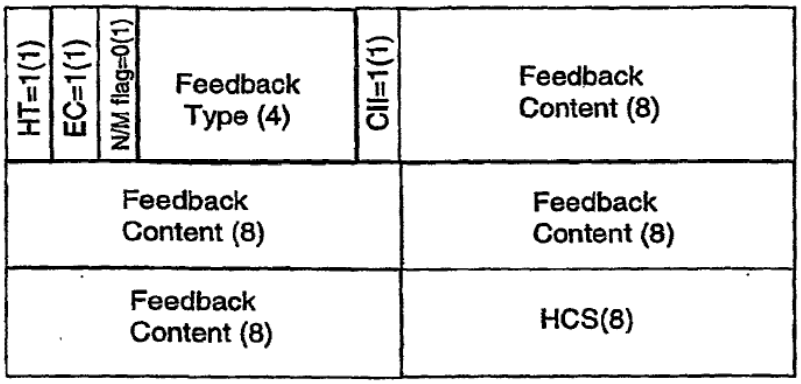

Figure 2

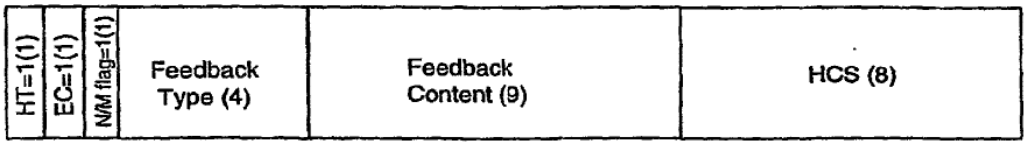

Copy provided by USPTO from the IFW Image Database on 05/12/2005

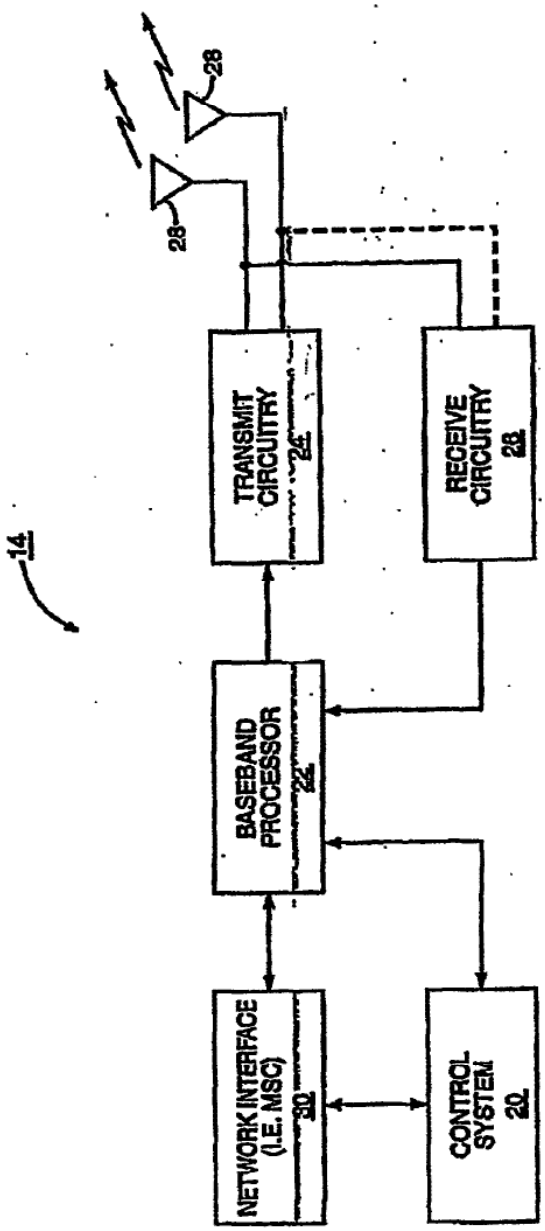

Figure 3

Copy provided by USPTO from the IFW Image Database on 05/12/2005

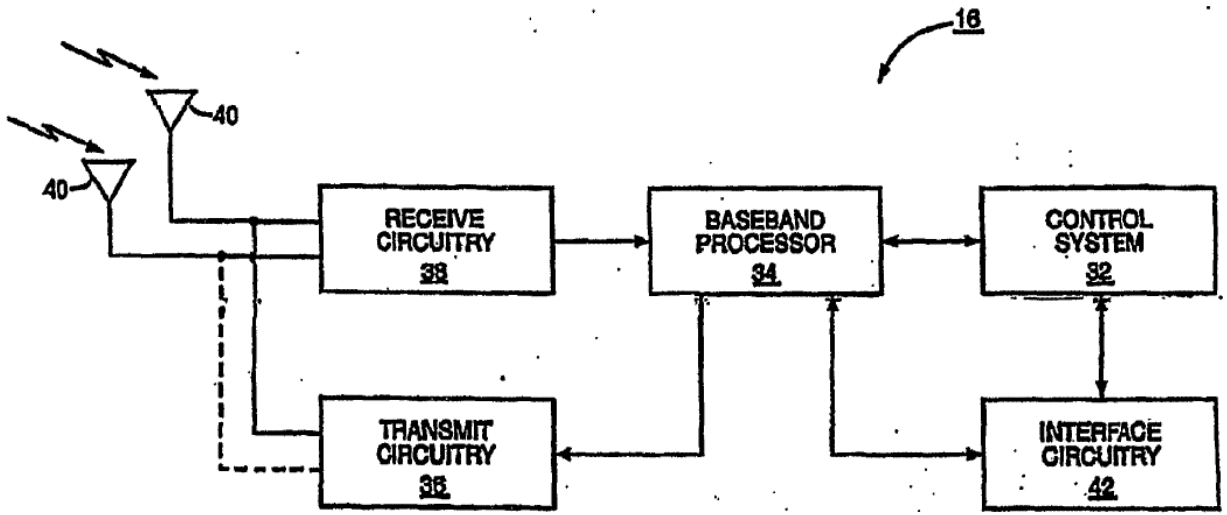

Figure 4

Copy provided by USPTO from the IFW Image Database on 05/12/2005

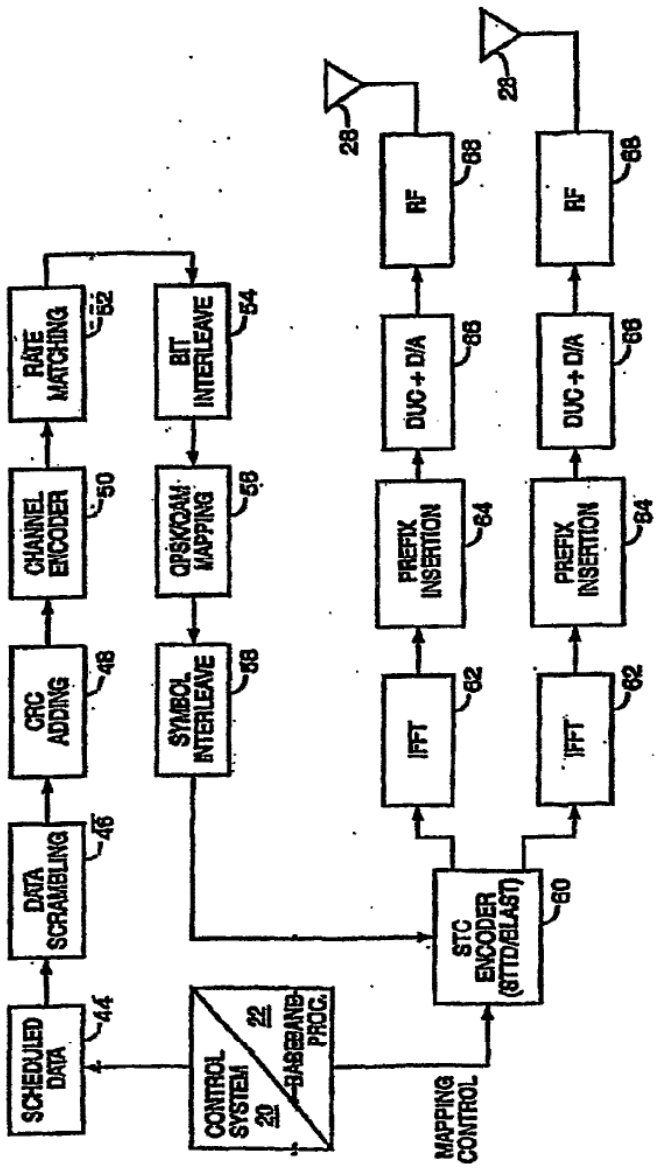

Figure 5

Copy provided by USPTO from the IFW Image Database on 05/12/2005

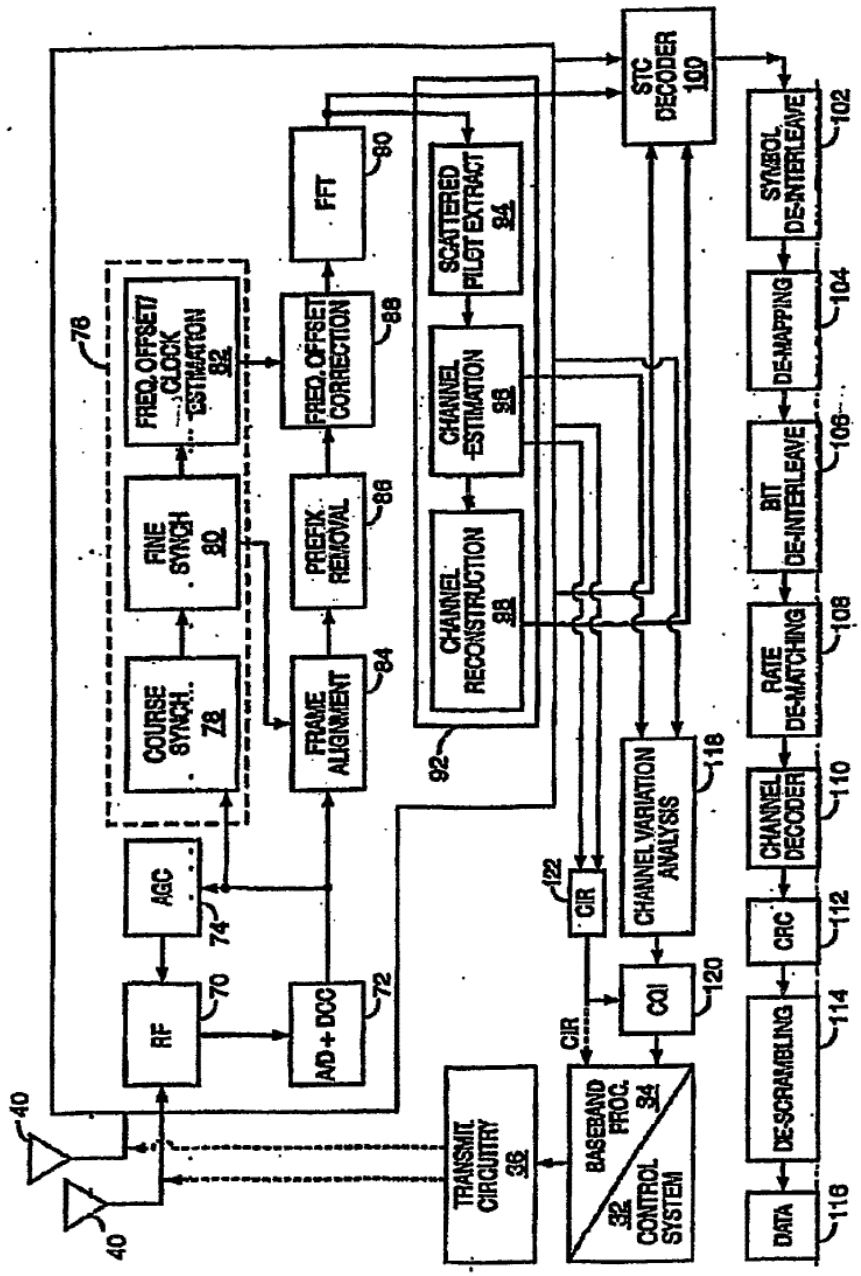

Figure 6

Copy provided by USPTO from the IFW Image Database on 05/12/2005

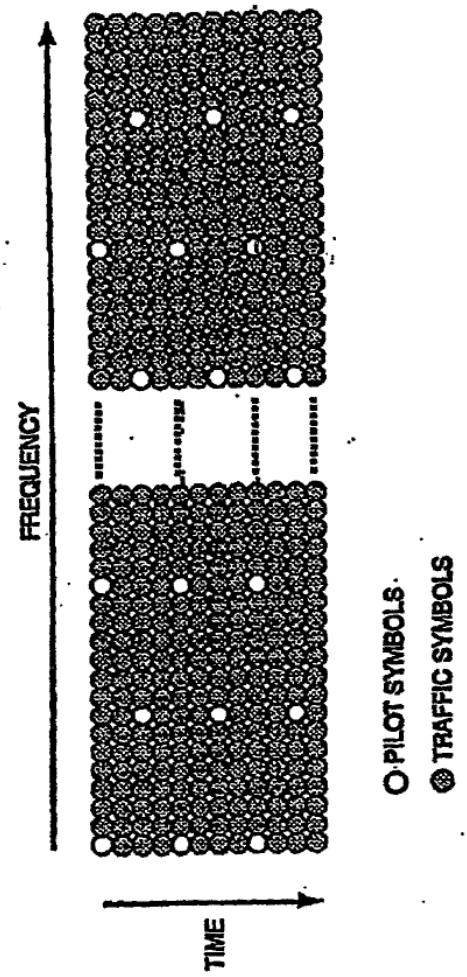

Figure 7

Copy provided by USPTO from the IFW Image Database

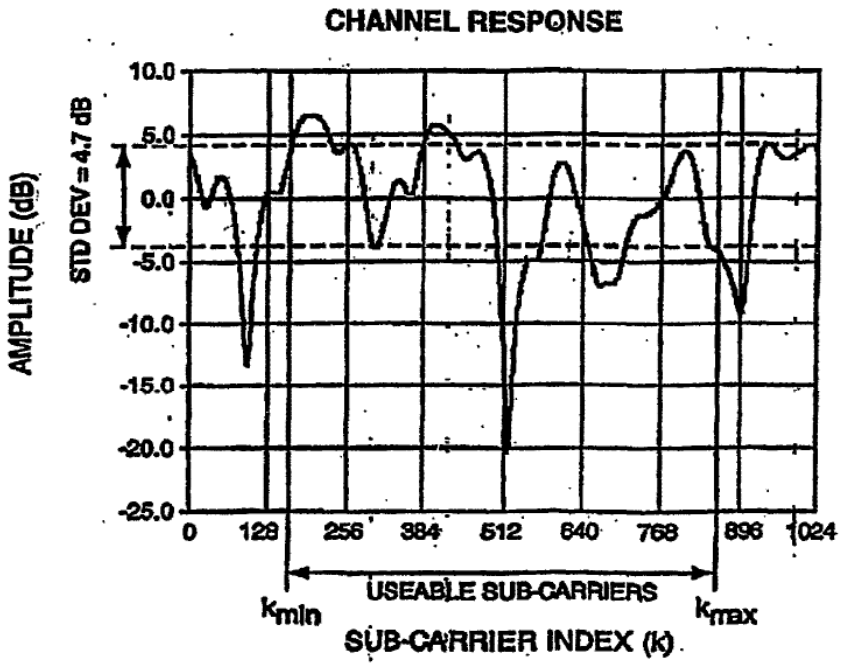
CHANNEL RESPONSE
AMPLITUDE (dB)
STD DEV = 4.7 dB
10.0
5.0
0.0
-5.0
-10.0
-15.0
-20.0
-25.0
0
128
256
384
512
640
768
896
1024
USEABLE SUB-CARRIERS
k_{min}
k_{max}
SUB-CARRIER INDEX (k)

Figure 8

HIERARCHICAL MAP STRUCTURE SYSTEMS AND METHODS

Field of the Invention

This invention generally relates to the field of wireless communications. More specifically to MAP structure systems and methods for broadband mobile wireless metropolitan area networks including networks operating according to the IEEE 802.16(e) standard.

Background of the Invention

In the current 802.16e draft standard (p802.16e/D5), downlink (DL) and uplink (UL) resource or data burst assignment is performed by layer 2 or MAC (medium access control) control messages called DL/UL-MAP messages. The DL/UL-MAP messages are encapsulated in the physical layer OFDMA region called the DL/UL-MAP region. Each DL/UL-MAP region contains one DL/UL-MAP message. Within the DL/UL MAP message, there are one or more broadcast, multicast or unicast information elements (IE) that contain information for one or more Mobile Subscriber Station (MSS). The IEs are used for, among other things, assigning DL/UL OFDMA regions for Mobile Subscriber Stations MSS to receive/transmit DL/UL traffic or MAC messages.

The current DL/UL-MAP designs have many shortcomings including the following.

First, there is no more room to define new IEs due to the limited number of IE type indicators, called the Downlink Interval Usage Code (DIUC) and Uplink Interval Usage Code (UIUC). The DIUC/UIUC is 4 bits in length, thus allowing only up to 16 types of IEs. To alleviate the problem, one of the DIUC/UIUC value (i.e. 15) is reserved for extending the IE types. When DIUC/UIUC is set to 15, an extended DIUC/UIUC (also 4 bits) is included to indicate up to an additional 16 new IE types. Currently, in the draft standard, all the 15 plus 16, i.e. 31 DIUC/UIUC values have been used. Therefore, new IEs cannot be introduced.

Second, there is no explicit indication of whether a broadcast IE is designated to all MSS or only those MSSs in certain modes of operation (Normal, Sleep or Idle).

As will be apparent to one skilled in the art an MSS can be in Normal mode, Sleep mode or Idle Mode. A MSS in Normal mode continuously processes the DL/UL-MAP and can be assigned DL or UL resource or burst at any time. A MSS in sleep mode operates in cycles of sleep interval and listening interval. During the sleep interval, the MSS is not available to the Base Station for DL traffic. The MSS may initiate UL traffic transmission during sleep interval. During listening interval, the MSS operates as in Normal mode. Sleep mode reduces the MSS battery consumption compared to Normal mode. For Idle mode, the MSS is not available for DL traffic and cannot initiate UL traffic. The MSS does not perform HO. The MSS listens to the paging signalling from the BS during designated paging interval. Idle Mode therefore provides the most power saving for the MSS.

When a MSS is in Sleep mode – listening interval, or Idle Mode – paging interval, the MSS needs to decode the DL MAP in order to receive unicast traffic (for sleep mode) or relevant broadcast traffic (for both sleep mode and idle mode). However, when the MSS receives an IE with broadcast connection identifier (broadcast CID), the MSS has to demodulate and decode the DL OFDMA region assigned by this IE, even though the DL broadcast traffic carried in that OFDMA region is not designated to the MSS which operates in certain mode. This is not power efficient for MSS in Sleep and Idle Modes since the MSS has to demodulate and decode all

Copy provided by USPTO from the IFW Image Database on 05/12/2005

DL broadcast traffic or messages.

The current DL and UL IEs are encapsulated in separate DL and UL MAP. For the case of unicast burst assignment to the same MSS on both DL and UL, the 16-bit basic connection identifier (basic CID) of that MSS will appear twice, once in the DL-MAP and a second time in the UL-MAP. This causes unnecessary overhead.

According to the current design, a MSS in either normal mode, sleep mode – listening interval or Idle mode – paging interval have to demodulate and decode all the DL and UL MAP regions and associated messages, even though many of the information contained in the MAPs region is not designated to that MSS. The DL and UL MAP regions may be long and span multiple OFDMA symbols, thus is not power efficient for as MSS in Idle mode and Sleep mode.

Copy provided by USPTO from the IFW Image Database on 05/12/2005

Summary of the Invention

It is an object of the invention to provide a system and method for providing hierarchical MAP structures for broadband mobile wireless metropolitan area networks. According to one embodiment of the invention such networks include networks operating in accordance with the IEEE 802.16 standard.

It is an object of the invention to provide a system and method for providing hierarchical MAP structures that does not impact the operation of 802.16d MSS and should be transparent to the 802.16d MSS.

It is an object of the invention to provide a system and method for providing hierarchical MAP structures generally in accordance with the Figure 1.

It is a further object of the invention to provide a system and method for providing hierarchical MAP structures wherein a DL-MAP is placed adjacent to the Frame Control Header (FCH) as in the current 802.16d standard, for the purpose of backward compatibility. Since this DL-MAP may be processed by MSSs who intend to listen to DL traffic or messages including MSSs in Normal mode, MSSs in Sleep mode / listening interval, and MSS in Idle mode / Paging interval, this DL-MAP may be used as the Root MAP to perform the following:

- Point to additional DL/UL-MAPs which only need to be processed by specific groups of MSS.
    - According to aspects of the invention, the additional MAPs include 1) MAP for UL common access for all 802.16d SS (Subscriber Station) and 802.16e MSS. This MAP may processed by all 802.16d SS and 802.16e MSS that intends to perform UL access; 2) Unicast DL/UL MAP for all 802.16d SS. This MAP may be processed by all power-on and registered SS; and 3) Unicast DL/UL MAP for all 802.16e MSS in Normal mode and Sleep mode / listening interval. This MAP may be processed by all 802.16e MSS in Normal mode or Sleep mode / listening interval. In this way, a particular type of MSS only needs to process the corresponding MAP IEs instead of having to process all the MAP IEs.

- Point to regions for DL broadcast messages.
    - According to aspects of the invention, the broadcast regions may be divided into four types: 1) region containing broadcast messages for all 802.16d SS and 802.16e MSS, e.g. system parameter broadcast (UCD, DCD) messages; 2) region containing broadcast messages for all 802.16e MSS, e.g. neighbor BS information advertisement (MOB-NBR-ADV) message; 3) region containing broadcast messages for all Sleep mode MSS, e.g. traffic indication (MOB-TRF-IND) message; 4) region containing broadcast messages for all Idle mode MSS, e.g. paging advertisement (MOB-PAG-ADV) message. In this way, a MSS operating in certain mode may only need to process the corresponding region and messages instead of having to process all broadcast regions and messages.

- Point to regions for multicast-broadcast service (MBS) traffic. A particular MBS region may be demodulated and decoded by MSS that are subscribed to the associated MBS.

- Contain DL IEs that are addressed to both 802.16d SS and 802.16e MSS, e.g. MIMO_DL_Basic_IE etc.

It is an object of the invention to provide a system and method for providing hierarchical MAP structures

Copy provided by USPTO

which include a MAP message (Enhanced MAP (EN-MAP)) that includes unicast IEs for all 802.16e MSS in Normal mode or Sleep mode / listening interval. In accordance with one aspect of the invention, the characteristics of the EN-MAP message include as follows:

- No generic MAC header when this EN-MAP message is transmitted
- A EN-MAP message contains one or more EN-MAP_IE.
- Each EN-MAP_IE contains an IE type field of 6 bits. This allows a larger number of types of IEs that can be supported by the EN-MAP message.
- For each unicast resource allocation, the DL/UL resource allocations are combined together into the same IE whenever possible to reduce MAC overhead, i.e. when the same basic CID for both DL and UL is used for the DL/UL resource allocation.

It is another object of the invention that in the Root MAP, to point to broadcast message regions specifically for 1) all 802.16e MSS or 2) all 802.16e Sleep mode MSS or 3) all 802.16e Idle mode MSS, an MSS_region_IE is provided. This IE includes an Applicability Code field to indicate which type of region is assigned by the IE. The MSS_region_IE may also be used to point to the region for the EN-MAP message.

It is another object of the invention that in the Root MAP, to allow 802.16e MSS to avoid processing regions designated for 802.16d SS, a Skip_IE is provided. The Skip_IE may be used to toggle the enabling and disabling of processing of regions designated by IEs following the Skip_IE.

- According to aspects of the invention the 802.16e MSS sequentially processes IEs and if applicable the associated regions designated by the IEs in the Root MAP. When the first Skip_IE is encountered, the MSS may not process the region designated by IEs following the Skip_IE. When a second Skip_IE is encountered, the MSS reverts back to processing the region designated by the IEs following the Skip_IE when applicable. When the next Skip_IE is encountered, the MSS again disables processing of regions designated by subsequent IEs. This procedure may continue until the end of the Root MAP.

It is an object of the invention that both backward compatibility with 802.16d SS and power saving and overhead reduction for 802.16e MSS can be achieved:

- According to aspects of the invention for a 802.16d SS, the operation is as usual since the 802.16d SSs ignore any newly introduced IEs
- According to aspects of the invention for a 802.16e MSS, unicast information designated for 802.16d SS may be skipped for power saving purposes by 802.16e MSSs. Also, 802.16e MSSs in certain modes (normal, sleep, idle) may only process the relevant regions designated for the MSS.

Copy provided by USPTO fr m th IFW

Brief Description of the Figures

Figure 1 presents a hierarchical MAP structure in accordance with an embodiment of the invention.

Figure 2 is a block representation of a cellular communication system.

Figure 3 is a block representation of a base station according to one embodiment of the present invention.

Figure 4 is a block representation of a mobile terminal according to one embodiment of the present invention.

Figure 5 is a logical breakdown of an OFDM transmitter architecture according to one embodiment of the present invention.

Figure 6 is a logical breakdown of an OFDM receiver architecture according to one embodiment of the present invention.

Figure 7 illustrates a pattern of sub-carriers for carrying pilot symbols in an OFDM environment.

Detailed Description of Embodiments of the Invention

The following modification is based on IEEE standard p802.16e/D5 which is hereby incorporated by reference.

Figure 1 presents a hierarchical MAP structure in accordance with an embodiment of the invention. As will be apparent to one of skill in the art the regions shown are logical region rather than actual physical subchannel and OFDMA symbol space.

Table 1 presents enhanced MAP (EN-MAP) message formats in accordance with an embodiment of the invention. The EN-MAP message may define the access to the to the downlink information for OFDMA PHY systems. This message may be transmitted without MAC header. This message may be transmitted at any location.

Table 1 Enhanced MAP message format

Syntax	Size	Notes
Enhanced-MAP_Message_Format () {		
Length	11 bits	The length in bytes of this message.
Num_IEs	7 bits	
For (i = 0;i++;I < Num_IEs)		
{		
EN-MAP_IE()	variable	See EN-MAP IE Below (Table 4)

}		
Padding bits	Variable	Ensure to align to the boundary of byte
}		

Table 2 presents a Skip IE format in accordance with an embodiment of the invention.

This IE may be sent by BS in a DL-MAP/Compressed DL-MAP message as a broadcast IE, and may be used as a switcher to instruct the 802.16e MSSed to skip the process in regions indicated by some broadcast types of IEs. The Skip IE may appear in pair. The first Skip IE indicates the start of skipping and the next one indicate the end of skipping.

Table 2 Skip_IE Format

Syntax	Size	Notes
Skip_IE() {		
Extended DIUC	4 bits	S=0x0A
Length	4 bits	
}		

Table 3 present a MSS Region IE format in accordance with an embodiment of the invention. This IE may be sent by BS in a DL-MAP/Compressed DL-MAP message as a broadcast type of IE. The rejoin indicated by this IE may be processed by 802.16e MSSes in normal, sleep and idle modes.

Table 3 Region_IE Format

Syntax	Size	Notes
MSS_region_IE() {		
Extended DIUC	4 bits	S=0x0B
Length	4 bits	
DIUC	4 bits	
Applicability code	2 bits	0b00: access system configuration types of messages (e.g., MOB_NBR_ADV) by all 802.16e MSSes 0b01: access Enhanced MAP message by 802.16e MSSes in normal and sleep mode

		0b10: access the sleep mode specific messages (e.g., MOB_TRF_IND) by 802.16e MSSes in sleep mode 0b11: Access idle mode specific messages (e.g., MOB_PAG_ADV) by 802.16e MSSes in idle mode
OFDMA symbol offset	8 bits	
Subchannel offset	6 bits	
Boosting	3 bits	
No. OFDMA symbols	8 bits	
No. Subchannels	8 bits	
Repetition Coding Indication	2 bits	
Padding bits	variable	To align byte boundary
}		

Table 4 present an EN-MAP IE format in accordance with an embodiment of the invention.

An EN-MAP IE may define an access to the OFDMA downlink and uplink by MSSs or a control IE to request MSSes to take certain actions. A sample IE format is shown in Table 4.

Table 4 EN-MAP_IE Format

Syntax	Size	Notes
EN-MAP_IE() {		
IE_Type	6 bits	
Length	6 bits	
IE specific field	Variable	
}		

In accordance with an embodiment of the invention EN-MAP IE type encoding is presented in Table 5.

Table 5 EN-MAP IE type encoding

Type	EN-MAP type encoding	En-MAP IE name	format
0	0b 000000	DL access IE	See 8.4.5.8.2
1	0b 000001	UL access IE	See 8.4.5.8.3
2	0b 000010	DL/UL access IE	See 8.4.5.8.4
3	0b 000011	DL AAS IE	See 8.4.5.3.3 (removing the 'Extended DIUC' and 'Length'

			fields)
4		DL TD_Zone IE	See 8.4.5.3.4 (removing the 'Extended DIUC' and 'Length' fields)
5		Channel measurement IE	See 8.4.5.3.5 (removing the 'Extended DIUC' and 'Length' fields)
6		Data_location_in_another_BS IE	See 8.4.5.3.6 (removing the 'Extended DIUC' and 'Length' and 'reserved' fields and insert'CID(16 bits)' field)
7		MIMO_DL_Basic IE	See 8.4.5.3.8 (removing the 'Extended DIUC' and 'Length' fields)
8		MIMO_DL_Enhanced IE	See 8.4.5.3.9 (removing the 'Extended DIUC' and 'Length' fields)
9		DL PUSC burst allocation in other segment IE	See 8.4.5.3.12 (removing the 'Extended DIUC' and 'Length' fields)
10		HO active anchor DL MAP IE	See 8.4.5.3.13 (removing the 'Extended DIUC' and 'Length' fields)
11		HO Active Anchor DL MAPIE	See 8.4.5.3.14 (removing the 'Extended DIUC' and 'Length' fields)
12		HO CID Translation IE	See 8.4.5.3.15 (removing the 'Extended DIUC' and 'Length' fields)
13		MIMO_in_another_BS IE	See 8.4.5.3.16 (removing the 'Extended DIUC' and 'Length' fields)
14		Macro_DL_Basic IE	See 8.4.5.3.17 (removing the 'Extended DIUC' and 'Length' fields)
15		Power control IE	See 8.4.5.4.5 (removing the 'Extended DIUC' and 'Length' and 'reserved' fields and insert'CID(16 bits)' field)
16		UL AAS IE	See 8.4.5.3.6 (removing the 'Extended DIUC' and 'Length' fields)
17		PAPR reduction, safty zone and sounding zone allocation IE	See 8.4.5.3.7 (removing the 'Extended DIUC' and 'Length' fields)

18		MIMO UL Basic IE	See 8.4.5.3.11 (removing the 'Extended DIUC' and 'Length' fields)
19		CQICH alloc IE	See 8.4.5.3.2 (removing the 'Extended DIUC' and 'Length' fields and inserting 'CID(16 bits)' field)
20		UL physical Modifier IE	See 8.4.5.3.14 (removing the 'Extended DIUC' and 'Length' fields)
21		CQICH Enhance Allocation IE	See 8.4.5.3.15 (removing the 'Extended DIUC' and 'Length' fields)
22		UL PUSC Burst Allocation in other segment	See 8.4.5.3.16 (removing the 'Extended DIUC' and 'Length' fields)
23		HO active anchor UL MAP IE	See 8.4.5.3.18 (removing the 'Extended DIUC' and 'Length' fields)
24		HO Active Anchor UL MAPIE	See 8.4.5.3.19 (removing the 'Extended DIUC' and 'Length' fields)
25		Fast ranging IE	See 8.4.5.3.20 (removing the 'Extended DIUC' and 'Length' fields)
26		DL HARQ access IE	
27		DL MIMO-HARQ access IE	
28		UL HARQ access IE	
29		UL MIMO-HARQ access IE	
30		DL/UL HARQ access IE	
31		DL/UL MIMO-HARQ IE	

In accordance with an embodiment of the invention the DL access IE defines a DL two-dimensional region for one or more MSS(s) to access. Table 5 presents an DL access_IE Format in accordance with an embodiment of the invention.

Table 5 DL access_IE Format

Syntax	Size	Notes
DL_access_IE() {		
Num_CIDs	4 bits	
For (I = 0; i<Num_CIDs; i++)		

{		
CID	16 bits	Any type of CID
}		
DIUC	4 bits	
OFDMA symbol offset	8 bits	
Subchannel offset	6 bits	
Boosting	3 bits	
No. OFDMA symbols	8 bits	
No. Subchannels	8 bits	
Repetition Coding Indication	2 bits	
Padding bits	variable	To align byte boundary
}		

According to an embodiment of the invention the UL access IE defines a UL duration for one MSS to access. Table 6 presents an UL access_IE Format in accordance with an embodiment of the invention.

Table 6 UL access_IE Format

Syntax	Size	Notes
UL_access_IE() {		
CID	16 bits	
UIUC	4 bits	
Duration	10 bits	In OFDMA slot (see 8.4.3.1)
Repetition code indication	2 bits	0b00: no repetition coding 0b01: Repetition coding of 2 used 0b10: Repetition coding of 4 used 0b11: Repetition coding of 6 used
}		

In accordance with an embodiment of the invention the UL access IE may define a DL two-dimensional region and a UL duration for one MSS to access at the same. Table 7 presents a DL/UL access_IE format in accordance with an embodiment of the invention.

Table 7 DL/UL access_IE Format

Syntax	Size	Notes
DL/UL_access_IE() {		
CID	16 bits	Basic CID if the UL resource allocation can be used by any UL connections; UL connection ID if the UL resource

Copy provided by USPTO from the IFW Image Database

		allocated for a specific UL connection (DL connection CID always appears in MAC header)
DIUC		
OFDMA symbol offset	8 bits	
Subchannel offset	6 bits	
Boosting	3 bits	
No. OFDMA symbols	8 bits	
No. Subchannels	8 bits	
Repetition Coding Indication	2 bits	
UIUC	4 bits	
Duration	10 bits	In OFDMA slot (see 8.4.3.1)
Repetition code indication	2 bits	0b00: no repetition coding 0b01: Repetition coding of 2 used 0b10: Repetition coding of 4 used 0b11: Repetition coding of 6 used
}		

With reference to Figure 2, a base station controller (BSC) 10 controls wireless communications within multiple cells 12, which are served by corresponding base stations (BS) 14. In general, each base station 14 facilitates communications using OFDM with mobile terminals 16, which are within the cell 12 associated with the corresponding base station 14. The movement of the mobile terminals 16 in relation to the base stations 14 results in significant fluctuation in channel conditions. As illustrated, the base stations 14 and mobile terminals 16 may include multiple antennas to provide spatial diversity for communications.

A high level overview of the mobile terminals 16 and base stations 14 of the present invention is provided prior to delving into the structural and functional details of the preferred embodiments. With reference to Figure 3, a base station 14 configured according to one embodiment of the present invention is illustrated. The base station 14 generally includes a control system 20, a baseband processor 22, transmit circuitry 24, receive circuitry 26, multiple antennas 28, and a network interface 30. The receive circuitry 26 receives radio frequency signals bearing information from one or more remote transmitters provided by mobile terminals 16 (illustrated in Figure 4). Preferably, a low noise amplifier and a filter (not shown) cooperate to amplify and remove broadband interference from the signal for processing. Downconversion and digitization circuitry (not

Copy provided by USPTO from the IFW Image Database on 05/12/2005

shown) will then downconvert the filtered, received signal to an intermediate or baseband frequency signal, which is then digitized into one or more digital streams.

The baseband processor 22 processes the digitized received signal to extract the information or data bits conveyed in the received signal. This processing typically comprises demodulation, decoding, and error correction operations. As such, the baseband processor 22 is generally implemented in one or more digital signal processors (DSPs) or application-specific integrated circuits (ASICs). The received information is then sent across a wireless network via the network interface 30 or transmitted to another mobile terminal 16 serviced by the base station 14.

On the transmit side, the baseband processor 22 receives digitized data, which may represent voice, data, or control information, from the network interface 30 under the control of control system 20, and encodes the data for transmission. The encoded data is output to the transmit circuitry 24, where it is modulated by a carrier signal having a desired transmit frequency or frequencies. A power amplifier (not shown) will amplify the modulated carrier signal to a level appropriate for transmission, and deliver the modulated carrier signal to the antennas 28 through a matching network (not shown). Modulation and processing details are described in greater detail below.

With reference to Figure 4, a mobile terminal 16 configured according to one embodiment of the present invention is illustrated. Similarly to the base station 14, the mobile terminal 16 will include a control system 32, a baseband processor 34, transmit circuitry 36, receive circuitry 38, multiple antennas 40, and user interface circuitry 42. The receive circuitry 38 receives radio frequency signals bearing information from one or more base stations 14. Preferably, a low noise amplifier and a filter (not shown) cooperate to amplify and remove broadband interference from the signal for processing. Downconversion and digitization circuitry (not shown) will then downconvert the filtered, received signal to an intermediate or baseband frequency signal, which is then digitized into one or more digital streams.

The baseband processor 34 processes the digitized received signal to extract the information or data bits conveyed in the received signal. This processing typically comprises demodulation, decoding, and error correction operations, as will be discussed on greater detail below. The baseband processor 34 is generally

Copy provided by USPTO from the IFW Image Database on 05/12/2005

implemented in one or more digital signal processors (DSPs) and application specific integrated circuits (ASICs).

For transmission, the baseband processor 34 receives digitized data, which may represent voice, data, or control information, from the control system 32, which it encodes for transmission. The encoded data is output to the transmit circuitry 36, where it is used by a modulator to modulate a carrier signal that is at a desired transmit frequency or frequencies. A power amplifier (not shown) will amplify the modulated carrier signal to a level appropriate for transmission, and deliver the modulated carrier signal to the antennas 40 through a matching network (not shown). Various modulation and processing techniques available to those skilled in the art are applicable to the present invention.

In OFDM modulation, the transmission band is divided into multiple, orthogonal carrier waves. Each carrier wave is modulated according to the digital data to be transmitted. Because OFDM divides the transmission band into multiple carriers, the bandwidth per carrier decreases and the modulation time per carrier increases. Since the multiple carriers are transmitted in parallel, the transmission rate for the digital data, or symbols, on any given carrier is lower than when a single carrier is used.

OFDM modulation requires the performance of an Inverse Fast Fourier Transform (IFFT) on the information to be transmitted. For demodulation, the performance of a Fast Fourier Transform (FFT) on the received signal is required to recover the transmitted information. In practice, the IFFT and FFT are provided by digital signal processing carrying out an Inverse Discrete Fourier Transform (IDFT) and Discrete Fourier Transform (DFT), respectively. Accordingly, the characterizing feature of OFDM modulation is that orthogonal carrier waves are generated for multiple bands within a transmission channel. The modulated signals are digital signals having a relatively low transmission rate and capable of staying within their respective bands. The individual carrier waves are not modulated directly by the digital signals. Instead, all carrier waves are modulated at once by IFFT processing.

In the preferred embodiment, OFDM is used for at least the downlink transmission from the base stations 14 to the mobile terminals 16. Each base station 14 is equipped with n transmit antennas 28, and each mobile terminal 16 is equipped with m receive antennas 40. Notably, the respective antennas can be used for reception and transmission using appropriate duplexers or switches and are so labeled only for clarity.

Copy provided by USPTO from the IFW Image Database on 05/12/2005

With reference to Figure 5, a logical OFDM transmission architecture is provided according to one embodiment. Initially, the base station controller 10 will send data to be transmitted to various mobile terminals 16 to the base station 14. The base station 14 may use the CQIs associated with the mobile terminals to schedule the data for transmission as well as select appropriate coding and modulation for transmitting the scheduled data. The CQIs may be directly from the mobile terminals 16 or determined at the base station 14 based on information provided by the mobile terminals 16. In either case, the CQI for each mobile terminal 16 is a function of the degree to which the channel amplitude (or response) varies across the OFDM frequency band.

The scheduled data 44, which is a stream of bits, is scrambled in a manner reducing the peak-to-average power ratio associated with the data using data scrambling logic 46. A cyclic redundancy check (CRC) for the scrambled data is determined and appended to the scrambled data using CRC adding logic 48. Next, channel coding is performed using channel encoder logic 50 to effectively add redundancy to the data to facilitate recovery and error correction at the mobile terminal 16. Again, the channel coding for a particular mobile terminal 16 is based on the CQI. The channel encoder logic 50 uses known Turbo encoding techniques in one embodiment. The encoded data is then processed by rate matching logic 52 to compensate for the data expansion associated with encoding.

Bit interleaver logic 54 systematically reorders the bits in the encoded data to minimize the loss of consecutive data bits. The resultant data bits are systematically mapped into corresponding symbols depending on the chosen baseband modulation by mapping logic 56. Preferably, Quadrature Amplitude Modulation (QAM) or Quadrature Phase Shift Key (QPSK) modulation is used. The degree of modulation is preferably chosen based on the CQI for the particular mobile terminal. The symbols may be systematically reordered to further bolster the immunity of the transmitted signal to periodic data loss caused by frequency selective fading using symbol interleaver logic 58.

At this point, groups of bits have been mapped into symbols representing locations in an amplitude and phase constellation. When spatial diversity is desired, blocks of symbols are then processed by space-time block code (STC) encoder logic 60, which modifies the symbols in a fashion making the transmitted signals more resistant to interference and more readily decoded at a mobile terminal 16. The STC encoder logic 60 will

Copy provided by USPTO from the IFW Image Database on 05/12/2005

process the incoming symbols and provide n outputs corresponding to the number of transmit antennas 28 for the base station 14. The control system 20 and/or baseband processor 22 will provide a mapping control signal to control STC encoding. At this point, assume the symbols for the n outputs are representative of the data to be transmitted and capable of being recovered by the mobile terminal 16. See A.F. Naguib, N. Seshadri, and A.R. Calderbank, "Applications of space-time codes and interference suppression for high capacity and high data rate wireless systems," Thirty-Second Asilomar Conference on Signals, Systems & Computers, Volume 2, pp. 1803-1810, 1998, which is incorporated herein by reference in its entirety.

For the present example, assume the base station 14 has two antennas 28 (n=2) and the STC encoder logic 60 provides two output streams of symbols. Accordingly, each of the symbol streams output by the STC encoder logic 60 is sent to a corresponding IFFT processor 62, illustrated separately for ease of understanding. Those skilled in the art will recognize that one or more processors may be used to provide such digital signal processing, alone or in combination with other processing described herein. The IFFT processors 62 will preferably operate on the respective symbols to provide an inverse Fourier Transform. The output of the IFFT processors 62 provides symbols in the time domain. The time domain symbols are grouped into frames, which are associated with a prefix by like insertion logic 64. Each of the resultant signals is up-converted in the digital domain to an intermediate frequency and converted to an analog signal via the corresponding digital up-conversion (DUC) and digital-to-analog (D/A) conversion circuitry 66. The resultant (analog) signals are then simultaneously modulated at the desired RF frequency, amplified, and transmitted via the RF circuitry 68 and antennas 28. Notably, pilot signals known by the intended mobile terminal 16 are scattered among the sub-carriers. The mobile terminal 16, which is discussed in detail below, will use the pilot signals for channel estimation.

Reference is now made to Figure 6 to illustrate reception of the transmitted signals by a mobile terminal 16. Upon arrival of the transmitted signals at each of the antennas 40 of the mobile terminal 16, the respective signals are demodulated and amplified by corresponding RF circuitry 70. For the sake of conciseness and clarity, only one of the two receive paths is described and illustrated in detail. Analog-to-digital (A/D) converter and down-conversion circuitry 72 digitizes and downconverts the analog signal for digital processing. The resultant digitized signal may be used by automatic gain control circuitry (AGC) 74 to control the gain of the amplifiers in the RF circuitry 70 based on the received signal level.

Copy provided by USPTO from the IFW Image Database on 05/12/2005

Initially, the digitized signal is provided to synchronization logic 76, which includes coarse synchronization logic 78, which buffers several OFDM symbols and calculates an auto-correlation between the two successive OFDM symbols. A resultant time index corresponding to the maximum of the correlation result determines a fine synchronization search window, which is used by fine synchronization logic 80 to determine a precise framing starting position based on the headers. The output of the fine synchronization logic 80 facilitates frame acquisition by frame alignment logic 84. Proper framing alignment is important so that subsequent FFT processing provides an accurate conversion from the time to the frequency domain. The fine synchronization algorithm is based on the correlation between the received pilot signals carried by the headers and a local copy of the known pilot data. Once frame alignment acquisition occurs, the prefix of the OFDM symbol is removed with prefix removal logic 86 and resultant samples are sent to frequency offset correction logic 88, which compensates for the system frequency offset caused by the unmatched local oscillators in the transmitter and the receiver. Preferably, the synchronization logic 76 includes frequency offset and clock estimation logic 82, which is based on the headers to help estimate such effects on the transmitted signal and provide those estimations to the correction logic 88 to properly process OFDM symbols.

At this point, the OFDM symbols in the time domain are ready for conversion to the frequency domain using FFT processing logic 90. The results are frequency domain symbols, which are sent to processing logic 92. The processing logic 92 extracts the scattered pilot signal using scattered pilot extraction logic 94, determines a channel estimate based on the extracted pilot signal using channel estimation logic 96, and provides channel responses for all sub-carriers using channel reconstruction logic 98. In order to determine a channel response for each of the sub-carriers, the pilot signal is essentially multiple pilot symbols that are scattered among the data symbols throughout the OFDM sub-carriers in a known pattern in both time and frequency. Figure 7 illustrates an exemplary scattering of pilot symbols among available sub-carriers over a given time and frequency plot in an OFDM environment. Continuing with Figure 6, the processing logic compares the received pilot symbols with the pilot symbols that are expected in certain sub-carriers at certain times to determine a channel response for the sub-carriers in which pilot symbols were transmitted. The results are interpolated to estimate a channel response for most, if not all, of the remaining sub-carriers for which pilot symbols were not provided. The actual and interpolated channel responses are used to estimate an overall channel response, which includes the channel responses for most, if not all, of the sub-carriers in the OFDM channel.

Copy provided by USPTO from the IFW Image Database on 05/12/2005

The frequency domain symbols and channel reconstruction information, which are derived from the channel responses for each receive path are provided to an STC decoder 100, which provides STC decoding on both received paths to recover the transmitted symbols. The channel reconstruction information provides equalization information to the STC decoder 100 sufficient to remove the effects of the transmission channel when processing the respective frequency domain symbols

The recovered symbols are placed back in order using symbol de-interleaver logic 102, which corresponds to the symbol interleaver logic 58 of the transmitter. The de-interleaved symbols are then demodulated or de-mapped to a corresponding bitstream using de-mapping logic 104. The bits are then de-interleaved using bit de-interleaver logic 106, which corresponds to the bit interleaver logic 54 of the transmitter architecture. The de-interleaved bits are then processed by rate de-matching logic 108 and presented to channel decoder logic 110 to recover the initially scrambled data and the CRC checksum. Accordingly, CRC logic 112 removes the CRC checksum, checks the scrambled data in traditional fashion, and provides it to the de-scrambling logic 114 for de-scrambling using the known base station de-scrambling code to recover the originally transmitted data 116.

In parallel to recovering the data 116, a CQI, or at least information sufficient to create a CQI at the base station 14, is determined and transmitted to the base station 14. As noted above, the CQI in a preferred embodiment is a function of the carrier-to-interference ratio (CIR), as well as the degree to which the channel response varies across the various sub-carriers in the OFDM frequency band. For this embodiment, the channel gain for each sub-carrier in the OFDM frequency band being used to transmit information are compared relative to one another to determine the degree to which the channel gain varies across the OFDM frequency band. Although numerous techniques are available to measure the degree of variation, one technique is to calculate the standard deviation of the channel gain for each sub-carrier throughout the OFDM frequency band being used to transmit data.

Copy provided by USPTO from the IFW Image Database on 05/12/2005

WE CLAIM:

1. A method comprising:
   - Provisioning a first MAP for allocating resources to a terminal
   - Wherein said first MAP includes one or more pointers pointing to a second MAP

Copy provided by USPTO from the IFW Image Database on 05/12/2005

. Figure 1

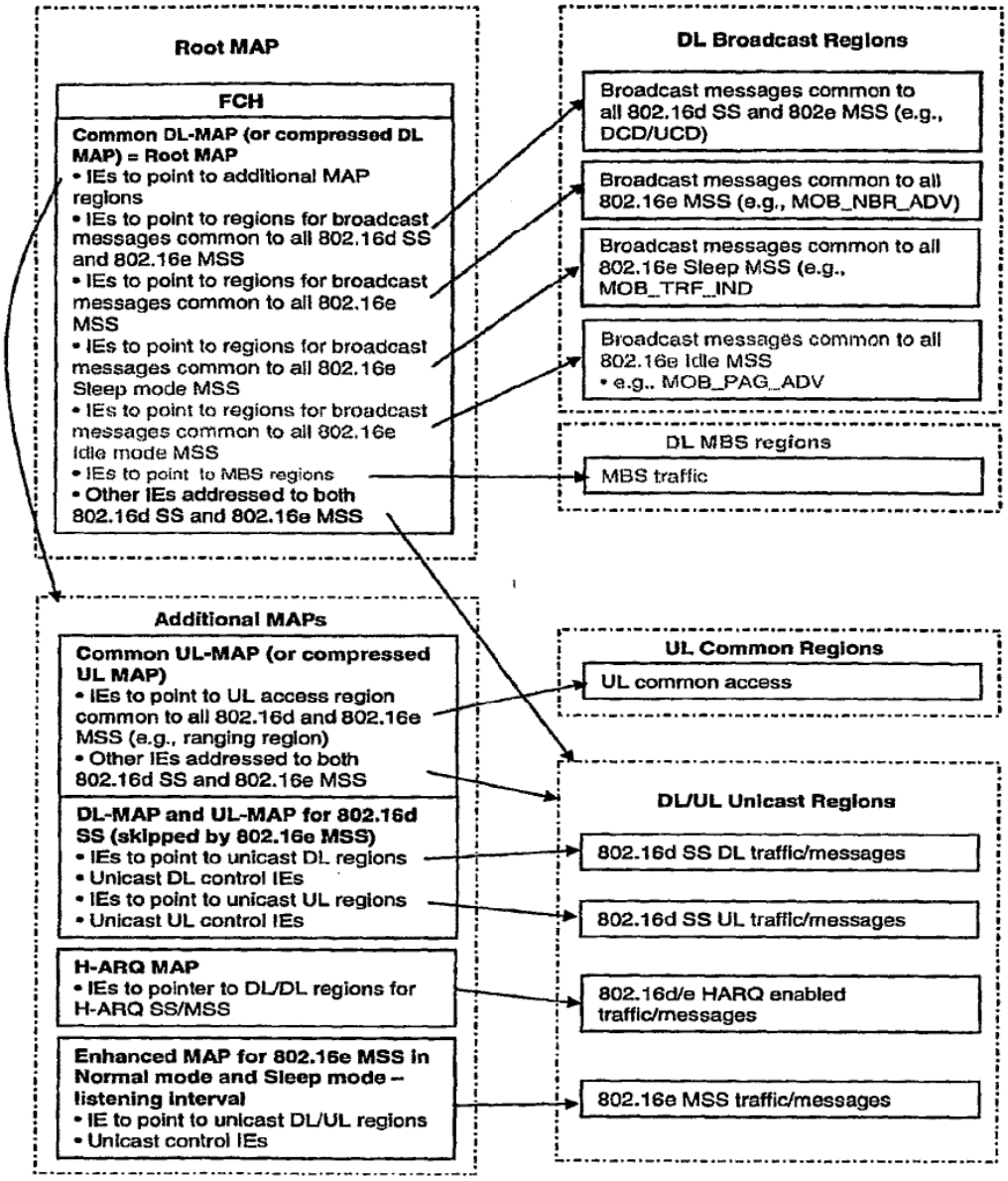

Copy provided by USPTO from the IFW Image Database on 05/12/2005

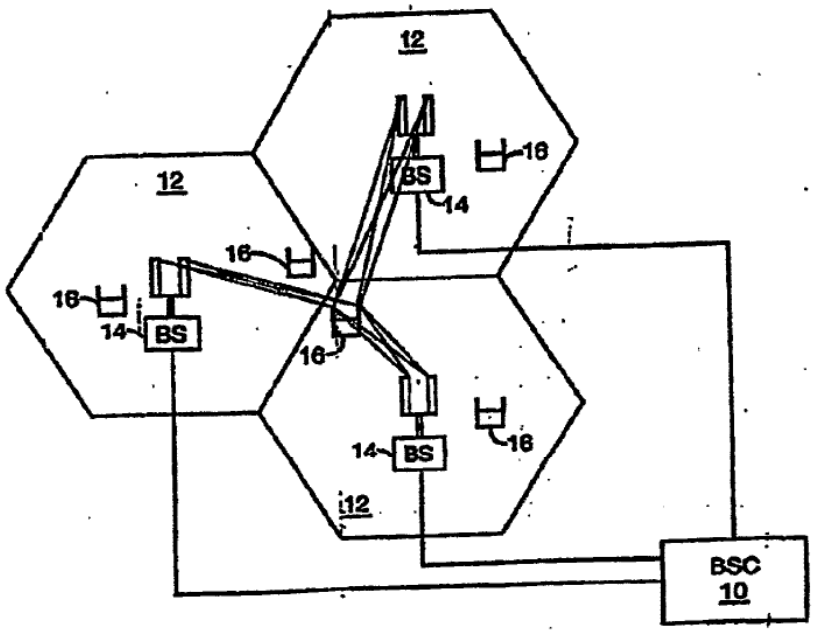

Figure 2

Copy provided by USPTO from the IFW Image Database on 05/12/2005

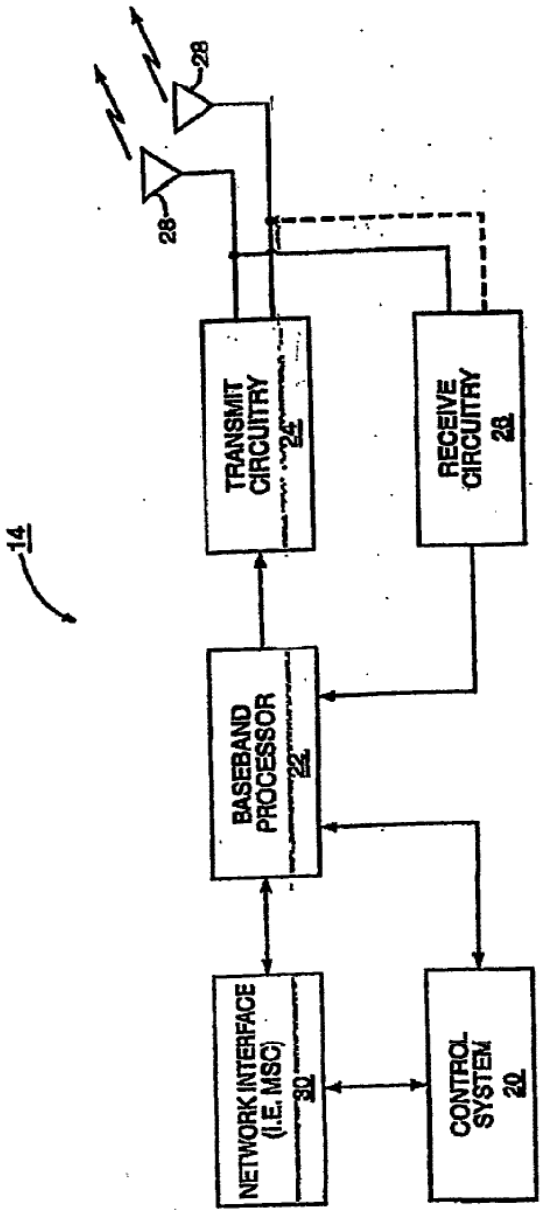

Figure 3

Copy provided by USPTO from the IFW Image Database on 05/12/2005

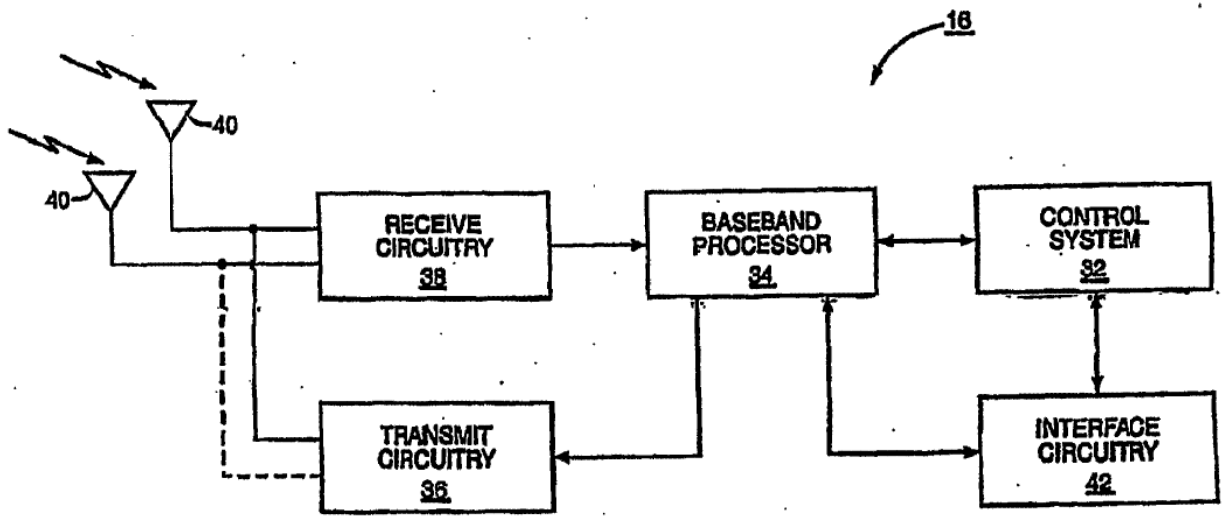

Figure 4

Copy provided by USPTO from the IFW Image Database on 05/12/2005

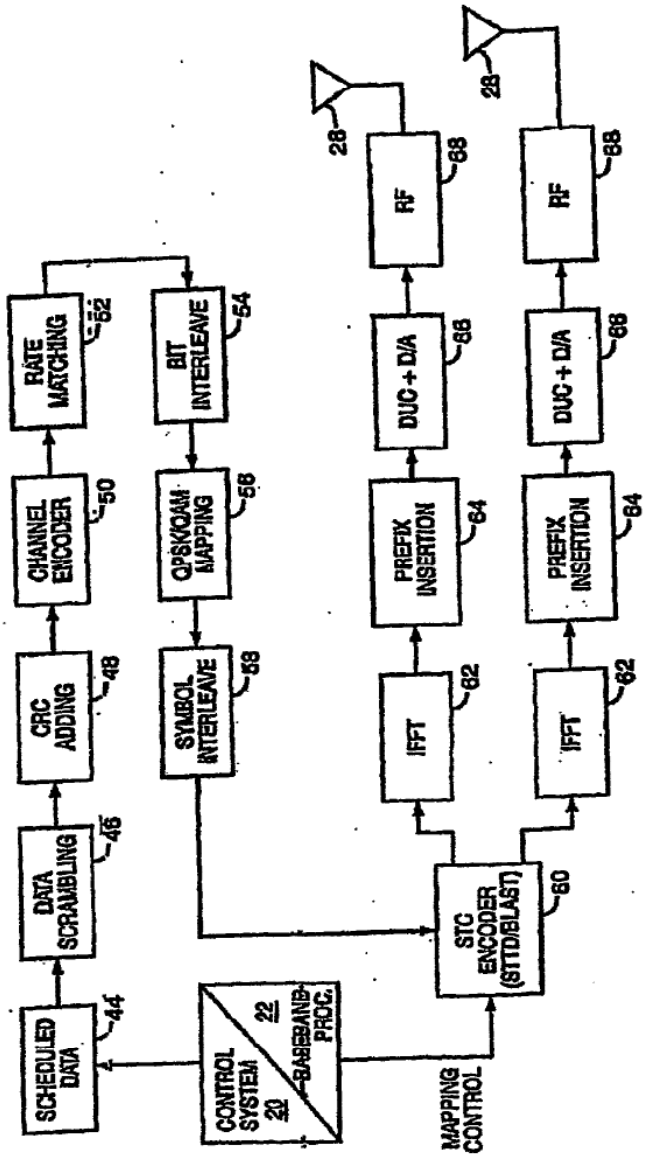

Figure 5

Copy provided by USPTO from the IFW Image Database on 05/12/2005

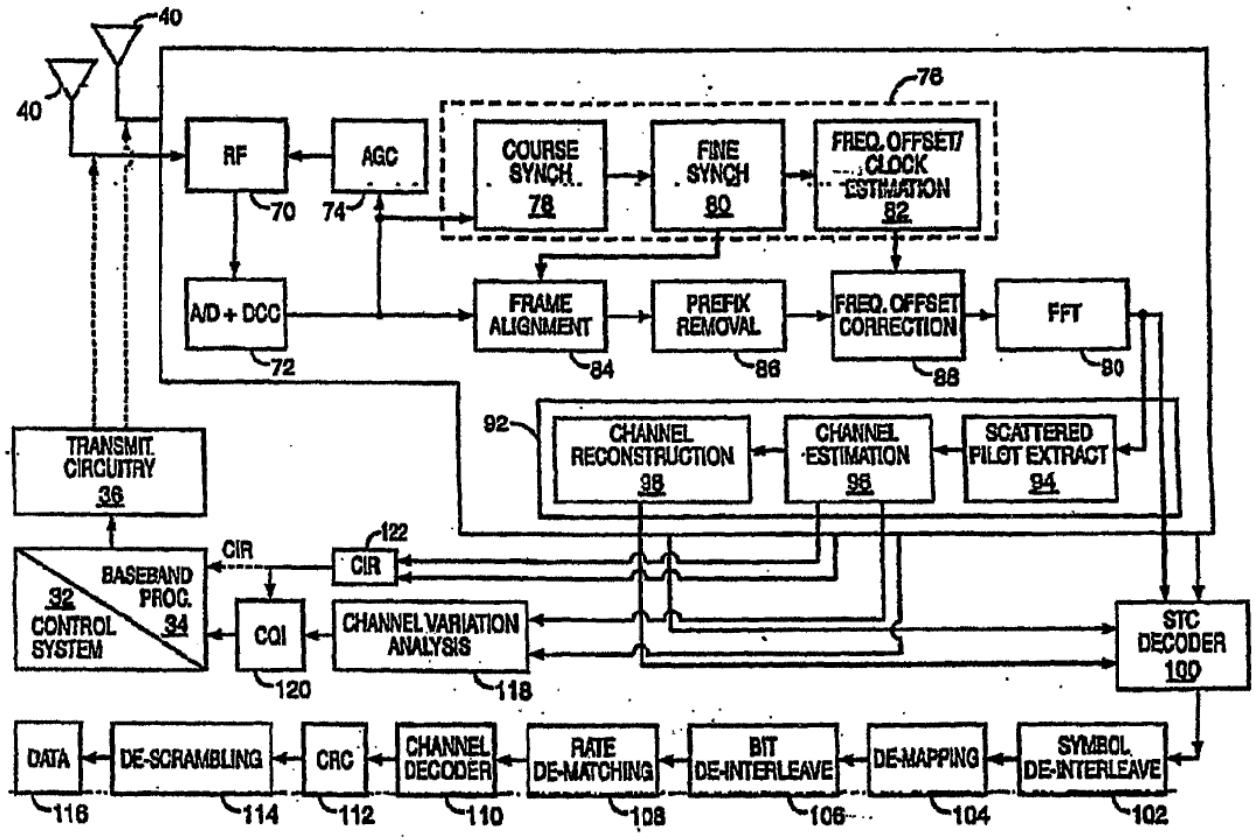

Figure 6

Copy provided by USPTO from the IFW Image Database on 05/12/2005

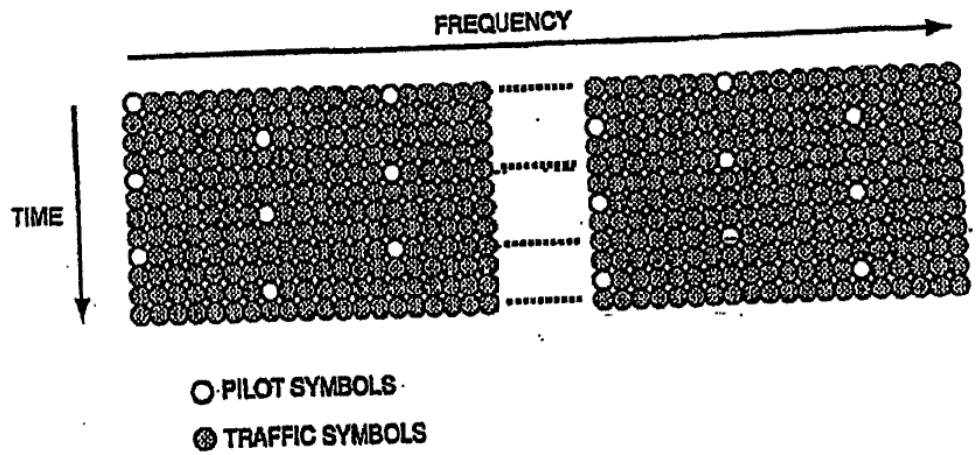

Figure 7

Copy provided by USPTO from the IFW Image Database on 05/12/2005

PILOT PATTERN SYSTEM AND METHOD

Field of the Invention

This invention generally relates to the field of wireless communications. More specifically to pilot pattern systems and methods for closed loop MIMO in broadband mobile wireless metropolitan area networks including networks operating according to the IEEE 802.16(e) standard.

Background of the Invention

There are numerous problems associated with the current 802.16(e) standard.

- The overhead of the pilots increase with the number of transmit antennas.
- In the current standard, puncturing is applied to reduced the pilot overhead when four transmit antennas are used.
  - Puncture causes degradation
- Close loop MIMO requires channel information for multiple channels corresponding to each transmit antenna
- More pilots are needed for the channel sounding if BS has more than four antennas
  - Therefore, one can not depend on puncturing anymore

A need exists therefore for an improved pilot pattern system and method.

Summary of the Invention

It is an object of the invention to provide a pilot pattern system and method wherein pilot density along the time direction can be reduced considering that close loop MIMO is generally applicable for low speed MSSs (Mobile Subscriber Station).

It is a further object of the invention that the same pilot overhead support more antenna's channel estimation.

It is a further object of the invention that for 4-transmit antennas case, no puncturing is required.

It is a further object of the invention to provide more channel information which in turn provides the possibility to employ MIMO BLAST with more antennas to increase the throughput if terminal has enough receive antennas

It is another object of the invention that for the downlink, SS can use pilots located in the sub-channels assigned to other SSs for channel estimation (no pilot pre-distortion).

Copy provided by USPTO from the IFW Image Database on 05/12/2005

Brief Description of the Figures

Figure 1 provides a pilot allocation for 4-antenna BS for the optional FUSC and Optional AMC zones in 802.16d in accordance with an embodiment of the invention

Figure 2 provides a pilot allocation for four transmit antennas (no puncturing required) in accordance with an embodiment of the invention

Figure 3 provides a pilot allocation for eight transmit antennas in accordance with an embodiments of the invention

Figure 4 provides a pilot allocation for twelve transmit antennas in accordance with an embodiments of the invention

Figure 5 is a block representation of a cellular communication system.

Figure 6 is a block representation of a base station according to one embodiment of the present invention.

Figure 7 is a block representation of a mobile terminal according to one embodiment of the present invention.

Figure 8 is a logical breakdown of an OFDM transmitter architecture according to one embodiment of the present invention.

Figure 9 is a logical breakdown of an OFDM receiver architecture according to one embodiment of the present invention.

Figure 10 illustrates a pattern of sub-carriers for carrying pilot symbols in an OFDM environment.

Detailed Description of Embodiments of the Invention

The following modification is based on IEEE standard p802.16e/D5 which is hereby incorporated by reference.

With reference to Figure 5, a base station controller (BSC) 10 controls wireless communications within multiple cells 12, which are served by corresponding base stations (BS) 14. In general, each base station 14 facilitates communications using OFDM with mobile terminals 16, which are within the cell 12 associated with the corresponding base station 14. The movement of the mobile terminals 16 in relation to

Copy provided by USPTO from the IFW Image Database on 05/12/2005

the base stations 14 results in significant fluctuation in channel conditions. As illustrated, the base stations 14 and mobile terminals 16 may include multiple antennas to provide spatial diversity for communications.

A high level overview of the mobile terminals 16 and base stations 14 of the present invention is provided prior to delving into the structural and functional details of the preferred embodiments. With reference to Figure 6, a base station 14 configured according to one embodiment of the present invention is illustrated. The base station 14 generally includes a control system 20, a baseband processor 22, transmit circuitry 24, receive circuitry 26, multiple antennas 28, and a network interface 30. The receive circuitry 26 receives radio frequency signals bearing information from one or more remote transmitters provided by mobile terminals 16 (illustrated in Figure 7). Preferably, a low noise amplifier and a filter (not shown) cooperate to amplify and remove broadband interference from the signal for processing. Downconversion and digitization circuitry (not shown) will then downconvert the filtered, received signal to an intermediate or baseband frequency signal, which is then digitized into one or more digital streams.

The baseband processor 22 processes the digitized received signal to extract the information or data bits conveyed in the received signal. This processing typically comprises demodulation, decoding, and error correction operations. As such, the baseband processor 22 is generally implemented in one or more digital signal processors (DSPs) or application-specific integrated circuits (ASICs). The received information is then sent across a wireless network via the network interface 30 or transmitted to another mobile terminal 16 serviced by the base station 14.

On the transmit side, the baseband processor 22 receives digitized data, which may represent voice, data, or control information, from the network interface 30 under the control of control system 20, and encodes the data for transmission. The encoded data is output to the transmit circuitry 24, where it is modulated by a carrier signal having a desired transmit frequency or frequencies. A power amplifier (not shown) will amplify

Copy provided by USPTO from the IFW Image Database on 05/12/2005

the modulated carrier signal to a level appropriate for transmission, and deliver the modulated carrier signal to the antennas 28 through a matching network (not shown). Modulation and processing details are described in greater detail below.

With reference to Figure 7, a mobile terminal 16 configured according to one embodiment of the present invention is illustrated. Similarly to the base station 14, the mobile terminal 16 will include a control system 32, a baseband processor 34, transmit circuitry 36, receive circuitry 38, multiple antennas 40, and user interface circuitry 42. The receive circuitry 38 receives radio frequency signals bearing information from one or more base stations 14. Preferably, a low noise amplifier and a filter (not shown) cooperate to amplify and remove broadband interference from the signal for processing. Downconversion and digitization circuitry (not shown) will then downconvert the filtered, received signal to an intermediate or baseband frequency signal, which is then digitized into one or more digital streams.

The baseband processor 34 processes the digitized received signal to extract the information or data bits conveyed in the received signal. This processing typically comprises demodulation, decoding, and error correction operations, as will be discussed on greater detail below. The baseband processor 34 is generally implemented in one or more digital signal processors (DSPs) and application specific integrated circuits (ASICs).

For transmission, the baseband processor 34 receives digitized data, which may represent voice, data, or control information, from the control system 32, which it encodes for transmission. The encoded data is output to the transmit circuitry 36, where it is used by a modulator to modulate a carrier signal that is at a desired transmit frequency or frequencies. A power amplifier (not shown) will amplify the modulated carrier signal to a level appropriate for transmission, and deliver the modulated carrier signal to the antennas 40 through a matching network (not shown). Various modulation and processing techniques available to those skilled in the art are applicable to the present invention.

Copy provided by USPTO from the IFW Image Database on 05/12/2005

In OFDM modulation, the transmission band is divided into multiple, orthogonal carrier waves. Each carrier wave is modulated according to the digital data to be transmitted. Because OFDM divides the transmission band into multiple carriers, the bandwidth per carrier decreases and the modulation time per carrier increases. Since the multiple carriers are transmitted in parallel, the transmission rate for the digital data, or symbols, on any given carrier is lower than when a single carrier is used.

OFDM modulation requires the performance of an Inverse Fast Fourier Transform (IFFT) on the information to be transmitted. For demodulation, the performance of a Fast Fourier Transform (FFT) on the received signal is required to recover the transmitted information. In practice, the IFFT and FFT are provided by digital signal processing carrying out an Inverse Discrete Fourier Transform (IDFT) and Discrete Fourier Transform (DFT), respectively. Accordingly, the characterizing feature of OFDM modulation is that orthogonal carrier waves are generated for multiple bands within a transmission channel. The modulated signals are digital signals having a relatively low transmission rate and capable of staying within their respective bands. The individual carrier waves are not modulated directly by the digital signals. Instead, all carrier waves are modulated at once by IFFT processing.

In the preferred embodiment, OFDM is used for at least the downlink transmission from the base stations 14 to the mobile terminals 16. Each base station 14 is equipped with n transmit antennas 28, and each mobile terminal 16 is equipped with m receive antennas 40. Notably, the respective antennas can be used for reception and transmission using appropriate duplexers or switches and are so labeled only for clarity.

With reference to Figure 8, a logical OFDM transmission architecture is provided according to one embodiment. Initially, the base station controller 10 will send data to be transmitted to various mobile terminals 16 to the base station 14. The base station 14 may use the CQIs associated with the mobile terminals to schedule the data for transmission as well as select appropriate coding and modulation for transmitting the

Copy provided by USPTO from the IFW Image Database on 05/12/2005

scheduled data. The CQIs may be directly from the mobile terminals 16 or determined at the base station 14 based on information provided by the mobile terminals 16. In either case, the CQI for each mobile terminal 16 is a function of the degree to which the channel amplitude (or response) varies across the OFDM frequency band.

The scheduled data 44, which is a stream of bits, is scrambled in a manner reducing the peak-to-average power ratio associated with the data using data scrambling logic 46. A cyclic redundancy check (CRC) for the scrambled data is determined and appended to the scrambled data using CRC adding logic 48. Next, channel coding is performed using channel encoder logic 50 to effectively add redundancy to the data to facilitate recovery and error correction at the mobile terminal 16. Again, the channel coding for a particular mobile terminal 16 is based on the CQI. The channel encoder logic 50 uses known Turbo encoding techniques in one embodiment. The encoded data is then processed by rate matching logic 52 to compensate for the data expansion associated with encoding.

Bit interleaver logic 54 systematically reorders the bits in the encoded data to minimize the loss of consecutive data bits. The resultant data bits are systematically mapped into corresponding symbols depending on the chosen baseband modulation by mapping logic 56. Preferably, Quadrature Amplitude Modulation (QAM) or Quadrature Phase Shift Key (QPSK) modulation is used. The degree of modulation is preferably chosen based on the CQI for the particular mobile terminal. The symbols may be systematically reordered to further bolster the immunity of the transmitted signal to periodic data loss caused by frequency selective fading using symbol interleaver logic 58.

At this point, groups of bits have been mapped into symbols representing locations in an amplitude and phase constellation. When spatial diversity is desired, blocks of symbols are then processed by space-time block code (STC) encoder logic 60, which modifies the symbols in a fashion making the transmitted signals more resistant to interference and more readily decoded at a mobile terminal 16. The STC encoder logic 60 will process the incoming symbols and provide n outputs corresponding to the number of transmit antennas 28 for the base station 14. The control system 20 and/or baseband processor 22

Copy provided by USPTO from the IFW Image Database on 05/12/2005

will provide a mapping control signal to control STC encoding. At this point, assume the symbols for the *n* outputs are representative of the data to be transmitted and capable of being recovered by the mobile terminal 16. See A.F. Naguib, N. Seshadri, and A.R. Calderbank, "Applications of space-time codes and interference suppression for high capacity and high data rate wireless systems," Thirty-Second Asilomar Conference on Signals, Systems & Computers, Volume 2, pp. 1803-1810, 1998, which is incorporated herein by reference in its entirety.

For the present example, assume the base station 14 has two antennas 28 (n=2) and the STC encoder logic 60 provides two output streams of symbols. Accordingly, each of the symbol streams output by the STC encoder logic 60 is sent to a corresponding IFFT processor 62, illustrated separately for ease of understanding. Those skilled in the art will recognize that one or more processors may be used to provide such digital signal processing, alone or in combination with other processing described herein. The IFFT processors 62 will preferably operate on the respective symbols to provide an inverse Fourier Transform. The output of the IFFT processors 62 provides symbols in the time domain. The time domain symbols are grouped into frames, which are associated with a prefix by like insertion logic 64. Each of the resultant signals is up-converted in the digital domain to an intermediate frequency and converted to an analog signal via the corresponding digital up-conversion (DUC) and digital-to-analog (D/A) conversion circuitry 66. The resultant (analog) signals are then simultaneously modulated at the desired RF frequency, amplified, and transmitted via the RF circuitry 68 and antennas 28. Notably, pilot signals known by the intended mobile terminal 16 are scattered among the sub-carriers. The mobile terminal 16, which is discussed in detail below, will use the pilot signals for channel estimation.

Reference is now made to Figure 9 to illustrate reception of the transmitted signals by a mobile terminal 16. Upon arrival of the transmitted signals at each of the antennas 40 of the mobile terminal 16, the respective signals are demodulated and amplified by corresponding RF circuitry 70. For the sake of conciseness and clarity, only one of the two receive paths is described and illustrated in detail. Analog-to-digital (A/D) converter

Copy provided by USPTO from the IFW Image Database on 05/12/2005

and down-conversion circuitry 72 digitizes and downconverts the analog signal for digital processing. The resultant digitized signal may be used by automatic gain control circuitry (AGC) 74 to control the gain of the amplifiers in the RF circuitry 70 based on the received signal level.

Initially, the digitized signal is provided to synchronization logic 76, which includes coarse synchronization logic 78, which buffers several OFDM symbols and calculates an auto-correlation between the two successive OFDM symbols. A resultant time index corresponding to the maximum of the correlation result determines a fine synchronization search window, which is used by fine synchronization logic 80 to determine a precise framing starting position based on the headers. The output of the fine synchronization logic 80 facilitates frame acquisition by frame alignment logic 84. Proper framing alignment is important so that subsequent FFT processing provides an accurate conversion from the time to the frequency domain. The fine synchronization algorithm is based on the correlation between the received pilot signals carried by the headers and a local copy of the known pilot data. Once frame alignment acquisition occurs, the prefix of the OFDM symbol is removed with prefix removal logic 86 and resultant samples are sent to frequency offset correction logic 88, which compensates for the system frequency offset caused by the unmatched local oscillators in the transmitter and the receiver. Preferably, the synchronization logic 76 includes frequency offset and clock estimation logic 82, which is based on the headers to help estimate such effects on the transmitted signal and provide those estimations to the correction logic 88 to properly process OFDM symbols.

At this point, the OFDM symbols in the time domain are ready for conversion to the frequency domain using FFT processing logic 90. The results are frequency domain symbols, which are sent to processing logic 92. The processing logic 92 extracts the scattered pilot signal using scattered pilot extraction logic 94, determines a channel estimate based on the extracted pilot signal using channel estimation logic 96, and provides channel responses for all sub-carriers using channel reconstruction logic 98. In order to determine a channel response for each of the sub-carriers, the pilot signal is

Copy provided by USPTO from the IFW Image Database on 05/12/2005

essentially multiple pilot symbols that are scattered among the data symbols throughout the OFDM sub-carriers in a known pattern in both time and frequency. Figure 10 illustrates an exemplary scattering of pilot symbols among available sub-carriers over a given time and frequency plot in an OFDM environment. Continuing with Figure 9, the processing logic compares the received pilot symbols with the pilot symbols that are expected in certain sub-carriers at certain times to determine a channel response for the sub-carriers in which pilot symbols were transmitted. The results are interpolated to estimate a channel response for most, if not all, of the remaining sub-carriers for which pilot symbols were not provided. The actual and interpolated channel responses are used to estimate an overall channel response, which includes the channel responses for most, if not all, of the sub-carriers in the OFDM channel.

The frequency domain symbols and channel reconstruction information, which are derived from the channel responses for each receive path are provided to an STC decoder 100, which provides STC decoding on both received paths to recover the transmitted symbols. The channel reconstruction information provides equalization information to the STC decoder 100 sufficient to remove the effects of the transmission channel when processing the respective frequency domain symbols

The recovered symbols are placed back in order using symbol de-interleaver logic 102, which corresponds to the symbol interleaver logic 58 of the transmitter. The de-interleaved symbols are then demodulated or de-mapped to a corresponding bitstream using de-mapping logic 104. The bits are then de-interleaved using bit de-interleaver logic 106, which corresponds to the bit interleaver logic 54 of the transmitter architecture. The de-interleaved bits are then processed by rate de-matching logic 108 and presented to channel decoder logic 110 to recover the initially scrambled data and the CRC checksum. Accordingly, CRC logic 112 removes the CRC checksum, checks the scrambled data in traditional fashion, and provides it to the de-scrambling logic 114 for de-scrambling using the known base station de-scrambling code to recover the originally transmitted data 116.

Copy provided by USPTO from the IFW Image Database on 05/12/2005

In parallel to recovering the data 116, a CQI, or at least information sufficient to create a CQI at the base station 14, is determined and transmitted to the base station 14. As noted above, the CQI in a preferred embodiment is a function of the carrier-to-interference ratio (CIR), as well as the degree to which the channel response varies across the various sub-carriers in the OFDM frequency band. For this embodiment, the channel gain for each sub-carrier in the OFDM frequency band being used to transmit information are compared relative to one another to determine the degree to which the channel gain varies across the OFDM frequency band. Although numerous techniques are available to measure the degree of variation, one technique is to calculate the standard deviation of the channel gain for each sub-carrier throughout the OFDM frequency band being used to transmit data.

Copy provided by USPTO from the IFW Image Database on 05/12/2005

WE CLAIM:

1. A method comprising:
   - provisioning a pilot pattern for sub-carriers in an OFDM environment;
   - wherein said pilot pattern facilitates sub-carrier transmissions via 4 x n antennas (where n>1)

Copy provided by USPTO from the IFW Image Database on 05/12/2005

Figure 1

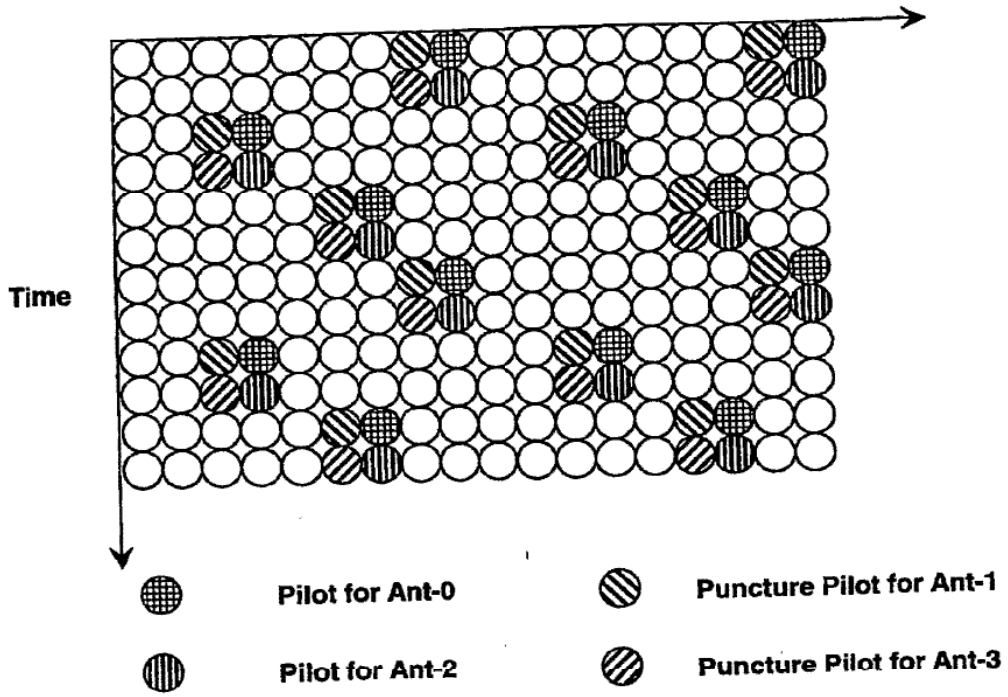

Copy provided by USPTO from the IFW Image Database on 05/12/2005

Figure 2(a)

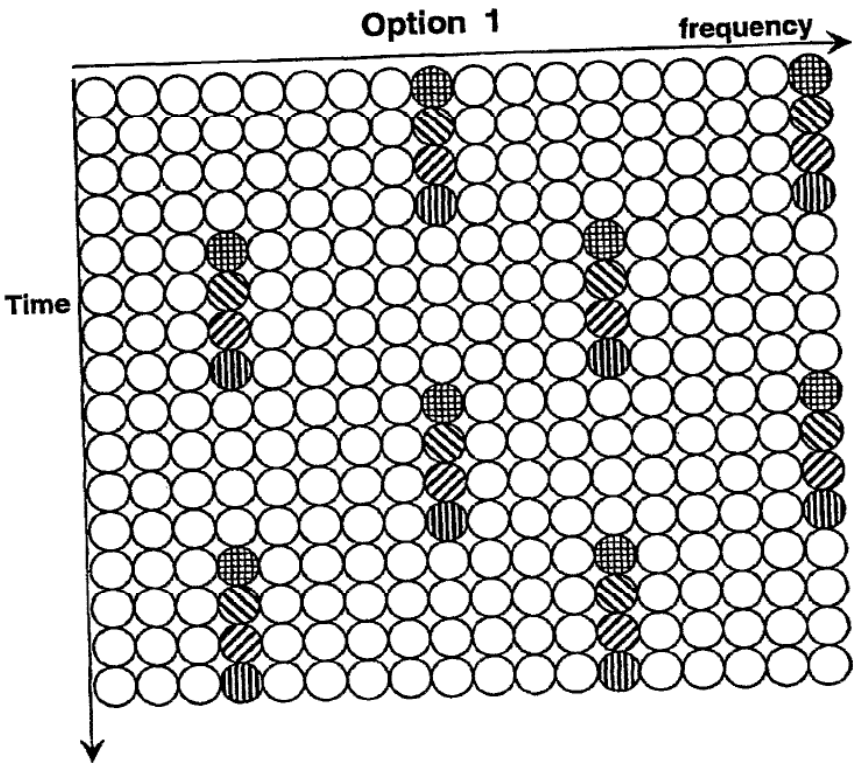

Copy provided by USPTO from the IFW Image Database on 05/12/2005

Figure 2(b)

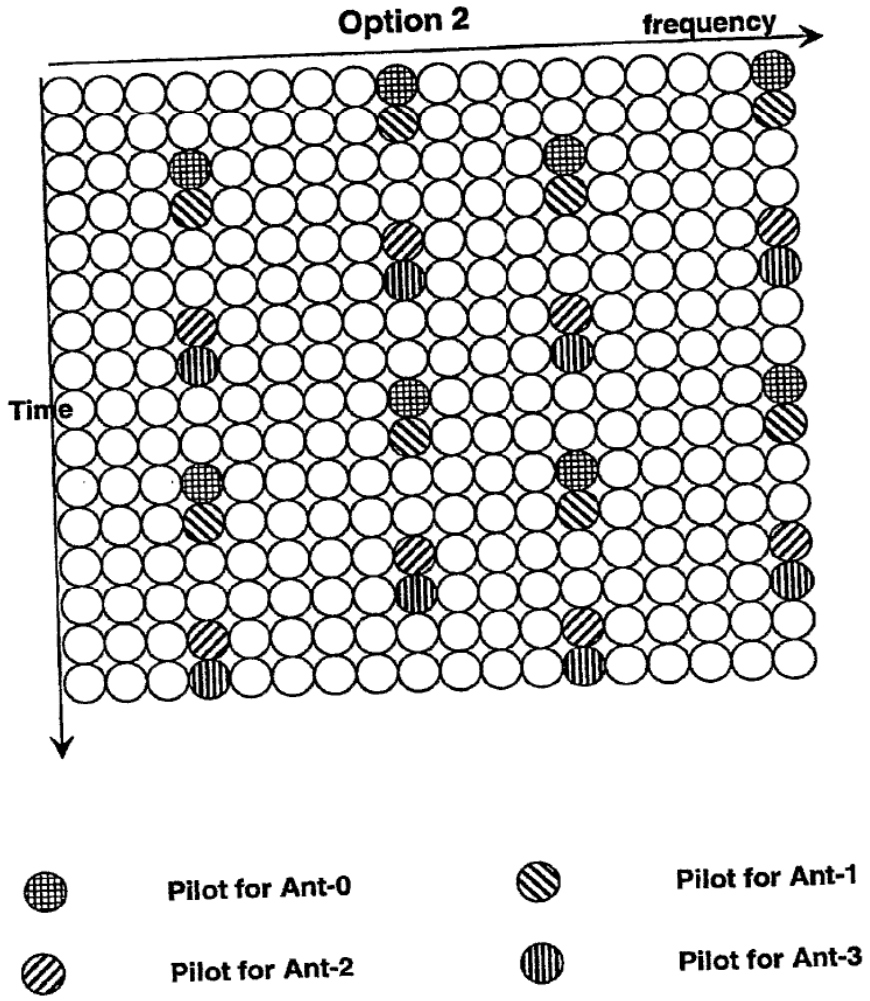

Copy provided by USPTO from the IFW Image Database on 05/12/2005

Figure 3(a)

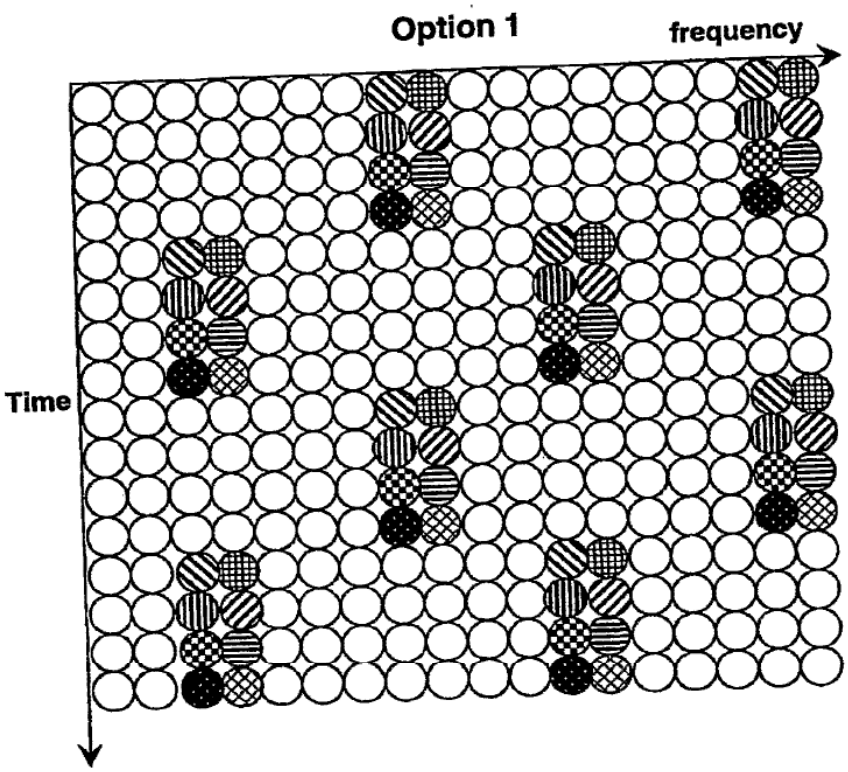

Copy provided by USPTO from the IFW Image Database on 05/12/2005

Figure 3(b)

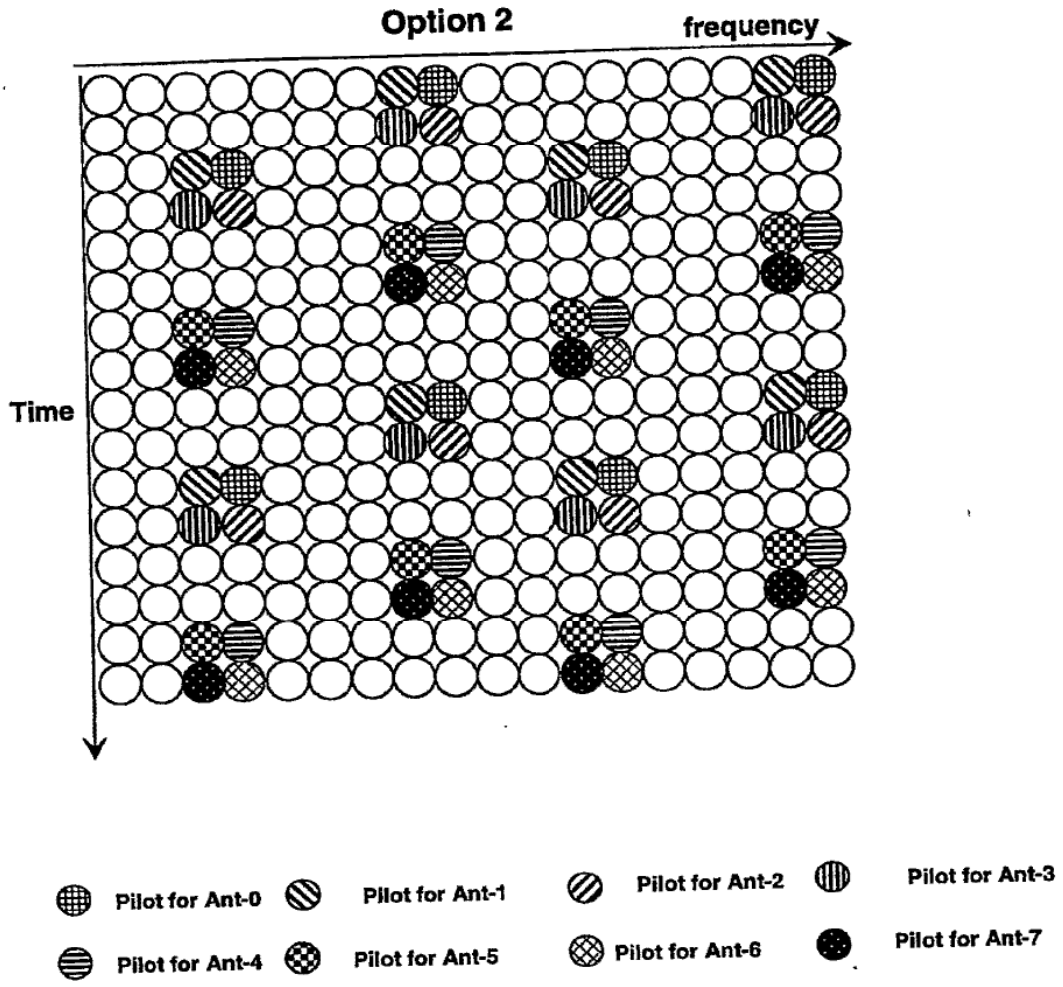

Copy provided by USPTO from the IFW Image Database on 05/12/2005

Figure 4(a)

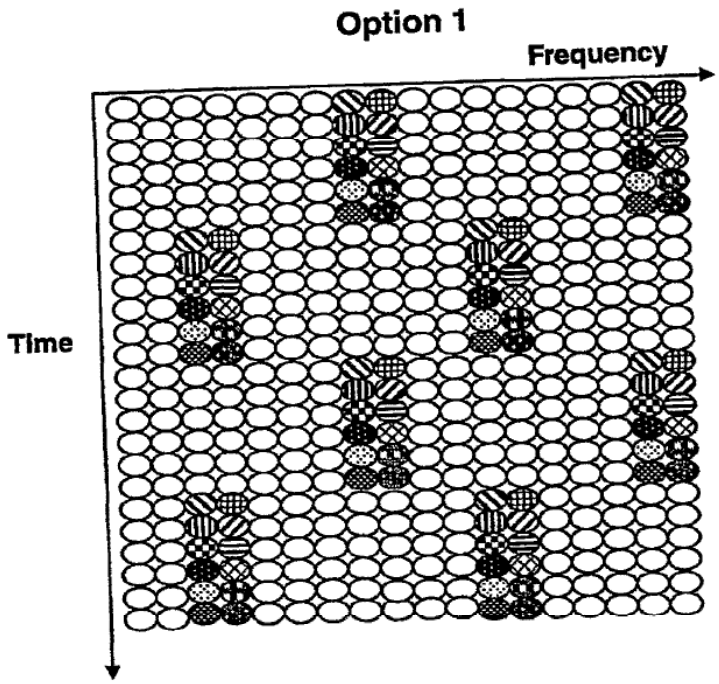

Copy provided by USPTO from the IFW Image Database on 05/12/2005

Figure 4(b)

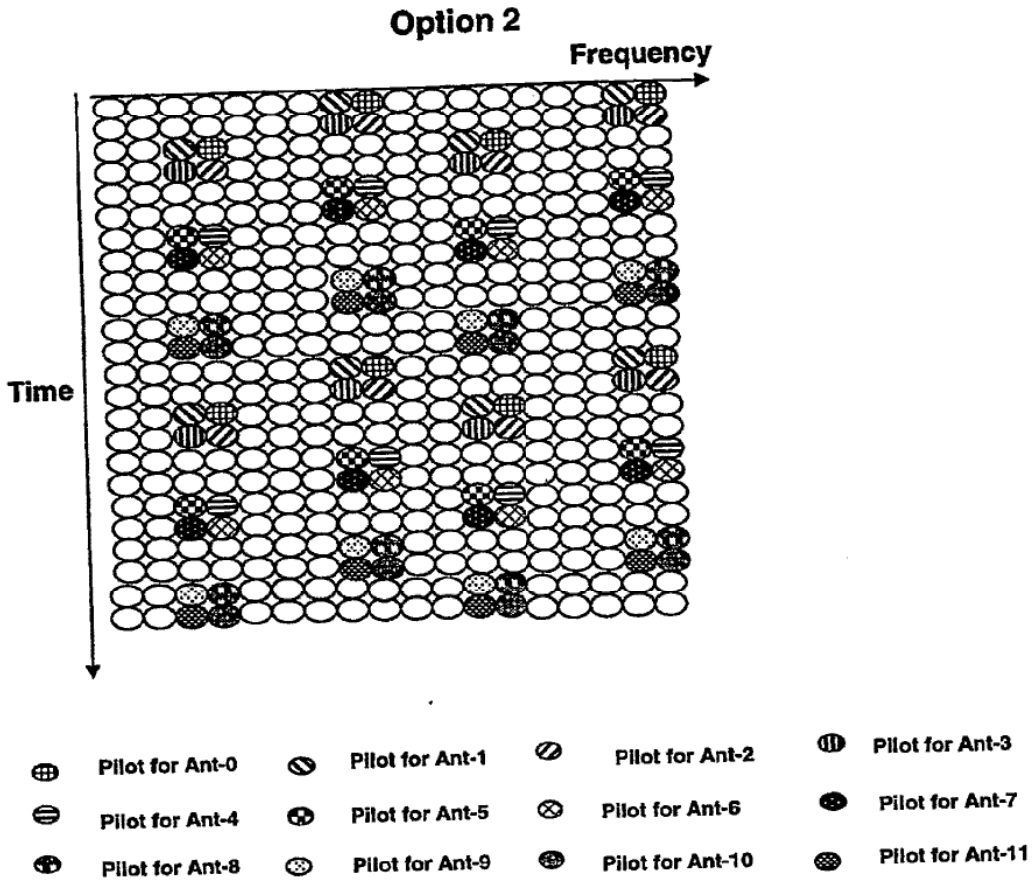

Copy provided by USPTO from the IFW Image Database on 05/12/2005

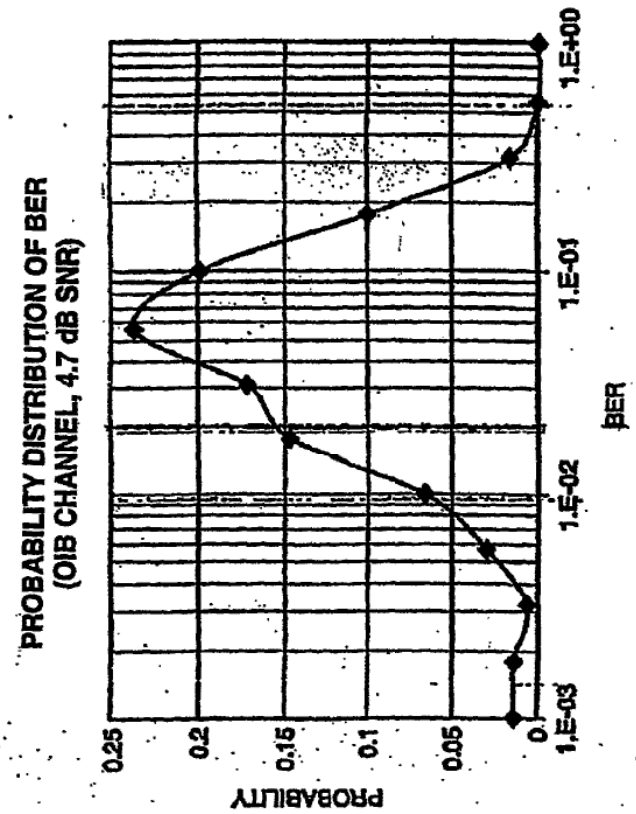

Figure 5

Copy provided by USPTO from the IFW Image Database on 05/12/2005

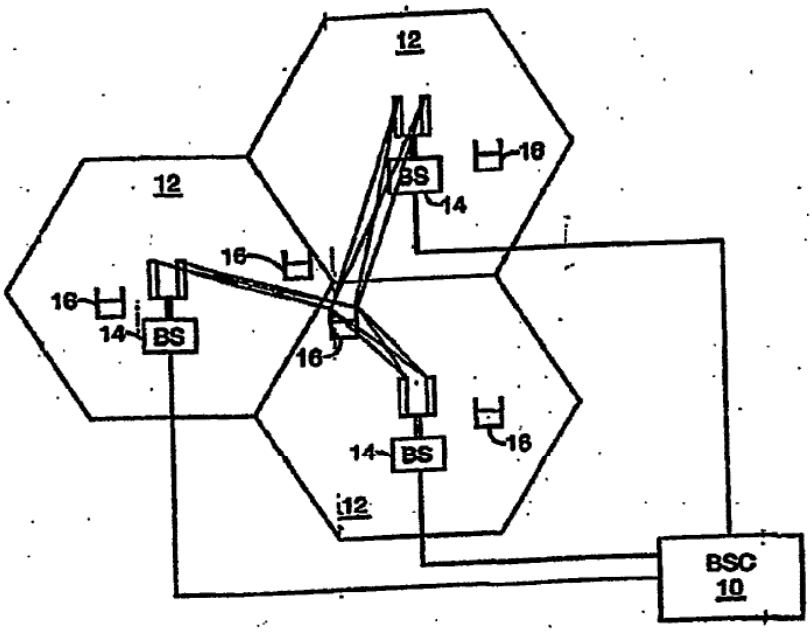

Figure 6

Copy provided by USPTO from the IFW Image Database on 05/12/2005

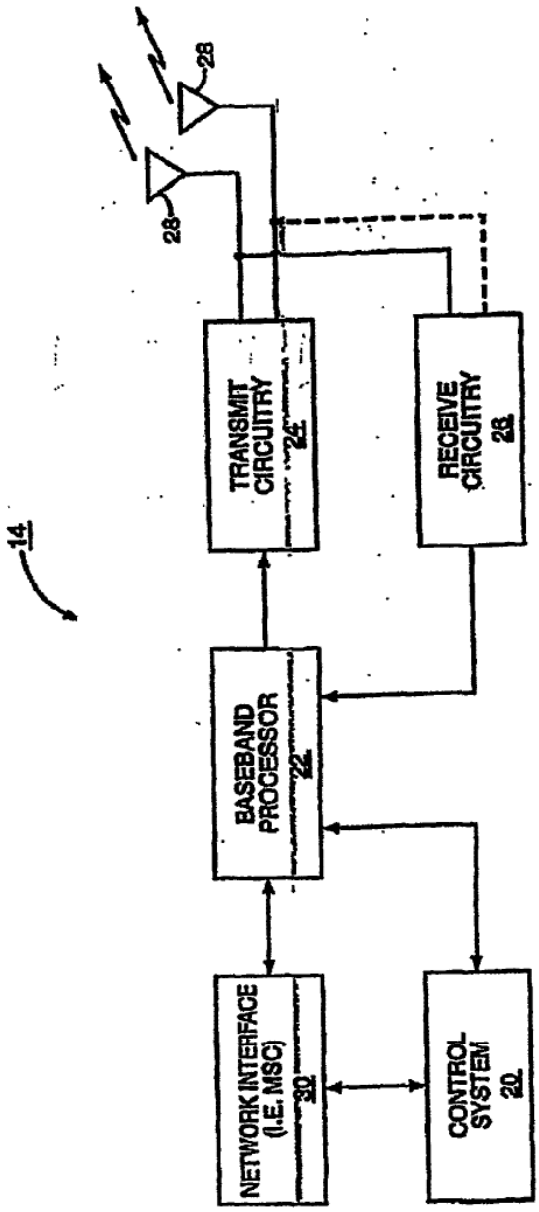

Figure 7

Copy provided by USPTO from the IFW Image Database on 05/12/2005

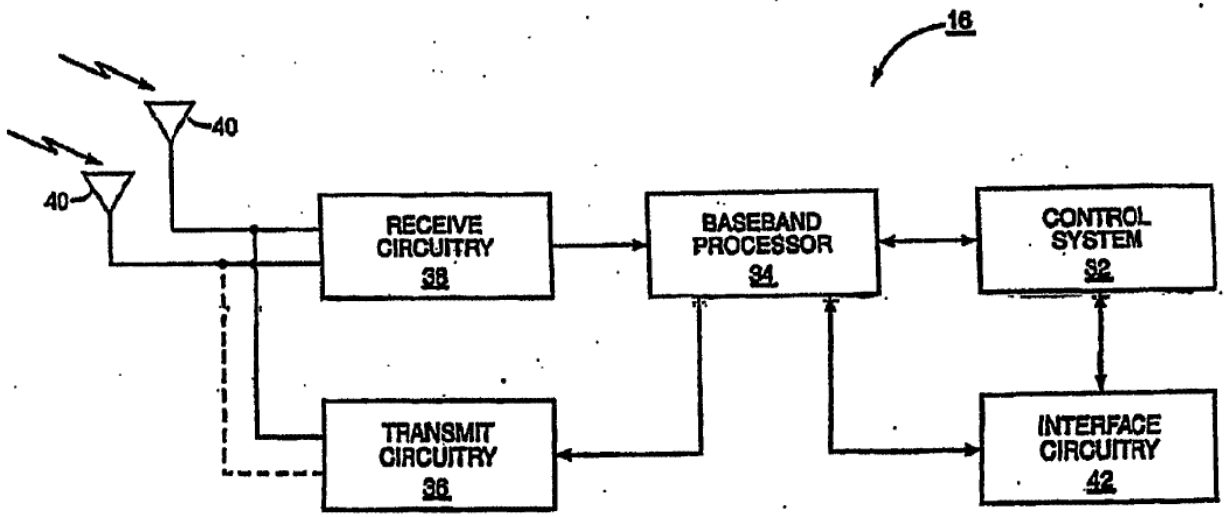

Figure 8

Copy provided by USPTO from the IFW Image Database on 05/12/2005

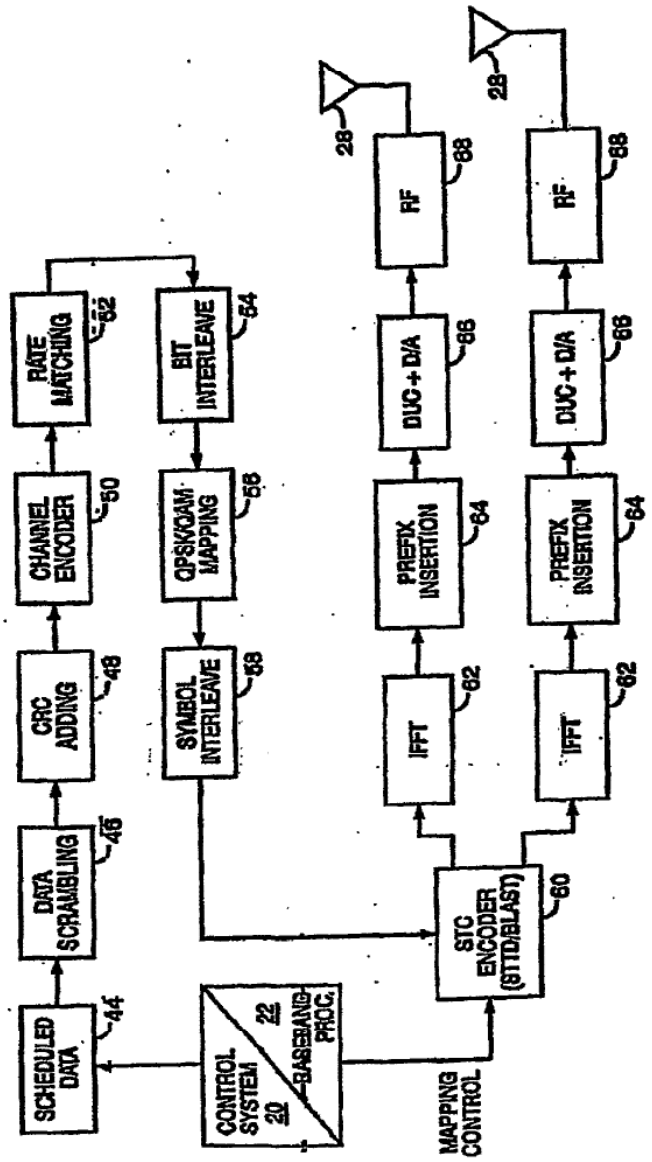

Figure 9

Copy provided by USPTO from the IFW Image Database on 05/12/2005

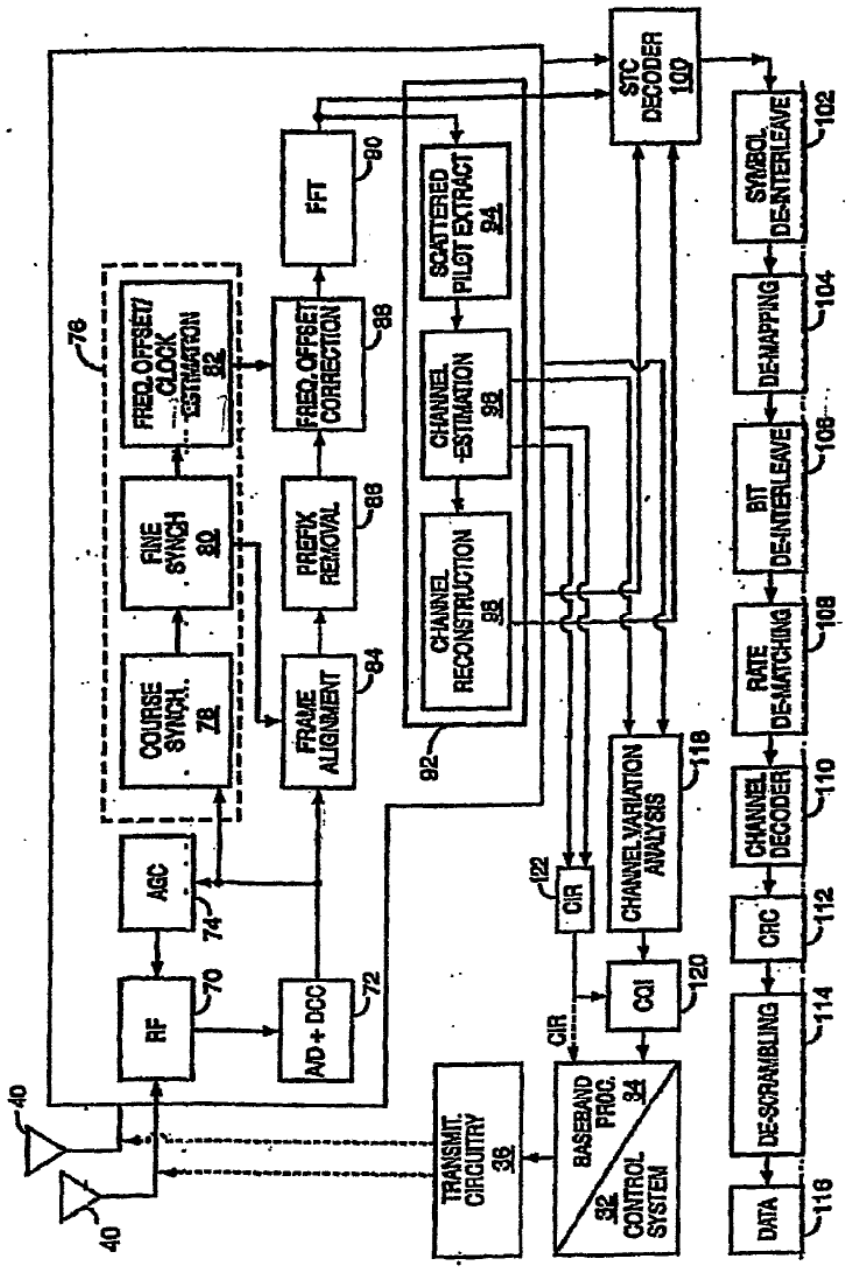

Figure 10

Copy provided by USPTO from the IFW Image Database on 05/12/2005

SHORT DATA BURST SYSTEMS AND METHODS

Field of the Invention

This invention generally relates to the field of wireless communications. More specifically to short data burst support for broadband mobile wireless metropolitan area networks including networks operating according to the IEEE 802.16(e) standard.

Background of the Invention

Sleep Mode

- There are may problems associated with the current 802.16e standard draft, p802.16e/D5, including for example:
  - Any DL/UL PDU transmission within a listening-window are performed as normal mode (don't mean mode transition) – It means that a UL PDU within listening window cannot trigger a mode transition. That is to say, if a MSS wants to return to normal mode, the MSS will have to wait until sleep-window which results in unnecessary delay
  - Any DL/UL short data traffic to/from a MSS in sleep mode must be sent during listening window of a MSS. There is room for improvement for applications with deterministic traffic pattern.
  - Any UL PDU sent during sleep-window, other than RNG-REQ and DPC_REQ, is an indication of mode transition of a MSS in sleep mode – It means that UL SDB must be sent either during listening-window, which results in unnecessary delay or sent after entering normal mode, which causes unnecessary mode transmission overhead

Idle Mode

- Numerous issues exist with respect to the current standard notwithstanding a chained MBS IE has been introduced including:
  - No DL unicast SDB during idle mode is supported
  - No UL SDB during idle mode is supported

Copy provided by USPTO from the IFW Image Database on 05/12/2005

Summary of the Invention

It is an object of the invention to provide a short data burst system and method for broadband mobile wireless metropolitan area networks (802.16e).

Sleep Mode

It is anther object of the invention to provide a DL short data burst (SDB)

- In accordance with a one aspect of the invention the DL SDB may be provisioned as follows:
  - Define Forecast IE (offset and duration) transmitted during listening-window to schedule a future DL SDB/MBS/Configuration transmission.
  - Use normal DL MAP IE during listening-window to assign DL resource for data transmission of a connection
  - Use normal UL MAP IE coupled with the DL MAP IE to assign UL resource for ARQ purpose for a ARQ enabled connection

- In accordance with another aspect of the invention the DL SDB may be provisioned as follows:
  - Define Forecast IE (offset and duration) transmitted during listening-window to schedule a future DL SDB/MBS/Configuration transmission
  - Define DL-SDB with possible UL resource assigned for ACK purpose for a ARQ enabled connection

It is another object of the invention UL SDB

- In accordance with another aspect of the invention the UP SDM may be provisioned as follows:
  - Define Forecast IE (offset and duration) transmitted during listening-window to schedule future UL polling or UL data transmission
  - Any UL PDU (except RNG-REQ/DPC-REQ) transmitted at any time during sleep window may indicate a mode transition to normal mode
  - Use SDB-BW request header transmitted at any time to indicate a SDB bandwidth request without triggering a mode transition
  - Use normal UL MAP IE to assign UL resource required by SDB-BW request header
  - Use ACK message to acknowledge the UL data transmission

- In accordance with another aspect of the invention the UP SDB may be provisioned as follows:
  - Define Forecast IE (offset and duration) transmitted during listening-window to schedule future UL polling or UL data transmission
  - Any UL PDU (except RNG-REQ/DPC-REQ) transmitted (requested by normal BW request header) at any time during sleep window may indicate a mode transition to normal mode
  - To use SDB-BW request header transmitted at any time to indicate a SDB bandwidth request without triggering a mode transition
  - To use defined UL-SDB IE to allocate UL resource and, at the same time, to indicate ACK mechanism if the UL data is for a ARQ enabled connection

- In accordance with another aspect of the invention the UP SDB may be provisioned as follows:

Copy provided by USPTO from the IFW Image Database on 05/12/2005

- Define Forecast IE (offset and duration) transmitted during listening-window to schedule future UL polling or UL data transmission
- Any UL PDU (except RNG-REQ/DPC-REQ) transmitted (requested by normal BW request header) at any time during sleep mode may indicate a mode transition to normal mode
- Define UL Grant Management subheader to indicate a SDB PDU and any UL PDU transmitted along with this UL SDB Grant Management subheader may not indicate a mode transition to normal mode
- Define UL-SDB IE to allocate UL resource and, at the same time, to indicate ACK mechanism if the UL data is for a ARQ enabled connection

Idle Mode

It is anther object of the invention to provide a DL short data burst (SDB)

- In accordance with another aspect of the invention the DL SDB (assuming Non-ARQ SDB) may be provisioned as follows:
  - At entering idle mode, the basic CID and the connection CID associated with the SMS (short message service) application may be kept at both MSS and serving BS. All security related profiles may be also kept by the two sides
  - DL SDB can be sent during a MSS's Paging Listening interval by using the normal DL MAP IE

- In accordance with another aspect of the invention the DL SDB (assuming ARQ-enabled SDB) may be provisioned as follows:
  - At entering idle mode, the basic CID and the connection CID associated with the SMS application may be kept at both MSS and serving BS. All security related profiles may be also kept by the two sides
  - PGE-ADV message may be sent during a MSS's Paging Listening interval . The MSS perform paging-response by sending ranging code and RNG-REQ message.
  - After the successful ranging, the BS that received the response may send defined DL SDB IE to allocate DL resource and , at the same time, to allocate UL resource for the purpose of ACK/NACK
  - The MSS may resume idle mode operation after normal ARQ procedure (either send ACK or send max number of NACKs)

It is anther object of the invention to provide a UL short data burst (SDB)

- In accordance with another aspect of the invention the UL SDB may be provisioned as follows:
  - MSS performs initial ranging
  - MSS sends RNG-REQ to the covering BS to indicate the BS ID from there the MSS entered into idle mode and to indicate a UL SDB request
  - The covering BS obtains the keying profiles from the BS from where the MSS entered idle mode
  - The covering BS then uses normal UL MAP IE to assign UL resource
  - The covering BS may send ARQ message if the connection is ARQ enabled one

Copy provided by USPTO from the IFW Image Database on 05/12/2005

Brief Description of the Figures

Figure 1 provides an UL-SDB-BW request header in accordance with an embodiment of the invention

Figure 2 is a block representation of a cellular communication system.

Figure 3 is a block representation of a base station according to one embodiment of the present invention.

Figure 4 is a block representation of a mobile terminal according to one embodiment of the present invention.

Figure 5 is a logical breakdown of an OFDM transmitter architecture according to one embodiment of the present invention.

Figure 6 is a logical breakdown of an OFDM receiver architecture according to one embodiment of the present invention.

Figure 7 illustrates a pattern of sub-carriers for carrying pilot symbols in an OFDM environment.

Detailed Description of Embodiments of the Invention

The following modification is based on IEEE standard p802.16e/D5 which is hereby incorporated by reference.

Figure 1 provides a Short Data Burst Bandwidth (UL-SDB-BW) Request Header in accordance with an embodiment of the invention. The UL Short Data Burst Bandwidth (UL-SDB-BW) Request Header may be used by a MSS in sleep mode to send a UL resource request for short-data-burst transmission.

In accordance with an embodiment of the invention UL Short Data Burst Bandwidth (UL-SDB-BW) Request PDU may include UL –SDB-BW request Header and may not contain a payload.

In accordance with an embodiment of the invention the UL-SDB-BW request header may have the following properties:

a) The length of the header is 6 bytes
b) The HT field is set 1, indicating a BW request header
c) The EC field is set 0, indicating no encryption
d) The CID indicates the connection CID for which the UL bandwidth is requested
e) The Type field is '100'
f) The BR field indicates the number of bytes requested (in unit of byte)

A MSS receiving a UL-SDB-BW request header on the downlink may discard the PDU.

The fields of the UL-SDB-BW request header in accordance with an embodiment of the invention are set out in Table 1.

Table 1 -- UL-SDB-BW request fieds

Name	Length (bits)	Description

Copy provided by USPTO from the IFW Image Database on 05/12/2005

BR	17 bits	Number of bytes requested (in unit of byte)
Connection CID	16 bits	Connection CID for which the UL bandwidth is requested
HT	1 bit	Header Type = 1
EC	1 bit	Always set to 0
Type	3 bits	Type = 100
HCS	8 bits	Header Check Sequence (same usage as HCS entry in Table 5)
RES	1 bit	Reserved bit

In accordance with an embodiment of the invention Table 2 provides a Grant Management subheader.

This subheader may be used by a MSS in sleep mode to indicate that the payload in this PDU is a UL Short Data Burst. When used for this purpose, the all 16 bits of PBR field may be set to 0.

Table 2 – Grant Management subheader fields

Name	Length (bits)	Description
PBR	16	PiggyBack Request The number of bytes of uplink bandwidth requested by the SS/MSS. The bandwidth request is for the CID. The request shall not include any PHY overhead. The request may be incremental. If this subheader is sent by a MSS in sleep mode and all bits of this field is set to 0, this field indicates that the payload of this PDU is a UL short data burst.
PM	1	Poll-Me 0 = No action 1 = Used by the SS/MSS to request bandwidth poll.
SI	1	Slip Indicator 0 = No action 1 = Used by the SS/MSS to indicate a slip of uplink grants relative to the uplink queue depth.

The location Update request TLV (Type/Length/Value) (see 11.5, in p802.16e/D5) may be used to indicate a location update request or UL SDB indication by a MSS in idle mode. When used to indicate a UL SDB, the MSS is informing a BS that the purpose of ranging is to adjust time, power and so on in order to send UL short data burst. For any UL SDB transmission from a MSS in idle mode, the BS may update the location of the MSS at the same time.

The location Update request TLV (see 11.6 in p802.16e/D5) may be used as a location update response or a DL SDB indication. When used as DL SDB indication, the MSS may understand that the BS is going to send DL

Copy provided by USPTO from the IFW Image Database on 05/12/2005

SDB after finishing the ranging.

Table 3 provides a SDB Forecast IE in accordance with an embodiment of the invention.

This IE may be used by a BS to alert MSSs regarding the future DL SDB transmission and UL SDB polling. After receiving this IE, a MSS, if its CID is included in this IE, may monitor the DL-MAP and UL-MAP in the frame indicated by Frame_offset in this IE.

Table 3 DL_SDB IE format

Syntax	Size	Notes
SDB_Forecast_IE() {		
Extended DIUC	4 bits	0x07
Length	4 bits	
Num_MSSs	4 bits	
For (i=0;i< Num_MSSs;i++) {		
CID	16 bits	
Frame_offset	4 bits	To indicate the frame where DL SDB to be transmitted or UL SDB to be polled (Frame offset is relative to the current frame)
}		
}		

Table 4 provides a DL SDB IE in accordance with an embodiment of the invention.

This IE may be used by a BS to assign DL resource to a MSS for the purpose of short data burst. The UL resource may be assigned for the purpose of acknowledgment by the MSS.

Table 4 DL_SDB IE format

Syntax	Size	Notes
DL_SDB_IE() {		
Extended DIUC	4 bits	0x07
Length	4 bits	
Num_assignment	4 bits	
For (i=0;i< Num_assignment;i++) {		
CID	10 bits	
OFDMA Symbol offset	8 bits	
Subchannel offset	8 bits	
Boosting	3 bits	
No. OFDMA Symbol	7 bits	
No. Subchannels	6 bits	
Repetition Coding Indication	2 bits	

Copy provided by USPTO from the IFW Image Database on 05/12/2005

UL_ARQ_resource_assigned	1 bit	0: UL resource for the MSS to send ARQ message is not assigned in this IE 1: 0: UL resource for the MSS to send ARQ message is not assigned in this IE
If (UL_ARQ_resource_assigned == 1)		
{		
Duration	10 bits	
Repetition Coding_indication	2 bits	
}		
}		
Reserved	*variable*	Padding bits to ensure octet aligned
}		

Table 5 provides a UL SDB IE in accordance with an embodiment of the invention.

This IE may be used by a BS to assign UL resource to a MSS for the purpose of short data burst. The acknowledgment to the UL short data burst transmission may be enabled or disabled dynamically.

Table 5 UL_SDB IE format

Syntax	Size	Notes
UL_SDB_IE() {		
Extended UIUC	4 bits	0x06
Length	4 bits	
Num_assignment	4 bits	
For (i=0;i< Num_assignment;i++) {		
CID	10 bits	
ARQ_enabled	1 bit	1: ARQ enabled and the MSS shall wait for receiving a ACK for this UL data burst transmission 0: NON-ARQ enabled and the MSS shouldn't expect a ACK for this UL data burst transmission
Duration	10 bits	
Repitition Coding Indication	2 bits	
}		
Reserved	*variable*	Padding bits to ensure octet aligned

Copy provided by USPTO from the IFW Image Database on 05/12/2005

}		

Table 6 provides an SDB_Ack IE in accordance with an embodiment of the invention.

This IE may be used by a BS to acknowledge the UL SDB transmission.

Table 6 SDB_Ack IE format

Syntax	Size	Notes
SDB_Ack_IE() {		
Extended UIUC	4 bits	0x06
Length	4 bits	
Ack bitmap	Variable	The length is set to the number of assignments with AQR_enabled indicator equaling to 1 in the UL_SDB-in_Idle IE corresponding to the UL SDB transmission in the previous frame. 1: Acked; 0:Nacked
Reserved	*Variable*	Padding bits to ensure octet aligned
}		

Table 7 provides RNG_REQ Message Encodings in accordance with an embodiment of the invention.

Table 7 -- RNG_REQ Message Encodings

Name	Type (1byte)	Length	Value
Location Update Request/SDB Indication		1	Bit 0: location update request Bit 1: SDU indication Bits 2-7: reserved

Table 8 provides RNG_RSP Message Encodings in accordance with an embodiment of the invention.

Table 8 -- RNG_RSP Message Encodings

Name	Type (1byte)	Length	Value
Location Update Request/SDB Indication		1	Bit 0: location update response Bit 1: SDU indication Bits 2-7: Reserved

Copy provided by USPTO from the IFW Image Database on 05/12/2005

With reference to Figure 2, a base station controller (BSC) 10 controls wireless communications within multiple cells 12, which are served by corresponding base stations (BS) 14. In general, each base station 14 facilitates communications using OFDM with mobile terminals 16, which are within the cell 12 associated with the corresponding base station 14. The movement of the mobile terminals 16 in relation to the base stations 14 results in significant fluctuation in channel conditions. As illustrated, the base stations 14 and mobile terminals 16 may include multiple antennas to provide spatial diversity for communications.

A high level overview of the mobile terminals 16 and base stations 14 of the present invention is provided prior to delving into the structural and functional details of the preferred embodiments. With reference to Figure 3, a base station 14 configured according to one embodiment of the present invention is illustrated. The base station 14 generally includes a control system 20, a baseband processor 22, transmit circuitry 24, receive circuitry 26, multiple antennas 28, and a network interface 30. The receive circuitry 26 receives radio frequency signals bearing information from one or more remote transmitters provided by mobile terminals 16 (illustrated in Figure 4). Preferably, a low noise amplifier and a filter (not shown) cooperate to amplify and remove broadband interference from the signal for processing. Downconversion and digitization circuitry (not shown) will then downconvert the filtered, received signal to an intermediate or baseband frequency signal, which is then digitized into one or more digital streams.

The baseband processor 22 processes the digitized received signal to extract the information or data bits conveyed in the received signal. This processing typically comprises demodulation, decoding, and error correction operations. As such, the baseband processor 22 is generally implemented in one or more digital signal processors (DSPs) or application-specific integrated circuits (ASICs). The received information is then sent across a wireless network via the network interface 30 or transmitted to another mobile terminal 16 serviced by the base station 14.

On the transmit side, the baseband processor 22 receives digitized data, which may represent voice, data, or control information, from the network interface 30 under the control of control system 20, and encodes the data for transmission. The encoded data is output to the transmit circuitry 24, where it is modulated by a carrier signal having a desired transmit frequency or frequencies. A power amplifier (not shown) will amplify the modulated carrier signal to a level appropriate for transmission, and deliver the modulated carrier signal to the

Copy provided by USPTO from the IFW Image Database on 05/12/2005

antennas 28 through a matching network (not shown). Modulation and processing details are described in greater detail below.

With reference to Figure 4, a mobile terminal 16 configured according to one embodiment of the present invention is illustrated. Similarly to the base station 14, the mobile terminal 16 will include a control system 32, a baseband processor 34, transmit circuitry 36, receive circuitry 38, multiple antennas 40, and user interface circuitry 42. The receive circuitry 38 receives radio frequency signals bearing information from one or more base stations 14. Preferably, a low noise amplifier and a filter (not shown) cooperate to amplify and remove broadband interference from the signal for processing. Downconversion and digitization circuitry (not shown) will then downconvert the filtered, received signal to an intermediate or baseband frequency signal, which is then digitized into one or more digital streams.

The baseband processor 34 processes the digitized received signal to extract the information or data bits conveyed in the received signal. This processing typically comprises demodulation, decoding, and error correction operations, as will be discussed on greater detail below. The baseband processor 34 is generally implemented in one or more digital signal processors (DSPs) and application specific integrated circuits (ASICs).

For transmission, the baseband processor 34 receives digitized data, which may represent voice, data, or control information, from the control system 32, which it encodes for transmission. The encoded data is output to the transmit circuitry 36, where it is used by a modulator to modulate a carrier signal that is at a desired transmit frequency or frequencies. A power amplifier (not shown) will amplify the modulated carrier signal to a level appropriate for transmission, and deliver the modulated carrier signal to the antennas 40 through a matching network (not shown). Various modulation and processing techniques available to those skilled in the art are applicable to the present invention.

In OFDM modulation, the transmission band is divided into multiple, orthogonal carrier waves. Each carrier wave is modulated according to the digital data to be transmitted. Because OFDM divides the transmission band into multiple carriers, the bandwidth per carrier decreases and the modulation time per carrier increases. Since the multiple carriers are transmitted in parallel, the transmission rate for the digital data, or symbols, on any given carrier is lower than when a single carrier is used.

Copy provided by USPTO from the IFW Image Database on 05/12/2005

OFDM modulation requires the performance of an Inverse Fast Fourier Transform (IFFT) on the information to be transmitted. For demodulation, the performance of a Fast Fourier Transform (FFT) on the received signal is required to recover the transmitted information. In practice, the IFFT and FFT are provided by digital signal processing carrying out an Inverse Discrete Fourier Transform (IDFT) and Discrete Fourier Transform (DFT), respectively. Accordingly, the characterizing feature of OFDM modulation is that orthogonal carrier waves are generated for multiple bands within a transmission channel. The modulated signals are digital signals having a relatively low transmission rate and capable of staying within their respective bands. The individual carrier waves are not modulated directly by the digital signals. Instead, all carrier waves are modulated at once by IFFT processing.

In the preferred embodiment, OFDM is used for at least the downlink transmission from the base stations 14 to the mobile terminals 16. Each base station 14 is equipped with n transmit antennas 28, and each mobile terminal 16 is equipped with m receive antennas 40. Notably, the respective antennas can be used for reception and transmission using appropriate duplexers or switches and are so labeled only for clarity.

With reference to Figure 5, a logical OFDM transmission architecture is provided according to one embodiment. Initially, the base station controller 10 will send data to be transmitted to various mobile terminals 16 to the base station 14. The base station 14 may use the CQIs associated with the mobile terminals to schedule the data for transmission as well as select appropriate coding and modulation for transmitting the scheduled data. The CQIs may be directly from the mobile terminals 16 or determined at the base station 14 based on information provided by the mobile terminals 16. In either case, the CQI for each mobile terminal 16 is a function of the degree to which the channel amplitude (or response) varies across the OFDM frequency band.

The scheduled data 44, which is a stream of bits, is scrambled in a manner reducing the peak-to-average power ratio associated with the data using data scrambling logic 46. A cyclic redundancy check (CRC) for the scrambled data is determined and appended to the scrambled data using CRC adding logic 48. Next, channel coding is performed using channel encoder logic 50 to effectively add redundancy to the data to facilitate recovery and error correction at the mobile terminal 16. Again, the channel coding for a particular mobile terminal 16 is based on the CQI. The channel encoder logic 50 uses known Turbo encoding techniques in one

Copy provided by USPTO from the IFW Image Database on 05/12/2005

embodiment. The encoded data is then processed by rate matching logic 52 to compensate for the data expansion associated with encoding.

Bit interleaver logic 54 systematically reorders the bits in the encoded data to minimize the loss of consecutive data bits. The resultant data bits are systematically mapped into corresponding symbols depending on the chosen baseband modulation by mapping logic 56. Preferably, Quadrature Amplitude Modulation (QAM) or Quadrature Phase Shift Key (QPSK) modulation is used. The degree of modulation is preferably chosen based on the CQI for the particular mobile terminal. The symbols may be systematically reordered to further bolster the immunity of the transmitted signal to periodic data loss caused by frequency selective fading using symbol interleaver logic 58.

At this point, groups of bits have been mapped into symbols representing locations in an amplitude and phase constellation. When spatial diversity is desired, blocks of symbols are then processed by space-time block code (STC) encoder logic 60, which modifies the symbols in a fashion making the transmitted signals more resistant to interference and more readily decoded at a mobile terminal 16. The STC encoder logic 60 will process the incoming symbols and provide n outputs corresponding to the number of transmit antennas 28 for the base station 14. The control system 20 and/or baseband processor 22 will provide a mapping control signal to control STC encoding. At this point, assume the symbols for the n outputs are representative of the data to be transmitted and capable of being recovered by the mobile terminal 16. See A.F. Naguib, N. Seshadri, and A.R. Calderbank, "Applications of space-time codes and interference suppression for high capacity and high data rate wireless systems," Thirty-Second Asilomar Conference on Signals, Systems & Computers, Volume 2, pp. 1803-1810, 1998, which is incorporated herein by reference in its entirety.

For the present example, assume the base station 14 has two antennas 28 (n=2) and the STC encoder logic 60 provides two output streams of symbols. Accordingly, each of the symbol streams output by the STC encoder logic 60 is sent to a corresponding IFFT processor 62, illustrated separately for ease of understanding. Those skilled in the art will recognize that one or more processors may be used to provide such digital signal processing, alone or in combination with other processing described herein. The IFFT processors 62 will preferably operate on the respective symbols to provide an inverse Fourier Transform. The output of the IFFT processors 62 provides symbols in the time domain. The time domain symbols are grouped into frames, which are associated with a prefix by like insertion logic 64. Each of the resultant signals is up-converted in the

Copy provided by USPTO from the IFW Image Database on 05/12/2005

digital domain to an intermediate frequency and converted to an analog signal via the corresponding digital up-conversion (DUC) and digital-to-analog (D/A) conversion circuitry 66. The resultant (analog) signals are then simultaneously modulated at the desired RF frequency, amplified, and transmitted via the RF circuitry 68 and antennas 28. Notably, pilot signals known by the intended mobile terminal 16 are scattered among the sub-carriers. The mobile terminal 16, which is discussed in detail below, will use the pilot signals for channel estimation.

Reference is now made to Figure 6 to illustrate reception of the transmitted signals by a mobile terminal 16. Upon arrival of the transmitted signals at each of the antennas 40 of the mobile terminal 16, the respective signals are demodulated and amplified by corresponding RF circuitry 70. For the sake of conciseness and clarity, only one of the two receive paths is described and illustrated in detail. Analog-to-digital (A/D) converter and down-conversion circuitry 72 digitizes and downconverts the analog signal for digital processing. The resultant digitized signal may be used by automatic gain control circuitry (AGC) 74 to control the gain of the amplifiers in the RF circuitry 70 based on the received signal level.

Initially, the digitized signal is provided to synchronization logic 76, which includes coarse synchronization logic 78, which buffers several OFDM symbols and calculates an auto-correlation between the two successive OFDM symbols. A resultant time index corresponding to the maximum of the correlation result determines a fine synchronization search window, which is used by fine synchronization logic 80 to determine a precise framing starting position based on the headers. The output of the fine synchronization logic 80 facilitates frame acquisition by frame alignment logic 84. Proper framing alignment is important so that subsequent FFT processing provides an accurate conversion from the time to the frequency domain. The fine synchronization algorithm is based on the correlation between the received pilot signals carried by the headers and a local copy of the known pilot data. Once frame alignment acquisition occurs, the prefix of the OFDM symbol is removed with prefix removal logic 86 and resultant samples are sent to frequency offset correction logic 88, which compensates for the system frequency offset caused by the unmatched local oscillators in the transmitter and the receiver. Preferably, the synchronization logic 76 includes frequency offset and clock estimation logic 82, which is based on the headers to help estimate such effects on the transmitted signal and provide those estimations to the correction logic 88 to properly process OFDM symbols.

Copy provided by USPTO from the IFW Image Database on 05/12/2005

At this point, the OFDM symbols in the time domain are ready for conversion to the frequency domain using FFT processing logic 90. The results are frequency domain symbols, which are sent to processing logic 92. The processing logic 92 extracts the scattered pilot signal using scattered pilot extraction logic 94, determines a channel estimate based on the extracted pilot signal using channel estimation logic 96, and provides channel responses for all sub-carriers using channel reconstruction logic 98. In order to determine a channel response for each of the sub-carriers, the pilot signal is essentially multiple pilot symbols that are scattered among the data symbols throughout the OFDM sub-carriers in a known pattern in both time and frequency. Figure 7 illustrates an exemplary scattering of pilot symbols among available sub-carriers over a given time and frequency plot in an OFDM environment. Continuing with Figure 6, the processing logic compares the received pilot symbols with the pilot symbols that are expected in certain sub-carriers at certain times to determine a channel response for the sub-carriers in which pilot symbols were transmitted. The results are interpolated to estimate a channel response for most, if not all, of the remaining sub-carriers for which pilot symbols were not provided. The actual and interpolated channel responses are used to estimate an overall channel response, which includes the channel responses for most, if not all, of the sub-carriers in the OFDM channel.

The frequency domain symbols and channel reconstruction information, which are derived from the channel responses for each receive path are provided to an STC decoder 100, which provides STC decoding on both received paths to recover the transmitted symbols. The channel reconstruction information provides equalization information to the STC decoder 100 sufficient to remove the effects of the transmission channel when processing the respective frequency domain symbols

The recovered symbols are placed back in order using symbol de-interleaver logic 102, which corresponds to the symbol interleaver logic 58 of the transmitter. The de-interleaved symbols are then demodulated or de-mapped to a corresponding bitstream using de-mapping logic 104. The bits are then de-interleaved using bit de-interleaver logic 106, which corresponds to the bit interleaver logic 54 of the transmitter architecture. The de-interleaved bits are then processed by rate de-matching logic 108 and presented to channel decoder logic 110 to recover the initially scrambled data and the CRC checksum. Accordingly, CRC logic 112 removes the CRC checksum, checks the scrambled data in traditional fashion, and provides it to the de-scrambling logic 114 for de-scrambling using the known base station de-scrambling code to recover the originally transmitted data 116.

Copy provided by USPTO from the IFW Image Database on 05/12/2005

In parallel to recovering the data 116, a CQI, or at least information sufficient to create a CQI at the base station 14, is determined and transmitted to the base station 14. As noted above, the CQI in a preferred embodiment is a function of the carrier-to-interference ratio (CIR), as well as the degree to which the channel response varies across the various sub-carriers in the OFDM frequency band. For this embodiment, the channel gain for each sub-carrier in the OFDM frequency band being used to transmit information are compared relative to one another to determine the degree to which the channel gain varies across the OFDM frequency band. Although numerous techniques are available to measure the degree of variation, one technique is to calculate the standard deviation of the channel gain for each sub-carrier throughout the OFDM frequency band being used to transmit data.

Copy provided by USPTO from the IFW Image Database on 05/12/2005

WE CLAIM:

1. A method comprising:
   - at a terminal, receiving a short data burst from a basestation
   - wherein said terminal is in either sleep mode or idle mode

2. A method comprising:
   - at a basestation, receiving a short data burst from a terminal
   - wherein said terminal is in either sleep mode or idle mode

Copy provided by USPTO from the IFW Image Database on 05/12/2005

Figure 1

HT=1	EC=0	Type (3) = 100	BR (8)
BR (8)			Connection CID MSB (8)
Connection CID LSB (8)			HCS (8)

Copy provided by USPTO from the IFW Image Database on 05/12/2005

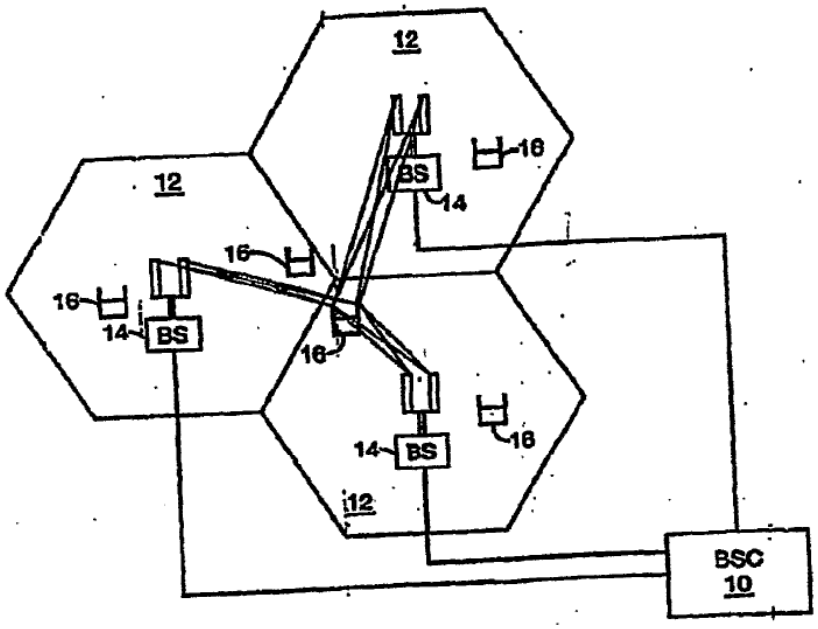

Figure 2

Copy provided by USPTO from the IFW Image Database on 05/12/2005

Copy provided by USPTO from the IFW Image Database on 05/12/2005

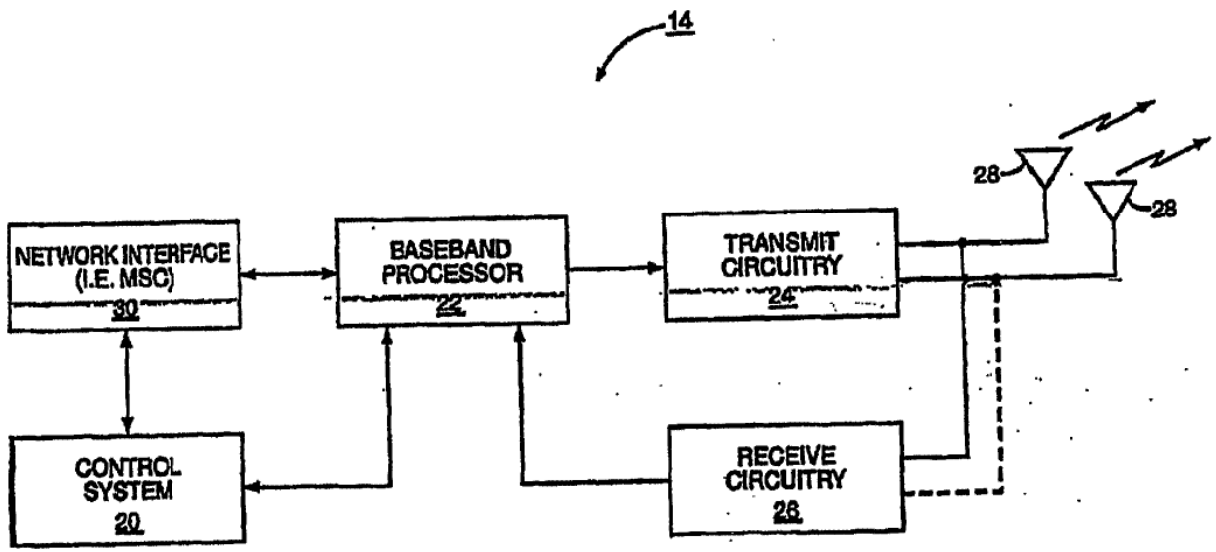

Figure 3

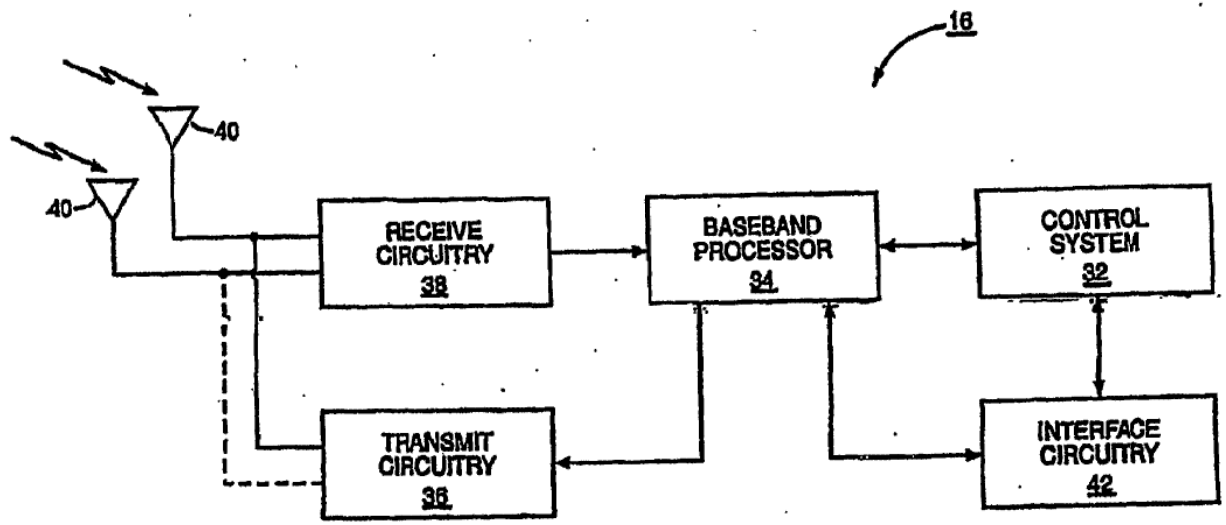

Figure 4

Copy provided by USPTO from the IFW Image Database on 05/12/2005

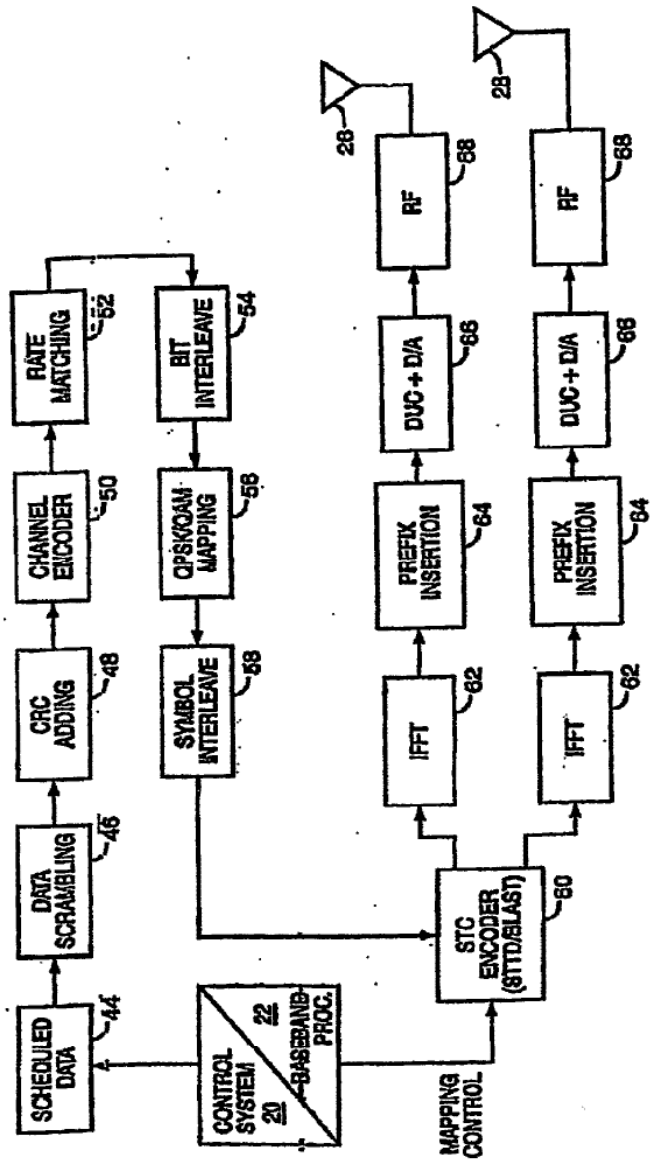

Figure 5

Copy provided by USPTO from the IFW Image Database on 05/12/2005

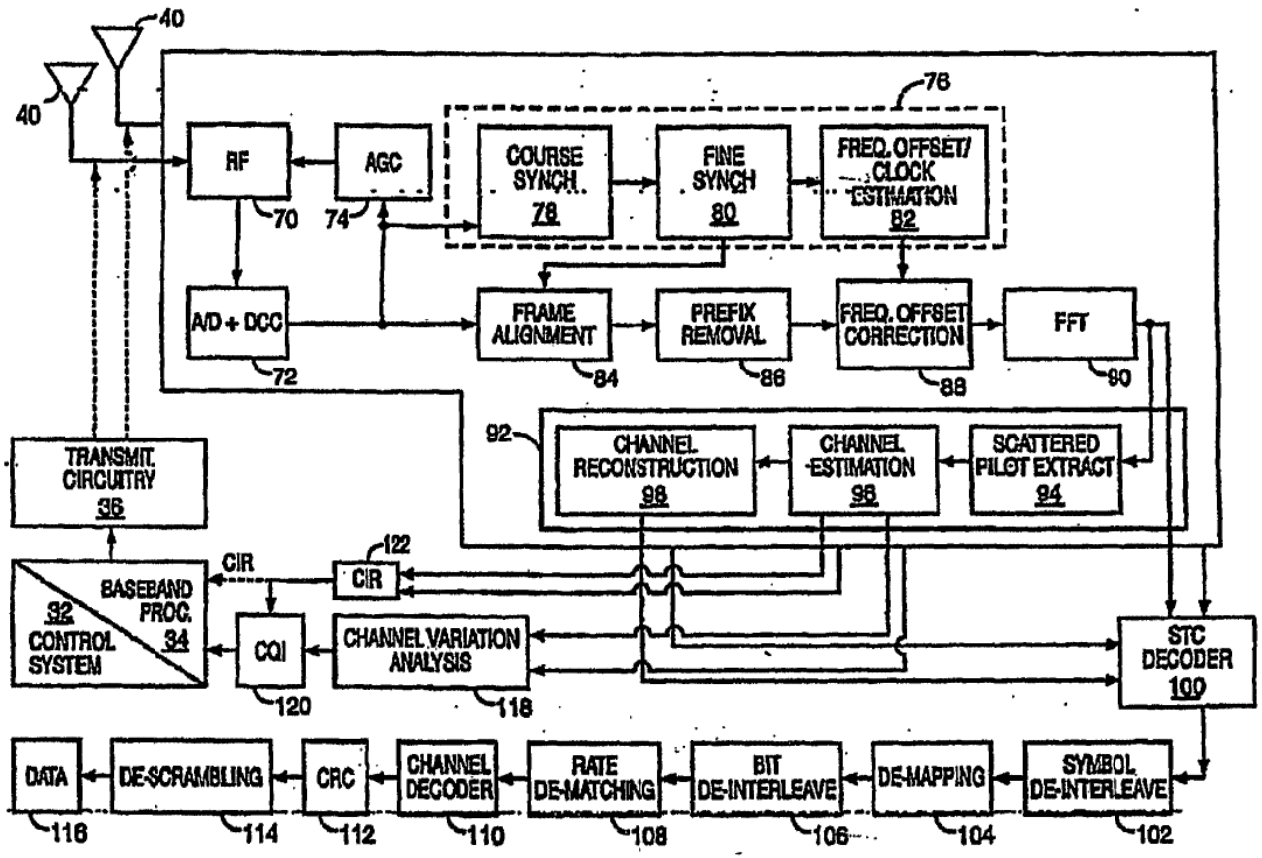

Figure 6

Copy provided by USPTO from the IFW Image Database on 05/12/2005

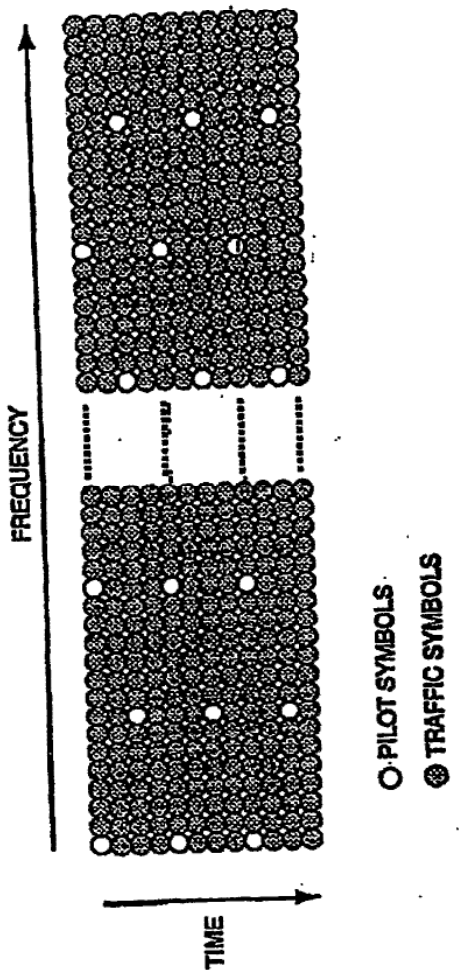

Figure 7

Copy provided by USPTO from the IFW Image Database on 05/12/2005

UPLINK CHANNEL SYSTEMS AND METHODS

Field of the Invention

This invention generally relates to the field of wireless communications. More specifically to uplink space time coded fast feedback and acknowledgement channels for broadband mobile wireless metropolitan area networks including networks operating according to the IEEE 802.16(e) standard.

Background of the Invention

For uplink transmission, when MIMO is employed, i.e. multiple transmit antennas are used at terminal, the feedback channel can be extended into MIMO or space time coded transmission to achieve better performances, namely (1) reduce the transmit power for the terminal i.e. to save the battery (2) to increase the amount of the feedback information to the network. This invention presents a solution for the extension of the current IEEE802.16e uplink fast feedback channels such as (1) Channel Quality Indicator (CQI) (2) the HARQ acknowledgment (ACK) channel.

Summary of the Invention

Fast Feedback

It is an object of the invention to provide fast feedback channel system and method for broadband mobile wireless metropolitan area networks.

It is an object of the invention to provide fast feedback channel system and method wherein slots may be individually allocated to MSS (mobile subscriber stations) for transmission of physical layer related information that requires fast response from the MSS.

It is another object of the invention to provide a fast feedback channel system and method wherein allocations are done in a number of ways including in a unicast manner or:

1. through the FAST_FEEDBACK MAC sub-header, or
2. through the CQICH_Control IE(), or
3. through the CQICH_Alloc_IE() or
4. through the CQICH_Enhanced_Alloc_IE(),

It is another object of the invention to provide fast feedback channel system and method wherein the transmission may take place in a specific UL region designated by UIUC = 0. Each enhanced fast-feedback slot includes at least 1 OFDMA slot mapped in a manner similar to the mapping of normal uplink data.

It is another object of the invention to provide fast feedback channel system and method wherein said slots uses QPSK modulation on the 48 data sub-carriers it may include, and may carry a data payload of 4 bits, 5 bits or 6 bits (processing gain 48/6=8=12dB) the mapping

Copy provided by USPTO from the IFW Image Database on 05/12/2005

between the payload bit sequences and the sub-carriers modulation for 4 bits, 5 bits and 6 bit payload, respectively.

ACK Channel

It is an object of the invention to provide an uplink ACK (Acknowledgement) that provides feedback for Downlink Hybrid ARQ.

According to one embodiment this channel is only supported by MSSs supporting H-ARQ. The MSS transmits ACK or NAK feedback for Downlink packet data.

Space Time Coding and Extensions to more than Two Antennas

It is an object of the invention to utilize trellis space-time coding for the fast feedback and ACK channels set out in the summary of the invention

Brief Description of the Drawings

Figure 1 provides an allocation of a FAST_FEEDBACK channel in accordance with an embodiment of the invention.

Figure 2 provides Sub-carrier Mapping of FAST_FEEDBACK Modulation Symbols for Partial Utilized Sub-Channel (PUSC) in accordance with an embodiment of the invention.

Figure 3 provides Sub-carrier Mapping of FAST_FEEDBACK Modulation Symbols for Optional PUSC in accordance with an embodiment of the invention.

Figure 4 provides an Option-1 Space-Time Trellis Code in accordance with an embodiment of the invention

Figure 5 provides an Option-1 Space-Time Trellis Code in accordance with an embodiment of the invention

Figure 6 is a block representation of a cellular communication system.

Figure 7 is a block representation of a base station according to one embodiment of the present invention.

Figure 8 is a block representation of a mobile terminal according to one embodiment of the present invention.

Figure 9 is a logical breakdown of an OFDM transmitter architecture according to one embodiment of the present invention.

Copy provided by USPTO from the IFW Image Database on 05/12/2005

Figure 10 is a logical breakdown of an OFDM receiver architecture according to one embodiment of the present invention.

Figure 11 illustrates a pattern of sub-carriers for carrying pilot symbols in an OFDM environment.

Detailed Description of Embodiments of the Invention

The following modification is based on IEEE standard p802.16e/D5 which is hereby incorporated by reference.

Fast Feedback

Table 1 sets out a Fast_Feedback channel sub-carrier modulation in accordance with an embodiment of the invention.

Table 1 FAST_FEEDBACK channel sub-carrier modulation with 4 bit

4 bit payload	Fast Feedback vector indices per Tile Tile(0), Tile(1), ... ,Tile(5)
0b0000	0,0,0,0,0,0
0b0001	1,1,1,1,1,1
0b0010	2,2,2,2,2,2
0b0011	3,3,3,3,3,3
0b0100	4,4,4,4,4,4
0b0101	5,5,5,5,5,5
0b0110	6,6,6,6,6,6
0b0111	7,7,7,7,7,7
0b0000	0,1,2,3,4,5
0b0001	1,2,3,4,5,6
0b0010	2,3,4,5,6,7
0b0011	3,4,5,6,7,0
0b0100	4,5,6,7,0,1
0b0101	5,6,7,0,1,2
0b0110	6,7,0,1,2,3
0b0111	7,0,1,2,3,4

Table 2 sets out a Fast_Feedback channel sub-carrier modulation in accordance with an embodiment of the invention.

Table 2 FAST_FEEDBACK channel sub-carrier modulation with 5 bit

Copy provided by USPTO from the IFW Image Database on 05/12/2005

5 bit payload	Fast Feedback vector indices per Tile Tile(0), Tile(1), … ,Tile(5)
0b00000	0,0,0,0,0,0
0b00001	1,1,1,1,1,1
0b00010	2,2,2,2,2,2
0b00011	3,3,3,3,3,3
0b00100	4,4,4,4,4,4
0b00101	5,5,5,5,5,5
0b00110	6,6,6,6,6,6
0b00111	7,7,7,7,7,7
0b01000	0,1,2,3,4,5
0b01001	1,2,3,4,5,6
0b01010	2,3,4,5,6,7
0b01011	3,4,5,6,7,0
0b01100	4,5,6,7,0,1
0b01101	5,6,7,0,1,2
0b01110	6,7,0,1,2,3
0b01111	7,0,1,2,3,4
0b10000	4,7,2,5,1,6
0b10001	5,0,3,6,2,7
0b10010	6,1,4,7,3,0
0b10011	7,2,5,0,4,1
0b10100	0,3,6,1,5,2
0b10101	1,4,7,2,6,3
0b10110	2,5,0,3,7,4
0b10111	3,6,1,4,0,5
0b11000	4,6,0,2,5,7
0b11001	5,7,1,3,6,0
0b11010	6,0,2,4,7,1
0b11011	7,1,3,5,0,2
0b11100	0,2,4,6,1,3
0b11101	1,3,5,7,2,4
0b11110	2,4,6,0,3,5
0b11111	3,5,7,1,4,6

Table 3 sets out a Fast_Feedback channel sub-carrier modulation in accordance with an embodiment of the invention.

Table 3 FAST_FEEDBACK channel sub-carrier modulation with 6 bit

6 bit payload	Fast Feedback vector indices per Tile Tile(0), Tile(1), … ,Tile(5)

Copy provided by USPTO from the IFW Image Database on 05/12/2005

0b000000	0,0,0,0,0,0
0b000001	1,1,1,1,1,1
0b000010	2,2,2,2,2,2
0b000011	3,3,3,3,3,3
0b000100	4,4,4,4,4,4
0b000101	5,5,5,5,5,5
0b000110	6,6,6,6,6,6
0b000111	7,7,7,7,7,7
0b001000	2,4,3,6,7,5
0b001001	3,5,2,7,6,4
0b001010	0,6,1,4,5,7
0b001011	1,7,0,5,4,6
0b001100	6,0,7,2,3,1
0b001101	7,1,6,3,2,0
0b001110	4,2,5,0,1,3
0b001111	5,3,4,1,0,2
0b010000	4,3,6,7,5,1
0b010001	5,2,7,6,4,0
0b010010	6,1,4,5,7,3
0b010011	7,0,5,4,6,2
0b010100	0,7,2,3,1,5
0b010101	1,6,3,2,0,4
0b010110	2,5,0,1,3,7
0b010111	3,4,1,0,2,6
0b011000	3,6,7,5,1,2
0b011001	2,7,6,4,0,3
0b011010	1,4,5,7,3,0
0b011011	0,5,4,6,2,1
0b011100	7,2,3,1,5,6
0b011101	6,3,2,0,4,7
0b011110	5,0,1,3,7,4
0b011111	4,1,0,2,6,5
0b100000	6,7,5,1,2,4
0b100001	7,6,4,0,3,5
0b100010	4,5,7,3,0,6
0b100011	5,4,6,2,1,7
0b100100	2,3,1,5,6,0
0b100101	3,2,0,4,7,1
0b100110	0,1,3,7,4,2
0b100111	1,0,2,6,5,3
0b101000	7,5,1,2,4,3
0b101001	6,4,0,3,5,2
0b101010	5,7,3,0,6,1
0b101011	4,6,2,1,7,0
0b101100	3,1,5,6,0,7

Copy provided by USPTO from the IFW Image Database on 05/10/2005

0b101101	2,0,4,7,1,6
0b101110	1,3,7,4,2,5
0b101111	0,2,6,5,3,4
0b110000	5,1,2,4,3,6
0b110001	4,0,3,5,2,7
0b110010	7,3,0,6,1,4
0b110011	6,2,1,7,0,5
0b110100	1,5,6,0,7,2
0b110101	0,4,7,1,6,3
0b110110	3,7,4,2,5,0
0b110111	2,6,5,3,4,1
0b111000	1,2,4,3,6,7
0b111001	0,3,5,2,7,6
0b111010	3,0,6,1,4,5
0b111011	2,1,7,0,5,4
0b111100	5,6,0,7,2,3
0b111101	4,7,1,6,3,2
0b111110	7,4,2,5,0,1
0b111111	6,5,3,4,1,0

In accordance with an embodiment of the invention, a FAST_FEEDBACK channel may be orthogonally modulated with QPSK symbols. For example, Let $M_{n,8m+k}$ $(0 \le k \le 7)$ be the modulation symbol index of the k-th modulation symbol in the m-th uplink tile of the n-th FAST_FEEDBACK channel. The possible modulation patterns composed of $M_{n,8m}$, $M_{n,8m+1}$, ... , $M_{n,8m+7}$ in the m-th tile of the n-th FAST_FEEDBACK channel include those defined in Table 4.

Table 4 —Orthogonal Modulation Index in FAST_FEEDBACK Channel

Vector index	Antenna-0	Antenna-1
	$M_{n,8m}$, $M_{n,8m+1}$ + , ··· $M_{n,8m+7}$	$M_{n,8m}$, $M_{n,8m+1}$ + , ··· $M_{n,8m+7}$
0	P0, P1, P2, P3, P0, P1, P2, P3	Conj{-P1,P0,-P3,P2,-P1,P0,-P3,P2}
1	P0, P3, P2, P1, P0, P3, P2, P1	Conj{-P3,P0,-P1,P2,-P3,P0,- P1,P2}
2	P0, P0, P1, P1, P2, P2, P3, P3	Conj{-P0,P0,-P1,P1,-P2,P2,- P3,P3}
3	P0, P0, P3, P3, P2, P2, P1, P1	Conj{-P0,P0,-P3,P3,-P2,P2,- P1,P1}
4	P0, P0, P0, P0, P0, P0, P0, P0	Conj{-P0,P0,-P0,P0,-P0,P0,- P0,P0}
5	P0, P2, P0, P2, P0, P2, P0, P2	Conj{-P2,P0,-P2,P0,-P2,P0,- P2,P0}
6	P0, P2, P0, P2, P2, P0, P2, P0	Conj{-P2,P0,-P2,P0,-P0,P2,- P0,P2}
7	P0, P2, P2, P0, P2, P0, P0, P2	Conj{-P2,P0,-P0,P2,-P0,P2,- P2,P0}

Where

$$P0 = \exp(j \cdot \frac{\pi}{4}),\ P1 = \exp(j \cdot \frac{3\pi}{4}),\ P2 = \exp(-j \cdot \frac{3\pi}{4}),\ P3 = \exp(-j \cdot \frac{\pi}{4}).$$

Copy provided by USPTO from the IFW Image Database on 05/12/2005

$M_{n,8m+k}$ is mapped to FAST_FEEDBACK channel tile as shown in Figure 2 for PUSC uplink sub-channel and in Figure 3 for optional PUSC uplink sub-channel. A FAST_FEEDBACK channel is mapped to one sub-channel composed of 6 tiles (PUSC) or 3 tiles (optional PUSC)

ACK Channel

According to an embodiment of the invention one ACK channel occupies a half sub-channel, which may be 3 pieces of a 3x3 uplink tile in the case of optional PUSC or 3 pieces of a 4x3 uplink tile in the case of PUSC. According to one embodiment of the invention the acknowledgement bit of the n-th ACK channel is '0' (ACK) if the corresponding downlink packet has been successfully received; otherwise, it is '1' (NAK). This 1 bit may be encoded into a length 3 codeword over an 8-ary alphabet for error protection as shown in Table 5.

Table 5 sets out an ACK channel sub-carrier modulation in accordance with an embodiment of the invention.

Table 5 ACK channel sub-carrier modulation

ACK 1-bit symbol	Vector Indices per Tile {Tile(0), Tile(1), Tile(2)}
0	0, 0, 0
1	4, 7, 2

In accordance with an embodiment of the invention the UL ACK channel is orthogonally modulated with QPSK symbols. For example, Let be the modulation symbol index of the *k*th modulation symbol in the *m*th uplink tile of the *n*th UL ACK channel. The possible modulation patterns composed of in the *m*th tile of the *n*th UL ACK channel include those shown in Table 6.

Table 6 provides an Orthogonal modulation index in an UL ACK Channel in accordance with an embodiment of the invention.

Table 6 Orthogonal Modulation Index in UL ACK Channel

Vector index	Antenna-0	Antenna-1
	$M_{n,8m}$, $M_{n,8m+1}$ + , ⋯ $M_{n,8m+7}$	$M_{n,8m}$, $M_{n,8m+1}$ + , ⋯ $M_{n,8m+7}$
0	P0, P1, P2, P3, P0, P1, P2, P3	Conj{-P1,P0,-P3,P2,-P1,P0,-P3,P2 }
1	P0, P3, P2, P1, P0, P3, P2, P1	Conj{-P3,P0,-P1,P2,-P3,P0,-P1,P2 }
2	P0, P0, P1, P1, P2, P2, P3, P3	Conj{-P0,P0,-P1,P1,-P2, P2,-P3,P3 }
3	P0, P0, P3, P3, P2, P2, P1, P1	Conj{-P0,P0,-P3,P3,-P2,P2,-P1,P1}
4	P0, P0, P0, P0, P0, P0, P0, P0	Conj{-P0,P0,-P0,P0,-P0,P0,-P0,P0 }
5	P0, P2, P0, P2, P0, P2, P0, P2	Conj{-P2,P0,-P2,P0,-P2,P0,-P2,-P0}
6	P0, P2, P0, P2, P2, P0, P2, P0	Conj{-P2,P0,-P2,P0,-P0,P2,-P0,P2 }
7	P0, P2, P2, P0, P2, P0, P0, P2	Conj{-P2,P0,-P0,P2,-P0,P2,-P2,P0 }

Where:

Copy provided by USPTO from the IFW Image Database on 05/12/2005

$P0 = \exp(j \cdot \frac{\pi}{4})$, $P1 = \exp(j \cdot \frac{3\pi}{4})$, $P2 = \exp(-j \cdot \frac{3\pi}{4})$, $P3 = \exp(-j \cdot \frac{\pi}{4})$.

$M_{n,8m+k}$ may be mapped to an UL ACK channel tile as shown in Figure 1 for a PUSC uplink sub-channel and in Table 6 for an optional PUSC uplink sub-channel. An UL ACK channel may be mapped to half sub-channel composed of 3 tiles (PSUC) or 1.5 tiles (optional PUSC)

In accordance with an embodiment of the invention trellis space-time coding is shown for a fast feedback and ACK channel in Figures 4 and 5.

Space Time Coding and Extensions to more than Two Antennas

The extension to 3 and 4 transmit antennas can including the following:

For example, let the complex symbols to be transmitted be x1, x2, x3, x4 which take values from a square QAM constellation. Let $s_i = x_i e^{j\theta}$ for i=1,2,...,5, where $\theta = 66^o$ for QPSK, and let $\tilde{s}_1 = s_{1I} + js_{3Q}$; $\tilde{s}_2 = s_{2I} + js_{4Q}$; $\tilde{s}_3 = s_{3I} + js_{1Q}$; $\tilde{s}_4 = s_{4I} + js_{2Q}$; $\tilde{s}_5 = s_{5I} + js_{7Q}$ where $s_i = s_{iI} + js_{iQ}$. The Space-Time-Frequency code (over two OFDMA symbols and two sub-carriers) for 3 transmit antenna configuration with diversity order 3 may include

$$A = \begin{bmatrix} \tilde{s}_1 & -\tilde{s}_2^* & 0 & 0 \\ \tilde{s}_2 & \tilde{s}_1^* & \tilde{s}_3 & -\tilde{s}_4^* \\ 0 & 0 & \tilde{s}_4 & \tilde{s}_s^* \end{bmatrix}$$

The Space-Time-Frequency code (over two OFDMA symbols and two sub-carriers) for 4 transmit antenna configuration with diversity order 4 may include

$$A = \begin{bmatrix} \tilde{s}_1 & \tilde{s}_2 & 0 & 0 \\ -\tilde{s}_2^* & \tilde{s}_1^* & 0 & 0 \\ 0 & 0 & \tilde{s}_3 & \tilde{s}_4 \\ 0 & 0 & -\tilde{s}_4^* & \tilde{s}_3^* \end{bmatrix}$$

With reference to Figure 6, a base station controller (BSC) 10 controls wireless communications within multiple cells 12, which are served by corresponding base stations (BS) 14. In general, each base station 14 facilitates communications using OFDM with mobile terminals 16, which are within the cell 12 associated with the corresponding base station 14. The movement of the mobile terminals 16 in relation to the base stations 14 results in significant fluctuation in channel conditions. As illustrated, the base stations 14 and mobile terminals 16 may include multiple antennas to provide spatial diversity for communications.

Copy provided by USPTO from the IFW Image Database on 05/12/2005

A high level overview of the mobile terminals 16 and base stations 14 of the present invention is provided prior to delving into the structural and functional details of the preferred embodiments. With reference to Figure 7, a base station 14 configured according to one embodiment of the present invention is illustrated. The base station 14 generally includes a control system 20, a baseband processor 22, transmit circuitry 24, receive circuitry 26, multiple antennas 28, and a network interface 30. The receive circuitry 26 receives radio frequency signals bearing information from one or more remote transmitters provided by mobile terminals 16 (illustrated in Figure 8). Preferably, a low noise amplifier and a filter (not shown) cooperate to amplify and remove broadband interference from the signal for processing. Downconversion and digitization circuitry (not shown) will then downconvert the filtered, received signal to an intermediate or baseband frequency signal, which is then digitized into one or more digital streams.

The baseband processor 22 processes the digitized received signal to extract the information or data bits conveyed in the received signal. This processing typically comprises demodulation, decoding, and error correction operations. As such, the baseband processor 22 is generally implemented in one or more digital signal processors (DSPs) or application-specific integrated circuits (ASICs). The received information is then sent across a wireless network via the network interface 30 or transmitted to another mobile terminal 16 serviced by the base station 14.

On the transmit side, the baseband processor 22 receives digitized data, which may represent voice, data, or control information, from the network interface 30 under the control of control system 20, and encodes the data for transmission. The encoded data is output to the transmit circuitry 24, where it is modulated by a carrier signal having a desired transmit frequency or frequencies. A power amplifier (not shown) will amplify the modulated carrier signal to a level appropriate for transmission, and deliver the modulated carrier signal to the antennas 28 through a matching network (not shown). Modulation and processing details are described in greater detail below.

Copy provided by USPTO from the IFW Image Database on 05/12/2005

With reference to Figure 8, a mobile terminal 16 configured according to one embodiment of the present invention is illustrated. Similarly to the base station 14, the mobile terminal 16 will include a control system 32, a baseband processor 34, transmit circuitry 36, receive circuitry 38, multiple antennas 40, and user interface circuitry 42. The receive circuitry 38 receives radio frequency signals bearing information from one or more base stations 14. Preferably, a low noise amplifier and a filter (not shown) cooperate to amplify and remove broadband interference from the signal for processing. Downconversion and digitization circuitry (not shown) will then downconvert the filtered, received signal to an intermediate or baseband frequency signal, which is then digitized into one or more digital streams.

The baseband processor 34 processes the digitized received signal to extract the information or data bits conveyed in the received signal. This processing typically comprises demodulation, decoding, and error correction operations, as will be discussed on greater detail below. The baseband processor 34 is generally implemented in one or more digital signal processors (DSPs) and application specific integrated circuits (ASICs).

For transmission, the baseband processor 34 receives digitized data, which may represent voice, data, or control information, from the control system 32, which it encodes for transmission. The encoded data is output to the transmit circuitry 36, where it is used by a modulator to modulate a carrier signal that is at a desired transmit frequency or frequencies. A power amplifier (not shown) will amplify the modulated carrier signal to a level appropriate for transmission, and deliver the modulated carrier signal to the antennas 40 through a matching network (not shown). Various modulation and processing techniques available to those skilled in the art are applicable to the present invention.

In OFDM modulation, the transmission band is divided into multiple, orthogonal carrier waves. Each carrier wave is modulated according to the digital data to be transmitted. Because OFDM divides the transmission band into multiple carriers, the bandwidth per carrier decreases and the modulation time per carrier increases. Since the multiple carriers are transmitted in parallel, the transmission rate for the digital data, or symbols, on any given carrier is lower than when a single carrier is used.

Copy provided by USPTO from the IFW Image Database on 05/12/2005

OFDM modulation requires the performance of an Inverse Fast Fourier Transform (IFFT) on the information to be transmitted. For demodulation, the performance of a Fast Fourier Transform (FFT) on the received signal is required to recover the transmitted information. In practice, the IFFT and FFT are provided by digital signal processing carrying out an Inverse Discrete Fourier Transform (IDFT) and Discrete Fourier Transform (DFT), respectively. Accordingly, the characterizing feature of OFDM modulation is that orthogonal carrier waves are generated for multiple bands within a transmission channel. The modulated signals are digital signals having a relatively low transmission rate and capable of staying within their respective bands. The individual carrier waves are not modulated directly by the digital signals. Instead, all carrier waves are modulated at once by IFFT processing.

In the preferred embodiment, OFDM is used for at least the downlink transmission from the base stations 14 to the mobile terminals 16. Each base station 14 is equipped with n transmit antennas 28, and each mobile terminal 16 is equipped with m receive antennas 40. Notably, the respective antennas can be used for reception and transmission using appropriate duplexers or switches and are so labeled only for clarity.

With reference to Figure 9, a logical OFDM transmission architecture is provided according to one embodiment. Initially, the base station controller 10 will send data to be transmitted to various mobile terminals 16 to the base station 14. The base station 14 may use the CQIs associated with the mobile terminals to schedule the data for transmission as well as select appropriate coding and modulation for transmitting the scheduled data. The CQIs may be directly from the mobile terminals 16 or determined at the base station 14 based on information provided by the mobile terminals 16. In either case, the CQI for each mobile terminal 16 is a function of the degree to which the channel amplitude (or response) varies across the OFDM frequency band.

The scheduled data 44, which is a stream of bits, is scrambled in a manner reducing the peak-to-average power ratio associated with the data using data scrambling logic 46. A cyclic redundancy check (CRC) for the scrambled data is determined and appended to the scrambled

Copy provided by USPTO from the IFW Image Database on 05/12/2005

data using CRC adding logic 48. Next, channel coding is performed using channel encoder logic 50 to effectively add redundancy to the data to facilitate recovery and error correction at the mobile terminal 16. Again, the channel coding for a particular mobile terminal 16 is based on the CQI. The channel encoder logic 50 uses known Turbo encoding techniques in one embodiment. The encoded data is then processed by rate matching logic 52 to compensate for the data expansion associated with encoding.

Bit interleaver logic 54 systematically reorders the bits in the encoded data to minimize the loss of consecutive data bits. The resultant data bits are systematically mapped into corresponding symbols depending on the chosen baseband modulation by mapping logic 56. Preferably, Quadrature Amplitude Modulation (QAM) or Quadrature Phase Shift Key (QPSK) modulation is used. The degree of modulation is preferably chosen based on the CQI for the particular mobile terminal. The symbols may be systematically reordered to further bolster the immunity of the transmitted signal to periodic data loss caused by frequency selective fading using symbol interleaver logic 58.

At this point, groups of bits have been mapped into symbols representing locations in an amplitude and phase constellation. When spatial diversity is desired, blocks of symbols are then processed by space-time block code (STC) encoder logic 60, which modifies the symbols in a fashion making the transmitted signals more resistant to interference and more readily decoded at a mobile terminal 16. The STC encoder logic 60 will process the incoming symbols and provide n outputs corresponding to the number of transmit antennas 28 for the base station 14. The control system 20 and/or baseband processor 22 will provide a mapping control signal to control STC encoding. At this point, assume the symbols for the n outputs are representative of the data to be transmitted and capable of being recovered by the mobile terminal 16. See A.F. Naguib, N. Seshadri, and A.R. Calderbank, "Applications of space-time codes and interference suppression for high capacity and high data rate wireless systems," Thirty-Second Asilomar Conference on Signals, Systems & Computers, Volume 2, pp. 1803-1810, 1998, which is incorporated herein by reference in its entirety.

Copy provided by USPTO from the IFW Image Database on 05/12/2005

For the present example, assume the base station 14 has two antennas 28 (n=2) and the STC encoder logic 60 provides two output streams of symbols. Accordingly, each of the symbol streams output by the STC encoder logic 60 is sent to a corresponding IFFT processor 62, illustrated separately for ease of understanding. Those skilled in the art will recognize that one or more processors may be used to provide such digital signal processing, alone or in combination with other processing described herein. The IFFT processors 62 will preferably operate on the respective symbols to provide an inverse Fourier Transform. The output of the IFFT processors 62 provides symbols in the time domain. The time domain symbols are grouped into frames, which are associated with a prefix by like insertion logic 64. Each of the resultant signals is up-converted in the digital domain to an intermediate frequency and converted to an analog signal via the corresponding digital up-conversion (DUC) and digital-to-analog (D/A) conversion circuitry 66. The resultant (analog) signals are then simultaneously modulated at the desired RF frequency, amplified, and transmitted via the RF circuitry 68 and antennas 28. Notably, pilot signals known by the intended mobile terminal 16 are scattered among the sub-carriers. The mobile terminal 16, which is discussed in detail below, will use the pilot signals for channel estimation.

Reference is now made to Figure 10 to illustrate reception of the transmitted signals by a mobile terminal 16. Upon arrival of the transmitted signals at each of the antennas 40 of the mobile terminal 16, the respective signals are demodulated and amplified by corresponding RF circuitry 70. For the sake of conciseness and clarity, only one of the two receive paths is described and illustrated in detail. Analog-to-digital (A/D) converter and down-conversion circuitry 72 digitizes and downconverts the analog signal for digital processing. The resultant digitized signal may be used by automatic gain control circuitry (AGC) 74 to control the gain of the amplifiers in the RF circuitry 70 based on the received signal level.

Initially, the digitized signal is provided to synchronization logic 76, which includes coarse synchronization logic 78, which buffers several OFDM symbols and calculates an auto-correlation between the two successive OFDM symbols. A resultant time index corresponding to the maximum of the correlation result determines a fine synchronization search window, which is used by fine synchronization logic 80 to determine a precise framing

Copy provided by USPTO from the IFW Image Database on 05/12/2005

starting position based on the headers. The output of the fine synchronization logic 80 facilitates frame acquisition by frame alignment logic 84. Proper framing alignment is important so that subsequent FFT processing provides an accurate conversion from the time to the frequency domain. The fine synchronization algorithm is based on the correlation between the received pilot signals carried by the headers and a local copy of the known pilot data. Once frame alignment acquisition occurs, the prefix of the OFDM symbol is removed with prefix removal logic 86 and resultant samples are sent to frequency offset correction logic 88, which compensates for the system frequency offset caused by the unmatched local oscillators in the transmitter and the receiver. Preferably, the synchronization logic 76 includes frequency offset and clock estimation logic 82, which is based on the headers to help estimate such effects on the transmitted signal and provide those estimations to the correction logic 88 to properly process OFDM symbols.

At this point, the OFDM symbols in the time domain are ready for conversion to the frequency domain using FFT processing logic 90. The results are frequency domain symbols, which are sent to processing logic 92. The processing logic 92 extracts the scattered pilot signal using scattered pilot extraction logic 94, determines a channel estimate based on the extracted pilot signal using channel estimation logic 96, and provides channel responses for all sub-carriers using channel reconstruction logic 98. In order to determine a channel response for each of the sub-carriers, the pilot signal is essentially multiple pilot symbols that are scattered among the data symbols throughout the OFDM sub-carriers in a known pattern in both time and frequency. Figure 11 illustrates an exemplary scattering of pilot symbols among available sub-carriers over a given time and frequency plot in an OFDM environment. Continuing with Figure 10, the processing logic compares the received pilot symbols with the pilot symbols that are expected in certain sub-carriers at certain times to determine a channel response for the sub-carriers in which pilot symbols were transmitted. The results are interpolated to estimate a channel response for most, if not all, of the remaining sub-carriers for which pilot symbols were not provided. The actual and interpolated channel responses are used to estimate an overall channel response, which includes the channel responses for most, if not all, of the sub-carriers in the OFDM channel.

Copy provided by USPTO from the IFW Image Database on 05/12/2005

The frequency domain symbols and channel reconstruction information, which are derived from the channel responses for each receive path are provided to an STC decoder 100, which provides STC decoding on both received paths to recover the transmitted symbols. The channel reconstruction information provides equalization information to the STC decoder 100 sufficient to remove the effects of the transmission channel when processing the respective frequency domain symbols

The recovered symbols are placed back in order using symbol de-interleaver logic 102, which corresponds to the symbol interleaver logic 58 of the transmitter. The de-interleaved symbols are then demodulated or de-mapped to a corresponding bitstream using de-mapping logic 104. The bits are then de-interleaved using bit de-interleaver logic 106, which corresponds to the bit interleaver logic 54 of the transmitter architecture. The de-interleaved bits are then processed by rate de-matching logic 108 and presented to channel decoder logic 110 to recover the initially scrambled data and the CRC checksum. Accordingly, CRC logic 112 removes the CRC checksum, checks the scrambled data in traditional fashion, and provides it to the de-scrambling logic 114 for de-scrambling using the known base station de-scrambling code to recover the originally transmitted data 116.

In parallel to recovering the data 116, a CQI, or at least information sufficient to create a CQI at the base station 14, is determined and transmitted to the base station 14. As noted above, the CQI in a preferred embodiment is a function of the carrier-to-interference ratio (CIR), as well as the degree to which the channel response varies across the various sub-carriers in the OFDM frequency band. For this embodiment, the channel gain for each sub-carrier in the OFDM frequency band being used to transmit information are compared relative to one another to determine the degree to which the channel gain varies across the OFDM frequency band. Although numerous techniques are available to measure the degree of variation, one technique is to calculate the standard deviation of the channel gain for each sub-carrier throughout the OFDM frequency band being used to transmit data.

Copy provided by USPTO from the IFW Image Database on 05/12/2005

WE CLAIM:

1. A method comprising:
   - Provisioning a control signal for transmission to a basestation using space time coding of MIMO coding
   - Wherein said transmission is to occur via at least 2 antennas.

Copy provided by USPTO from the IFW Image Database on 05/12/2005

Figure 1

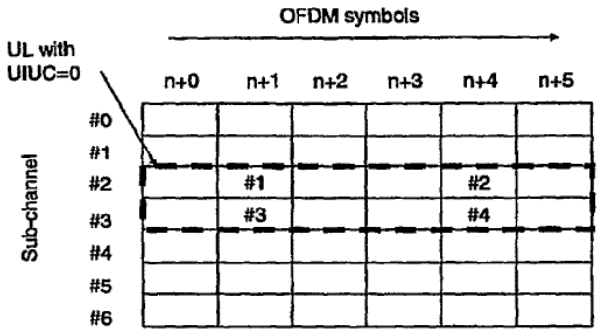

Figure 2

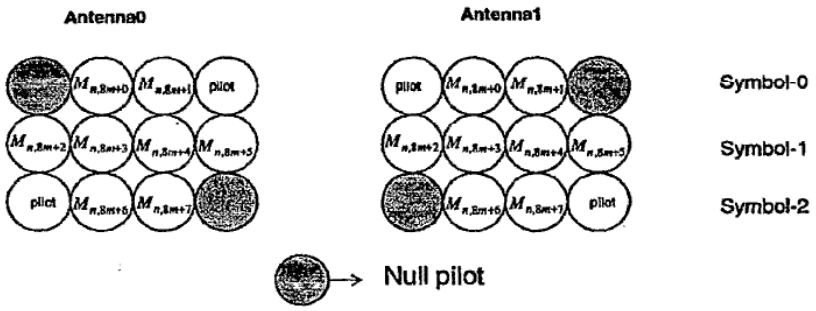

Figure 3

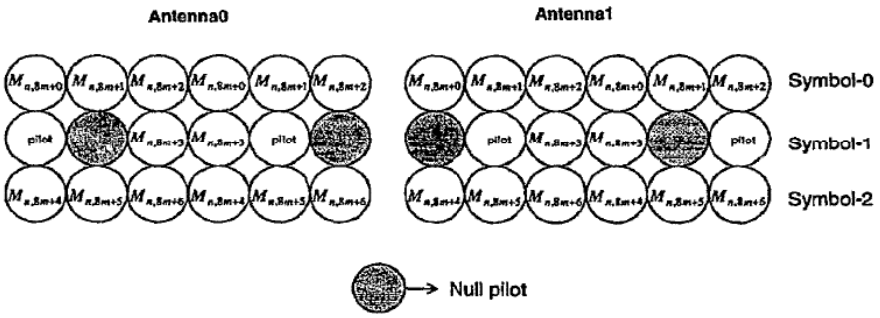

Copy provided by USPTO from the IFW Image Database on 05/12/2005

Figure 4

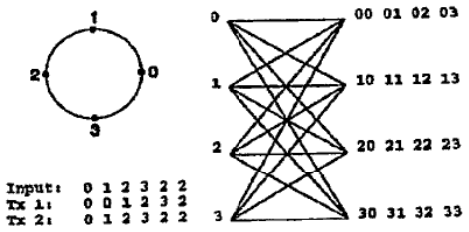

4-PSK 4-State Space-Time Code with 2 Tx Antennas

Figure 5

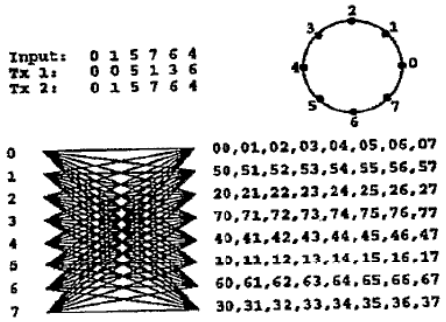

8-PSK 8-State Space-Time Code with 2 Tx Antennas

Copy provided by USPTO from the IFW Image Database on 05/12/2005

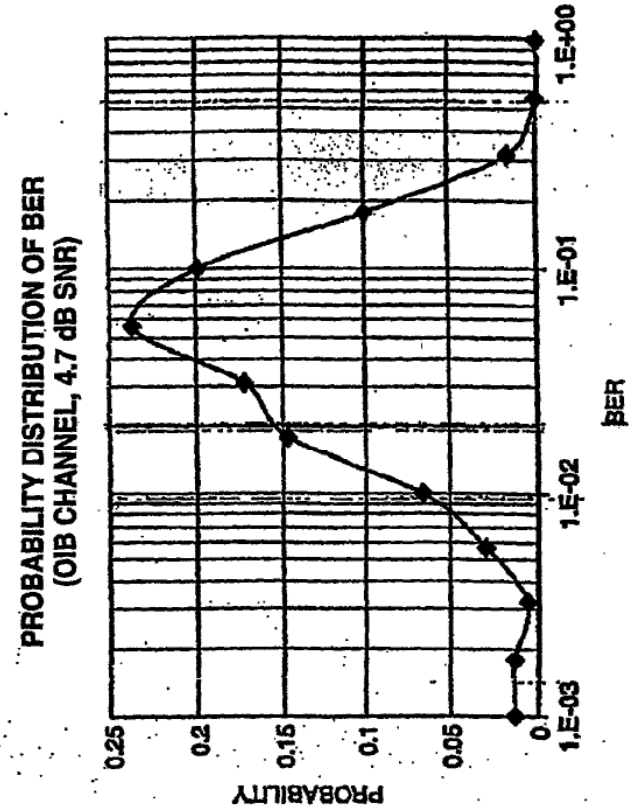

Figure 6

Copy provided by USPTO from the IFW Image Database on 05/12/2005

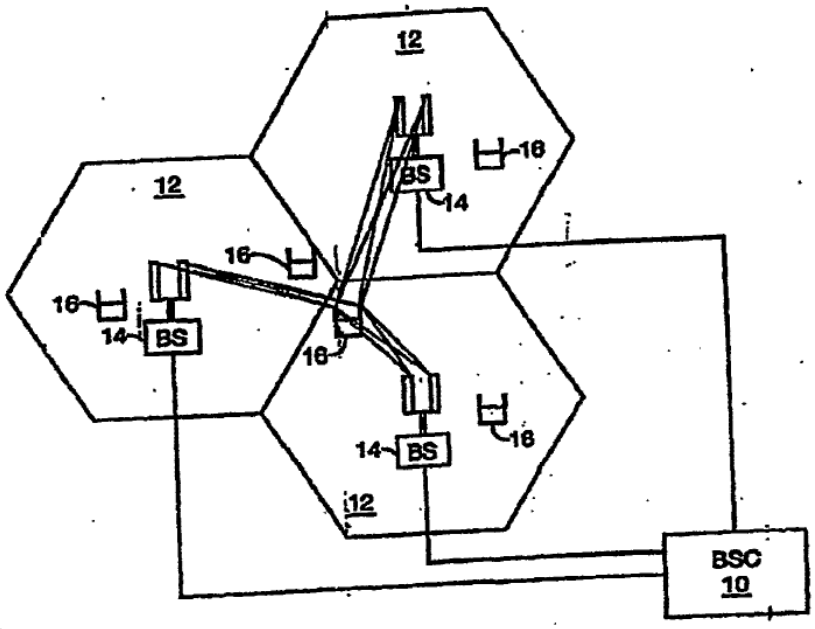

Figure 7

Copy provided by USPTO from the IFW Image Database on 05/12/2005

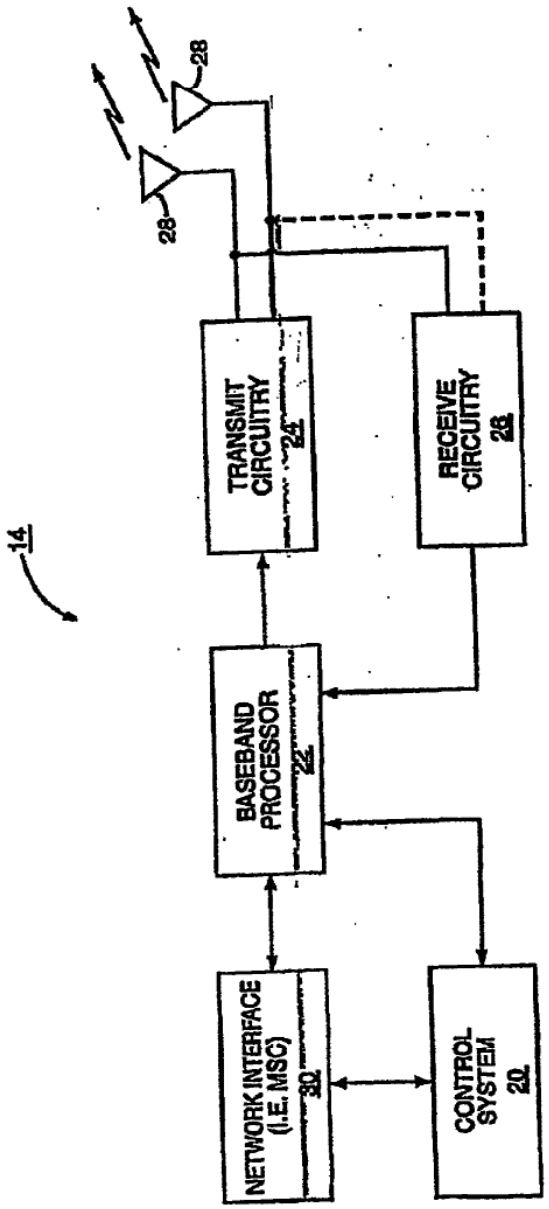

Figure 8

Copy provided by USPTO from the IFW Image Database on 05/12/2005

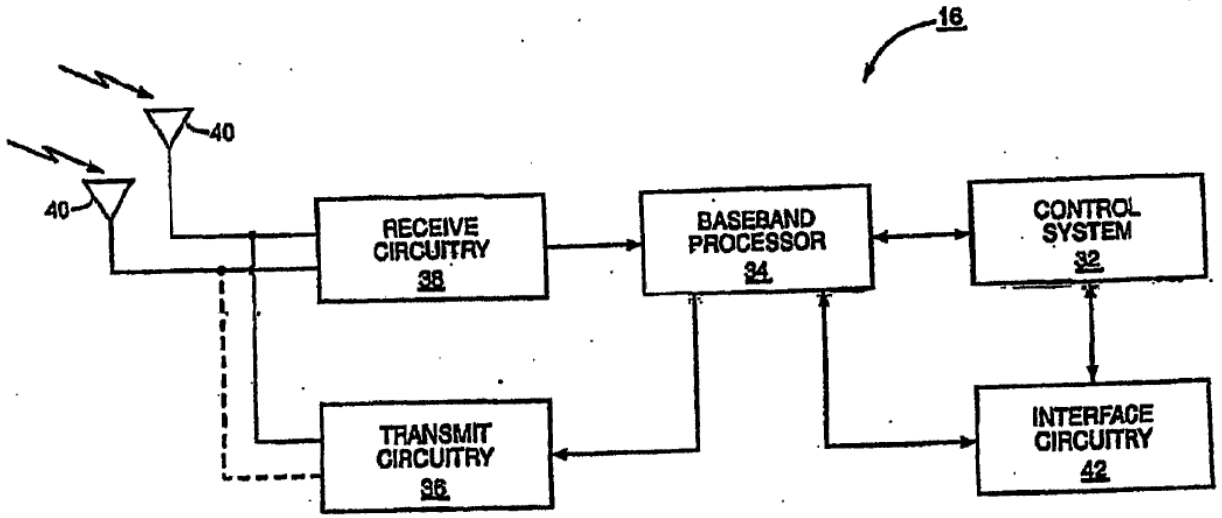

Figure 9

Copy provided by USPTO from the IFW Image Database on 05/12/2005

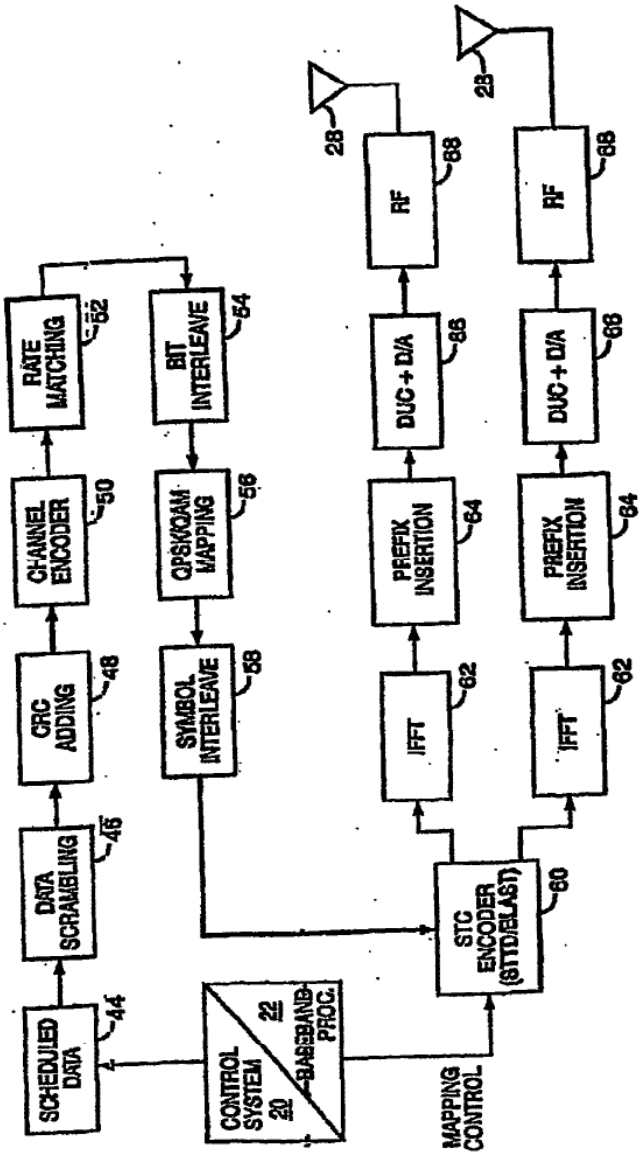

Figure 10

Copy provided by USPTO from the IFW Image Database on 05/12/2005

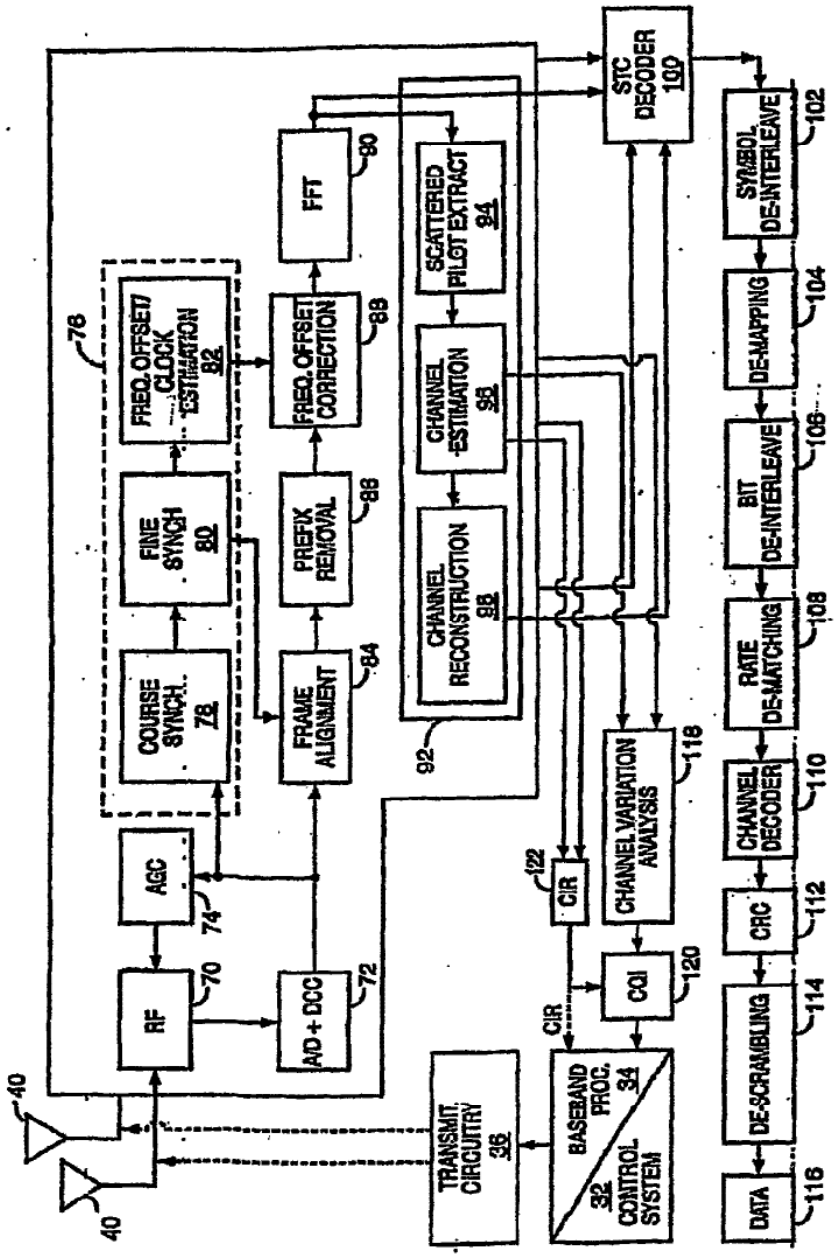

Figure 11

Copy provided by USPTO from the IFW Image Database on 05/12/2005

DOWNLINK RESOURCE ALLOCATION SYSTEM AND METHOD

Field of the Invention

This invention generally relates to the field of wireless communications. More specifically to downlink resource allocation systems and methods for broadband mobile wireless metropolitan area networks including networks operating according to the IEEE 802.16(e) standard.

Background of the Invention

In the current 802.16e draft standard (p802.16e/D5), downlink (DL) and uplink (UL) resource or data burst assignment is performed by layer 2 or MAC (medium access control) control messages called DL/UL-MAP messages.

In the DL-MAP message, each DL access region is described by a DL-MAP Information Element (IE) which includes OFDMA symbol offset (8 bits), Subchannel offset (6 bits), number of OFDMA symbols (8 bits) and number of subchannels (6 bits). By using such a mechanism, the minimum or basic DL resource unit is 1 subchannel (or mini-subchannel) x 1 OFMDA symbol. If assuming 20 MSSes are assigned DL resource per frame, 480 bits in DL-MAP will be used for region assignments. This results in large overhead.

A need exists therefore for an improved downlink resource allocation system and method

Summary of the Invention

It is an object of the invention to provide a downlink resource allocation system and method that reduces overhead.

It is an object of the invention to provide a downlink resource allocation system and method that includes a two-step method of resource assignment that reduces the overhead caused by the region description.

It is an object of the invention to provide a downlink resource allocation system and method that includes a two-step method of resource assignment wherein the first step includes Channel definition wherein:

- The DL resource used for users traffic may be divided into two types of channels (regions)
- A channel of type 1 includes a larger number basic resource units and an assigned channel ID (CHID)
    - This type of channel may be assigned to MSS who has a larger amount of DL traffic
    - Only one of this type of channel may be assigned to a MSS
- A channel of type 2 includes a basic resource unit (could be as small as 1 OFDMA symbol X 1 subchannel or 1 OFDMA symbol X 1 mini-subchannel or 1 bin in AMC permutation) and an assigned channel ID (CHID)
    - This type of channel may assigned to MSS who has a small amount of DL traffic
    - One or more of this type of channel may be assigned to a MSS

- A Channel Definition includes the resource division among channels, channel ID (CHID) assignment and number of bits of CHID (Num_bits of CHID). The channel definition is sent in DCD message and

Copy provided by USPTO from the IFW Image Database on 05/12/2005

such a channel definition may be updated slowly based on traffic statistics

It is another object of the invention to provide a downlink resource allocation system and method that includes a two-step method of resource assignment wherein the second step includes resource access description in MAP wherein:

- 1 bit is used to indicate a type of channel
- For type 1 channel, Num_bits_CHID bits are used to indicate channel ID (CHID)
- For type 2 channel, Num_bits_CHID bits are usd to indicate channel ID and 2 bits are used to indicate the number of channels

It is an object of the invention to provide a downlink resource allocation system and method wherein a DL access region description may be reduced to 7 bits (for type 1) from 28 bits and to 9 bits for type 2 if assuming a Num_bits_CHID of 6.

Copy provided by USPTO from the IFW Image Database on 05/12/2005

Brief Description of the Drawings

Figure 1 provides a channel definition and DL access IE in accordance with an embodiment of the invention.

Figure 2 provides a channel definition and DL access IE in accordance with an embodiment of the invention.

Figure 3 provides a resource assignment in accordance with an embodiment of the invention.

Figure 4 is a block representation of a cellular communication system.

Figure 5 is a block representation of a base station according to one embodiment of the present invention.

Figure 6 is a block representation of a mobile terminal according to one embodiment of the present invention.

Figure 7 is a logical breakdown of an OFDM transmitter architecture according to one embodiment of the present invention.

Figure 8 is a logical breakdown of an OFDM receiver architecture according to one embodiment of the present invention.

Figure 9 illustrates a pattern of sub-carriers for carrying pilot symbols in an OFDM environment.

Detailed Description of Embodiments of the Invention

The following modification is based on IEEE standard p802.16e/D5 which is hereby incorporated by reference.

Figure 1 set provides a channel definition and a DL access IE to enable the reduced overhead in accordance with an embodiment of the invention. As will be apparent to one of skill in the art a logical channel is shown.

Using a two step resource region description, the total overhead involved may be reduced from 480 bits to <= 180 bits assuming 20 MSSes DL traffic are scheduled in a frame.

In some scenarios (without irregular assignment, e.g., assignment for SHO, which needs synchronized resource assignment across all members in active set of a MSS), the overhead of DL region description can be further reduced if the access IE are listed in the same order of Channel ID list. In this case, the CHID field may be omitted and the overhead may be reduced further as a result. See for example the downlink resource allocation scheme shown in Figure 2 which provides a channel definition and a DL access IE to enable the reduced overhead if the channel may be assigned in order. As will be apparent to one of skill in the art a logical channel is shown.

Under this scenario, the overhead involved in allocation region description may be reduced from 480 bits to <= 60 bits.

Figure 3 provides another example where DL-MAP occupies partial type 1 channel 0 and some resource is

Copy provided by USPTO from the IFW Image Database on 05/12/2005

assigned to SHO MSSs and some MSS is allocated both type 1 channel and type 2 channel.

Table 1 provides an Enhanced DL MAP IE in accordance with an embodiment of the invention. This IE may be used for BS to indicate the DL resource allocation by using a two step DL resource assignment method.

Table 1. Enhanced DL MAP IE Format

Syntax	Size	Notes
Enhance_DL_MAP_IE()		
Extended DIUC	4 bits	0x09
Length	4 bits	Length in bytes
Num_Assignment	4 bits	Number of assignments in this IE
For (i=0; i<Num_Assignment;i++)		
{		
CID	16 bits	
DIUC	4 bits	
Boosting	3 bits	
Repetition Coding Indication	2 bits	
Assignment_Code	3 bits	0b000: one type 1 channel assigned and explicitly indicated CHID 0b001: type 2 channel assigned and explicitly indicated CHID of the first type 2 channel 0b010: one type 1 channel + type 2 channel(s) assigned and explicitly indicated CHIDs for the type 1 channel and the first type 2 channel 0b011: Using normal region description 0b100: one type 1 channel assigned and no explicitly indicated CHID 0b101: type 2 channel(s) assigned and no explicitly indicated CHID 0b110: one type 1 channel + type 2 channel(s) assigned and no explicitly indicated CHIDs for the type 1 channel and the first type 2 channel 0b111: reserved
If (Assignment_Code ==		

Copy provided by USPTO from the IFW Image Database on 05/12/2005

000)		
CHID	Num_bits_CHID	Indicated in DCD
If (Assignment_Code == 001)		
{		
CHID	Num_bits_CHID	Indicated in DCD
Num_Channel	2 bits	
}		
If (Assignment_Code == 010)		
{		
CHID	Num_bits_CHID	Indicated in DCD
CHID		
Num_channels	2 bits	
}		
If (Assignment_Code == 011)		
{		
OFDMA_symbol_offset	8 bits	
Subchannel_offset	6 bits	
No. OFDMA symbols	8 bits	
No. subchannels	6 bits	
}		
If (Assignment_Code = 101|110)		
Num_Channel	2 bits	Indicated in DCD
}		
}		

Wherein:

Num_Assignment
Number of assignements in this IE

Assignment_Code
0b000: one type 1 channel assigned and explicitly indicated CHID
0b001: type 2 channel(s) assigned and explicitly indicated the CHID of the first channel assigned
0b010: one type 1 channel + type 2 channel(s) assigned and explicitly indicated CHIDs for the type 1 channel and the first type 2 channel
0b011: Using normal region description; When set, the resource allocation shall override the channel definition
0b100: one type 1 channel assigned and no explicitly indicated CHID (the type 1 channel shall be the channel following the channel (in channel list) assigned in previous type 1 channel assignment)
0b101: type 2 channel(s) assigned and no explicitly indicated CHID (the first type 2 channel shall be the channel following the channel(s) (in channel list) assigned in previous type 2 channel

Copy provided by USPTO from the IFW Image Database on 05/12/2005

assignment)

0b110: one type 1 channel + type 2 channel(s) assigned and no explicitly indicated CHIDs for the type 1 channel and the type 2 channel (the type 1 channel shall be the channel following the channel (in channel list) assigned in previous type 1 channel assignment and the first type 2 channel shall be the channel following the channel(s) (in channel list) assigned in previous type 2 channel assignment)

0b111: reserved

CHID

Channel index defined in DCD message

Num_Channels

Number of type 2 channel(s) assigned

Table 2 provides DCD channel encoding in accordance with an embodiment of the invention.

Table 2 – DCD Channel Encoding

Name	Type	Length	Values
DL allocated subchannel bitmap for optional AMC permutation	18	6	This is a bitmap describing the bands allocated to the segment in the DL, when using the optional AMC permutation (see 8.4.6.3). The LSB of the first byte shall correspond to band 0. For any bit that is not set, the corresponding band shall not be used by the MSS on that segment.

DL channel definition	19	variable	Size of CHID field (6 bits)
			Num_Type 1_channels (6 bits)
			For (i = 0; i<Num_type1_channel;i++)
			{
			OFDMA symbol offset (8 bits)
			Subchannel offset (6 bits)
			No. OFDMA symbols (8 bits)
			No. subchannels (6 bits)
			}
			Num_Type 2_channels (6 bits)
			For (i = 0; i<Num_type2_channel;i++)
			{
			OFDMA symbol offset (8 bits)
			Subchannel offset (6 bits)
			No. OFDMA symbols (8 bits)
			No. subchannels (6 bits)
			}
			padding bits to align boundary of byte

Copy provided by USPTO from the IFW Image Database on 05/12/2005

With reference to Figure 4, a base station controller (BSC) 10 controls wireless communications within multiple cells 12, which are served by corresponding base stations (BS) 14. In general, each base station 14 facilitates communications using OFDM with mobile terminals 16, which are within the cell 12 associated with the corresponding base station 14. The movement of the mobile terminals 16 in relation to the base stations 14 results in significant fluctuation in channel conditions. As illustrated, the base stations 14 and mobile terminals 16 may include multiple antennas to provide spatial diversity for communications.

A high level overview of the mobile terminals 16 and base stations 14 of the present invention is provided prior to delving into the structural and functional details of the preferred embodiments. With reference to Figure 5, a base station 14 configured according to one embodiment of the present invention is illustrated. The base station 14 generally includes a control system 20, a baseband processor 22, transmit circuitry 24, receive circuitry 26, multiple antennas 28, and a network interface 30. The receive circuitry 26 receives radio frequency signals bearing information from one or more remote transmitters provided by mobile terminals 16 (illustrated in Figure 6). Preferably, a low noise amplifier and a filter (not shown) cooperate to amplify and remove broadband interference from the signal for processing. Downconversion and digitization circuitry (not shown) will then downconvert the filtered, received signal to an intermediate or baseband frequency signal, which is then digitized into one or more digital streams.

The baseband processor 22 processes the digitized received signal to extract the information or data bits conveyed in the received signal. This processing typically comprises demodulation, decoding, and error correction operations. As such, the baseband processor 22 is generally implemented in one or more digital signal processors (DSPs) or application-specific integrated circuits (ASICs). The received information is then sent across a wireless network via the network interface 30 or transmitted to another mobile terminal 16 serviced by the base station 14.

On the transmit side, the baseband processor 22 receives digitized data, which may represent voice, data, or control information, from the network interface 30 under the control of control system 20, and encodes the data for transmission. The encoded data is output to the transmit circuitry 24, where it is modulated by a carrier signal having a desired transmit frequency or frequencies. A power amplifier (not shown) will amplify the modulated carrier signal to a level appropriate for transmission, and deliver the modulated carrier signal to the

Copy provided by USPTO from the IFW Image Database on 05/12/2005

antennas 28 through a matching network (not shown). Modulation and processing details are described in greater detail below.

With reference to Figure 6, a mobile terminal 16 configured according to one embodiment of the present invention is illustrated. Similarly to the base station 14, the mobile terminal 16 will include a control system 32, a baseband processor 34, transmit circuitry 36, receive circuitry 38, multiple antennas 40, and user interface circuitry 42. The receive circuitry 38 receives radio frequency signals bearing information from one or more base stations 14. Preferably, a low noise amplifier and a filter (not shown) cooperate to amplify and remove broadband interference from the signal for processing. Downconversion and digitization circuitry (not shown) will then downconvert the filtered, received signal to an intermediate or baseband frequency signal, which is then digitized into one or more digital streams.

The baseband processor 34 processes the digitized received signal to extract the information or data bits conveyed in the received signal. This processing typically comprises demodulation, decoding, and error correction operations, as will be discussed on greater detail below. The baseband processor 34 is generally implemented in one or more digital signal processors (DSPs) and application specific integrated circuits (ASICs).

For transmission, the baseband processor 34 receives digitized data, which may represent voice, data, or control information, from the control system 32, which it encodes for transmission. The encoded data is output to the transmit circuitry 36, where it is used by a modulator to modulate a carrier signal that is at a desired transmit frequency or frequencies. A power amplifier (not shown) will amplify the modulated carrier signal to a level appropriate for transmission, and deliver the modulated carrier signal to the antennas 40 through a matching network (not shown). Various modulation and processing techniques available to those skilled in the art are applicable to the present invention.

In OFDM modulation, the transmission band is divided into multiple, orthogonal carrier waves. Each carrier wave is modulated according to the digital data to be transmitted. Because OFDM divides the transmission band into multiple carriers, the bandwidth per carrier decreases and the modulation time per carrier increases. Since the multiple carriers are transmitted in parallel, the transmission rate for the digital data, or symbols, on any given carrier is lower than when a single carrier is used.

Copy provided by USPTO from the IFW Image Database on 05/12/2005

OFDM modulation requires the performance of an Inverse Fast Fourier Transform (IFFT) on the information to be transmitted. For demodulation, the performance of a Fast Fourier Transform (FFT) on the received signal is required to recover the transmitted information. In practice, the IFFT and FFT are provided by digital signal processing carrying out an Inverse Discrete Fourier Transform (IDFT) and Discrete Fourier Transform (DFT), respectively. Accordingly, the characterizing feature of OFDM modulation is that orthogonal carrier waves are generated for multiple bands within a transmission channel. The modulated signals are digital signals having a relatively low transmission rate and capable of staying within their respective bands. The individual carrier waves are not modulated directly by the digital signals. Instead, all carrier waves are modulated at once by IFFT processing.

In the preferred embodiment, OFDM is used for at least the downlink transmission from the base stations 14 to the mobile terminals 16. Each base station 14 is equipped with n transmit antennas 28, and each mobile terminal 16 is equipped with m receive antennas 40. Notably, the respective antennas can be used for reception and transmission using appropriate duplexers or switches and are so labeled only for clarity.

With reference to Figure 7, a logical OFDM transmission architecture is provided according to one embodiment. Initially, the base station controller 10 will send data to be transmitted to various mobile terminals 16 to the base station 14. The base station 14 may use the CQIs associated with the mobile terminals to schedule the data for transmission as well as select appropriate coding and modulation for transmitting the scheduled data. The CQIs may be directly from the mobile terminals 16 or determined at the base station 14 based on information provided by the mobile terminals 16. In either case, the CQI for each mobile terminal 16 is a function of the degree to which the channel amplitude (or response) varies across the OFDM frequency band.

The scheduled data 44, which is a stream of bits, is scrambled in a manner reducing the peak-to-average power ratio associated with the data using data scrambling logic 46. A cyclic redundancy check (CRC) for the scrambled data is determined and appended to the scrambled data using CRC adding logic 48. Next, channel coding is performed using channel encoder logic 50 to effectively add redundancy to the data to facilitate recovery and error correction at the mobile terminal 16. Again, the channel coding for a particular mobile terminal 16 is based on the CQI. The channel encoder logic 50 uses known Turbo encoding techniques in one

Copy provided by USPTO from the IFW Image Database on 05/12/2005

embodiment. The encoded data is then processed by rate matching logic 52 to compensate for the data expansion associated with encoding.

Bit interleaver logic 54 systematically reorders the bits in the encoded data to minimize the loss of consecutive data bits. The resultant data bits are systematically mapped into corresponding symbols depending on the chosen baseband modulation by mapping logic 56. Preferably, Quadrature Amplitude Modulation (QAM) or Quadrature Phase Shift Key (QPSK) modulation is used. The degree of modulation is preferably chosen based on the CQI for the particular mobile terminal. The symbols may be systematically reordered to further bolster the immunity of the transmitted signal to periodic data loss caused by frequency selective fading using symbol interleaver logic 58.

At this point, groups of bits have been mapped into symbols representing locations in an amplitude and phase constellation. When spatial diversity is desired, blocks of symbols are then processed by space-time block code (STC) encoder logic 60, which modifies the symbols in a fashion making the transmitted signals more resistant to interference and more readily decoded at a mobile terminal 16. The STC encoder logic 60 will process the incoming symbols and provide n outputs corresponding to the number of transmit antennas 28 for the base station 14. The control system 20 and/or baseband processor 22 will provide a mapping control signal to control STC encoding. At this point, assume the symbols for the n outputs are representative of the data to be transmitted and capable of being recovered by the mobile terminal 16. See A.F. Naguib, N. Seshadri, and A.R. Calderbank, "Applications of space-time codes and interference suppression for high capacity and high data rate wireless systems," Thirty-Second Asilomar Conference on Signals, Systems & Computers, Volume 2, pp. 1803-1810, 1998, which is incorporated herein by reference in its entirety.

For the present example, assume the base station 14 has two antennas 28 (n=2) and the STC encoder logic 60 provides two output streams of symbols. Accordingly, each of the symbol streams output by the STC encoder logic 60 is sent to a corresponding IFFT processor 62, illustrated separately for ease of understanding. Those skilled in the art will recognize that one or more processors may be used to provide such digital signal processing, alone or in combination with other processing described herein. The IFFT processors 62 will preferably operate on the respective symbols to provide an inverse Fourier Transform. The output of the IFFT processors 62 provides symbols in the time domain. The time domain symbols are grouped into frames, which are associated with a prefix by like insertion logic 64. Each of the resultant signals is up-converted in the

Copy provided by USPTO from the IFW Image Database on 05/12/2005

digital domain to an intermediate frequency and converted to an analog signal via the corresponding digital up-conversion (DUC) and digital-to-analog (D/A) conversion circuitry 66. The resultant (analog) signals are then simultaneously modulated at the desired RF frequency, amplified, and transmitted via the RF circuitry 68 and antennas 28. Notably, pilot signals known by the intended mobile terminal 16 are scattered among the sub-carriers. The mobile terminal 16, which is discussed in detail below, will use the pilot signals for channel estimation.

Reference is now made to Figure 8 to illustrate reception of the transmitted signals by a mobile terminal 16. Upon arrival of the transmitted signals at each of the antennas 40 of the mobile terminal 16, the respective signals are demodulated and amplified by corresponding RF circuitry 70. For the sake of conciseness and clarity, only one of the two receive paths is described and illustrated in detail. Analog-to-digital (A/D) converter and down-conversion circuitry 72 digitizes and downconverts the analog signal for digital processing. The resultant digitized signal may be used by automatic gain control circuitry (AGC) 74 to control the gain of the amplifiers in the RF circuitry 70 based on the received signal level.

Initially, the digitized signal is provided to synchronization logic 76, which includes coarse synchronization logic 78, which buffers several OFDM symbols and calculates an auto-correlation between the two successive OFDM symbols. A resultant time index corresponding to the maximum of the correlation result determines a fine synchronization search window, which is used by fine synchronization logic 80 to determine a precise framing starting position based on the headers. The output of the fine synchronization logic 80 facilitates frame acquisition by frame alignment logic 84. Proper framing alignment is important so that subsequent FFT processing provides an accurate conversion from the time to the frequency domain. The fine synchronization algorithm is based on the correlation between the received pilot signals carried by the headers and a local copy of the known pilot data. Once frame alignment acquisition occurs, the prefix of the OFDM symbol is removed with prefix removal logic 86 and resultant samples are sent to frequency offset correction logic 88, which compensates for the system frequency offset caused by the unmatched local oscillators in the transmitter and the receiver. Preferably, the synchronization logic 76 includes frequency offset and clock estimation logic 82, which is based on the headers to help estimate such effects on the transmitted signal and provide those estimations to the correction logic 88 to properly process OFDM symbols.

Copy provided by USPTO from the IFW Image Database on 05/12/2005

At this point, the OFDM symbols in the time domain are ready for conversion to the frequency domain using FFT processing logic 90. The results are frequency domain symbols, which are sent to processing logic 92. The processing logic 92 extracts the scattered pilot signal using scattered pilot extraction logic 94, determines a channel estimate based on the extracted pilot signal using channel estimation logic 96, and provides channel responses for all sub-carriers using channel reconstruction logic 98. In order to determine a channel response for each of the sub-carriers, the pilot signal is essentially multiple pilot symbols that are scattered among the data symbols throughout the OFDM sub-carriers in a known pattern in both time and frequency. Figure 9 illustrates an exemplary scattering of pilot symbols among available sub-carriers over a given time and frequency plot in an OFDM environment. Continuing with Figure 8, the processing logic compares the received pilot symbols with the pilot symbols that are expected in certain sub-carriers at certain times to determine a channel response for the sub-carriers in which pilot symbols were transmitted. The results are interpolated to estimate a channel response for most, if not all, of the remaining sub-carriers for which pilot symbols were not provided. The actual and interpolated channel responses are used to estimate an overall channel response, which includes the channel responses for most, if not all, of the sub-carriers in the OFDM channel.

The frequency domain symbols and channel reconstruction information, which are derived from the channel responses for each receive path are provided to an STC decoder 100, which provides STC decoding on both received paths to recover the transmitted symbols. The channel reconstruction information provides equalization information to the STC decoder 100 sufficient to remove the effects of the transmission channel when processing the respective frequency domain symbols

The recovered symbols are placed back in order using symbol de-interleaver logic 102, which corresponds to the symbol interleaver logic 58 of the transmitter. The de-interleaved symbols are then demodulated or de-mapped to a corresponding bitstream using de-mapping logic 104. The bits are then de-interleaved using bit de-interleaver logic 106, which corresponds to the bit interleaver logic 54 of the transmitter architecture. The de-interleaved bits are then processed by rate de-matching logic 108 and presented to channel decoder logic 110 to recover the initially scrambled data and the CRC checksum. Accordingly, CRC logic 112 removes the CRC checksum, checks the scrambled data in traditional fashion, and provides it to the de-scrambling logic 114 for de-scrambling using the known base station de-scrambling code to recover the originally transmitted data 116.

Copy provided by USPTO from the IFW Image Database on 05/12/2005

In parallel to recovering the data 116, a CQI, or at least information sufficient to create a CQI at the base station 14, is determined and transmitted to the base station 14. As noted above, the CQI in a preferred embodiment is a function of the carrier-to-interference ratio (CIR), as well as the degree to which the channel response varies across the various sub-carriers in the OFDM frequency band. For this embodiment, the channel gain for each sub-carrier in the OFDM frequency band being used to transmit information are compared relative to one another to determine the degree to which the channel gain varies across the OFDM frequency band. Although numerous techniques are available to measure the degree of variation, one technique is to calculate the standard deviation of the channel gain for each sub-carrier throughout the OFDM frequency band being used to transmit data.

Copy provided by USPTO from the IFW Image Database on 05/12/2005

WE CLAIM:

1. A method comprising:
   - Provisioning a MAP for allocating resources to a terminal
   - Wherein said MAP includes at least one channel
   - Wherein said channel includes resource divisions and channel identifier assignments
   - Whereby said resources are allocated based on said at least one channel

Copy provided by USPTO from the IFW Image Database on 05/12/2005

Figure 1

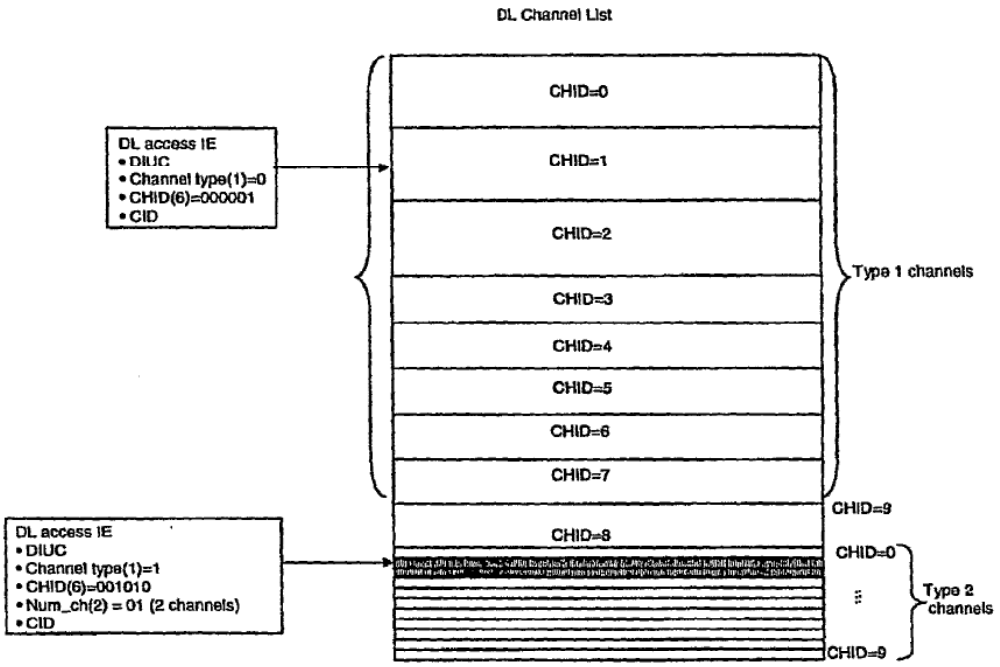

Copy provided by USPTO from the IFW Image Database on 05/12/2005

Figure 2

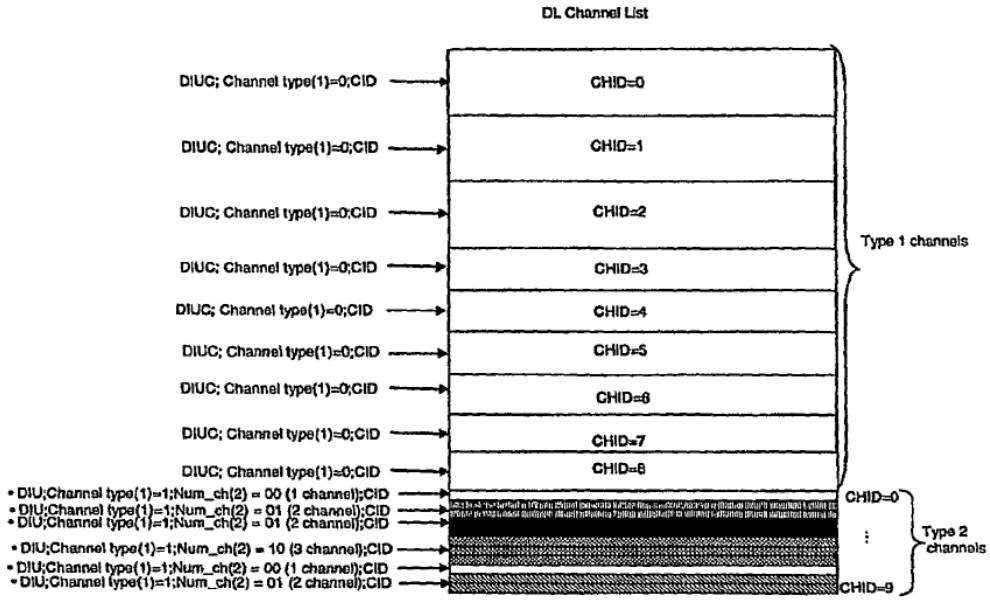

Copy provided by USPTO from the IFW Image Database on 05/12/2005

Figure 3

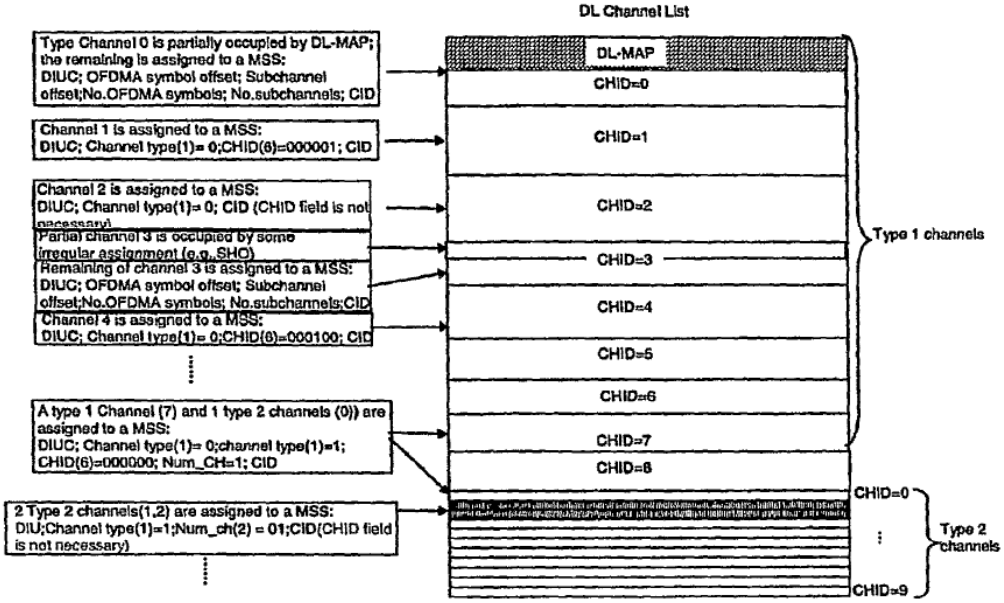

Copy provided by USPTO from the IFW Image Database on 05/12/2005

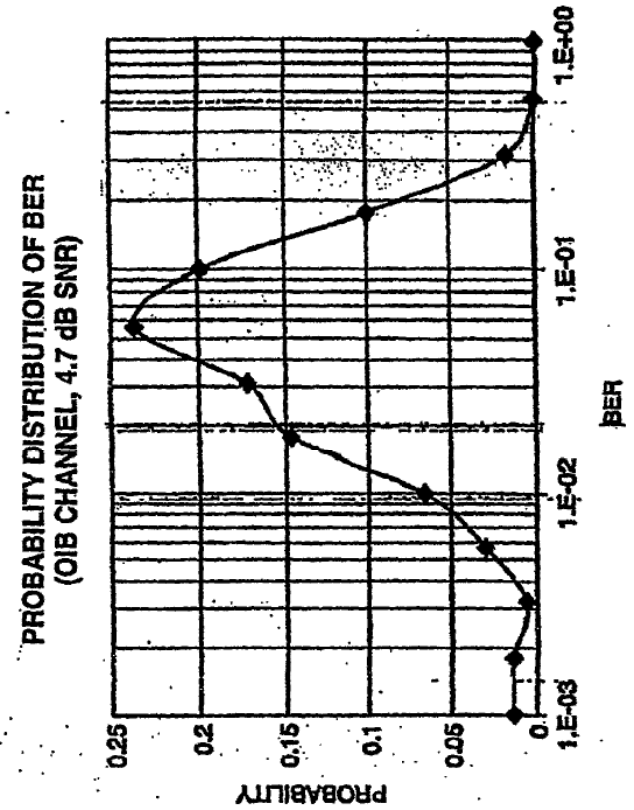

Figure 4

Copy provided by USPTO from the IFW Image Database on 05/10/2006

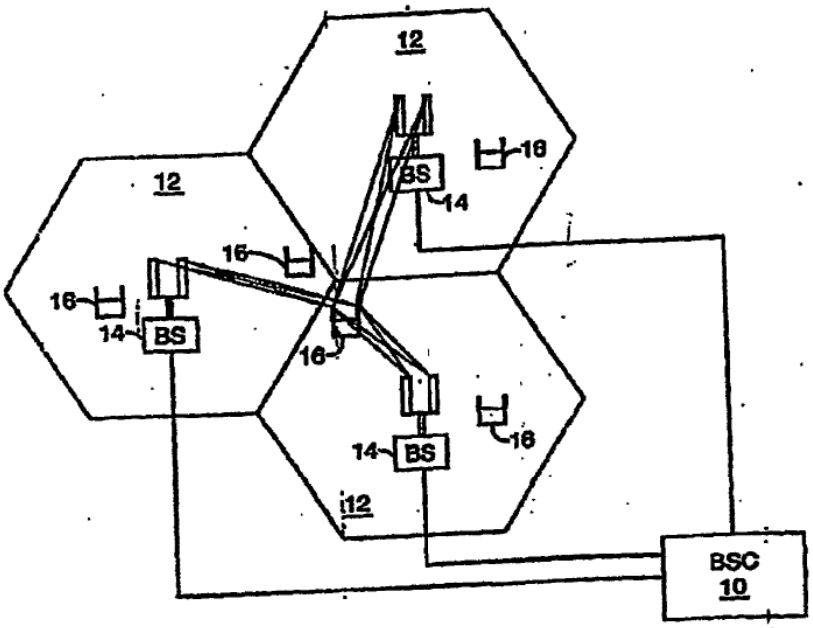

Figure 5

Copy provided by USPTO from the IFW Image Database on 05/12/2005

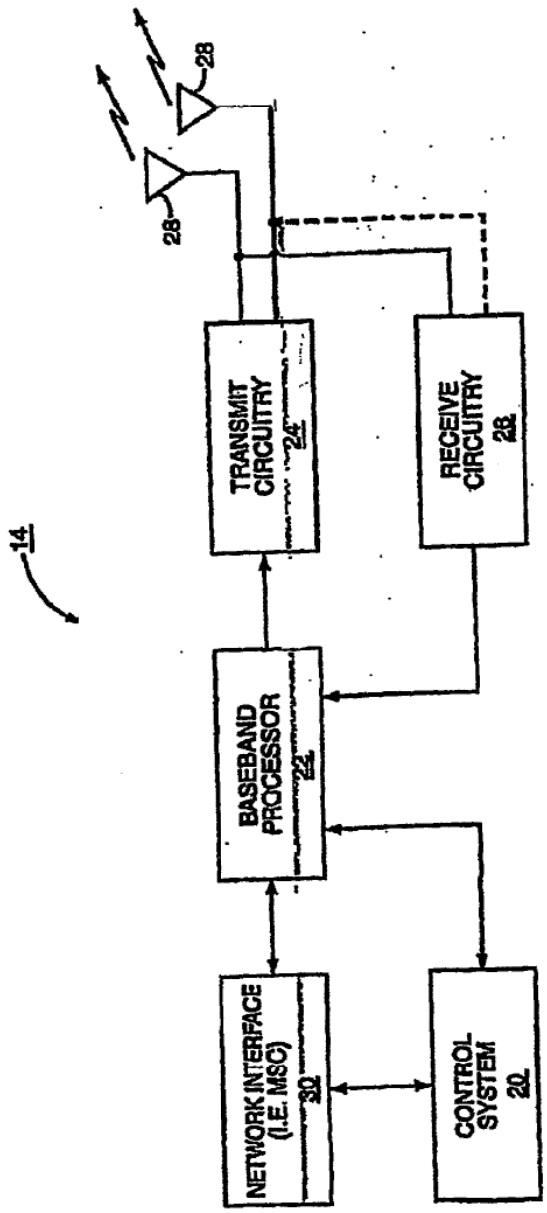

Figure 6

Copy provided by USPTO from the IFW Image Database on 05/12/2005

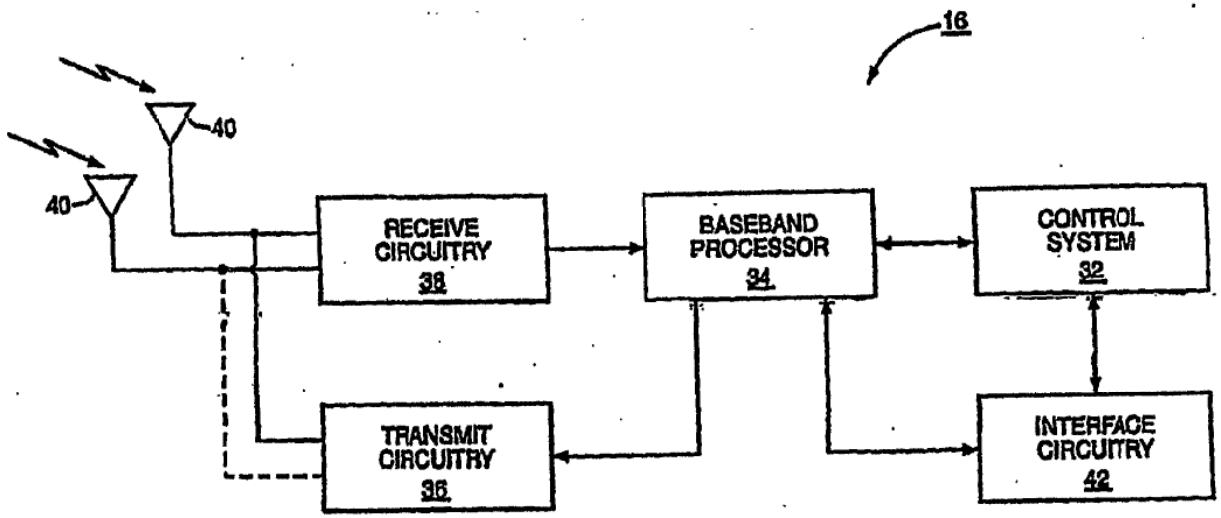

Figure 7

Copy provided by USPTO from the IFW Image Database on 05/10/2011

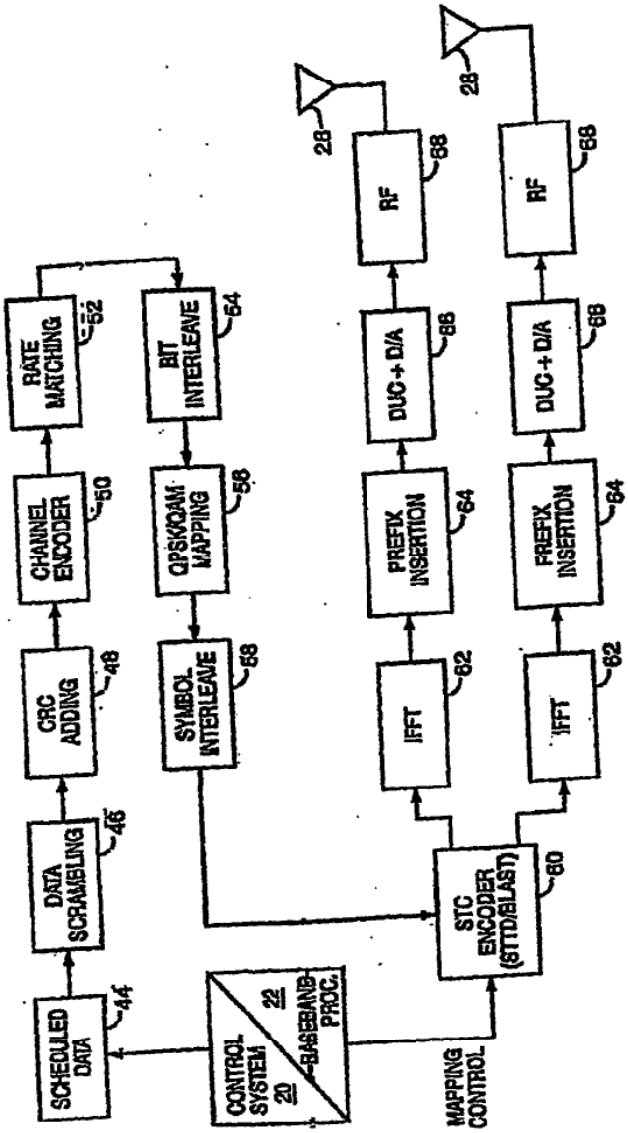

Figure 8

Copy provided by USPTO from the IFW Image Database on 05/10/2005

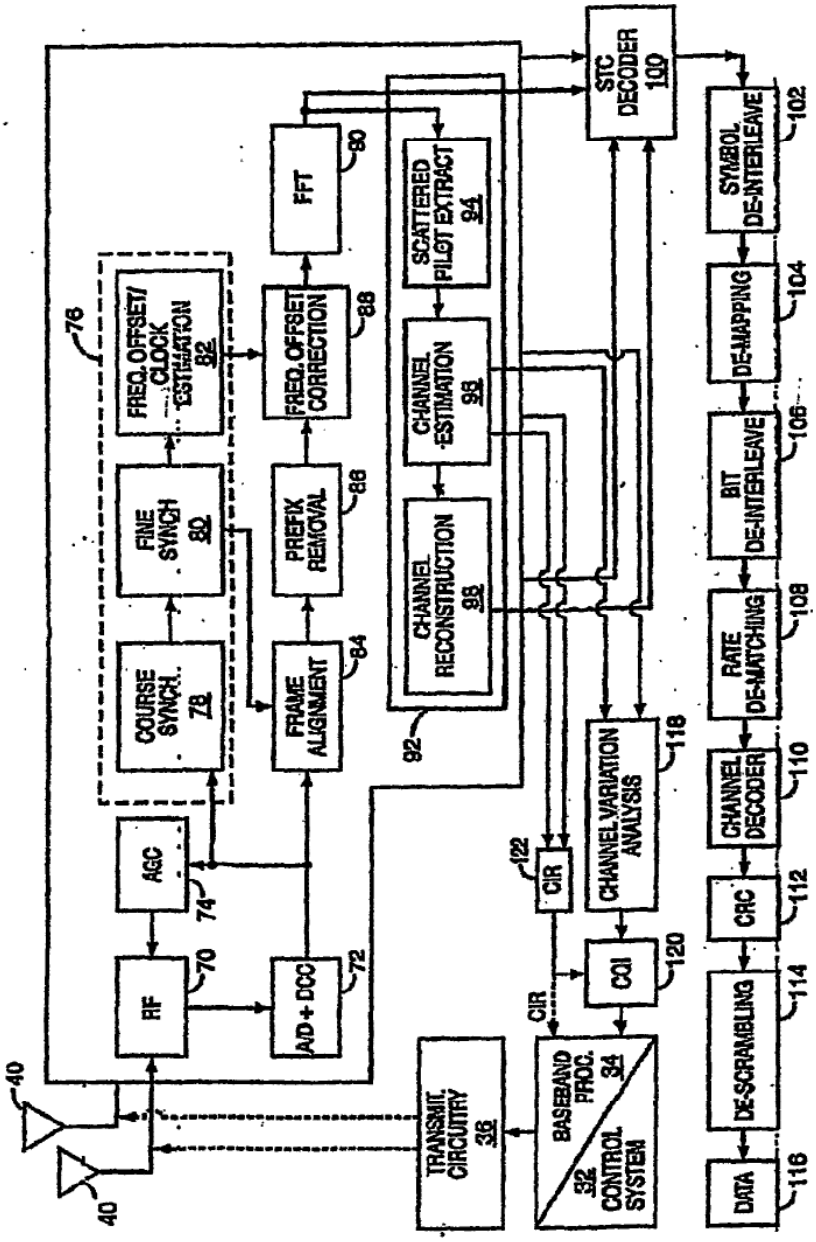

Figure 9

Copy provided by USPTO from the IFW Image Database on 05/12/2005