UNITED STATES PATENT AND TRADEMARK OFFICE

BEFORE THE PATENT TRIAL AND APPEAL BOARD

_____

BELL NORTHERN RESEARCH LLC,
Petitioner,

v.

MEDIATEK INC. AND NXP USA, INC.,
Patent Owner.

_____

United States Patent No. 8,416,862

DECLARATION OF SYLVIA D. HALL-ELLIS, PH.D.

I. INTRODUCTION

1. My name is Sylvia D. Hall-Ellis. I have been retained as an expert by MediaTek Inc. and NXP USA, INC. (the "Petitioners"). I am over the age of 18 and am competent to testify regarding the facts and opinions discussed below.

2. I have written this Declaration at the request of the Petitioners to provide my expert opinion regarding the authenticity and public availability of certain documents discussed herein. My Declaration sets forth my opinions in detail and provides the basis for my opinions regarding the public availability of these documents.

3. I reserve the right to supplement or amend my opinions, and bases for them, in response any additional evidence, testimony, discovery, argument, and/or other additional information that may be provided to me after the date of this Declaration.

4. I am being compensated for my time spent working on this matter at my normal consulting rate of $350 per hour, plus reimbursement for any additional reasonable expenses. My compensation is not in any way tied to the content of this Declaration, the substance of my opinions, or the outcome of any related litigation. I have no other interests in this proceeding or with any of the parties.

5. All of the materials that I considered are discussed in this declaration.

II. QUALIFICATIONS

6. I am currently an Adjunct Professor in the School of Information at San José State University. I obtained a Master of Library Science from the University of North Texas in 1972 and a Ph.D. in Library and Information Science from the University of Pittsburgh in 1985. Over the last fifty years, I have held various positions in the field of library and information resources. I was first employed as a librarian in 1966 and have been involved in the field of library sciences since, holding numerous positions.

7. I am a member of the American Library Association (ALA) and its CORE Division, and I served on the Committee on Cataloging: Resource and Description (which wrote the new cataloging rules) and as the founding chair of the Committee for Education and Training of Catalogers and the Competencies and Education for a Career in Cataloging Interest Group. I also served as the Chair of the ALCTS Division's Task Force on Competencies and Education for a Career in Cataloging, the Chair for the ALA Office of Diversity's Committee on Diversity, a member of the national Board of Directors for REFORMA, a member of the Editorial Board for the ALCTS premier cataloging journal, *Library Resources and Technical Services*, a co-chair of the Membership Committee for the Library Research Round Table (LRRT), and as member of the LRRT Nominating Committee.

8. I have also given over one hundred presentations in the field, including several on library cataloging systems and Machine-Readable Cataloging ("MARC") standards. My current research interests include library cataloging systems, metadata, and organization of electronic resources.

9. My full curriculum vitae is attached hereto as an Appendix A to this Declaration.

III. LIBRARY CATALOGING PRACTICES

10. I am fully familiar with the library cataloging standard known as the Machine-Readable Catalog or MARC standard, which is an industry-wide standard method of storing and organizing library catalog information.[1] MARC was first developed in the 1960s by the Library of Congress. A MARC-compatible library is one that has a catalog consisting of individual MARC records for each of its items. Today, MARC is the primary communications protocol for the transfer and storage of bibliographic metadata in libraries.[2]

---

[1] The full text of the standard is available from the Library of Congress at http://www.loc.gov/marc/bibliographic/.

[2] Almost every major library in the world is MARC-compatible. *See, e.g.*, *MARC Frequently Asked Questions (FAQ)*, Library of Congress, https://www.loc.gov/marc/faq.html (last visited August 25, 2023) ("MARC is the acronym for MAchine-Readable Cataloging. It defines a data format that emerged from a Library of Congress-led initiative that began nearly fifty years ago. It provides the mechanism by which computers exchange, use, and interpret bibliographic information, and its data elements make up the foundation of most library catalogs used today."). MARC is the ANSI/NISO Z39.2-1994 (reaffirmed 2016) standard for Information Interchange Format.

11. A MARC record comprises several fields, each of which contains specific data about the work or the record itself. Each field is identified by a standardized, unique, three-digit code corresponding to the type of data that follow. For example, the creation date of the MARC record is recorded in field 008, a work's title is recorded in field 245, the primary author of the work is recorded in field 100, an item's International Standard Book Number ("ISBN") is recorded in field 020, an item's International Standard Serial Number ("ISSN") is recorded in field 022, an item's Library of Congress call number is recorded in field 050, and the publication date is recorded in field 260 under the subfield "c." If a work is a periodical, then its publication frequency is recorded in field 310, and the publication dates (e.g., the first and last publication) are recorded in field 362, which is also referred to as the enumeration/chronology field.

12. The library that created the record is recorded in field 040 in subfield "a" with a unique library code. When viewing the MARC record online via Online Computer Library Center's ("OCLC") bibliographic database, hovering over this code with the mouse reveals the full name of the library. I used this method of "mousing over" the library codes in the OCLC database to identify the originating library for the MARC records discussed in this Declaration. Where this "mouse over" option was not available, I consulted the Directory of OCLC Libraries in order

to identify the institution that created the MARC record.[3]

13. MARC records also include several fields that include subject matter classification information. An overview of MARC record fields is available through the Library of Congress.[4] For example, 6XX fields are termed "Subject Access Fields."[5] Among these, for example, is the 650 field; this is the "Subject Added Entry – Topical Term" field.[6] The 650 field is a "[s]ubject added entry in which the entry element is a topical term." These entries "are assigned to a bibliographic record to provide access according to generally accepted thesaurus-building rules (e.g., *Library of Congress Subject Headings* (LCSH))." Further, MARC records include call numbers, which themselves include a classification number. For example, the 050 field is the "Library of Congress Call Number."[7] A defined portion of the Library of Congress Call Number is the classification number, and the "source of the classification number is *Library of Congress Classification* and the *LC Classification-Additions and Changes*." Thus, included in the 050 field is a subject matter classification. Each item in a library has a single classification number. A library selects a classification scheme (*e.g.*, the Library of Congress Classification scheme just described or a similar scheme such as the Dewey Decimal Classification

[3] https://www.oclc.org/en/contacts/libraries.html
[4] http://www.loc.gov/marc/bibliographic/
[5] http://www.loc.gov/marc/bibliographic/bd6xx.html
[6] http://www.loc.gov/marc/bibliographic/bd650.html
[7] http://www.loc.gov/marc/bibliographic/bd050.html

scheme) and uses it consistently. When the Library of Congress assigns the classification number, it appears as part of the 050 field. If a local library assigns the classification number, it appears in a 090 field. In either scenario, the MARC record includes a classification number that represents a subject matter classification.

14. The OCLC was created "to establish, maintain and operate a computerized library network and to promote the evolution of library use, of libraries themselves, and of librarianship, and to provide processes and products for the benefit of library users and libraries, including such objectives as increasing availability of library resources to individual library patrons and reducing the rate of rise of library per-unit costs, all for the fundamental public purpose of furthering ease of access to and use of the ever-expanding body of worldwide scientific, literary and educational knowledge and information."[8] Among other services, OCLC and its members are responsible for maintaining the WorldCat database,[9] used by independent and institutional libraries throughout the world.

15. OCLC also provides its members online access to MARC records through its OCLC bibliographic database. When an OCLC member institution

---

[8] Third Article, Amended Articles of Incorporation of OCLC Online Computer Library Center, Incorporated (available at https://www.oclc.org/content/dam/oclc/membership/articles-of-incorporation.pdf).
[9] http://www.worldcat.org/

acquires a work, it creates a MARC record for this work in its computer catalog system in the ordinary course of its business. MARC records created at the Library of Congress are directly uploaded or may be tape-loaded into the OCLC database through a subscription to MARC Distribution Services daily or weekly. Once the MARC record is created by a cataloger at an OCLC member institution or is tape-loaded from a participating institution, the MARC record is then made available to any other OCLC members online, and therefore made available to the public. Accordingly, once the MARC record is created by a cataloger at an OCLC member institution or is tape-loaded from the Library of Congress or another library anywhere in the world, any publication corresponding to the MARC record has been cataloged and indexed according to its subject matter such that a person interested in that subject matter could, with reasonable diligence, locate and access the publication through any library with access to the OCLC bibliographic database or through the Library of Congress.

16. When an OCLC member institution creates a new MARC record, OCLC automatically supplies the date of creation for that record. The date of creation for the MARC record appears in the fixed field (008), characters 00 through 05. The MARC record creation date reflects the date on which, or shortly after which, the item was first acquired or cataloged. Initially, field 005 of the MARC record is automatically populated with the date the MARC record was created in

year, month, day format (YYYYMMDD) (some of the newer library catalog systems also include hour, minute, second (HHMMSS)). Thereafter, the library's computer system may automatically update the date in field 005 every time the library updates the MARC record (*e.g.*, to reflect that an item has been moved to a different shelving location within the library). Field 005 is visible when viewing a MARC record via an appropriate computerized interface, but when a MARC record is printed to hardcopy, no "005" label appears. The initial field 005 date (*i.e.*, the date the MARC record was created) does appear, however, next to the label "Entered."[10] The date upon which the most recent update to field 005 occurred also appears, next to the label "Replaced." Thus, when an item's MARC record has been printed to hardcopy—as is the case with the exhibits to this Declaration—the date reflected next to the label "Entered" is necessarily on or after the date the library first cataloged and indexed the underlying item.

17. Once one library has cataloged and indexed a publication by creating a MARC record for that publication, other libraries that receive the publication do not create additional MARC records—the other libraries instead rely on the original MARC record. They may update or revise the MARC record to ensure accuracy,

[10] In this Declaration, I sometimes refer to the "Entered" entry as Field 008, characters 00-05. Field 005 is visible when viewing a MARC record via an appropriate computerized interface. But when a MARC record is printed directly to hardcopy from the OCLC database, the "005" label is not shown. The date in the 005 field instead appears next to the label "Replaced."

but they do not replace or duplicate it. This practice does more than save libraries from duplicating labor. It also enhances the accuracy of MARC records. Further, it allows librarians around the world to know that a particular MARC record is authoritative (in contrast, a hypothetical system wherein duplicative records were created would result in confusion as to which record is authoritative).

18. The date of creation of the MARC record by a cataloger at an OCLC member institution reflects when the underlying item is accessible to the public. Upwards of two-thirds to three-quarters of book sales to libraries come from a jobber or wholesaler for online and print resources. These resellers make it their business to provide books to their customers as fast as possible, often providing turnaround times of only a single day after publication. Libraries purchase a significant portion of the balance of their books directly from publishers themselves, which provide delivery on a similarly expedited schedule. In general, libraries make these purchases throughout the year as the books are published and shelve the books as soon thereafter as possible in order to make the books available to their patrons. Thus, books are generally available at libraries across the country within just a few days of publication.

19. Catalogers can create MARC records for all types of print, online, and digital resources. For example, MARC records cover serial publications, including both serially published monographs and journals. OCLC hosts MARC records for

more than 320 million serial publications. Serial publications are those publications that have the same collective title but are intended to be continued indefinitely with enumeration such as a volume or issue number (*e.g.*, magazines, journals, etc.). In the OCLC bibliographic database, the first issue or volume of the monographic serial is typically cataloged (*i.e.*, a corresponding MARC record is created), but the date is left open-ended with the use of a punctuation mark such as a dash. MARC records for serial publications represent the entire run of the title. With knowledge of the first issue or volume published, future issues or volumes can be predicted based on the information provided in the MARC record, for example in field 362. In my extensive professional experience, is it highly unusual for a library to stop collecting and shelving a serial publication prior to the time of its cessation. If a subscription to a serial publication ends or is cancelled, the library will denote that it has stopped receiving new issues or volumes by filling in the end date in the MARC record.

20. As was the best practice among libraries, issues arrived at a central facility and were immediately received, verified as part of a subscription, checked in, and stamped with the institution's name and date. Determining that the issue was part of the library subscription ensured that the entire set of publications for the year had been received so that they could be professionally bound and retained. This process also verified that each of the published issues arrived so that the library staff did not have to request or claim an issue that did not arrive as expected. In large

public libraries with branches and multi-campus libraries within academic institutions, the journals were sorted and delivered to the subscribing unit. The issues were frequently stamped again to acknowledge receipt. The new issue was placed in the public area; the older issue was stored so that it remained available.

21. The foregoing process has been standard library practice longer than I have been working in the profession. I first learned the steps in the process in the late 1970s and later supervised it. Although the checking in process has become automated and now links electronically to holdings records for the MARC record for each serial title, the manual stamping and placing the issue in a public area has not changed for 50 years. Unless I note otherwise below in reference to a specific serial publication, it is my expert opinion that this standard protocol was followed for each of the serial publications discussed below.

22. In preparing this Declaration, I used authoritative databases, such as the OCLC bibliographic database and the Library of Congress Online Catalog, to confirm citation details of the various publications discussed.

23. *Indexing*. A researcher may discover material relevant to his or her topic in a variety of ways. One common means of discovery is to search for relevant information in an index of periodical and other publications. Having found relevant material, the researcher will then normally obtain it online, look for it in libraries, or purchase it from the publisher, a bookstore, a document delivery service, or other

provider. Sometimes, the date of a document's public accessibility will involve both indexing and library date information. However, date information for indexing entries is often unavailable. This is especially true for online indices.

24. Indexing services use a wide variety of controlled vocabularies to provide subject access and other means of discovering the content of documents. The formats in which these access terms are presented vary from service to service.

25. Online indexing services commonly provide bibliographic information, abstracts, and full-text copies of the indexed publications, along with a list of the documents cited in the indexed publication. These services also often provide lists of publications that cite a given document.

26. A citation of a document by another is evidence that the document was publicly available and in use no later than the publication date of the citing document.

IV. PRELIMINARIES

27. *Scope of this declaration.* I am not an attorney and will not offer opinions on the law. I am, however, rendering my expert opinion on the authenticity of the documents referenced herein and when and how each of these documents was disseminated or otherwise made available to the extent that persons interested and ordinarily skilled in the subject matter or art, exercising reasonable diligence, could have located the documents before September 28, 2004.

28. I am informed by counsel that a printed publication qualifies as publicly accessible as of the date it was disseminated or otherwise made available such that a person interested in and ordinarily skilled in the relevant subject matter could locate it through the exercise of ordinary diligence.

29. While I understand that the determination of public accessibility under the foregoing standard rests on a case-by-case analysis of the facts particular to an individual publication, I also understand that a printed publication is rendered "publicly accessible" if it is cataloged and indexed by a library such that a person interested in the relevant subject matter could locate it exercising reasonable diligence (*i.e.*, I understand that cataloging and indexing by a library in a manner that permits a person of ordinary skill in the relevant subject matter to locate the publication is sufficient, though there are other ways that a printed publication may qualify as publicly accessible). One manner of sufficient indexing is indexing according to subject matter category. I understand that the cataloging and indexing by a single library of a single instance of a particular printed publication is sufficient, even if the single library is in a foreign country. I understand that, even if access to a library is restricted, a printed publication that has been cataloged and indexed therein is publicly accessible so long as a presumption is raised that the portion of the public concerned with the relevant subject matter would know of the printed publication. I also understand that the cataloging and indexing of information that

would guide a person interested in the relevant subject matter to the printed publication, such as the cataloging and indexing of an abstract for the printed publication, is sufficient to render the printed publication publicly accessible.

30. I understand that routine business practices, such as general library cataloging and indexing practices, can be used to establish an approximate date on which a printed publication became publicly accessible.

31. *Persons of ordinary skill in the art*. I am told by counsel that the subject matter of this proceeding relates generally to electrical and computer engineering, and more specifically, the field of wireless communications and networks.

32. I have been informed by counsel that a "person of ordinary skill in the art at the time of the invention" (POSITA) is a hypothetical person who is presumed to be familiar with the relevant field and its literature at the time of the invention. This hypothetical person is also a person of ordinary creativity, capable of understanding the scientific principles applicable to the pertinent field.

33. I am told by counsel that persons of ordinary skill in this subject matter or art would have had at least a bachelor's degree in electrical engineering, computer engineering, computer science, or a related field and at least 2 years of experience in the field of wireless communication, though more education could have compensated for less experience and vice versa.

34. It is my opinion that such a person would have been engaged in

research, learning through study and practice in the field and possibly through formal instruction the bibliographic resources relevant to his or her research. Certainly, in early 2004 such a person would have had access to a vast array of long-established print resources in electrical engineering as well as to a rich set of online resources providing indexing information, abstracts, and full text services for such references, including those that relate to lighting fixtures.

35. Based on my experience working in research libraries with researchers having the qualifications described above, or even lesser qualifications, it is my opinion that such researchers would have been able to locate the material discussed herein on their own or with the assistance of a research librarian with relative ease using the tools and resources described herein.

V. PUBLICATION

A. Document 1: Exhibit 1008, "Reducing the Computations of the Singular Value Decomposition Array Given by Brent and Luk" by B. Yang and J. F. Böhme ("Yang")

36. I have reviewed Exhibit 1008 to the related petition, which is a journal article titled "Reducing the Computations of the Singular Value Decomposition Array Given by Brent and Luk" by B. Yang and J. F. Böhme (hereafter "Yang"). Yang. The Yang article was published in volume 12, issue 4 of the *SIAM Journal on Matrix Analysis and Applications*. Attached hereto as Attachment A is a true and correct copy of the cover, publication date, title, and complete text of Yang, which

is available in the Kurt F. Wendt Engineering Library at the University of Wisconsin – Madison. I personally retrieved the Yang article that is Attachment A. In comparing Attachment A with Exhibit 1008, it is my opinion that Ex. 1008 is a true and correct copy of the Yang article. Specifically, the text of the article is complete; no pages are missing, and the text on each page appears to flow seamlessly from one page to the next; further, there are no visible alterations to the document.

37. Attached hereto as Attachment B is a true and correct copy of the MARC record for the *SIAM Journal on Matrix Analysis and Applications* for the Kurt F. Wendt Engineering Library at the University of Wisconsin – Madison online catalog. The library ownership is indicated by the presence of the library's code ("GZM") in field 049. The library continues to update and enhance the MARC record to meet current cataloging rules. The most recent enhancement to Attachment B occurred on April 17, 2015, as shown in field 005 ("20150417"). I personally retrieved the MARC record that is Attachment B.

38. As noted in the holdings information (362 field), the Kurt F. Wendt Engineering Library at the University of Wisconsin – Madison has received the *SIAM Journal on Matrix Analysis and Applications* from January 1988 and continues to receive the publication. In view of the MARC record for Attachment A, the Yang article was publicly available on or shortly after September 26, 1991, as shown by the stamp on the cover. The stamp has the appearance of those typically

used to indicate ownership and receipt which indicates that the specific issue had been received, cataloged, and indexed in the Kurt F. Wendt Engineering Library at the University of Wisconsin – Madison and made part of its online catalog database. Based on finding a print copy of the Yang article in the Kurt F. Wendt Engineering Library at the University of Wisconsin – Madison in view of a MARC record in its online library catalog attached as Attachment B, it is my opinion that the Yang article published in the *SIAM Journal on Matrix Analysis and Applications* was publicly available on or shortly after September 26, 1991.

39. Attachment B includes an entry in field 050 ("QA188 $b .S53")—as described above, a subject matter classification number consistent with the Library of Congress classification system (analogous to the Dewey Decimal classification system) and an entry in field 082 ("512.9/434/05"), a subject matter consistent with the Dewey Decimal classification system. Attachment B also shows that the Yang article was catalogued with two descriptor terms reading "Matrices $v Periodicals" (see Attachment C, Library of Congress subject heading sh85082210 and Attachment D, Library of Congress subject heading sh85099890) and "Mathematics $v Periodicals" (see Attachment E, Library of Congress subject heading sh85082151) in the 650 fields. I personally identified and retrieved Attachments C, D, and E.

40. Further, attached hereto as Attachment F is a true and correct copy of

the MARC record for the *SIAM Journal on Matrix Analysis and Applications* obtained from the OCLC bibliographic database. As previously noted, the library that created the record is recorded in field 040 with a unique library code. For Attachment F, that library code is "NSD" which means that the MARC record for this serial was cataloged as part of the National Serials Data Program at the Library of Congress. As can be seen in the "Entered" field in the MARC record for this exhibit, a cataloger at the Library of Congress created OCLC record number 16655630 on September 9, 1987, as shown in the "Entered" field ("19870909"). The library continues to update and enhance this MARC record to meet current cataloging rules. The most recent enhancement to Attachment F occurred on February 8, 2019, as shown in the "Replaced" field ("20190208"). I personally identified and retrieved the MARC record that is Attachment F.

41. The "BLvl" entry in Attachment F is "s," which indicates that the *SIAM Journal on Matrix Analysis and Applications* is a serial publication. Field 310 of Attachment 1E reads "Quarterly." Accordingly, the MARC record for Exhibit A corresponds to the *SIAM Journal on Matrix Analysis and Applications* from the time the serial title adopted the current title and includes the date of the Yang article.

42. Attachment F includes an entry in field 050 ("QA188 $b .S53")—as described above, a subject matter classification number consistent with the Library of Congress classification system (analogous to the Dewey Decimal classification

system) and an entry in field 082 ("512.9/434/05"), a subject matter consistent with the Dewey Decimal classification system. Attachment F also shows that the Yang article was catalogued with two descriptor terms reading "Matrices $v Periodicals" (see Attachment C, Library of Congress subject heading sh85082210 and Attachment D, Library of Congress subject heading sh85099890) and "Mathematics $v Periodicals" (see Attachment E, Library of Congress subject heading sh85082151) in the 650 fields.

43. Thus, as of its cataloging, the publication corresponding to the MARC record attached hereto as Attachment F was indexed according to its subject matter by virtue of at least three independently sufficient classifications: the field 050 entry, the field 082 entry, and the field 650 entries. As of September 9, 1987, the MARC record attached hereto as Attachment F was accessible through any library with access to the OCLC bibliographic database or the online catalog at a library that subscribed to the serial, which means that the corresponding publication was publicly available on or before that same date through any library with access to the OCLC bibliographic database or through an individual library.

44. Attachment F indicates that the *SIAM Journal on Matrix Analysis and Applications* as cataloged at the Library of Congress is currently available from 328 libraries. In view of the above, this issue of the *SIAM Journal on Matrix Analysis and Applications* was publicly available on or shortly after September 26, 1991,

because by that date it had been cataloged and indexed at the Library of Congress, made part of the OCLC bibliographic database, and received in the Kurt F. Wendt Engineering Library at the Univrsity of Wisconsin – Madison. For these reasons, it is my opinion that Exhibit 1008 to the petition was published and accessible to the public on or shortly after September 26, 1991.

VI. CONCLUSION

45. In signing this declaration, I recognize that the declaration will be filed as evidence in a case before the Patent Trial and Appeal Board of the United States Patent and Trademark Office. I also recognize that I may be subject to cross-examination in the case and that cross-examination will take place within the United States. If cross-examination is required of me, I will appear for cross-examination within the United States during the time allotted for cross-examination.

46. I hereby declare that all statements made herein of my own knowledge are true and that all statements made on information and belief are believed to be true.

Dated: September 21, 2023

Respectfully submitted,

Sylvia Hall-Ellis, Ph.D.

Appendix A

CURRICULUM VITAE SYLVIA D. HALL-ELLIS

EDUCATION

Ph.D., University of Pittsburgh, Pittsburgh, Pennsylvania, 1985
M.P.S., University of Denver, Denver, Colorado, 2014
Post Graduate Studies, University of Texas – San Antonio, Texas, 1975-1976
M.L.S., University of North Texas, Denton, Texas, 1972
B.A., Rockford University, Rockford, Illinois, 1971

PROFESSIONAL EXPERIENCE

1981- **Consultant for higher education, non-profit organizations, and corporations.**

2002- **Adjunct Professor, School of Information, San José State University, San José, California.** Serve as part-time faculty member teaching graduate students in technical services (cataloging, bibliographic control, classification), "core courses," and special topics.

2014-2016 **Director, Grants and Resource Development, Colorado Community College System.** Provided leadership and vision to foster the continued growth of rigorous scholarship, innovative projects, and creative work for statewide system, 13 campuses, and 50 teaching sites serving 155,000 students. Responsible for leadership and ensured efficient functioning of contract and grants in compliance with state & federal requirements and successful implementation and management. Served as a subject matter expert and liaison for college Grant Directors for all issues relating to grants and subcontracts.

2010-2014 **Senior Grant Administrator, Morgridge College of Education, University of Denver (Colorado).** Provided leadership and vision to foster continued growth of rigorous scholarship, innovative research, and creative work in the Morgridge College of Education. Ensure that contract and grants processes function effectively and efficiently for 60 faculty and researchers with a focus on the successful progression and efficient management of grants totaling $13M. Worked effectively and collegially with Department Chairs and Program Coordinators on operational grant-related management activities and with a broad range of internal and external constituencies. Supported the dissemination and promotion of faculty research and scholarship to outside constituents at conferences and through publications. Assisted Principal Investigators and grant project teams by coaching, mentoring, and financial management.

2011-2013 **Interim Director & Assistant Dean, Westminster Law Library, Sturm College of Law, University of Denver.** Planned, organized, and directed all administrative activities for the library serving students, faculty, and alumni; oversaw the employment, retention, promotion, transfer and termination of library personnel; represented the library at professional conferences and public meetings; created and promoted a climate and culture of acceptance for new programs and services, a positive high-quality image of the law library, and that reflect the organization's values, encourage excellent performance, and reward high productivity and innovation; provided leadership and set strategic direction of the organization; ensured that the library provided excellent customer service through solution-oriented staff response to patron needs and by responsiveness and continuous improvement of the organization; promoted, developed, and maintained positive working relationships with colleagues and customers including key stakeholders and groups, higher education institutions, the legal community, other regional libraries and districts statewide, and national library organizations.

2007-2014 **Associate Professor, Library & Information Science, Morgridge College of Education, University of Denver (Colorado).** Served in leadership role and worked collaboratively in program, college, campus and community environments. Advised and supervised students, taught core and specialized courses at the graduate level in an integrative, student-centered learning environment. Served on LIS, College, and University committees, and maintained working relationships with colleagues in other academic units and information professionals in the Rocky Mountain region and beyond. Served on and chair doctoral student dissertation committees. Oversaw and facilitated the College and LIS graduate student association.

2002-2007 **Assistant Professor, Library & Information Science, College of Education, University of Denver (Colorado).** Served as tenure-track faculty member teaching graduate students in "core courses," resource description and access, service learning, and independent studies. Advised graduate students, participate on LIS and College committees, and serve on doctoral student dissertation committees. Oversaw and facilitated the LIS graduate student association and alumni association.

2000-2002 **Affiliate Faculty, Library & Information Science, College of Education, University of Denver (Colorado).** Served as part-time faculty member teaching graduate students in technical services (cataloging, bibliographic control, classification), "core courses," and special topics. Oversaw and facilitated the LIS graduate student association and alumni association.

2000-2001 **Special Assistant to the Secretary's Regional Representative, U.S. Department of Education, Region VIII, Denver, Colorado.** Served as the principal advisor and representative of the U. S. Secretary of Education's Regional Representative (SRR). Ensured the implementation of major goals of the SRR and the Secretary. Provided leadership on behalf of the SRR in contacts with high-level officials in Region VIII requiring sensitive policy interpretation in communication with senior Department officials to solve problems and resolve issues raised by State and local education officials. Served as the primary contact for School-to-Work/Career, Children's Health Insurance Program, and Safe and Drug-Free Schools. Delivered technical assistance to local education agencies and institutions of higher education in technology, professional development, and school construction.

1999-2000 **Catalog Librarian, Jefferson County Public Library, Lakewood, Colorado.** Performed original, copy cataloging and classification of library materials (English and Spanish) using standard library protocols; completed original descriptive cataloging and subject analysis; enhanced brief catalog and authority records in III.

1997-1999 **Development Officer, McREL International, Aurora, Colorado.** Served as senior member of corporate management team in strategic planning, development of proposals and contracts, implementation, and evaluation of new services, products, and programs for educational agencies. Provided creative leadership to corporate committees to solicit ideas, identify goals and objectives, plan, develop, present, and evaluate professional development opportunities.

1995-1997 **Education Specialist, Education Service Center, Region One, Edinburg, Texas.** Served as member of Administrative Cabinet team in strategic planning, development of proposals and contracts, implementation, and evaluation of telecommunications capabilities, services, products, and programs for 40 school districts serving 283,000 students in 7 counties. Provided creative leadership to regional and state committees to solicit ideas, identify strategic goals and objectives, plan, develop, present, and evaluate funding opportunities and professional development for 400 librarians.

1993-1996 **Assistant Professor of Library Science, Sam Houston State University, Huntsville, Texas.** Served a faculty member teaching 400 graduate students in technical services (cataloging, bibliographic control, classification), automation, and networking. Participated in distance education program and coordinated annual conference. Conducted university and Texas Library Association-funded field research focused on library collection development and academic achievement.

1992-1993 **Head Librarian, Rocky Mountain College of Art & Design, Denver, Colorado.** Responsible for the daily operation, selection and acquisition of materials, formulation of policies for library operations, media center, and photography/slides archives. Designed and implemented library automation and delivery of electronic resources to college community.

1981-1985 **Development Officer, PRLC, Inc., Pittsburgh, Pennsylvania.** Served as senior member of corporate management team in strategic planning, development of proposals and contracts, implementation, and evaluation of new services, products, and programs for 100 institutional member organizations. Coordinated the development of proposals and contracts totaling $4,000,000 annually. Provided creative leadership to corporate committees to solicit ideas, identify goals and objectives, plan, develop, present, and evaluate professional development opportunities.

1981 **Director of Library Development, Pennsylvania Department of Education, Harrisburg, Pennsylvania.** Responsible for statewide development, technical assistance, professional development, resource sharing, children's services, institutional library services, networking, and state aid program for all libraries throughout the Commonwealth. Functioned as liaison to Governor's Advisory Council, LSCA Advisory Council, District Administrators, private colleges, universities, consortia managers, and network directors. Supervised $14,000,000 formula-based state aid program and $3,000,000 grant awards to individual libraries, consortia, and networks.

1978-1981 **Assistant Director, Southern Tier Library System, Corning, New York.** Coordinated operation of system-wide programs (technical assistance, professional development, resource sharing, technical services, outreach) to 40 public libraries in 5 counties serving 500,000 residents. Solicited ideas, identified goals, sponsored, and evaluated professional development opportunities and technical assistance sessions.

1976-1978 **Division Librarian for Technical Services, Corpus Christi Public Libraries, Corpus Christi, Texas.** Provided leadership in acquisitions, cataloging, serials control, and processing for main library and 4 branches serving 250,000 residents. Participated as senior member of library management team. Compiled and prepared technical evaluations, reports, and statistical analyses of Division operations to measure the achievement and cost of annual goals, objectives, and staff performance.

1975-1976 **System Coordinator, San Antonio Major Resource Center, San Antonio, Texas.** Served as senior member of the management team for District X Office, charged to provide technical assistance, resource sharing, media services, and professional development to librarians and staff representing 30 public library jurisdictions in 21 counties serving 1,500,000 residents. Functioned as liaison to System Director, staff, and members of governing bodies with the System Board of Directors and the Texas State Library and Historical Commission. Prepared LSCA grant applications and monitored awards totaling $1,100,000 annually.

1973-1975 **Bilingual Branch Librarian, San Antonio Public Library, San Antonio, Texas.** Worked as librarian providing reference, information, and readers' advisory services in branch serving 50,000 Spanish-speaking residents in southwest San Antonio. Participated in collection development and resource acquisition activities, specializing in children's work, Spanish language resources, and multicultural studies.

1972-1973 **Librarian, Holding Institute, Laredo, Texas.** Worked as high school librarian serving 500 boarding students in Spanish-speaking environment of private school. Provided reference, research assistance, and library instruction to students and 35 faculty members.

1966-1971 **Rockford Public Library, Rockford, Illinois.** Worked in branches as part-time as a Library Assistant, Clerk, and Page in city library serving 150,000 residents.

PUBLICATIONS

Editor-reviewed Monographs (Completed and in Progress)

Hall-Ellis, Sylvia D., and Mary Beth Weber. *Contemporary Cataloging in an RDA Environment: A Handbook for Students and Practitioners.* Chicago, IL: American Library Association. Under contract & In development.

RDA Testing: Lessons Learned and Challenges Revealed. Sylvia D. Hall-Ellis and Robert O. Ellett, Jr., eds. Binghamton, N.Y.: Haworth, 2012. 128 p.

Hall-Ellis, Sylvia D., Stacey L. Bowers, Christopher D. Hudson, and M. Claire Williamson. *Librarian's Handbook for Seeking, Writing, and Managing Grants.* Santa Barbara, Calif.: Libraries Unlimited, 2011. 315 p.

Hall-Ellis, Sylvia D., with Ann Jerabek, and Merrie W. Valliant. *Contemporary Cataloging: A Handbook for Practitioners and Students.* Open access text. Athens, GA: University of Georgia System Regents, 2011. 767 p.

Grealy, Deborah S. and Sylvia D. Hall-Ellis. *From Research to Practice: The Scholarship of Teaching and Learning in LIS Education.* Westport, Conn.: Libraries Unlimited, 2009. 175 p.

Hall-Ellis, Sylvia D. with J. Ann Jerabek. *Grants for School Libraries.* Westport, Conn.: Libraries Unlimited, 2003. 197 p.

Hall-Ellis, Sylvia D., Doris Meyer, Frank W. Hoffmann, with J. Ann Jerabek. *Grant Writing for Small Libraries and School Library Media Centers.* Boulder, Colo.: NetLibrary, 2001. 173 p.

Hall-Ellis, Sylvia D., Doris Meyer, Frank W. Hoffmann, with J. Ann Jerabek. *Grant Writing for Small Libraries and School Library Media Centers.* Englewood, Colo: Libraries Unlimited, 2000. 173 p.

Editor-reviewed Chapters (Completed and In Progress)

Hall-Ellis, Sylvia D. "Prepared to Lead: Talent, Skills, and Competencies." In *Telling the Technical Services Story*. Chicago, IL: American Library Association, 2020. Program Presentation for Re-Accreditation by the American Library Association, School of Information, San Jose State University, 2022.

Hall-Ellis, Sylvia D. "Grant Writing and Sponsored Research Funding for Academic Librarians." In *The New Librarianship.* Vol. 4. Bradford Lee Eden, ed. New York: Scarecrow Press, 2015. (pp. 163-174)

Hall-Ellis, Sylvia D. "Organizing Information: Technical Services." In *Information Services Today: An Introduction.* Sandra Hirsch, ed. Lantham, Md.: Rowman and Littlefield, 2015. (pp. 139-148)

Hall-Ellis, Sylvia D. "Metadata, MARC, and More." In *Rethinking Technical Services, Considering Our Profession and Ourselves: What's the Future of Our Profession?* Mary Beth Weber, ed. Lantham, Md.: Rowman and Littlefield, 2015. (pp. 29-55)

Hall-Ellis, Sylvia D., ed. "Contingent Faculty: Non-Tenure Track Faculty Series." In the *Faculty Personnel Guidelines Relating to Appointment, Promotion, and Tenure.* November 2011. Denver, Colo.: University of Denver, 2011. 42 p.

Hall-Ellis, Sylvia D., ed. "Standard VII: Information Resources." In the *Sturm College of Law Self-Study Presentation for Accreditation by the American Bar Association.* Denver, Colo.: University of Denver, Sturm College of Law, 2011. 20 p.

Hall-Ellis, Sylvia D. "Applying for Grants from Foundations, Corporations, or Government." In *The Volunteers' Guide to Fundraising: Raise Money for Your School Team, Library or Community Group.* 1st ed. Ilona M. Bray, ed. Berkeley, Calif.: Nolo, 2011. (pp. 1-38 on accompanying disc)

Hall-Ellis, Sylvia D., ed. "Standard III: The Faculty." In the *Library and Information Science Program Self-Study Document for Accreditation by the American Library Association.* Denver, Colo.: University of Denver, Morgridge College of Education, 2010. 22 p.

Hall-Ellis, Sylvia D. "Library and Information Science Programs and Education for Catalogers and Metadata Specialists: Challenges for the Twenty-first Century." In *Conversations with Catalogers in the Twenty-First Century.* Elaine R. Sanchez, ed. Santa Barbara, Calif.: ABC-Clio, 2010. (pp. 226-254)

Hall-Ellis, Sylvia D., ed. "Standard III: The Faculty." In the *Library and Information Science Program Self-Study Document for Accreditation by the American Library Association.* Denver, Colo.: University of Denver, College of Education, 2003. 15 p.

Lesesne, Teri S. and Sylvia D. Hall-Ellis. "The Selection, Evaluation, and Integration of Culturally Authentic Texts: A Case for Making the Online Catalog Reflect Parallel Cultures." In *Literacy: Traditional, Cultural, Technological.* Pittsburgh, Pa.: International Association of School Librarianship, 1995. (pp. 110-113)

Lesesne, Teri S. and Sylvia D. Hall-Ellis. *The Selection, Evaluation, and Integration of Culturally Authentic Texts: A Case for Making the Online Catalog Reflect Parallel Cultures.* In *Conference Proceedings* of the 23rd Annual International Association of School Librarianship, Pittsburgh, Pennsylvania, July 17-22, 1994. ERIC Document ED374816. 17 p.

Hall-Ellis, Sylvia D. "Curriculum Folio for School Library Media Specialist Programs." In the *National Council for Accreditation of Teacher Education Self-Study for Sam Houston State University.* Huntsville, Tex.: Sam Houston State University, College of Education and Applied Science, 1994. 25 p.

Bruntjen, Scott and Sylvia D. Hall. "Attempting to Automate: Lessons Learned Over Five Years." In *Advances in Library Administration*. Volume 4. Weston, Conn.: JAI Press, 1985. (pp. 177-192)

Peer-Reviewed Journal Articles (Completed and In Progress)

Hall-Ellis-Sylvia D. "Job Design for Cataloging and Metadata Librarians." Submitted to *Journal of Library Administration.* In progress.

Hall-Ellis, Sylvia D. "The Relationship of Situational Leadership and the Dreyfus Model of Skill Acquisition for Supervisors in Cataloging and Metadata Services." To be submitted to *Library Resources and Technical Services.* In progress.

Hall-Ellis, Sylvia D. *The Relationship of Core Competencies on Learning Outcomes and Employers' Expectations for Catalog Librarians and Metadata Specialists.* To be submitted to the *Journal of Education for Library and Information Science.* In progress.

Hall-Ellis, Sylvia D. "Building Cataloger Competencies: The Dreyfus Model as a Prototype for the Education and Professional Development of Catalog Librarians and Metadata Specialists in Bibliographic Control." To be submitted to the *Cataloging & Classification Quarterly.* In progress.

Hall-Ellis, Sylvia D. "Descriptive Impressions of Entry-Level Cataloger and Metadata Specialists Positions, 2000-2016: Reflections and Trends." To be submitted to *Library Resources and Technical Services.* In progress.

Hall-Ellis, Sylvia D. "Competencies for Metadata and Cataloging Leaders: What Employers Expect as Reflected in Position Descriptions, 2000-2016." *Cataloging & Classification Quarterly.* In progress.

Hall-Ellis, Sylvia D. "Stackable Micro-credentials – A Framework for the Future." *The Bottom Line 29*, no. 4 (April 2016), http://www.emeraldinsight.com/doi/pdfplus/10.1108/BL-02-2016-0006
Ellis, Sylvia D. "Succession Planning and Staff Development – A Winning Combination." *The Bottom Line*, 28 no. 3 (May 2015): 95-98.

Hall-Ellis, Sylvia D. "Succession Planning and Staff Development – A Winning Combination." *The Informed Librarian Online* (September 2015), http://www.informedlibrarian.com/featuredArticle.cfm?FILE=succession_1509.pdf

Hall-Ellis, Sylvia D. "Nudges and Decision Making: A Winning Combination." *The Bottom Line 28*, no. 4 (July 2015): 133-136.

Hall-Ellis, Sylvia D. "Succession Planning and Staff Development – A Winning Combination." *The Bottom Line 28*, no. 3 (May 2015): 95-98.

Hall-Ellis, Sylvia D. "Metadata Competencies for Entry-Level Positions: What Employers Expect as Reflected in Position Descriptions, 2000-2013." *Journal of Library Metadata 15*, no. 2 (June 2015): 102-134.

Hall-Ellis, Sylvia D. "Onboarding to Improve Library Retention and Productivity." *The Bottom Line 27*, no. 4 (October 2014).

Hall-Ellis, Sylvia D. "Accept, Coach, and Inspire: A Formula for Success." *The Bottom Line 27*, no. 3 (July 2014): 103-106.

Hall-Ellis, Sylvia D. *Reward Systems for Staff in Higher Education Institutions: Case Studies of 15 Higher Education Institutions in Colorado.* Capstone Thesis. Denver, Colo.: University of Denver, University College, 2014.

Hall-Ellis, Sylvia D. "Reward Systems Promote High-Performance Work Teams Achieving Library Mission." *The Bottom Line 27*, no. 2 (April 2014): 66-69.

Hall-Ellis, Sylvia D. "Investment in Staff Development for Seeking External Grant Funds." *The Bottom Line 27*, no. 1 (January 2014): 22-25.

Hall-Ellis, Sylvia D. "Staff Investments for High Performance Teams." *The Bottom Line 26*, no. 4 (October 2013): 149-152.

Hall-Ellis, Sylvia D. and Deborah S. Grealy. "Service Learning in LIS Education: A Case for Holistic Assessment." *Catholic Library World* 82, no. 3 (March 2012): 178-187.

Hall-Ellis, Sylvia D., and Deborah S. Grealy. "The Dreyfus Model of Skill Acquisition: A Career Development Framework for Succession Planning and Management in Academic Libraries." *College and Research Libraries* (June 2012). http://crl.acrl.org/content/early/2012/06/19/crl12-349.full.pdf+html

Hall-Ellis, Sylvia D. "Cataloger Competencies…What Do Employers Require?" *Cataloging & Classification Quarterly* 46, no. 3 (2008): 305-330. http://ccq.haworthpress.com/doi:10.1080/01639370802034565

Hall-Ellis, Sylvia D. "Subject Access for Readers' Advisory Services: Their Impact on Contemporary Spanish Fiction in Selected Public Library Collections." *Public Library Quarterly* 27, no.1 (2007): 1-18. http://plq.haworthpress.com/doi:10.1080/01616840802122377

Hall-Ellis, Sylvia D. "Language Proficiencies among Catalogers and Technical Services Librarians." *Technical Services Quarterly* 25, no. 2 (2007) 31-47. http://tsq.haworthpress.com/doi:10.1300/J124v25n02_03

Hall-Ellis, Sylvia D. "Cataloging Electronic Resources & Metadata: Employers' Expectations as Reflected in *American Libraries and AutoCAT,* 2000-2005." *Journal of Education for Library and Information Science* 47, no. 1 (2006): 38-51.

Hall-Ellis, Sylvia D. "Descriptive Impressions of Managerial & Supervisory Cataloger Positions as Reflected in *American Libraries, AutoCAT,* and the *Colorado State Library Jobline,* 2000-2004: A Content Analysis of Education, Competencies, and Experience." *Cataloging & Classification Quarterly* 42, no. 1 (2006): 55-88.

Hall-Ellis, Sylvia D. "Descriptive Cataloging Proficiencies among Beginning Students: A Comparison among Traditional and Virtual Class Students." *Journal of Library & Information Services in Distance Education* 2, no. 2 (2005): 13-44.

Hall-Ellis, Sylvia D. "Descriptive Impressions of Entry-Level Cataloger Positions as Reflected in *American Libraries, AutoCAT,* and the *Colorado State Library Jobline,* 2000-2003." *Cataloging & Classification Quarterly* 40, no. 2 (2005): 33-72.

Hall-Ellis, Sylvia D. and Mary Ann Berry. "The Impact of Library Resource Centers on Academic Achievement in Selected Public Schools in South Texas: Preliminary Findings." *Texas Library Journal* 71, no. 2 (Summer 1995): 94-97.

Hall-Ellis, Sylvia D. "Visual Arts as Foundation for Successful Library Automation: The Rocky Mountain College of Art & Design Experience." *Art Reference Serials Quarterly* 4 (1994): 43-54.

Hall, Sylvia D. *High School Databases: An Examination of Bibliographic Data Elements*. Dissertation. Pittsburgh, Pa.: University of Pittsburgh, School of Library and Information Science, 1985.

Technical Reports

Hall-Ellis, Sylvia D. *Preparing Catalogers and Metadata Specialists Through Competency-Based Education: The San José State University iSchool Experience.* Report for the 2021 Re-Accreditation Program Presentation to the American Library Association. San José, Calif.: San José State University iSchool, 2020.

Hall-Ellis, Sylvia D. *Colorado Community College System Grant Handbook.* Denver, Colo.: Colorado Community College System, 2015.

.

Faculty Voices: Testimonials from the Frontiers of a Development Education Redesign. Elaine DeLott Baker, Marilyn Smith, and Sylvia D. Hall-Ellis, eds. Denver, Colo.: Colorado Community College System, 2014.

Lewis, Melanie, Jamie M. Van Leeuwen, and Sylvia D. Hall-Ellis. *Project Homeless Connect 7 Event Evaluation.* Denver, Colo.: University of Colorado Denver, 2009.

Hall-Ellis, Sylvia D. *Grant Writing Tips and Resources.* Denver, Colo.: University of Denver, 2008-2014. http://portfolio.du.edu/grants

Hall-Ellis, Sylvia D. and Duan Zhang. *Project Homeless Connect 6 Event Evaluation.* Denver, Colo.: Center for Community Engagement and Service Learning, 2008.

Hall-Ellis, Sylvia D. *Strategic Plan for Denver Medical Library System: Final Report.* Denver, Colo.: HealthONE and Denver Medical Library, 2008.

Hall-Ellis, Sylvia D. and Duan Zhang. *Project Homeless Connect 5 Event Evaluation.* Denver, Colo.: Center for Community Engagement and Service Learning, 2008.

Hall-Ellis, Sylvia D. *Strategic Plan for Denver Medical Library System: Phase Two Report.* Denver, Colo.: HealthONE and Denver Medical Library, 2007.

Hall-Ellis, Sylvia D. and Duan Zhang. *Project Homeless Connect 4 Event Evaluation.* Denver, Colo.: Center for Community Engagement and Service Learning, 2007.

Hall-Ellis, Sylvia D. *Strategic Plan for Denver Medical Library System: Phase One Report.* Denver, Colo.: HealthONE and Denver Medical Library, 2007.

Hall-Ellis, Sylvia D. *Denver Public Library: Opportunities for Change.* Denver, Colo.: University of Denver, Colorado Community-Based Research Network & Metropolitan Organization of People, 2005.

Hall-Ellis, Sylvia D. *Resources in Grant Writing for Colorado Schools and Libraries.* Sponsored by the Colorado Department of Education, Educational Telecommunications Unit, 1999. Revised September 2000.

Hall-Ellis, Sylvia D. *Lewis & Clark Fellows Concept Paper for the Bicentennial Commemoration.* Vancouver, Wash.: Lewis and Clark Bicentennial Council, 1998.

Hall-Ellis, Sylvia D. and Mary Ann Berry. *The Impact of Library Resource Centers on Academic Achievement in Public Schools in Texas: The Final Report.* Prepared under the sponsorship of the Research Enhancement Fund award from Sam Houston State University, the Texas Association of School Librarians, the Children's Services Round Table, and the Young Adults' Services Round Table. Huntsville, Tex.: Sam Houston State University, College of Education and Applied Science, 1997.

Hall-Ellis, Sylvia D. *The Impact of Library Resource Centers on Academic Achievement in Selected Public Schools in Texas.* Huntsville, Tex.: Sam Houston State University, College of Education and Applied Science, 1997.

Hall-Ellis, Sylvia D. *Planning for Educational Technology: the Distance Education Implementation Phase: An Investigation of Technology and Telecommunication Needs for Region One Education Service Center, South Texas Community College, TCI Cablevision of South Texas, Inc., Tech Prep of the Rio Grande Valley, Inc., Texas State Technical College, Centro Cultural en el Valle de Texas, McAllen Independent School District, Harlingen Consolidated Independent School District, Donna Independent School District, Edinburg Consolidated Independent School District, La Joya Independent School District, Mercedes Independent School District, Pharr-San Juan-Alamo Independent School District, Sharyland Independent School District, Easter Seal Society of the Rio Grande Valley, Inc., and McAllen Memorial Library.* Harlingen, Tex.: Tech Prep of the Rio Grande Valley, 1996.

Hall-Ellis, Sylvia D. "Barcodes for the Texas Library Connection." Prepared under the sponsorship of the Office of Technology Services, Texas Education Agency. Austin, Tex.: TENET News and Conferences, March 1995.

Hall-Ellis, Sylvia D. *[et. al.] Planning for Educational Technology: A Study of Future Technology Needs for the Donna Independent School District, Region One Education Region Service Center, Tech Prep of the Rio Grande Valley, Inc. South Texas Community College, and the Department of Library Science, Sam Houston State University.* Research team: Sylvia D. Hall-Ellis, Ruth Ann Riggins, Noe Torres, Patricia G. Bubb, and Michael D. Bell. Harlingen, Tex.: Tech Prep of the Rio Grande Valley, 1994. Funded through a grant award from the Texas Education Agency.

Hall-Ellis, Sylvia D. and Mary Ann Berry. *The Impact of Library Resource Centers on Academic Achievement in Selected Public Schools in South Texas.* Huntsville, Tex.: Sam Houston State University, College of Education and Applied Science, 1993. Funded through a grant award from the Sam Houston State University Research Enhancement Fund.

Hall-Ellis, Sylvia D., Alice Krueger, and Linda Brannan. *Thesaurus Development for National Curriculum Materials Database at the Eisenhower National Clearinghouse for Mathematics and Science Education, Columbus, Ohio.* Developed under the sponsorship of Mid-Continent Regional Educational Laboratory Corporate Library, Aurora, Colo. Washington, D.C.: National Science Foundation; Columbus, Ohio: ERIC Clearinghouse for Mathematics and Science Education, 1993.

Hall-Ellis, Sylvia D. and Clarence L. Coffindaffer. *Partners in Progress: The 1992 Montana Library Federation Study Final Report*. Helena, Mont: Montana State Library and The Blue Bear Group, Inc., 1992.

Hall-Ellis, Sylvia D. and Clarence L. Coffindaffer. *Montana Federation Study Identification Paper*. Denver, Colo.: The Blue Bear Group, Inc., 1992.

Bruntjen, Scott and Sylvia D. Hall. *Recommendations on the Development of System-Wide Efforts of the Northern Waters Library Service.* Ashland, Wisc.: Northern Waters Library Service and The Blue Bear Group, Inc., 1989.

Hall, Sylvia D. *The Iowa Union List of Serials as A Part of The Iowa Locator: Planning Document*. Des Moines, Ia.: State Library of Iowa, 1988.

Hall, Sylvia D. *Iowa Computer-Assisted Network (ICAN Users' Manual. IBM Compatible Edition: Version 7.0.* Des Moines, Ia.: State Library of Iowa, 1988.

Hall, Sylvia D. *Iowa Computer-Assisted Network (ICAN Users' Manual. IBM Compatible Edition: Version 5.0.* Des Moines, Ia.: State Library of Iowa, 1986.

Hall, Sylvia D. *Iowa Computer-Assisted Network (ICAN Users' Manual. Apple MacIntosh Edition: Version 5.0.* Des Moines, Ia.: State Library of Iowa, 1986.

Bruntjen, Scott and Sylvia D. Hall. *The District of Columbia Public Library Planning for Retrospective Conversion of Bibliographic Records and Automation Issues for the 1990's: Final Report*. Central City, Colo.: The Blue Bear Group, Inc., 1986.

Bruntjen, Scott and Sylvia D. Hall. *The Iowa Locator: Final Report.* Central City, Colo.: The Blue Bear Group, Inc., 1986.

Bruntjen, Scott and Sylvia D. Hall. *Discovering Resource Sharing Treasures: Accessing Pennsylvania's High School Library Collections*. Harrisburg, Pa.: State Library of Pennsylvania, Bureau of School Library Media Resources, 1985.

Hall, Sylvia D. *Retrospective Conversion and the Completeness of Cataloging in Pennsylvania High School Libraries.* Pittsburgh, Pa.: PRLC, Inc., 1985.

Bruntjen, Scott and Sylvia D. Hall. *The Iowa Locator.* Des Moines, Ia.: State Library of Iowa, 1985- http://www.statelibraryofiowa.org/ld/silo/locator

Bruntjen, Scott and Sylvia D. Hall. *ICAN Analysis*. Des Moines, Ia.: State Library of Iowa, 1985.

Bruntjen, Scott and Sylvia D. Hall. *Zebras: Bar Codes, Standards, and Library Automation*. Central City, Colo.: The Blue Bear Group, Inc., 1985.

Hall, Sylvia D. and Scott Bruntjen. *Access Pennsylvania.* Harrisburg, Pa.: State Library of Pennsylvania, 1984- http://www.accesspa.org

Hall, Sylvia D. *Reconfiguration of the ITAC Cataloging Data Base to Machine Readable (MARC) Format*. Classified Document. Arlington, Va.: U. S. Army Intelligence and Threat Analysis Center, 1984.

Bruntjen, Scott and Sylvia D. Hall. *South Dakota Library Automation Plan: Final Report*. Pittsburgh, Pa.: PRLC, Inc., 1982. Reprinted by the South Dakota State Library, 1983.

Bruntjen, Scott and Sylvia D. Hall. *Altoona Automation Plan: Final Report prepared for the Altoona Area Public Library and the Altoona District Library Center*. Pittsburgh, Pa.: PRLC, 1983.

Bruntjen, Scott, Sylvia D. Hall and Paul J. Pugliese. *College Space Utilization Study*. Pittsburgh, Pa.: PRLC, Inc., 1983.

Hall, Sylvia D. *Pennsylvania Public Library Film Center Union Catalog Cataloging and Technical Services Procedures Manual*. Pittsburgh, Pa.: PRLC, Inc., 1982.

Hall, Sylvia D. *History of Library Development in Pennsylvania: A Review and Content Analysis of the Plans, 1955-1980*. Pittsburgh, Pa.: PRLC, Inc., 1982.

Hall, Sylvia D. *Newspapers on Microfilm: A Listing of Newspapers in Allegheny, Chemung, Schuyler, Steuben, and Yates Counties*. Ithaca, N.Y.: South Central Reference and Research Council, 1981.

Hall, Sylvia D. *OCLC/ILL Subsystem at Southern Tier Library System.* Albany, N.Y.: SUNY/OCLC Network, 1980.

Hall, Sylvia D. *Retrospective Conversion for Major Public Libraries in South Central New York State: A Technical Report*. 2 vols. Corning, N.Y.: Southern Tier Library System, 1979-1980.

Hall, Sylvia D. *The Librarian and the Mexican-American Patron in Texas.* Austin, Tex.: Texas State Library, 1978.

Other Publications

Hall-Ellis, Sylvia D., ed. *Library and Information Science Program Self-Study Document for Accreditation by the American Library Association.* St. Paul, MN: St. Catherine University, 2017. 255 p.

Hall-Ellis, Sylvia D., and Robert O. Ellett, Jr., guest editors. *RDA Testing: Lessons Learned and Challenges Revealed: A Special Issue of Cataloging & Classification Quarterly* 49, no. 7-8 (November 2011).

Hall-Ellis, Sylvia D. and Robert O. Ellett, Jr. *Fundamentals of Cataloging I: An Online ALCTS Course.* Chicago, Ill.: American Library Association, 2009.

Hall-Ellis, Sylvia D., Angela J. Kinney and Martha Ann Bace, editors. *Best Practices in Cataloging Education Identified at the 2007 ALCTS Pre-conference: A Special Issue of the Journal for Library and Information Science Education* 49, no. 2 (Spring 2008).

Hall-Ellis, Sylvia D. *Cataloging Education: A New Emphasis for the Library and Information Science Curriculum.* Presentation delivered to the ALCTS Pre-conference, 132nd Annual Conference, American Library Association, Washington, D.C., June 22, 2007. http://www.loc.gov/aba/professional/

Hall-Ellis, Sylvia D. "*Cataloger Competencies: Do the Employers Require What the Professors Teach?*" Presentation delivered to the ALCTS CCS Heads of Cataloging Discussion Group, 131st Annual Conference, American Library Association, New Orleans, Louisiana, June 26, 2006. http://dlist.sir.arizona.edu/

Hall-Ellis, Sylvia D., guest editor, with Deborah S. Grealy, Clara L. Sitter, and Tassos Petrou. *Library Students' Voices in Colorado: An Issue of Colorado Libraries* 31:1 (Spring 2005).

Hall-Ellis, Sylvia D., ed. *Library and Information Science Program Self-Study Document for Accreditation by the American Library Association.* Denver, Colo.: University of Denver, College of Education, 2003. 125 p. with CD-ROM.

Hall-Ellis, Sylvia D. and Deborah S. Grealy, guest editors. *Library Education in Colorado: An Issue of Colorado Libraries* 29, no. 2 (Summer 2003).

Hall-Ellis, Sylvia D., ed. *Library and Information Science Program Self-Study Document for Accreditation by the American Library Association.* Denver, Colo.: University of Denver, College of Education, 2003.

Hall-Ellis, Sylvia D. "Adaptive Furniture for the ADA-Qualified: An Investigative Study." 2001. Unpublished manuscript.

Hall-Ellis, Sylvia D. "Cataloging Electronic Serials: A Study in User Access and Article Delivery." 2001. Unpublished manuscript.

Hall-Ellis, Sylvia D. "E-books: Acquisition and Circulation Issues in Public Libraries." 2001. Unpublished manuscript.

Hall-Ellis, Sylvia D. "Authority Control and Its Importance in School Library Media Online Catalogs." 1999. Unpublished manuscript.

Hall, Sylvia D. "Cooperation Improving Service in San Antonio System." *Texas Libraries* XXXVII (Spring 1976): 27-29.

Hall, Sylvia D. "Summer is Sea Monstrously Fun!" *Texas Library Journal* L (December 1974): 224-226.

Hall, Sylvia D. "A Brief Annotated Bibliography of Non-book Materials on the Mexican American." *Texas Library Journal* XLVIII (October 1972): 213-232.

Book Reviews

ALA Book of Library Grant Money. Ann Kepler, ed. 8th ed. Chicago, IL: American Library Association, 2011. 978-0-8389-1058-0, $175.00 [*Colorado Libraries,* June 2012]

Developing a Compensation Plan for Your Library. Paula M. Singer and Laura L. Francisco, comps. 2nd ed. Chicago, IL: American Library Association, 2009. 978-0-8389-0985-0, $57.00 [*Colorado Libraries,* March 2012]

Frugal Librarian. Carol Smallwood, ed. Chicago, IL: American Library Association, 2011. 978-0-83891-075-7, $42.00 [*Colorado Libraries,* February 2012]

Dowlin, Ken. *Getting the Money: How to Succeed in Fundraising for Public and Nonprofit Libraries.* Westport, Conn.: Libraries Unlimited, 2008. 978-1-59158-597-X, $50.00 [*Colorado Libraries,* February 2009]

Lundahl, Mats. *Bebo de Cuba; Bebo Valdés y Su Mundo*, by Mats Lundahl. Traducción de Linda Oakeshott Dragó. Barcelona: RBA Libros, 2008. 978-849-86-7259-6, $33.99 [*Críticas*, November 2008]

Bonelli, Florencia. *Marlene*, by Florencia Bonelli. Buenos Aires: Aguilar, Altea, Taurus, Alfaguara, 2008. 978-987-04-0995-3, $24.95 [*Críticas*, October 2008]

Keret, Etgar. Traducción de Ana María Bejarano. *Pizzería Kamikaze y Otras Relatos.* México, D.F.: Editorial Sexto Piso, 2008. 968-5679-29-0, no price given [*Críticas*, September 2008]

Littauer, Marita, and Florence Littauer. *Enriquece tu Comunicación. Miami, Fla.: Editorial Unilit, 2008.* 978-0-7899-1521-4, $11.99 [*Críticas*, August 2008]

Martínez, Guillermo. *La Muerte Lenta de Luciana B.* New York: Rayo Planeta, 2008. 978-0-06-156551-9, $14.95 [*Críticas*, May 2008]

Matthews, Joseph R. *The Evaluation and Measurement of Library Services.* Westport, Conn.: Libraries Unlimited, 2007. 978-1-59158-532-9, $50.00 [*Colorado Libraries,* April 2008]

Gómez-Jurado, Juan. *A Masacre de Virginia Tech: Anatomía de una Mente Torturada.* Barcelona: Ediciones El Andén, 2007. 978-84-935789-4-7, €16.50 [*Críticas*, February, 2008]

Matthews, Joseph R. *Library Assessment in Higher Education.* Westport, Conn.: Libraries Unlimited, 2007. 978-1-59158-531-2, $45.00 [*Colorado Libraries,* February 2008]

Chacón, Inma. *La Princesa India: Cuando el Viento Azul.* México: Alfaguara, 2006. 970-770398-9, $19.95 [*Críticas*, June 2006]

Vargas Llosa, Mario. *Israel/Palestina: Paz o Guerra Santa.* fotogs. by Morgana Vargas Llosa. Spain/U.S.: Aguilar: Santillana, 2006. 84-03-09691-7, paper, $19.95 [*Críticas*, May 2006]

Findlay, Diane. *Digging into Dewey.* Fort Atkinson, Wisc.: Upstart Books, 2005. 978-1-932146-18-9, $16.95 [*Colorado Libraries,* May 2006]

Pequeñas Resistencias 4: Antología del Nuevo Cuento Norteamericano y Caribeño. Menéndez, Ronaldo, Ignacio Padilla & Enrique del Risco, eds. Madrid**:** Páginas de Espuma, 2005. 84-95642-59-X, paper, $36.95 [*Críticas*, April 2006]

Rueda, André. *Vengo a Salvar a España: Biografía de Un Franco Desconocido.* Madrid**:** Nowtilus (Investigación Abierta), 2005. photogs., bibliog. 84-9763-202-8, paper, $23.95 [*Críticas*, March 2006]

Becerra, Ángela. *El Penúltimo Sueño.* 1st ed. Barcelona: Planeta, 2005. 84-08-05795-2, $25.95. [*Críticas*, January 2006]

Aguilar Camín, Héctor. *La Conspiración de la Fortuna.* 1st ed. México: Planeta, 2005. 970-37-0368-2, $19.95 [*Críticas*, October 2005]

México en Sus Libros. Enrique Florescano with Pablo Mijangos, editors & compilers. 1st ed. México, D.F.: Taurus Aguilar, 2004. 968-19-0783-3, $16.95 [*Críticas*, September 2005]

Historia Económica de México. Coordinator, Enrique Semo. México: Universidad Nacional Autónoma de México, Editorial Oceano de México, 2004. 13 vols. 970-32-0805+3 (obra completa), $9.25 each [*Críticas*, August 2005]

Czarnowsky, Christyne A. and Michael H. Williams. *Managing Your Wired Workforce: A Practical Guide.* Denver, Colo.: Bradford Pub., 2003. 1-883726-79-4, $24.95 [*Colorado Libraries,* 2004]

Abraham Lincoln. Colección Grandes Biografías. Madrid: Edimat Libros, 2003. 84-8403-858-0, €4.95 [*Críticas*, 2004]

Alponte, Juan María. *Colón: el Hombre, el Navegante, la Leyenda.* México, D.F.: Aguilar, 2003. 968-19-1260-8, $16.95 [*Críticas*, 2004]

Olcese Salvatecci, Alfieri. *Cómo Estudiar con Ėxito: Téchnicas yHhábitos Para Aprender Major.* México, D.F.: Alfaomega Grupo Editor, 2002. 970-15-0764-9 [*Críticas*, 2003]

Mujeres Como Islas: Antología de Narradoras Cubanas, Dominicanas, Puertoriqueñas. Edición: Olga Marta Pérez, Thelma Jiménez, Andrés Blanco D., eds. Santo Domingo, República Dominicana: Ediciones Ferilibro, 2002. 959-209-419-5 [*Críticas*, 2003]

Tibol, Raquel. *Los Murales de Diego Rivera: Universidad Autónoma Chapingo.* México, D.F.: Editorial RM, Universidad Autónoma Chapingo, 2002. 968-5208-08-5 [*Críticas*, 2003]

Lindsay-Poland, John. *Emperors in the Jungle: the Hidden History of the U.S. in Panama.* Durham, N.C.: Duke University Press, 2003. 0-8223-3098-9, $18.95 [*Críticas*, 2003]

Kaplan, Allison G. and Ann Marlowe Riedling. *Catalog It! A Guide to Cataloging School Library Materials.* Worthington, Ohio: Linworth Pub., 2002. 1-58683-014-7, $44.95 [*Colorado Libraries,* 2002]

Bardach, Ann Louise. *Cuba Confidential: Love and Vengeance in Miami and Havana.* New York: Random, 2002. 0-375-50489-3, $25.95 [*Library Journal*, 2002]

Swan, James. *Fundraising for Libraries: 25 Proven Ways to Get More Money for Your Library.* New York: Neal Schuman, 2002. 1-55570-433-6, $69.95 [*Colorado Libraries,* 2002]

Puíg de Lange, Victoria. *Sol Con Agua.* Nashville, Tenn.: Editorial Vistazo/Ediciones Reio Negro, 2002. 0-9724506-0-2, $17.75 [*Críticas*, 2002]

The Encyclopedia of Latin American Politics. Edited by Diana Kapiszewski; assistant editor, Alexander Kazan. Westport, Conn.: Oryx Press, 2002. 1-57356-306-4, $74.95 [*Library Journal*, 2002]

Vargas Lizano, Isabel. *Y Si Quieres Saber de Mi Pasado.* Con la colaboración de J.C. Vales. Madrid: Santillana Ediciones Generales, S.L., 2002. 84-03-09278-4, $18.95 [*Críticas*, 2002]

Ruy Sánchez, Alberto. *Los Jardines Secretos de Mogador: Voces de Tierra.* México, D.F.: Alfaguara, S.A., 2001. 968-19-0879-1, $16.95 [*Críticas*, 2002]

Chávez, Ricardo and Celso Santajuliana. *El Final de las Nubes.* Barcelona: RBA Libros, S.A., 2001. 84-7901-760-0, $11.95 [*Críticas*, 2002]

The Power of Language / El Poder de la Palabra: Selected Papers from the Second REFORMA National Conference. Edited by Lillian Castillo-Speed and the REFORMA National Conference Publications Committee. Englewood, Colo.: Libraries Unlimited, 2001. 1-563089459, $35.00 [*Colorado Libraries,* 2001]

Martínez, Rubén. *Crossing Over: A Mexican Family on the Migrant Trail.* Metropolitan: Holt, 2001. 0-8050-4908-8, $26.00 [*Library Journal*, 2001]

Guevara, Ernesto "Che." *The African Dream: the Diaries of the Revolutionary War in the Congo.* Translated from the Spanish by Patrick Camiller. With an introduction by Richard Gott and a foreword by Aleida Guevara March. New York: Grove Press, 2001. 0-8021-3834-9, $13.00 [*Library Journal*, 2001]

Cooper, Gail and Garry Cooper. *New Virtual Field Trips.* Englewood, Colo.: Libraries Unlimited, 2001. 1-56308-887-8, $27.50 [*Colorado Libraries,* 2001]

NATIONAL SERVICE & PROFESSIONAL AFFILIATIONS

American Library Association, Life Member
Association for Library Collections & Technical Services (now CORE)
Cataloging, Classification, and Metadata Section
ALCTS Editorial Board, Member, 2015-2019
Committee on Cataloging: Description and Access, Member, 2008-2012
Test Site for RDA, Manager, 2009-2011
Nominating Committee, Member, 2007-2008
Committee for Education and Training of Catalogers, Chair, 2006-2007, Member, 2003-2007
Competencies & Education for a Career in Cataloging Interest Group, Chair, 2010-2012; Member, 2010-
President's Program Committee, 2015-2016
Education Committee, Member, 2005-2007
Task Force on Competencies and Education for a Career in Cataloging, Chair, 2007-2009
2007 Annual Meeting Pre-conference, "What They Don't Teach in Library School: Competencies, Education and Employer Expectations for a Career in Cataloging," Steering Committee Chair
Fundraising Committee, Member, 2004-2006
Office of Diversity
Committee on Diversity, Chair, 2010-2011
Diversity Research Advisory Committee, Member, 2009-2010
Spectrum Scholar Mentor, 2009
Diversity Grants Review Committee, Member, 2007, 2010, 2012
Office of Statistics and Research
Research and Statistics Committee, Member, 2005-2007; Intern, 2003-2005
Library Research Round Table
Nominating Committee, 2022-2023
Membership Committee, 2019-2021
Board of Directors, Member At-Large, 2009-2012
Office of Accreditation
Accreditation Panel Member (training completed 2004)
Accreditation Review Panel Member (training completed 2004)

REFORMA, Life Member
National Board of Directors, 2005-2013
National Fundraising Chair, 2005-2013
National Recruiting and Mentoring Committee, 2008-2010
Colorado Chapter, Secretary, 2004-2005
Colorado Chapter Liaison to National Board of Directors, 2004-2013

American Association of Law Libraries (AALL), Life Member Online Audiovisual Catalogers Association (OLAC) Colorado Association of Law Librarians (CoALL)

American Association of University Women Association for Library and Information Science Education (ALISE)
University of Denver ALISE Representative, 2003-2008; 2010-2011
Membership Advisory Committee, 2007-2010
Technical Services Education Special Interest Group, 2003-
Garfield Doctoral Dissertation Award Reviewer, 2012
Garfield Doctoral Dissertation Scholarship Reviewer, 2014

American Association of University Professors (AAUP), 2006-

American Grant Writers Association, 2014- Grant Professionals Institute, 2016- National Grants Management Association, 2014-
Grant Reviewer (National and Regional Team Leader), U.S. Department of Education, 1998- Grant Reviewer, Broadband Technologies Opportunity Program, U.S. Department of Commerce, 2009
Grant Reviewer, Institute of Museum and Library Services, 1998-2000
Grant Reviewer, Colorado Department of Education, 2014-
Grant Reviewer, Colorado State Library, 1998-
Grant Reviewer, American Association of Community Colleges *Working Connections* program, 1999
Peer Reviewer, *Journal for Library and Information Science Education,* 2005-
Peer Reviewer, *Journal of Library Metadata,* 2009
Peer Reviewer, *International Journal of Library and Information Science,* 2011
Regular Columnist, *The Bottom Line*, 2013-2016
Book Reviewer, *Library Journal*, 2001
Book Reviewer, *Críticas*, 2002-2009
Book Reviewer, *Colorado Libraries,* 2000-2012

REGIONAL SERVICE & PROFESSIONAL AFFILIATIONS

Mountain Plains Library Association
Professional Development Grants Committee, Member, 2005-2006
Professional Development Policy and Guidelines Sub-committee Chair, 2006

Colorado Association of Libraries
"Student Voices" Column Editor, *Colorado Libraries,* 2005-2006
Conference Planning Committee, Member, 2002
Technical Services and Automation Division, Chair, 2002-2003; Member, 2000-
Academic Libraries Division, Peer Review Conference Papers Committee, Member, 2007-2009
Education Committee, Member, 1988-1993
Diverse Populations Committee, Member, 2009-2013

SERVICE TO THE UNIVERSITY OF DENVER
Center for Teaching and Learning Faculty Advisory Board, 2007-2008; 2010-2012
Center for Community Engagement and Service Learning Advisory Board, 2007-2012
Faculty Senate
Executive Committee, 2008-2013
Nominations, Rules & Credentials Committee, Chair, 2008-2013; Member 2007-2013
Appointment, Promotion, and Tenure Revision Committee, 2010-2012
Grievance Policy Committee Member, 2007-2010
Law Library Director Search Committee Chair, 2012-2013
PROF Grant Review, College Representative to the University Review Team, 2006, 2008
Project Homeless Connect Evaluations, Principal Investigator, 2006-2009
University Technology Council, 2007-2009
University of Denver Hyde Interviews for Incoming Freshmen, 2003-2012

SERVICE TO THE MORGRIDGE COLLEGE OF EDUCATION
Appointment, Tenure & Review Committee
Member, voting, 2003-2005; 2007- 2009
Chair, Clinical Faculty Promotion & Tenure Policy Subcommittee, 2008-2009
Member, Community Engagement Subcommittee, 2007-2009
Member, Tenure Review Panel, 2003
Advancement and Alumni Relations Committee, Chair, 2003-2007; Member, 2002-2007
College Building Committee Member, 2004-2010

College of Education Student Association, Faculty Advisor, 2004-2007; 2009-2010
Faculty Senator, 2007-2013
Research and Scholarship Committee, Chair, 2008-2009; Member, 2002-2003, 2008-2009
Research and Grant Mentoring Committee, Chair, 2009-2010
Research Task Force Member, 2010-2012
Search Committee Member, Assistant Professor for Curriculum & Instruction, 2010-2011
Workload Task Force Member, 2010-2011

SERVICE TO THE LIBRARY & INFORMATION SCIENCE PROGRAM

Library and Information Science Student and Alumni Association, Faculty Advisor, 2002-2008
ALA Student Chapter, Faculty Advisor, 2005-2008
Beta Phi Mu Phi Chapter, Faculty Advisor, 2004-2014
Steering Committee Member, Accreditation by the American Library Association, 2001-2004
Search Committee Member, Associate Professor for LIS, 2006
Search Committee Chair, Assistant Professors for LIS, 2003, 2005, 2006, 2007
Search Committee Ex-Officio Member, Director for LIS, 2004

SERVICE TO SAM HOUSTON STATE UNIVERSITY

Rio Roundup: South Texas Literature Conference, Conference Coordinator, 1993
External Relations, Fund Raising, Grants Committee, Chair, 1993-1995
Advisory Council Committee, Chair, 1993-1995
Students, Admissions, and Advisement Committee, Chair, 1994
Institutional Effectiveness Committee, Member, 1993-1995

SERVICE TO THE COLLEGE OF EDUCATION AND APPLIED SCIENCE

Faculty Affairs Committee, Member, 1993-1995
Curriculum Committee, Member, 1993-1995
Continuing Education Committee, Member, 1993-1995

SERVICE TO THE COMMUNITY

French Teacher & Student Exchange with Laon, France, Monarch High School, Boulder Valley School District (Boulder, Colorado), 2017-
Denver/Boulder Games 2022, Board of Directors, Secretary-Treasurer, 2015-2018
United Way Campaign Committee, College of Education, 2006
Arapahoe County, Election Judge for the County Clerk and Recorder, 2000-2005
Arthritis Foundation, Rocky Mountain Chapter, Certified Educator & Trainer, 1999-2008
Bonfils Blood Center, Silver Level Donor, 2000-2016
Denver Museum of Natural History, Docent, 1992
Tech Prep of the Lower Rio Grande Valley, Inc. (Harlingen, Texas) Board of Directors, 1995-1997
Executive Committee, 1996-1997; Chair, Development Committee, 1995-1997; Chair, Fiscal Agency Committee, 1995-1996; Chair, Colleges and Universities Committee, 1996-1997
Gilpin County (Colorado) Public Library Board of Trustees, 1986-1989; Vice President, 1987-1989
City of Central (Colorado) Economic Development Committee, 1987-1989
Columbine Family Health Centers, Inc. (Nederland and Black Hawk, Colorado) Board of Directors, 1988-1989

CERTIFICATION

Permanent Public Librarian Certificate - Pennsylvania, New York, Texas
Westlaw Expert Witness, 2008-
Certified Grant Writer®, 2016-

AWARDS AND HONORS

Advanced Practitioner for Service Learning and Community Engagement, University of Denver, 2011
Platinum Star Alumnae, College of Information, Library Science & Technologies, University of North Texas, 2009
Commendation for Integration of Technologies in Teaching & Learning Environment, University of Denver, 2006
Outstanding Adjunct Faculty Member Award, College of Education, University of Denver, 2002
Beta Phi Mu, Pi, University of Pittsburgh, 1985
Alpha Lambda Sigma, University of North Texas, 1972
Albert Nelson Marquis Lifetime Achievement Award, Who's Who in America
Who's Who in American Women
Who's Who of Women Executives
Dictionary of International Biography
Who's Who in the East
Who's Who in the South and Southwest
Who's Who in the World
Who's Who of Online Professionals
Who's Who in Library and Information Science
2,000 Notable Women
Who's Who of Emerging Leaders
Who's Who in Professional and Executive Women
Who's Who in American Education
International Who's Who of Professional and Business Women
International Leaders in Achievement
International Educator of the Year
Who's Who in Finance and Industry
Who's Who in Finance and Business

Invited International and National Conference Presentations

Driscoll, Margaret, Christy Confetti Higgins, Scott Brown, and Sylvia D. Hall-Ellis. *A View from Within: Open House Tour of Three Canvas Core Courses*. Presentation to be delivered at the School of Information, San José State University Professional Development Seminar, San José, California, October 17, 2019.

Hall-Ellis, Sylvia D. *Invest in Me -- I'm Your Future: Succession Planning for Libraries.* Keynote presentation delivered at the ALCTS President's Symposium, Boston, Mass., January 8, 2016.

Seidel, Kent E. and Sylvia D. Hall-Ellis. *Making Grants Work for You: Strategies for Doctoral Students and Early Career Scholars.* Presentation delivered at the University Council for Educational Administration, Early Career Scholars Session, Indianapolis, Ind., November 9, 2013.

Hall-Ellis, Sylvia D. *So You Want to be a Manager; Leadership Skills and Competencies for Technical Services Managers and Administrators.* Presentation delivered at the 138th Annual Conference, American Library Association, Chicago, Ill., June 29, 2013.

Seidel, Kent E., Karen S. Riley, Lyndsay Agans, Susan Korach, and Sylvia D. Hall-Ellis. *Making Grants Work for You (Instead of Just Working for Grants).* A panel discussion delivered at the University Council for Educational Administration, Early Career Scholars Session, Denver, Colo., November 17, 2012.

Hall-Ellis, Sylvia D. *After the Great TS Reorganization: The Westminster Law Library.* Presentation delivered at the 137th Annual Conference, American Library Association, Anaheim, Calif., June 23, 2012.

Hall-Ellis, Sylvia D. *Conversations with Catalogers in the 21st Century.* A panel discussion sponsored by the ALCTS Competencies for a Career in Cataloging Interest Group, delivered at the 137th Annual Conference, American Library Association, Anaheim, Calif., June 22, 2012.

Hall-Ellis, Sylvia D., moderator. *Mid-Career Leaders Program.* A panel discussion sponsored by the ALA Committee on Diversity delivered at the 136th Annual Conference, American Library Association, New Orleans, La., June 26, 2011.

Hall-Ellis, Sylvia D., moderator. *Diversity Town Hall.* A community conversation sponsored by the ALA Committee on Diversity delivered at the 136th Annual Conference, American Library Association, New Orleans, La., June 24, 2011.

LaBarre, Kathryn, Sylvia D. Hall-Ellis, Karen Anderson, Rick Hasenyager, Christopher Cronin, and Penny Baker. *Briefings from RDA Test Participants.* A panel discussion delivered at the Midwinter Conference, American Library Association, San Diego, Calif., January 7, 2011.

Miksa, Shawne, Marjorie Bloss, and Sylvia D. Hall-Ellis. *Educating the Next Generation of Catalogers: Teaching RDA.* A panel discussion delivered at the 97th Annual Conference, Association for Library and Information Science Education, San Diego, Calif., January 7, 2011.

Hall-Ellis, Sylvia D., Robert Maxwell, John Hostage, and George Prager. *RDA Panel: What Cataloging Managers Need to Know.* Presentation delivered at the 103rd Annual Conference, American Association of Law Librarians, Denver, Colo., July 12, 2010.

Hall-Ellis, Sylvia D. and Stacey L. Bowers. *Catalogers in the RDA Environment: Skill Sets, Expectations and Challenges.* Presentation delivered at the 103rd Annual Conference, American Association of Law Librarians, Denver, Colo., July 11, 2010.

Hall-Ellis, Sylvia D. *Comfortable in Your Cataloging and Metadata Specialist Skin? Or, So You Want to Hire a Cataloger.* Presentation delivered to the ALCTS Research Group at the 134th Annual Conference, American Library Association, Chicago, Ill., July 11, 2009.

Perez, Megan, Sylvia D. Hall-Ellis, and Denise Anthony. *From Novice to Expert: Collaboration for Succession Planning.* A "hot topic" presentation delivered at the 14th ACRL Conference, Seattle, Wash., March 13, 2009.

Hall-Ellis, Sylvia D. *Cataloging in the RDA Environment: Skill Sets, Expectations and Challenges.* Presentation delivered to the ALCTS Research and Publications Committee at the Midwinter Conference, American Library Association, Denver, Colo., January 24, 2009.

Hall-Ellis, Sylvia D. *LIS Cataloging Education for the 21st Century: Expectations and Challenges.* A panel discussion held at the 95th Annual Conference, Association for Library and Information Science Education, Denver, Colo., January 23, 2009.

Chu, Clara, Sylvia D. Hall-Ellis, and Mark Winston. *The Doctoral Degree & Building a Career.* A panel discussion delivered at the ALA Office of Diversity Spectrum Doctoral Fellows E.J. Josey Leadership Institute, Midwinter Conference, American Library Association, Denver, Colo., January 20, 2009.

Hall-Ellis, Sylvia D. and Robert O. Ellett, Jr. *Fundamentals of Cataloging Course: An Overview of the ALCTS Online Course.* Presentation delivered to the ALCTS Big Heads Group, 133rd Annual Conference, American Library Association, Anaheim, Calif., June 30, 2008.

Hall-Ellis, Sylvia D. *Employers' Expectations for Technical Services Librarians: What We Don't Know.* Presentation delivered to the ALCTS Research and Publications Committee Program, 133rd Annual Conference, American Library Association, Anaheim, Calif., June 28, 2008.

Hall-Ellis, Sylvia D., Virginia R. Maloney, and Mary Stansbury. *Institutional Responses to Engaged Scholarship: The Carnegie Foundation Engaged University Classification at Two Universities.* Presentation delivered to the 94th Annual Conference, Association for Library and Information Science Education, Philadelphia, Pa., January 11, 2008.

Hall-Ellis, Sylvia D. *Puzzles, Problems, and Predicaments.* Presentation delivered to the ALCTS Research Discussion Group, 132nd Annual Conference, American Library Association, Washington, D.C., June 23, 2007.

Hall-Ellis, Sylvia D. *Cataloging Education: A New Emphasis for the Library and Information Science Curriculum.* Presentation delivered to the ALCTS Pre-conference, 132nd Annual Conference, American Library Association, Washington, D.C., June 22, 2007. http://www.loc.gov/catdir/cpso/careercat.html

Ellett, Jr., Robert O. and Sylvia D. Hall-Ellis. *Copy Cataloging Done Smarter.* Presentation delivered to the International Conference on Interdisciplinary Information Sciences and Technologies (InSciT2006), October 25-28, 2006.

Hall-Ellis, Sylvia D. and Robert O. Ellett, Jr. *Cooperative Cataloging: Challenges and Opportunities for Defense Libraries.* Presentation delivered to the 1st Annual Conference of Defense Libraries, Spanish Ministry of Defense, Madrid, Spain, July 7, 2006.

Hall-Ellis, Sylvia D. *Cataloger Competencies: Do the Employers Require What the Professors Teach?* Presentation delivered to the ALCTS CCS Heads of Cataloging Discussion Group, 131st Annual Conference, American Library Association, New Orleans, La., June 26, 2006.

Grealy, Deborah S. and Sylvia D. Hall-Ellis. *From Research to Practice: The Scholarship of Teaching and Learning in LIS Education.* Presentation delivered to the at the 92nd Annual Conference, Association for Library and Information Science Education, San Antonio, Tex., January 18, 2006.

Hall-Ellis, Sylvia D. *Employers' Expectations for Entry-Level Catalogers: What Position Announcement Data Indicate.* Research paper delivered to the Technical Services Special Interests Group, 91st Annual Conference, Association for Library and Information Science Education, Boston, Mass., January 12, 2005. http://dlist.sir.arizona.edu/

Hall-Ellis, Sylvia D. *Common Errors in MARC Records Prepared by LIS Students: What Does It Mean?* Research paper delivered to the ALCTS CCS Cataloging Norms Discussion Group, Mid-Winter Conference, 90th American Library Association, San Diego, Calif., January 10, 2004.

Hall-Ellis, Sylvia D. *Visual Arts as Foundation for Successful Library Automation: The Rocky Mountain College of Art & Design Experience.* Paper delivered at the 6th Annual Conference of Higher Education, Charleston, S. C., 1993.

Hall, Sylvia D. *Design Elements for Bibliographic Databases: An Overview.* Paper delivered at the 14th Online National Conference, New York, 1983.

Invited Regional Conference Presentations

Hall-Ellis, Sylvia D., Hudson, Christopher D., Brittany Cronin, and Kathryn Michaels. "The Colorado Law Project: Meeting the Public's Need for Legal Information." Panel discussion delivered at the Mountain Plains Library Association Conference, Billings, Mont., April 9, 2011.

Grealy, Deborah S. and Sylvia D. Hall-Ellis. *Education for Information Professionals in New Mexico: Library & Information Science Graduate Education at the University of Denver.* Presentation delivered at the New Mexico Library Education Summit, Las Vegas, N.M., September 26, 2005.

Hall-Ellis, Sylvia D. *Public Library-School Library Partnerships.* Presentation delivered at the 3rd Annual Colorado Association of Libraries Conference with the Mountain Plains Library Association, Denver, Colo., October 22, 2004.

Hall-Ellis, Sylvia D. *Learn All You Can – Educational Partnership Opportunities for the Lewis and Clark Bicentennial Commemoration.* Paper delivered at the 3rd Annual Lewis and Clark Bicentennial Council National Planning Conference, Bismarck, N.D., April 26, 1998.

Invited State Conference Presentations

Grealy, Deborah S. and Sylvia D. Hall-Ellis. *Academic Library Leadership Changes: Using Succession Planning and Mentoring*. Presentation delivered at the Minnesota Library Education Conference, St. Cloud, Minn., October 10, 2013.

Hall-Ellis, Sylvia D., Merrie Valliant, and Melissa Powell. *RDA: What Is It and What Do You Need To Do With It At Your Library?* Presentation delivered at the Colorado Library Consortium Spring Conference, Ft. Morgan, Colo., April 26, 2013.

Hall-Ellis, Sylvia D. *Service Learning and the Library & Information Science Graduate Education at the University of Denver.* Presentation delivered at the 4th LEADS Scholars Orientation, Denver, Colo., August 5, 2009.

Hall-Ellis, Sylvia D. *Service Learning: Enhancement to Library & Information Science Graduate Education at the University of Denver.* Presentation delivered at the 3rd LEADS Scholars Orientation, Denver, Colo., June 2008.

Hall-Ellis, Sylvia D. *Law Librarianship: A Community Conversation.* Sponsored by the Colorado Association of Law Libraries. Paper delivered at the Colorado Supreme Court Library, Denver, Colo., May 14, 2008.

Hall-Ellis, Sylvia D. *Opportunities and Challenges in Law Librarianship: A Community Conversation.* Presentation delivered at the Sturm College of Law, Denver, Colo., November 7, 2007.

Ellis, Sylvia D. *Grant Writing Resources for Nursing Professionals.* Presentation delivered at the Presbyterian / St. Luke's Health One Medical Center 1st Annual Research Symposium, Denver, Colo., October 17, 2007.

Hall-Ellis, Sylvia D. *Project Homeless Connect 4 Event Evaluation – Insights and Lessons Learned.* Presentation delivered at the Homelessness Research Symposium: What is DU Doing about Homelessness in Denver, Denver, Colo., September 14, 2007.

Hall-Ellis, Sylvia D. *Service Learning and the Library & Information Science Graduate Education at the University of Denver.* Presentation delivered at the 2nd LEADS Scholars Orientation, Denver, Colo., August 10, 2007.

Hall-Ellis, Sylvia D. *Education for Information Professionals in a Digital Environment: Library & Information Science Graduate Education at the University of Denver.* Presentation delivered at the 15th Spring Mountains and Plains Parapros Conference, Denver, Colo., February 24, 2007.

Hall-Ellis, Sylvia D. *Public Library Service to Spanish-Speaking and Latino Residents in Denver: A Case Study.* Presentation delivered at the 4th Annual Colorado Association of Libraries Conference, Denver, Colo., November 10, 2005.

Hall-Ellis, Sylvia D. *Education for Information Professionals in a Digital Environment: Library & Information Science Graduate Education at the University of Denver.* Presentation delivered at the 14th Annual Mountains and Plains Parapros Conference, Aurora, Colo., July 29, 2005.

Hall-Ellis, Sylvia D. *Educational Opportunities: Library & Information Science Graduate Education at the University of Denver.* Presentation delivered at the 13th Annual Mountains and Plains Parapros Conference, Centennial, Colo., August 6, 2004.

Hall-Ellis, Sylvia D. *Library Education & Training: Focus on the West: An LIS Faculty Member's Personal Response*. Presentation delivered at the 1st Annual Colorado Association of Libraries Conference, Keystone, Colo., October 18, 2002.

Hall-Ellis, Sylvia D. *Grant Writing for School Librarians.* Presentation delivered at the 2002 Annual Colorado Education Media Association Conference, Colorado Springs, Colo., February 15, 2002.

Hall-Ellis, Sylvia D. *Grants – Opportunities for the Future.* Paper delivered at the Southeast Regional Accountability Annual Conference, Lamar, Colo., November 12, 1998.

Hall-Ellis, Sylvia D. *The Texas Library Connection and Interlibrary Loan: An Experiment in Resource Sharing.* Paper delivered at the Texas Computer Educators' Association Annual Conference, Austin, Tex., February 6, 1997.

Hall-Ellis, Sylvia D. *Finding Grant Sources on the Internet: A Guide for Librarians.* Paper delivered at the 2nd Annual Institute for School Library Personnel, Pharr-San Juan-Alamo North High School, Pharr, Tex., July 29, 1996**.**

Hall-Ellis, Sylvia D. *Mathematical and Logical Thinking: A Critical Intelligence.* Paper delivered at the 3rd Annual Paraprofessional Conference at the University of Texas - Pan American, Edinburg, Tex., March 8, 1996.

Hall-Ellis, Sylvia D. *Cataloging Trends and Issues: Update Session.* Paper delivered at the 1st Annual Institute for School Library Personnel, South Texas Community College, McAllen, Tex., July 19, 1995.

Hall-Ellis, Sylvia D. *Grant Writing: Tips and Encouragement for School Librarians.* Paper delivered at the 1st Annual Institute for School Library Personnel, South Texas Community College, McAllen, Tex., July 18 and 19, 1995.

Hall-Ellis, Sylvia D. *How to Become an Expert Grant Writer.* Paper delivered at the 3rd Annual High School Principals' Academy, South Padre Island, Port Isabel, Tex., June 19, 1995.

Texas Library Study: Results from Regions I and II. Paper delivered at the 3rd Annual Technology Conference, Texas A&M University, College Station, Tex., November 18, 1994.

Hall-Ellis, Sylvia D. *Academic Achievement and Middle School Students.* Paper delivered at the 8th Annual Young Adult Conference, Sam Houston State University, Huntsville, Tex., November 5, 1994.

Hall-Ellis, Sylvia D. *Multimedia Resources for Library Leaders.* Paper delivered at the Institute for Librarians in A Multicultural Environment, Sam Houston State University, Huntsville, Tex., June 10, 1994.

Hall-Ellis, Sylvia D. *Finding the Resource: Empowering the User, or, the Case for Curriculum Based Subject Access to Learning Resource Center Collections.* Paper delivered at the 81st Annual Texas Library Association Conference, Corpus Christi, Tex., April 12-16, 1994.

Hall-Ellis, Sylvia D. and William H. Pichette. *Sam Houston State University Makes Use of OCLC/AMIGOS Collection Analysis CD.* Paper delivered at the 81st Annual Texas Library Association Conference, Corpus Christi, Tex., April 12-16, 1994.

Hall, Sylvia D. *Funding and Library Development in Pennsylvania: A Symbiotic Relationship.* Paper delivered at the Annual Graduate Student Colloquia, University of Pittsburgh, School of Library and Information Science, 1982.

Hall, Sylvia D. *Leadership for Public Library Trustees.* Paper delivered for the Trustees Division, Pennsylvania Library Association Annual Conference, Lancaster, Penn., 1981.

Seminar and Professional Development Presentations

Taylor, Meredith, and Sylvia D. Hall-Ellis. *Talent Management and Succession Planning.* ALCTS eForum, held March 22, 2017.

Hirsh, Sandra, Heather O'Brien, Michelle Holschuh Simmons, Michael Krasulski, and Sylvia D. Hall-Ellis. *Information Services Today: An Introduction. Part 3: Information Services: Roles in the Digital Age*. Rowan and Littlefield in partnership with Library Journal webinar, recorded February 5, 2015.

Hall-Ellis, Sylvia D. and Jennifer Sweda. *Copy Cataloging in an RDA Environment.* ALCTS eForum, held May 14 and 15, 2013.

Hall-Ellis, Sylvia D. *Law Librarianship: A Community Conversation.* Sponsored by the Colorado Association of Law Libraries, presented at the Colorado Supreme Court Library, Denver, Colo., May 14, 2008.

Hall-Ellis, Sylvia D. and Beatrice Z. Gerrish. *Reading and Libraries: Recent Research in Reading.* Presentation at the Ricks Center for Gifted Education, Denver, Colo., March 4, 2008.

Hall-Ellis, Sylvia D. *Cataloger Competencies: Do the Employers Require What the Professors Teach?* Presentation for the School of Library and Information Science, San José State University, February 12, 2008.

Hall-Ellis, Sylvia D. and Robert O. Ellett, Jr. *Cooperative Cataloging: Rules, Tools, and Conventions for Building a Multi-institutional Catalog.* Sponsored for the Spanish Ministry of Defense, Madrid, Spain, July 10, 2006.

Hall-Ellis, Sylvia D. *Cash for Kids: Grant Writing Opportunities for Youth Services Librarians.* Sponsored by the Colorado Young Adult Librarians; presented at Bemis Memorial Library, Littleton, Colo., November 13, 2002.

Hall-Ellis, Sylvia D. *MARC Records and Authority Control: Planning for Bibliographic Database Migration.* Sponsored and held at the Douglas County Public Library, Castle Rock, Colo., May 28, 2002.
Grant Writing: A Refresher for Librarians. Sponsored by Library and Information Science Program, College of Education, University of Denver; presented at University Center at Chaparral, August 12, 2000.

Hall-Ellis, Sylvia D. *Shaking the Money Tree – Basic Grant Writing for Colorado Educators.* Sponsored by the Office of Educational Telecommunications of the Colorado Department of Education.
Pikes Peak Community College, Colorado Springs, Colo., November 16, 1998.
Pueblo School District 60, Pueblo, Colo., November 12, 1998.

University of Northern Colorado, Greeley, Colo., November 10, 1998.
United Technology Educational Partnership, Grand Junction, Colo., November 9, 1998.

Hall-Ellis, Sylvia D. *Cataloging Multimedia, Kits, Globes and Map Materials in USMARC.* Sponsored and hosted by Region One Education Service Center, Edinburg, Tex., April 24, 1997 and December 12, 1996.

Hall-Ellis, Sylvia D. *New Standards for School Library Media Centers.* Sponsored and hosted by Region One Education Service Center, Edinburg, Tex., April 15, 1997.

Hall-Ellis, Sylvia D. *The School Library Media Specialist in the 21st Century: Visions for the Future.* Sponsored and hosted by Pharr-San Juan-Alamo Independent School District, Pharr, Tex., April 4, 1997.

Hall-Ellis, Sylvia D. *Cataloging Sound Recordings and Audio Materials in USMARC.* Sponsored and hosted by Region One Education Service Center, Edinburg, Tex., March 20, 1997 and November 21, 1996.

Hall-Ellis, Sylvia D. *Evaluating and Selecting CD-ROMS for School Library Media Collections.* Sponsored and hosted by Region One Education Service Center, Edinburg, Tex., March 18, 1997.

Hall-Ellis, Sylvia D. *Cataloging Audiovisual Materials in USMARC.* Sponsored and hosted by Region One Education Service Center, Edinburg, Tex., February 27, 1997, November 7, 1996 and October 24, 1996.

Hall-Ellis, Sylvia D. *Introduction to Dialog: Basic Searching Strategies.* Sponsored and hosted by Region One Education Service Center, Edinburg, Tex., February 14, 1997.

Hall-Ellis, Sylvia D. *Cataloging Books in USMARC.* Sponsored and hosted by Region One Education Service Center, Edinburg, Tex., January 30, 1997, October 10, 1996, September 26, 1996 and August 8, 1996.

Hall-Ellis, Sylvia D. *Advanced Internet Searching Techniques for Librarians.* Sponsored and hosted by Region One Education Service Center, Edinburg, Tex., January 21, 1997.

Hall-Ellis, Sylvia D. *Texas Library Connection Full-Text Searching.* Sponsored and hosted by Region One Education Service Center, Edinburg, Tex., December 13, 1996 and October 25, 1996.

Hall-Ellis, Sylvia D. *Developing Evaluation Strategies for Grants and Proposals.* Sponsored and hosted by Region One Education Service Center, Edinburg, Tex., December 10, 1996.

Hall-Ellis, Sylvia D. *Developing Needs Assessment for Grants and Proposals.* Sponsored and hosted by Region One Education Service Center, Edinburg, Tex., November 12, 1996.

Hall-Ellis, Sylvia D. *Texas Library Connection Union Catalog Searching.* Sponsored and hosted by Region One Education Service Center, Edinburg, Tex., November 8, 1996 and September 6, 1996.

Hall-Ellis, Sylvia D. *Grant Resources on the Internet.* Sponsored and hosted by Region One Education Service Center, Edinburg, Tex., October 23, 1996.

Hall-Ellis, Sylvia D. *Preparing a Response to the Telecommunications Infrastructure Fund Board: Needs Assessment, Professional Development Framework, and Evaluation Strategies.* Sponsored and hosted by Region One Education Service Center, Edinburg, Tex., October 16, 1996.

Hall-Ellis, Sylvia D. *Texas Library Connection: Building the Districtwide Bibliographic Database.* Sponsored and hosted by Mercedes Independent School District, Mercedes, Tex., September 13, 1996 and August 8, 1996. Sponsored and hosted by Los Fresnos Consolidated Independent School District, Los Fresnos, Tex., August 12, 1996.

Hall-Ellis, Sylvia D. *School-to-Work and Special Education: An Inclusive Partnership for Success.* Sponsored and hosted by the Office of Special Education, Region One Education Service Center, Edinburg, Tex., September 11, 1996.

Hall-Ellis, Sylvia D. *Telecommunications Infrastructure Fund Board: An Overview of Funding for Secondary Schools.* Sponsored and hosted by Region One Education Service Center, Edinburg, Tex., August 31, 1996.

Hall-Ellis, Sylvia D. *Cataloging Books, Multimedia, and Realia in USMARC.* Sponsored and hosted by Edinburg Consolidated Independent School District, Edinburg, Tex., August 6, 1996.

Hall-Ellis, Sylvia D. *Internet Resources for Grant Writers.* Sponsored and hosted by Region One Education Service Center, Edinburg, Tex., April 20, 1996.

Hall-Ellis, Sylvia D. *Enhanced Grant Writing Skills for Mathematics Educators: Writing Skills for Campus Teams.* Sponsored and hosted by the Office of General Education, Region One Education Service Center, Edinburg, Tex., March 22, 1996.

Hall-Ellis, Sylvia D. *Internet Resources for Grant Writers.* Sponsored and hosted by the College of Education and Applied Science, Sam Houston State University, Huntsville, Tex., March 9, 1996.

Hall-Ellis, Sylvia D. *Grant Writing for Mathematics Educators: A Development Process for Campus Teams.* Sponsored and hosted by the Office of General Education, Region One Education Service Center, Edinburg, Tex., March 4, 1996.

Hall-Ellis, Sylvia D. *Shaking the Money Tree: Preparing Successful Technology Grant Applications.* Sponsored and hosted by the Office of Technology and Media Services, Region One Education Service Center, Edinburg, Tex., February 29, 1996 and April 29, 1996.

Hall-Ellis, Sylvia D. *District-wide Technology Planning: Technical Assistance for the Texas Education Agency Initiative.* Sponsored and hosted by the Office of Technology and Media, Region One Education Service Center, Edinburg, Tex., February 2, 1996.

Hall-Ellis, Sylvia D. *Enhanced Grant Writing Skills.* Sponsored and hosted by Pharr-San Juan-Alamo Independent School District, Pharr, Tex., January 27, 1996.

Hall-Ellis, Sylvia D. *United States Copyright Act of 1976, Video Transmissions, Computer Software and the Internet.* Sponsored and hosted by the Office of Technology and Media, Region One Education Service Center, Edinburg, Tex., January 24, 1996.

Hall-Ellis, Sylvia D. *The Grant Writing Development Process.* Sponsored and hosted by Pharr-San Juan-Alamo Independent School District, Pharr, Tex., January 20, 1996.

Hall-Ellis, Sylvia D. *MARC Cataloging of Materials for Library Media Centers.* Sponsored and hosted by the Office of Media Services, Region One Education Service Center for the Donna Independent School District, Donna, Tex., August 17, 1995.

Hall-Ellis, Sylvia D. *Classification.* Sponsored by AJ Seminars, Rockville, Maryland; presented at University Hilton Hotel, Houston, Tex., May 10, 1995.

Hall-Ellis, Sylvia D. *Library Technical Services.* Sponsored by AJ Seminars, Rockville, Maryland; presented at University Hilton Hotel, Houston, Tex., April 26, 1995.

Hall-Ellis, Sylvia D. *Grant Writing: An Introduction for Public School Administrators.* Sponsored and hosted by the Office of Administrative Services, Region One Education Service Center, Edinburg, Tex., April 19, 1995.

Hall-Ellis, Sylvia D. *The School Library Media Specialist in the 21st Century: Visions for the Future.* Sponsored and hosted by the United Independent School District, Laredo, Tex., March 31, 1995.

Hall-Ellis, Sylvia D. *Using USMARC.* Sponsored by AJ Seminars, Rockville, Maryland; presented at University Hilton Hotel, Houston, Tex., March 29, 1995.

Hall-Ellis, Sylvia D. *Library Media Center Policies and Guidelines: How to Prepare for School Board Adoption.* Sponsored and hosted by the Office of Technology and Media Services, La Joya Independent School District, La Joya, Tex., March 10, 1995.

Hall-Ellis, Sylvia D. *Developing District-wide Policies and Guidelines for Library Media Centers.* Sponsored and hosted by the Office of Technology and Media Services, La Joya Independent School District, La Joya, Tex., January 10, 1995.

Hall-Ellis, Sylvia D. *MARC Cataloging of Audiovisual Materials for Library Media Centers.* Sponsored and hosted by the Office of Library Media and Technology Services, Cypress-Fairbanks Independent School District, Houston, Tex., December 1, 1994.

Hall-Ellis, Sylvia D. *The School Library Media Specialist in the 21st Century: Visions for the Future.* Sponsored and hosted by United Independent School District, Laredo, Tex., October 14, 1994.

Hall-Ellis, Sylvia D. *The School Library Media Specialist in the 21st Century: Visions for the Future.* Sponsored and hosted by the Laredo Independent School District, Laredo, Tex., October 7, 1994.

Hall-Ellis, Sylvia D. *MARC Cataloging for Library Media Centers.* Sponsored by the Office of Library Media and Technology Services, Cypress-Fairbanks Independent School District, Houston, Tex., October 5, 1994.

Hall-Ellis, Sylvia D. *Jump to the Head of the Class: Undergraduate Library Resources Available at Sam Houston State University.* Sponsored by the Office of the Associate Vice President for Student Services, Sam Houston State University, Huntsville, Tex., October 4, 1994.

Hall-Ellis, Sylvia D. *CD-ROMs - 1994's Newest and the Best for Secondary Level Media Centers.* Sponsored and hosted by Clear Lake Independent School District, Houston, Tex., June 3, 1994.

Hall-Ellis, Sylvia D. *Introduction to Classification.* Sponsored by AJ Seminars, Rockville, Maryland; presented at Holiday Inn, Market Center, Dallas, Tex., May 18, 1994.

Hall-Ellis, Sylvia D. *Basic Descriptive Cataloging.* Sponsored by AJ Seminars, Rockville, Maryland; presented at University Hilton Hotel, Houston, Tex., May 4, 1994.

Hall-Ellis, Sylvia D. *Shaking the Money Tree - Part II: Writing Successful Grant Applications.* Sponsored by Donna Independent School District, Donna, Texas, and Region One Education Service Center Edinburg, Texas; presented at South Texas Community College Library, McAllen, Tex., April 29, 1994.

Hall-Ellis, Sylvia D. *Using MARC.* Sponsored by AJ Seminars, Rockville, Maryland; presented at Holiday Inn, Market Center, Dallas, Tex., April 6, 1994.

Hall-Ellis, Sylvia D. *Automated Authority Control.* Sponsored by AJ Seminars, Rockville, Maryland; presented at University Hilton Hotel, Houston, Tex., March 23, 1994.

Hall-Ellis, Sylvia D. *Automating the District School Library Media Centers: Choices and Opportunities.* Sponsored and hosted by the Office of Technology and Library Media Services, Fort Bend Independent School District, Sugar Land, Tex., March 4, 1994.

Hall-Ellis, Sylvia D. *Shaking the Money Tree - Part I: Preparing Successful Grant Applications.* Sponsored and hosted by the Office of Library Media Services, Donna Independent School District, Donna, Tex., February 4, 1994.

GRADUATE COURSES TAUGHT

San José State University, School of Library and Information Science
INFO 249 – Advanced Cataloging and Classification (Fall 2015, 2016; Summer 2016)
INFO 287 – Special Topics in Cataloging and Classification (Spring 2017, 2018, 2019, 2020, 2021, 2022, 2023; Fall 2020, 2021, 2022, 2023)
LIBR 248 – Beginning Cataloging and Classification (Summer 2002, 2003, 2004, 2005, 2006)
LIBR 249 – Advanced Cataloging and Classification (Summer 2003; Fall 2014; Summer 2015)

University of Denver, University College
Grant Writing Certificate Seminar for Non-Profit Organizations (Fall 2020, 2021; Spring 2021)

University of Denver, Morgridge College of Education HED
5991 – Grant Writing in Higher Education (Spring 2011)
LIS 4010 – Organization of Information (Fall 2002-2009; Winter 2005; Spring 2004-2006)
LIS 4020 – Professional Principles and Ethics (Summer 2000)
LIS 4040 – Management of Libraries and Information Centers (Fall 2010; Spring 2003, 2009 (DS); Winter 2005)
LIS 4070 – Cataloging and Classification (Winter 2008, 2009, 2010, 2011, 2012; Fall 2009 (DS)) LIS
4321 – Collection Management (Spring 2005)
LIS 4326 – LIS Research (Winter 2009 (DS); Spring 2009 (DS))
LIS 4350 – Adult Materials and Services (Summer 2006, 2009)
LIS 4379 – Social Sciences Resources (Spring 2009)
LIS 4400 – Cataloging and Classification (Spring 2000, 2001; Winter 2002-2009; Summer 2005, 2006 – course renumbered LIS 4070, September 2007)
LIS 4401 – Descriptive Cataloging (Winter 2001; Spring 2002, 2003, 2006-2009; Summer 2005)
LIS 4402 – Subject Cataloging (Spring 2001, 2009; Summer 2005, 2006, 2007, 2008)
LIS 4403 – Classification Schemes (Fall 2007, 2008, 2009 (DS)) LIS
LIS 4405 – Authority Control (Winter 2009)
LIS 4510 – Materials and Services for Children (Winter 2004; Summer 2005)
LIS 4620 – Grant Writing and Fundraising (Summer 2000, 2002, 2004, 2010; Winter 2006; Fall 2006-2009)
LIS 4700 – Seminar in Technical Services (Fall 2001)
LIS 4700 – Seminar in Public Libraries (Summer 2002)
LIS 4804 – Management of Electronic Records (Spring 2004; Fall 2005)
LIS 4902 – Capstone Projects (Winter 2003, Spring 2008, 2009, 2011)
LIS 4910 – Independent Study (every quarter Winter 2000 through Spring 2011)
LIS 4920 – Service Learning (every quarter Summer 2004 through Spring 2011)
RMS 4954 – Grant Writing (Summer 2013, 2014)
RMS 4959 – Content Analysis Methodology (Spring 2015)
QRM 4978 – Grant Writing (Summer 2011, 2012)

Rutgers University, School of Communication and Information
SC&I 522 – Cataloging and Classification (Summer 2013)

University of Arizona, College of Behavioral and Social Sciences
LIS 602 – Cataloging and Classification (Summer 1995)
LIS 612 – Advanced Online Search and Retrieval (Summer 1995)

Sam Houston State University, College of Education & Applied Science
LIS 532 - Cataloging and Classification (Fall 1993, 1994, 1995)
LIS 563 - Advanced Cataloging and Classification (Summer 1994)
LIS 567 - Research Methods (Spring 1994, Spring 1995)
LIS 591 - Educational Technology (Spring 1994, 1995)
LIS 596 - Networking and Computer Technologies in Education (Fall 1993, Summer 1994, Fall 1995)

Dissertations at the University of Denver

Bowers, Stacey L. *Library Anxiety of Law School Students: A Study Utilizing the Multidimensional Library Anxiety Scale.* Chair, May 5, 2010.

Fattor, Melissa M. *Student Engagement Differences by Ethnicity and Scale for Ninth Grade Students.* Chair, November 1, 2010.

Fulton, Roseanne. *A Case Study of Culturally Responsive Teaching in Middle School Mathematics.* Kent Seidel, Chair, June 18, 2009, Outside Chair.

Grealy, Deborah S. *Tribes and Territories in Library and Information Studies Education.* Bruce Uhrmacher, Chair, June 10, 2008, Committee Member.

McCord, J. Michael. *Developing a Standard of Care for Educational Malpractice.* Chair, April 15, 2011.

Priebe, Sarah J. *Distinguishing Effects of Domain and General Knowledge on Passage Fluency and Comprehension.* Jan Keenan, Chair. July 21, 2011, Outside Chair.

Snyder-Mondragon, Sandra M. *Institutional Factors that Impact the Retention of Graduate Students of Color in Schools of Library and Information Science: A Metaregression of Accredited Library School Statistics on Student Retention and Graduation Rates.* Kathy Green, Chair, July 24, 2009, Committee Member.

Taylor, Karen Pickles. *Effective Teaching.* Elinor Katz, Chair, July 15, 2009, Outside Chair.

Thompson, Jennifer. *Distinguishing a Western Women's College: A History of the Curriculum and Student Experience at Colorado Women's College.* Edith W. King, Chair, July 16, 2010, Committee Member.

Walker, Emelda. *Influence of Organizational Factors on Job Satisfaction of Disability Service Providers at Postsecondary Institutions.* Chair, April 29, 2010.

Dissertation Proposals at the University of Denver

Bowers, Stacey L. *Library Anxiety of Law School Students: A Study Utilizing the Multidimensional Library Anxiety Scale.* Chair, November 5, 2009.

McCord, J. Michael. *Developing a Standard of Care for Educational Malpractice.* Edith W. King, Chair. April 23, 2010.

Thompson, Jennifer. *History of Colorado Women's College.* Edith W. King, Chair, October 30, 2008. Committee Member.

Walker, Emelda. *Influence of Organizational Factors on Job Satisfaction of Disability Service Providers at Postsecondary Institutions.* Chair, July 21, 2009.

Dissertations at Other Institutions

Rodríguez-Mori, Howard. *The Information Behavior of Puerto Rican Immigrants to Central Florida, 2003-2009: Grounded Analysis of Six Case Studies Use of Social Networks during the Migration Process.* Kathleen Burnett, Chair, April 10, 2009, Florida State University, Committee Member.

Schwartz, Brian *More than a Look-up Skill: Medical Information Literacy Education in Osteopathic Medical Schools.* D. Mirah Dow, Chair, July 18, 2017. Emporia State University, Committee Member.

Snow, Karen. *A Study of the Perception of Cataloging Quality among Catalogers.* Shawne D. Miksa, Chair, August 1, 2011. University of North Texas, Committee Member.

Dissertation Proposals at Other Institutions

Schwartz, Brian *More than a Look-up Skill: Medical Information Literacy Education in Osteopathic Medical Schools.* D. Mirah Dow, Chair, December 4, 2015. Emporia State University, Committee Member.

Snow, Karen. *A Study of the Perception of Cataloging Quality among Catalogers.* Shawne D. Miksa, Chair, May 11, 2010. University of North Texas, Committee Member.

Master's Thesis at the University of Denver

Hemingson, Jeff. *Recital Paper.* Lamont School of Music, February 2010, Outside Chair.

Capstones at the University of Denver

Anthony, Alisa. *Correlation of Library and Information Science Program outcomes and Vacant Position Qualifications Listed on the Colorado State Library Jobline by Employers During the Period September 1, 2000 through August 31, 2002.* Chair, Winter Quarter, 2003.

Borden, Donna M. *Improving Emergency Communications Systems: Is a Radio Communications Network the Answer?* Fall Quarter, 2014.

Bowden, Heather L.M. *Exploring Biological Models for Long-term Data Preservation.* Chair, Spring Quarter, 2008.

Casenada, Cassandra Y. *Challenges to the Recruitment, Education, and Retention of Librarians of Color*. Chair, Spring Quarter, 2008.

Chang, Jennifer C. *Legal Research Practice and Preference: A Law Firm Perspective.* Chair, Spring Quarter 2011.

Ellis, Megan S. Fitzgerald. *Design of a Public Library Adult Volunteer Recruitment Program and Training Curriculum.* Chair, Winter Quarter, 2003.

Kircher, Kathy. *Development of a Library Pathfinder for Exobiology and Posting it on the Internet.* Chair, Winter Quarter, 2003.

Melhado, Loretta. *Design of St. John's Episcopal Church Library.* Chair, Spring Quarter, 2008.

Radcliff, Kathy. *Original Cataloging of Archival materials in the HERS Collection in Penrose Library.* Chair, Winter Quarter, 2003.

Sass, Carol Ann. *ACT Periodical Index: Access to Catholic Thinking Periodical Index: Web Index to Select Catholic Periodicals.* Spring Quarter 2000.

Stone, Sergio D. *Conducting Community Analysis for the Bemis Public Library (Littleton, Colorado) Using 2002 U.S. Census Data and the Online Outcome-Based Evaluation Toolkit.* Chair, Winter Quarter, 2003.

Tureson, Tamara. *Design and Use of an Information Audit Tool for Use in a Law Library.* Chair, Winter Quarter, 2003.

Tweed, Beth. *Evaluation of Email Reference Service in a Consumer Health Library Environment.* Chair, Winter Quarter, 2003.

GRANTS AND CONTRACTS

Student Learning in Agriculture STEM through Teacher Professional Development. Research team: Stanton Gartin (PI) and Cyndi Hofmeister, Northeast Junior College; Jeff Cash, Cheryl Sánchez, Anne-Marie Crampton, Lamar Community College; Suzanna Spears, Morgan Community College; Jack Wiley, Kerry Gabrielson, Trinidad State Junior College; Michael J. Miller, Colorado State University; Michael Womochil (Co-PI), Casey Sacks, and Sylvia D. Hall-Ellis, Colorado Community College System. U.S. Department of Agriculture, Agriculture and Food Research Initiative, Food, Agriculture, Natural Resources and Human Sciences Education and Literacy Initiative, $404,460 (2017-2020)

Leading and Achieving: the Colorado Agriculture Regional Consortium. Research team: Jack Wiley (PI), Kerry Gabrielson, Trinidad State Junior College; Jeff Cash (PI), Cheryl Sánchez, Anne-Marie Crampton, Lamar Community College; Suzanna Spears, Morgan Community College; Cyndi Hofmeister, Northeast Junior College; Michael Womochil (Co-PI), Casey Sacks, and Sylvia D. Hall-Ellis, Colorado Community College System. U.S. Department of Agriculture, Hispanic Serving Institutions Education Grants Program, $504,414 (2017-2020)

Cyber Prep Program Planning Grant. Research team: Debbie Sagen (PI), Brenda Lauer, Pikes Peak Community College; Gretchen Martin, Koiosa Insights; and, Sylvia D. Hall-Ellis, Colorado Community College System. U.S. Department of Commerce, Regional Alliances and Multi-stakeholder Partnerships to Stimulate (RAMPS) Cybersecurity Education and Workforce Development, $199,681 (2016-2018)

Career and Technical Education in Colorado: Pathways to Education and Employment. Research team: Heather McKay (PI), Rutgers University; Sarah Heath, Casey Sacks, Sylvia D. Hall-Ellis, Colorado Community College System. U.S. Department of Education, Institute of Education Sciences, $1,400,000 (2017-2021)

Pre-Alliance Planning Grant Colorado Community College Alliance. Research team: Victor Vialpondo (PI) and Janel Highfill, Community College of Aurora; Heidi Loshbaugh (Co-PI), Community College of Denver; Rick Reeves, Bill McGreevy, Liz Cox, and Kristin Aslin, Red Rocks Community College; Cathy Pellish, Front Range Community College; Samuel DeVries, Arapahoe Community College; Sylvia D. Hall-Ellis, Colorado Community College System. National Science Foundation, Louis Stokes Alliance for Minority Participation (LSAMP), $86,817 (2016-2017)

Towards Scalable Differentiated Instruction Using Technology-enabled, Competency-based, Dynamic Scaffolding. Research team: Karen Wilcox (PI) and Vijay Kumar, Center for Computational Engineering, Massachusetts Institute of Technology; Flora McMartin, Broad-based Knowledge; Quinsigamond Community College; and, Casey Sacks, and Sylvia D. Hall-Ellis, Colorado Community College System. U.S. Department of Education, First in the World Developmental Grant, $2,891,882 (2015-2019)

Colorado Strategic Partnerships Emergency Grant. Research team: Elise Lowe-Vaughn (PI), Amy Hodson, Celia Hardin, Barbara McBride, James Newby, Christopher Dewhurst, Nina Holland, Kate Anderson, MaryAnn Roe, Chrystalynn Chrystalynn, Elaine Edon, Mona Barnes, Tom Morgan, Rob Hanni, and Marie Valenzuela, Colorado Department of Labor and Employment; Steve Anton, Joelle Brouner, and, Katie Griego, Colorado Department of Human Services; Rebecca Holmes, Judith Martinez, and Jennifer Jirous, Colorado Department of Education; Emily Templin Lesh, Colorado Workforce Development Council; Cory Everett, Colorado Department of Regulatory Agencies; and, Casey Sacks and Sylvia D. Hall-Ellis, Colorado Community College System. U.S. Department of Labor, Strategic Partnerships Emergency Grant, $5,000,000 (2015-2017)

CAEL Jump Start Program: Competency-Based Education. Research team: Jerry Migler (PI), Casey Sacks, Debra Cohn, Thomas Hartman, and Sylvia D. Hall-Ellis, Colorado Community College System; Matt Jamison, Front Range Community College; Mike Coste, Red Rocks Community College; Amanda Corum, Pueblo Community College; Janet Colvin, Pikes Peak Community College; and, MaryAnn Matheny, Community College of Denver. Council for Adult and Experiential Learning, $15,000 (2015)

Summit on the Redesign of Developmental Education. Research team: Jerry Migler (PI), Casey Sacks, and Sylvia D. Hall-Ellis, Colorado Community College System; Chip Nava, Pueblo Community College; Kim Moultney, Arapahoe Community College; Debbie Ulibarri, Trinidad State Junior College; and, Kris Bernard, Front Range Community College. American Association of Community Colleges, $15,000 (2015-2016)

Equity in Excellence at Colorado Community Colleges. Research team: Keith Howard (PI) and Sylvia D. Hall-Ellis, Colorado Community College System; Estela Mata Bensimon, Center for Urban Education, University of Southern California; and Kerry Gabrielson, Trinidad State Junior College. Colorado Department of Higher Education, Colorado Opportunity Scholarship Program, $150,000 (2015-2016)

MBA High School of Business in Colorado. Research team: Laurie Urich (PI) and Sylvia D. Hall-Ellis, Colorado Community College System; Rudolph Sumpter and Beatrice Gerrish, Boulder Valley Schools; Keith Curry Lance, RSL Research Group. Colorado Department of Higher Education, Colorado Opportunity Scholarship Program, $501,295 (2015-2016)

Fullbridge Program in Colorado. Research team: Keith Howard (PI) and Sylvia D. Hall-Ellis, Colorado Community College System; Suzanna Spears, Fort Morgan Community College; and, Cheryl Sánchez and Anne-Marie Compton, Lamar Community College. Colorado Department of Higher Education, Colorado Opportunity Scholarship Program, $300,000 (2015-2017)

Colorado Community College System Alternative Credit Program. Research team: Jerry Migler (PI), Keith Howard, and Sylvia D. Hall-Ellis, Colorado Community College System. American Council on Education, $13,000 (2015)

Internationalization in Higher Education. Researcher: Samuel D. Museus. Technical reviewer for MCE: Sylvia D. Hall-Ellis. University of Denver, Office of Internationalization, $8,000 (2014-2015)

International Perspectives on Bilingual Education. Researcher: Sharolyn Pollard-Durodola. Technical reviewer for MCE: Sylvia D. Hall-Ellis. University of Denver, Office of Internationalization, $3,700 (2014-2015)

Cultivating Culturally Relevant and Responsive Curriculum and Pedagogy in College. Researcher: Samuel Museus. Technical reviewer for MCE: Sylvia D. Hall-Ellis. University of Denver, iRise Grant, $5,000 (2014-2015)

Project EMERGE (Educational Model for Evaluation and Replicability in Gifted Environments). Research team: Norma Hafenstein (PI) and Bruce Uhrmacher. Technical reviewer for MCE: Sylvia D. Hall-Ellis. Lynde and Harry Bradley Foundation, $235,000 (2014-2015)

Collecting Asian American Refugee Stories. Researcher: Samuel Museus. Technical reviewer for MCE: Sylvia D. Hall-Ellis. American Educational Research Association, Research Grant, $5,000 (2014-2015)

Developing Expertise in Teaching K-5 Mathematics. Research team: Julie Sarama (PI) and Douglas H. Clements (Co-PI), in partnership with the School of Education at the University of Michigan. Technical reviewer for MCE: Sylvia D. Hall-Ellis. National Science Foundation, $130,344 (2013-2015)

Investigation of the Long-Term Outcomes for Special Education Students. Researcher: Antonio Olmos-Gallos. Technical reviewer for MCE: Sylvia D. Hall-Ellis. Jefferson County School District, Office of Assessment, $40,000 (2014)

Refugee Community Collaboration. Researcher: Vicki Tomlin (PI) in partnership with the African Community Center and Jewish Family Service. Technical reviewer for MCE: Sylvia D. Hall-Ellis. University of Denver, Center for Community Engagement and Service Learning, $14,854 (2014-2015)

Access to Mathematics for All. Research team: Richard S. Kitchen (PI), Nicole M. Russell (Co-PI), and Terrence Blackman (Co-PI), Curriculum Studies and Teaching Program, Morgridge College of Education; Álvaro Árias (Co-PI, Department of Mathematics); and, James Gray (Co-PI), Department of Mathematics, Community College of Aurora. Technical reviewer for MCE: Sylvia D. Hall-Ellis. National Science Foundation, The Robert Noyce Scholarship Program, Capacity Building Project, $349,926 (2014-2016)

Cognitive Test Battery for Intellectual Disabilities. Research team: Karen Riley (PI), Lyndsay Agans, Jessica Lerner, and Karin Dittrick-Nathan in partnership with David Hessl (PI), The MIND Institute at the University of California – Davis, and Elizabeth Berry-Kravis, Rush University Medical Center. Technical reviewer for MCE: Sylvia D. Hall-Ellis. National Institutes of Health, Outcome Measures for Use in Treatment Trials for Individuals with Intellectual and Developmental Disabilities (R01), $2,499,996 ($588,672 at DU) (2014- 2019)

Broadening Participation in Engineering among Women and Latino/as: A Longitudinal, Multi-Site Study. Researcher: Patton Garriott (PI) in partnership with the University of North Dakota and the University of Missouri. Technical reviewer for MCE: Sylvia D. Hall-Ellis. National Science Foundation, HER Core Research, $677,390 ($69,992 at DU) (2014-2019)

Designing a Teacher Evaluation System to Improve Teacher Effectiveness for Culturally and Linguistically Diverse Learners. Research team: María del Carmen Sálazar (PI), Jessica Lerner, and Kathy Green. Technical reviewer for MCE: Sylvia D. Hall-Ellis. University of Denver, Professional Research Opportunities for Faculty, $29,988 (2014-2016)

Developing a College-Going Culture in Latina/O Families: Exploring the Influence of Funds of Knowledge on Family Outreach Programs. Researcher: Judy Marquez Kiyama. Technical reviewer for MCE: Sylvia D. Hall-Ellis. University of Denver, Professional Research Opportunities for Faculty, $18,720 (2014-2016)

Assessment of Quality of Life in Neutral Implantation Surgery for the Treatment of Parkinson's Disease. Researcher: Cynthia McRae. Technical reviewer for MCE: Sylvia D. Hall-Ellis. University of Denver, Office of Internationalization, $3,967 (2014-2015)

Pura Vida: Cloud Forest, Curriculum and Cross-Cultural Study. Research team: Norma Hafenstein (PI) and Bruce Uhrmacher (Co-PI). Technical reviewer for MCE: Sylvia D. Hall-Ellis. University of Denver, Office of Internationalization, $8,000 (2014-2015)

Online Course Development for Curriculum and Instruction. Researcher: Ruth Chao. Technical reviewer for MCE: Sylvia D. Hall-Ellis. University of Denver, Office of Teaching and Learning, $3,000 (2014)

Online Course Development for Curriculum and Instruction. Researcher: María del Carmen Sálazar. Technical reviewer for MCE: Sylvia D. Hall-Ellis. University of Denver, Office of Teaching and Learning, $3,000 (2014)

Online Course Development for Curriculum and Instruction. Researcher: Jessica Lerner. Technical reviewer for MCE: Sylvia D. Hall-Ellis. University of Denver, Office of Teaching and Learning, $3,000 (2014)

Online Course Development for Curriculum and Instruction. Researcher: Duan Zhang. Technical reviewer for MCE: Sylvia D. Hall-Ellis. University of Denver, Office of Teaching and Learning, $3,000 (2014)

The Mathematics Education of African Americans, 1866 – 1954. Researcher: Nicole M. Russell. Technical reviewer for MCE: Sylvia D. Hall-Ellis. National Academy of Education, Spencer Foundation Postdoctoral Fellowship, $55,000 (2014-2016)

Early Childhood Care and Education Study. Research team: Carrie Germeroth (PI), Melissa Mincic, and Douglas H. Clements. Technical reviewer for MCE: Sylvia D. Hall-Ellis. State of North Dakota, Department of Public Instruction, $73,500 (2013-2014)

Graduate Level Specialty in Addiction Counselor Training with Emphasis on Integration of Native American Specific Content. Research team: Ruth Chao (PI) and Michael J. Faragher (Co-PI). Technical reviewer for MCE: Sylvia D. Hall-Ellis. The Galena Foundation, $289,732 (2013-2016)

The Collecting Asian American and Pacific Islander Refugee Stories (CARS) Project. Researcher: Samuel Museus. Technical reviewer for MCE: Sylvia D. Hall-Ellis. University of Denver, Center for Community Engagement and Service Learning, $15,000 (2014)

Parents in Transition: A Multiple Case Study of Parent and Family Orientation Programs. Researcher: Judy Marquéz Kiyama. Technical reviewer for MCE: Sylvia D. Hall-Ellis. University of Denver, Faculty Research Fund, $1,500 (2014-2015)

The Sistah Network: Black Women Graduate Students Supporting and Retaining Each Other. Researcher; Nicole M. Russell. Technical reviewer for MCE: Sylvia D. Hall-Ellis. University of Denver, Faculty Research Fund, $2,708 (2014-2015)

Evaluation of the Northeast Denver Babies Ready for College Program. Research team: Carrie Germeroth (PI), Melissa Mincic, and Douglas H. Clements. Technical reviewer for MCE: Sylvia D. Hall-Ellis. Mile High Montessori, $9,922 (2013-2014)

Developing Teaching Expertise in K-5 Mathematics. Research team: Julie Sarama (PI) and Douglas Clements (University of Denver), in partnership with Timothy Boerst (PI), Meghan Shaughnessy, Deborah Ball, Hyman Bass (School of Education at the University of Michigan). Technical reviewer for MCE: Sylvia D. Hall-Ellis. National Science Foundation, $449,827 ($130,344 at the University of Denver (2013-2015)

Early Learning Care and Education Study Program Grant for the State of North Dakota. Research team: Carrie Germeroth (PI), Melissa Mincic, and Sheridan Green. Technical reviewer for MCE: Sylvia D. Hall-Ellis. State of North Dakota Department of Public Instruction, $73,500 (2013-2014)

Local Professional Learning Community for School Leaders. Research team: Susan Korach (PI), Kristina Hesbol, and Rebecca McClure. Technical reviewer for MCE: Sylvia D. Hall-Ellis. Education Development Center, $10,950 (2013)

Healthy Eaters, Lifelong Movers 2: Implementing Evidence-Based School Environment, Policy, and Curricular Changes to Increase Opportunities for Healthy Eating and Physical Activity in Low Income, Rural Colorado. Research team: Elaine Berlansky, University of Colorado at Denver (PI), Nicholas Cutforth, University of Denver (Co-PI), and Allison Reeds. Technical reviewer for MCE: Sylvia D. Hall-Ellis. Colorado Health Foundation, $3,103,108 (2013-2017)

Hughes Rare Books Library Room Renovation in the Sturm College of Law. Project team: Patti H. Marks, Sylvia D. Hall-Ellis, and Leigh Elliott. Mabel T. Hughes Charitable Trust, $34,000 (2013-2014)

The Promise Center Partnership with the Marsico Institute for Early Learning and Literacy and the City and County of Denver. Research team: Karen Riley (PI), Douglas H. Clements (Co-PI), and Sheridan Green. Technical reviewer for MCE: Sylvia D. Hall-Ellis. The Piton Foundation, $223,468 (2013-2014)

Center of Excellence for Problem Gambling. Research team: Ruth Chao (PI) and J. Mike Faragher. Technical reviewer for MCE: Sylvia D. Hall-Ellis. Colorado Department of Behavioral Health, $68,021 (2012-2013)

United Way Implementation and Validation Review. Research team: Douglas H. Clements (PI), Amanda Moreno, and Sheridan Green. Technical reviewer for MCE: Sylvia D. Hall-Ellis. Mile High United Way, $19,737 (2013)

Math/Science Partnership in Rural Districts. Research team: Kristen Bunn (PI, Eagle County Schools), Paul Michalec (Co-PI), and Alegra Reiber. Technical reviewer for MCE: Sylvia D. Hall-Ellis. Colorado Department of Education, Colorado's Mathematics and Science Partnership Program, $750,000 (2013-2014)

Mathematics and Science Education of African Americans. Research team: Nicole Russell (PI), Sylvia D. Hall-Ellis, Steve Fisher (Penrose Library). Technical reviewer for MCE: Sylvia D. Hall-Ellis. University of Denver, Professional Research Opportunities for Faculty, $29,994 (2013-2015)

Online Course Development for Curriculum and Instruction. Researcher: Nicole Russell. Technical reviewer for MCE: Sylvia D. Hall-Ellis. University of Denver, Office of Teaching and Learning, $3,000 (2013)

Discourse and Opportunity: Undocumented Students and Higher Education Policy. Researcher: Ryan Gildersleeve. Technical reviewer for MCE: Sylvia D. Hall-Ellis. National Academy of Education, Spencer Foundation Postdoctoral Fellowship, $55,000 (2012-2014)

An Anthropological Study of the Latino Graduation Ceremony. Researcher: Ryan Gildersleeve. Technical reviewer for MCE: Sylvia D. Hall-Ellis. Spencer Foundation, $39,900 (2012-2013)

Fragile-X and Pharmaceutical Company: Clinical Trial of AFQ056. University of California – Davis Children's Hospital MIND Institute (Sacramento), Children's Hospital Denver, and Rush Children's Hospital at Rush University Medical Center (Chicago). Karen Riley, PI. Technical reviewer for MCE: Sylvia D. Hall-Ellis. Novartis Pharmaceuticals Corporation, $394,206 (2012-2014)

Project Engage, Phase 2, a DAPRA Grant in partnership with Total Immersion Systems, Inc., and Texas A&M University. Research team: Karen Riley (PI) and Lyndsay Agans (Co-PI). Technical reviewer for MCE: Sylvia D. Hall-Ellis. U.S. Department of Defense, $60,000 (2011-2013)

International School Psychology Practicum Exchange. Researcher: Gloria L. Miller. Technical reviewer for MCE: Sylvia D. Hall-Ellis. University of Denver, Center for Community Engagement and Service Learning, $14,951 (2012-2013)

Online Course Development for Curriculum and Instruction. Research team: Bruce Uhrmacher (PI) and Norma Hafenstein (Co-PI). Technical reviewer for MCE: Sylvia D. Hall-Ellis. University of Denver, Office of Teaching and Learning, $18,193 (2012-2014)

Writers in the Schools. Research team: Karen Riley (PI) and Amanda Moreno (Co-PI).Technical reviewer for MCE: Sylvia D. Hall-Ellis. Colorado Humanities, $4,965 (2012-2013)

Learning Ecosystem Validation Grant. Research team: Karen Riley (PI), Lyndsay Agans, Kent Seidel, and Shimelis Assefa. Technical reviewer for MCE: Sylvia D. Hall-Ellis. Bill & Melinda Gates Foundation, $315,000 (2012-2013)

Project Words of Oral Reading and Language Development (WORLD). Research team: Jorge E. Gonzalez (PI), Texas A&M University; Laura Saenz (Co-PI), University of Texas – Pan American; and, Sharolyn Pollard-Durodola (Co-PI), University of Denver. Technical reviewer for MCE: Sylvia D. Hall-Ellis. U.S. Department of Education, Institute of Education Sciences, $53,354 (2012-2015); award $640,718, transfer from Texas A&M University

Increasing the Efficacy of an Early Mathematics Curriculum with Scaffolding Designed to Promote Self-Regulation. Research team: Douglas H. Clements (PI) and Julie Sarama (Co-PI). Technical reviewer for MCE: Sylvia D. Hall-Ellis. U.S. Department of Education, Institute of Education Sciences, $1,445,315 (2008-2014); award $4,541,975, transfer from University at Buffalo, The State University of New York

Using Rule Space and Poset-based Adaptive Testing Methodologies to Identify Ability Patterns in Early Mathematics and Create a Comprehensive Mathematics Ability Test. Research team: Douglas H. Clements (PI) and Julie Sarama (Co-PI). Technical reviewer for MCE: Sylvia D. Hall-Ellis. National Science Foundation, $323,791 (2010-2014); award $1,194,944, transfer from University at Buffalo, The State University of New York

Comprehensive Postdoctoral Training in Scientific Education Research. Researcher: Julie Sarama (PI). Technical reviewer for MCE: Sylvia D. Hall-Ellis. U.S. Department of Education, Institute of Education Sciences, $133,458 (2010-2014); award $613,353, transfer from University at Buffalo, The State University of New York

Longitudinal Study of a Successful Scaling Up Project: Extending TRIAD. Research team: Douglas H. Clements (PI), Julie Sarama (Co-PI), and Abt Associates (Carolyn Layzer, Fatih Unlu, Laurie Bozzi, Lily Fesler, Alina Martinez, Cristofer Price, James van Orden). Technical reviewer for MCE: Sylvia D. Hall-Ellis. Institute of Education Sciences, $384,940 (2011-2015; award $1,250,286, transfer from University at Buffalo, The State University of New York

Early Childhood Education in the Context of Mathematics, Science, and Literacy. Research team: Julie Sarama (PI), Douglas H. Clements (Co-PI). Technical reviewer for MCE: Sylvia D. Hall-Ellis. National Science Foundation, $990,020 (2010-2014; award $2,285,228, transfer from University at Buffalo, The State University of New York

Early Childhood Clearinghouse Information Center Redesign. Research team: Karen Riley (PI) and Amanda Moreno (Co-PI).Technical reviewer for MCE: Sylvia D. Hall-Ellis. Office of the Lt. Governor of Colorado, $12,000 (2012-2013)

Morgridge Rural Educational Leadership Initiative. Research team: Lyndsay Agans (PI), Linda Brookhart (Co-PI), Susan Korach, and Rebecca McClure. Technical reviewer for MCE: Sylvia D. Hall-Ellis. Morgridge Family Foundation, $100,000 (2012-2014)

Center of Excellence for Problem Gambling. Research team: Patrick Sherry (PI) and J. Mike Faragher. Technical reviewer for MCE: Sylvia D. Hall-Ellis. Colorado Department of Behavioral Health, $55,000 (2012-2013)

Intermodal Transportation Institute Research Initiatives. Researcher: Patrick Sherry. Technical reviewer for MCE: Sylvia D. Hall-Ellis. University Transportation Centers Program, Research and Innovative Technology Administration, U.S. Department of Transportation. $600,000 (2012-2014)

Mile High United Way Social Innovation Fund Early Literacy Initiative. Gloria L. Miller, PI, Amanda Moreano, Kim Hartnett-Edwards, and Sheridan Green. Technical reviewer for MCE: Sylvia D. Hall-Ellis. Mile High United Way, $89,992 (2012-2013)

International School Psychology Practicum Exchange. Researcher: Gloria L. Miller. Technical reviewer for MCE: Sylvia D. Hall-Ellis. University of Denver, Center for Community Engagement and Service Learning, $1,000 (2012-2013)

Refugee Student Art Outreach. Researcher: Karin Dittrick-Nathan. Technical reviewer for MCE: Sylvia D. Hall-Ellis. University of Denver, Faculty Research Fund, $3,000 (2012-2013)

Resistance, Resilience, and Reciprocity: Centering the Voices of Black Doctoral Women with Faculty Aspirations. Researcher: Nicole M. Russell. Technical reviewer for MCE: Sylvia D. Hall-Ellis. University of Denver, Faculty Research Fund, $2,965 (2012-2013)

Assessing Learning through Student Notebooks. Research team: Keith Miller, Nancy Sasaki, and Kathy Green. Technical reviewer for MCE: Sylvia D. Hall-Ellis. University of Denver, Professional Research Opportunities for Faculty, $30,000 (2012-2014)

International School Psychology Practicum Exchange. Researcher: Gloria L. Miller. Technical reviewer for MCE: Sylvia D. Hall-Ellis. University of Denver, Office of Internationalization, $2,000 (2012-2013)

ELO in Colorado. Research team: Cynthia Hazel and Duan Zhang. Technical reviewer for MCE: Sylvia D. Hall-Ellis. Colorado Legacy Foundation, $150,000 (2012-2013)

Creating Online LIS Courses. Research team: Mary C. Stansbury (PI), Shimelis Assefa, Denise Anthony, Xiao Hu, and Krystyna Matusiak. Technical reviewer for MCE: Sylvia D. Hall-Ellis. University of Denver, Center for Teaching and Learning, $15,000 (2011-2013)

Maritime Piracy Seminar. Researcher: Ved Nanda, The Nanda Center, Sturm College of Law. Technical reviewer for Sturm College of Law: Sylvia D. Hall-Ellis. Arsenault Family Foundation, $15,000 (2012-2013).

Early Childhood Librarianship: An Interdisciplinary, Experiential Learning MLIS. Researcher: Mary C. Stansbury (PI). Technical reviewer for MCE: Sylvia D. Hall-Ellis. Laura Bush's 21st Century Librarians Program, Institute for Museums and Library Services, $249,066 (2012-2014)

Learning Ecosystem Planning Grant. Research team: Karen Riley (PI), Lyndsay Agans, Kent Seidel, and Shimelis Assefa. Technical reviewer for MCE: Sylvia D. Hall-Ellis. Bill & Melinda Gates Foundation, $281,217 (2011-2012)

Advanced Service Learning Practitioner Faculty Grant, Sylvia D. Hall-Ellis, University of Denver, Center for Community Engagement and Service Learning, $400 (2011)

Evaluating and Enhancing the EspeciallyMe Program. Research team: Lori D. Patton and Nicole Russell. Technical reviewer for MCE: Sylvia D. Hall-Ellis. University of Denver, Center for Community Engagement and Service Learning, Public Good Fellowship Grant, $24,780 (2012)

Choosing Excellence: Let Every Child Bloom. Research team: Shimelis Assefa (PI) and Mary C. Stansbury (Co-PI). Technical reviewer for MCE: Sylvia D. Hall-Ellis. University of Denver, Center for Community Engagement and Service Learning, Public Good Grant, $7,657 (2012)

K-8 STEM Content Specific Professional Development to Improve Elementary Student Achievement. Research team: Kent Seidel (PI), Nicole Russell (Co-PI), Kimberly Hartnett-Edwards, Paul Michalec, Jeff Farmer, Keith Miller, Alegra Reiber, and Nancy Sasaki. Technical reviewer for MCE: Sylvia D. Hall-Ellis. Colorado Department of Education, Improving Teacher Quality Grant, (Title II ESEA), $307,299 (2011-2012)

Building a Better Principal Pipeline to Boost Student Achievement. Researcher: Susan Korach. Technical reviewer for MCE: Sylvia D. Hall-Ellis. Denver Public Schools; a subcontract from the Wallace Foundation Grant, $170,000 (2011-2017)

Center of Excellence for Problem Gambling. Research team: J. Mike Faragher (Co-PI) and Bobbie Vollmer (PI). Technical reviewer for MCE: Sylvia D. Hall-Ellis. Colorado Department of Behavioral Health, $79,999 (2011-2012)

An Exploration of Novice Teachers' Core Competencies: Impacts on Student Achievement, and Effectiveness of Preparation. Research team: Kent Seidel (PI), Kathy Green (Co-PI), Kimberly Hartnett-Edwards, and Duan Zhang. Technical reviewer for MCE: Sylvia D. Hall-Ellis. Institute of Education Sciences, Effective Teachers and Effective Teaching, $990,987 (2012-2015)

Project Engage, a DAPRA Grant in partnership with Total Immersion Systems, Inc., and Texas A&M University. Research team: Karen Riley (PI) and Lyndsay Agans (Co-PI). Technical reviewer for MCE: Sylvia D. Hall-Ellis. U.S. Department of Defense, $49,964 (2011-2014)

User-centered Evaluation of Music Search Engines. Researcher: Xiao Hu. Technical reviewer for MCE: Sylvia D. Hall-Ellis. University of Denver, Faculty Research Fund, $2,931 (2011-2012)

Educational Practicum in Vietnam and China to Promote the Inclusion of Young Children with Disabilities. Researcher: Gloria L. Miller. Technical reviewer for MCE: Sylvia D. Hall-Ellis. University of Denver, Office of Internationalization, $5,000 (2011-2012)

Evaluation of Colorado's Enhancing Quality in Infant-Toddler (EQIT) Initiative. Research team: Virginia R. Maloney and Amanda Moreno. Technical reviewer for MCE: Sylvia D. Hall-Ellis. Buell Foundation, $395,884 (2011-2013)

Creating Engaging Environments to Teach Pre-Algebra Mathematics to Elementary Students. Research team: Álvaro Arias, Mario López, María del Carmen Salazar, and Lyndsay Agans. Technical reviewer for MCE: Sylvia D. Hall-Ellis. University of Denver Interdisciplinary Grant, $60,000 (2011-2012)

Morgridge Education Technology Accessible (META) Resource Project. Research team: Lyndsay Agans (PI) and Shimelis Assefa (Co-PI). Technical reviewer for MCE: Sylvia D. Hall-Ellis. Morgridge Family Foundation, $36,000 (2011)

MCE Connect: A 21st Century Framework for Faculty Development. Research team: Bruce Uhrmacher (PI), Shimelis Assefa (Co-PI), Lyndsay Agans (Co-PI), Kimberly Hartnett-Edwards, Norma Hafenstein, Xiao Hu, Paul Michalec (Co-PI), María del Carmen Salazar (Co-PI), and Sandra Snyder-Mondragon. Technical reviewer for MCE: Sylvia D. Hall-Ellis. University of Denver, Center for Teaching and Learning, $22,355 (2011-2012)

Parent Education and Parent Leadership and Advocacy. Research team: Virginia Maloney (PI) and Amanda Moreno, Marsico Institute for Early Learning and Literacy. Technical reviewer for MCE: Sylvia D. Hall-Ellis. Colorado Health Foundation, $27,358 (2010-2011)

Intentional School Culture. Researcher: Cynthia Hazel. Technical reviewer for MCE: Sylvia D. Hall-Ellis. Denver Public Schools, $38,040 (2010-2011)

Healthy Eaters, Lifelong Movers: Implementing Evidence-Based School Environment, Policy, and Curricular Changes to Increase Opportunities for Healthy Eating and Physical Activity in Low Income, Rural Colorado. Research team: Elaine Berlansky, University of Colorado at Denver (PI), Nicholas Cutforth, University of Denver (Co-PI), and Allison Reeds. Technical reviewer for MCE: Sylvia D. Hall-Ellis. Colorado Health Foundation, $1,683,277 (2011-2014)

Second Life Learning Community. Research team: Don McCubbrey (PI), Sylvia D. Hall-Ellis (Co-PI), Walter LaMendola, and Paul Novak. University of Denver, Center for Teaching and Learning, $13,000 (2010-2011)

Reintroducing the Value of Law Librarians to Academic and Public Librarians in Colorado through the Identification and Use of Emerging Technologies. Research team: Sylvia D. Hall-Ellis (Co-PI), Stacey L. Bowers (PI), and Christopher Hudson, in partnership with Denver Public Library, Arapahoe Library District, and the Colorado State Supreme Court Library. University of Denver, Center for Community Engagement and Service Learning, $5,773 (2010-11)

Reintroducing the Value of Law Librarians to Public Librarians through the Identification and Use of Emerging Technologies and Resources. Research team: Stacey Bowers (PI) and Sylvia D. Hall-Ellis (Co-PI). American Association of Libraries, Wolters Kluwer Law & Business Grant Program, $2,725 (2010-2011)

Faculty Service Learning Pod. Research team: María del Carmen Salazar and Nicholas Cutforth (Curriculum and Instruction Program), Frank Tuitt (Higher Education Program), Cynthia Hazel and Gloria Miller (Child, Family, and School Psychology Program), and Sylvia D. Hall-Ellis (Library and Information Science Program). University of Denver, Center for Community Engagement and Service Learning, $8,000 (2010-2011)

Lincoln Collaborative. Research team: Antonio Esquibel (Principal, Lincoln High School), María del Carmen Salazar (Curriculum and Instruction Program), and. Sylvia D. Hall-Ellis. School Improvement Grant, Denver Public Schools, $375,000 (2010-2012)

Future LEADers of America: Leaders III. Research team: Denver Public Library (Kristen Svendson, PI), the University of Denver (Sylvia D. Hall-Ellis), the Colorado Chapter of REFORMA (Orlando Archibeque), and the Colorado Association of Libraries (Martin Garnar). Laura Bush's Recruiting Librarians for the 21st Century Program, Institute for Museums and Library Services, $988,366 (2009-2012)

Teaching for Success in the Library Environment: LIS 4030 in Library 2.0. Research team: Deborah S. Grealy (PI) and Sylvia D. Hall-Ellis (Co-PI). University of Denver, Center for Teaching and Learning, $ 9,350 (2009-10)

Writing Group Faculty Grant, Sylvia D. Hall-Ellis, University of Denver, Center for Community Engagement and Service Learning, $750 (2008-2009)

Collaborative Learning Faculty Grant, Sylvia D. Hall-Ellis, University of Denver, Center for Teaching and Learning, $1,500 (2008)

Connecting Information Literacy to Learning. Research team: Lori Micho, Merrie Valliant, Amanda Samland, and Sylvia D. Hall-Ellis. Colorado State Library, LSTA Discretionary Grant Program, $19,548 (2008-2009)

Law Librarianship Fellows Program. Research team: Sylvia D. Hall-Ellis (PI), Stacey Bowers (Co-PI), and Christopher Hudson, Westminster Law Library. Laura Bush's 21st Century Librarians Program, Institute for Museums and Library Services, $999,370 (2008-2012)

Grant Writing in a Cooperative Learning Environment. Sylvia D. Hall-Ellis. University of Denver, Center for Teaching and Learning, $2,000 (2008-2009)

Project Homeless Connect 6 Event Evaluation. Research team: Sylvia D. Hall-Ellis and Duan Zhang. University of Denver Center for Community Engagement and Service Learning, $9,785 (2008)

Project Ecuador: International Learning Service Libraries – A Faculty Development Experience in Ecuador. Sylvia D. Hall-Ellis, Office of Internationalization, University of Denver, $600 (2007)

Project Ecuador: International Learning Service Libraries – A Faculty Development Experience in Ecuador. Sylvia D. Hall-Ellis, International Service Learning Office, University of Denver, $400 (2007)

Project Homeless Connect 5 Event Evaluation. Research team: Sylvia D. Hall-Ellis and Duan Zhang. University of Denver Center for Community Engagement and Service Learning, $1,000 (2007)

Project Homeless Connect 4 Event Evaluation. Research team: Sylvia D. Hall-Ellis and Duan Zhang. University of Denver Center for Community Engagement and Service Learning, $4,595 (2007)

Future LEADers of America: Leaders II. Research team: Denver Public Library (Kristen Svendson, PI), the University of Denver (Sylvia D. Hall-Ellis), and the Colorado Chapter of REFORMA (Orlando Archibeque). Laura Bush's Recruiting Librarians for the 21st Century Program, Institute for Museums and Library Services, $988,518 (2007-2010)

Strategic Planning Assistance for the Denver Medical Library. Sylvia D. Hall-Ellis. Denver Medical Library, Inc., $30,000 (2006-2007)

Destiny Software for JMAC Student Lab. Sylvia D. Hall-Ellis, gift from the Sagebrush Corporation, Minneapolis, Minnesota, $10,000 (2006)

Libraries: Tools for Education and Development Worldwide: A Faculty Development Experience in France. Sylvia D. Hall-Ellis, Office of Internationalization, University of Denver, $800 (2005)

Denver Public Library: Opportunities for Change. Sylvia D. Hall-Ellis, Colorado Community Based Research Network, $2,000 (2005)

Future LEADers of America. Research team: Denver Public Library (Letty Icolari and Steve Taylor, PIs), Emporia State University (Jim Agee), and the University of Denver (Sylvia D. Hall-Ellis). Recruiting Librarians for the 21st Century Program, Institute for Museums and Library Services, $670,315 (2005-2008)

American Association of University Professors Summer Institute Professional Development Grant. Sylvia D. Hall-Ellis, American Association of University Professors, $300 (2005)

Beta Phi Mu Alumni Tea. Sylvia D. Hall-Ellis, gift from the Office of Alumni and Parent and Relations, University of Denver, $2,000 (2005)

Spectrum Software for LIS Student Lab. Sylvia D. Hall-Ellis, gift from the Sagebrush Corporation, Minneapolis, Minnesota, $5,000 (2005)

Developing Research Capacity in Community Organizations and Residents through Training and Technical Assistance. Nicholas J. Cutforth (PI) and Sylvia D. Hall-Ellis. Piton Foundation, $25,000 (2005-2006)

Libraries: Tools for Education and Development Worldwide: A Faculty Development Experience in Argentina. Sylvia D. Hall-Ellis, Office of Internationalization, University of Denver, $500 (2004)

Developing Research Capacity in Community Organizations and Residents through Training and Technical Assistance. Research team: Nicholas J. Cutforth (PI), Gary Lichtenstein and Sylvia D. Hall-Ellis, Piton Foundation, $25,000 (2003-2004)

Increasing Spanish-Speaking and Hispanic Diversity among Library and Information Science Students at the University of Denver: Development of a Student Recruitment Model. Researcher: Sylvia D. Hall-Ellis (PI), Office of Multicultural Excellence, University of Denver, $2,750 (2003-2004)

Collection Development Enrichment to Support the Cataloging & Classification Specialization and School Librarianship within the Library & Information Science Program at the University of Denver. Research team: Sylvia D. Hall-Ellis (PI) and Deborah S. Grealy. Women's Library Association, University of Denver, $4,000 (2003)

Collection Development Enrichment to Support the Library & Information Science Program at the University of Denver. Research team: Deborah S. Grealy (PI) and Sylvia D. Hall-Ellis. Women's Library Association, University of Denver, $4,000 (2001)

Wireless LAN for Library Education. Research team: Deborah S. Grealy (PI) and Sylvia Hall-Ellis. University of Denver, Center for Teaching and Learning, $24,000 (2001-2002)

Upward Bound – A Program for South Texas Youth. Research team: Monte Churchill, Executive Director of Community Relations; Gary R. Sauceda, Outreach Coordinator; Raymond Hernandez, (PI) Associate Dean for Student Success; and Sylvia D. Hall-Ellis, South Texas Community College (McAllen, Texas). U.S. Department of Education, Office of Postsecondary Education, $2,672,003 (1999-2003)

Write Now! Improving Elementary Students' Writing Skills. Research team: Caryl G. Thomason, Assistant Superintendent (PI); Karen Tankersley, Principal; and, Hal Anderson, Director of Technology, Cheyenne Mountain School District 12 (Colorado Springs, Colorado); and Sylvia D. Hall-Ellis. Colorado Department of Education, Educational Telecommunications Unit, $189,453 (1999-2001)

Operation Quick Start -- Distance Learning in Rural Colorado. Research team: Randal Weigum, Technology Coordinator (PI); Bonnie Barns, Director of Federal Programs and Staff Development; and, Adam "Joe" Raskop, Executive Director, Southeastern Board of Cooperative Educational Services (Lamar, Colorado); and Sylvia D. Hall-Ellis. Colorado Department of Education, Educational Telecommunications Unit, $400,000 (1999-2001)

Advanced Technological Training for Information Professionals for the 21st Century. Research team: Mario Reyna, Division of Business Director (PI) and Sylvia D. Hall-Ellis, South Texas Community College (McAllen, Texas). Phi Delta Kappa and the National Science Foundation, $250,000 (1999-2001)

Working Connections – Training Information Technologies Professionals for the 21st Century. Research team: Mario Reyna, Division of Business Director (PI) and Sylvia D. Hall-Ellis, South Texas Community College (McAllen, Texas). Microsoft Corporation and the American Association of Community Colleges, $1,147,775(1999-2001)

The ROAD (Research Oriented Amplification of Development to Literacy) Program. Research team: Deborah J. Leong (PI), Metropolitan State University; Elena Bodrova, Metropolitan State University; Dmitri Semenov, Robert J. Marzano, and Sylvia D. Hall-Ellis, Mid-continent Regional Educational Laboratory (Aurora, Colorado). Hewlett-Packard Foundation, $25,000 (1998-1999)

Press to Literacy. Research team: Deborah J. Leong (PI), Metropolitan State University; Elena Bodrova, Metropolitan State University; Dmitri Semenov, Robert J. Marzano, and Sylvia D. Hall-Ellis, Mid-continent Regional Educational Laboratory (Aurora, Colorado). The Denver Post and the Robert S. McCormick Foundation, $49,818 (1998-1999)

International Telementor Center. Research team: David Neils, David B. Frost (PI), and Sylvia D. Hall-Ellis, Mid-continent Regional Educational Laboratory (Aurora, Colorado). Hewlett-Packard Philanthropy, $100,000 (1998-1999)

America Reads: Providing Tutor Training for the America Reads Challenge. Research team: Louis F. Cicchinelli (PI) and Sylvia D. Hall-Ellis, Mid-continent Regional Educational Laboratory (Aurora, Colorado). U.S. Department of Education, Office of Educational Research and Improvement, $306,000 (1998-1999)

Comprehensive School Reform. Research team: Louis F. Cicchinelli (PI), J. Timothy Waters, and Sylvia D. Hall-Ellis, Mid-continent Regional Educational Laboratory (Aurora, Colorado). U.S. Department of Education, Office of Educational Research and Improvement, $285,000 (1998-1999)

Sustainable Energy Education (SEE) Program for Grades 4-8: Preparing Today's Youth for Lifelong Learning and Responsible Actions in Energy Conservation. Research team: Mary Gromko, Colorado Department of Education; Gene McCarthy, Rocky Flats Field Office, U.S. Department of Energy; Gina Kissell, National Renewable Energy Laboratory; and Barbara L. McCombs (PI), Janet L. Bishop, and Sylvia D. Hall-Ellis, Mid-continent Regional Educational Laboratory (Aurora, Colorado). State of Colorado Governor's Office for Energy Conservation, $499,936 (1997-1999)

Review of Kansas Curriculum Standards in Mathematics and Language Arts. Research team: Robert J. Marzano (PI), John S. Kendall, David B. Frost, and Sylvia D. Hall-Ellis, Mid-continent Regional Educational Laboratory (Aurora, Colorado). Submitted to the Kansas State Department of Education, $25,903 (1998)

International Telementor Center. Research team: David Neils, John Kuglin, Chris Rapp, David B. Frost (PI), and Sylvia D. Hall-Ellis, Mid-continent Regional Educational Laboratory (Aurora, Colorado). Hewlett-Packard Company, $54,752 (1998)

Genesis Mission: Education Public Outreach. Developed in partnership by the Jet Propulsion Laboratory, California Institute of Technology, Los Alamos National Laboratory, Lockheed Martin Astronautics, and the Mid-continent Regional Educational Laboratory (Aurora, Colorado). Research team: John T. Sutton (PI), Alice Krueger, Martha Henry, Greg Rawls, Shae Isaacs, Jeff Johnson, Deb Jordan, Arlene Mitchell, David B. Frost, Jana Caldwell, J. Timothy Waters, and Sylvia D. Hall-Ellis. National Aeronautics and Space Administration, $139,700,000; subcontract award, $4,750,000 (1997-2007)

North Dakota Mathematics Assessment Project. Developed in partnership by the North Dakota Department of Education and Mid-continent Regional Educational Laboratory (Mid-continent Regional Educational Laboratory). Research team: Ann Clapper, Clarence Bina, Greg Gallagher, North Dakota Department of Education; Don Burger (PI), Hillary Michaels, and Sylvia D. Hall-Ellis, Mid-continent Regional Educational Laboratory (Aurora, Colorado). U.S. Office of Education, $1,618,214; subcontract award, $389,076 (1997-2001)

Pacific Resources for Education and Learning Distance Education: Project Evaluation. Developed in partnership by the Pacific Educational Community, the Pacific Resources for Education and Learning (PREL), and Mid-continent Regional Educational Laboratory (McREL). Research team: John W. Kofel (PI), Executive Director, PREL; J. Timothy Waters, Executive Director; Joan Buttram, Robert Keller, and Sylvia D. Hall-Ellis, Mid-continent Regional Educational Laboratory (Aurora, Colorado). U.S. Office of Education, Star Schools Program, $10,000,000; subcontract award, $500,000 (1997-2002)

Identification of Bilingual Gifted and Talented Children: A Comprehensive School Grants for Bilingual Education. Developed in partnership by Hidalgo (Texas) ISD, Los Fresnos (Texas) CISD, Progreso (Texas) ISD, University of Texas – Pan American (Edinburg, Texas), and Education Service Center, Region One (Edinburg, Texas). Research team: Hilda Medrano, Dean, College of Education, University of Texas – Pan American; Linda Phemister (PI), Janie Navarro, and Sylvia D. Hall-Ellis, Education Service Center, Region One. U.S. Department of Education, Office of Bilingual Education and Minority Languages Affairs, $1,670,633 (1997-2002)

Academics 2000: First Things First -- The Texas Goals 2000. Developed for Jim Hogg (Hebbronville, Texas) County ISD, Mirando City (Texas) ISD, and San Isidro (Texas) ISD. Research team: Hilda Medrano, Dean, College of Education, University of Texas - Pan American (Edinburg, Texas); Angie Lehmann, Amy Mares, Ellen Gonzalez (PI), and Sylvia D. Hall-Ellis, Education Service Center, Region One (Edinburg, Texas). Texas Education Agency, $339,987 (1997-2000)

Southwestern Bell's Learning Communities Initiative. Developed for Tech Prep of the Rio Grande Valley, Inc. (Harlingen, Texas); the Center for Professional Teacher Development, University of Texas – Brownsville; Teach for America – Rio Grande Valley (McAllen, Texas); and Education Service Center, Region One (Edinburg, Texas). Research team: Patricia G. Bubb, Executive Director (PI), Tech Prep of the Rio Grande Valley; Martin Winchester, Executive Director, Teach for America – Rio Grande Valley; Aileen Johnson, Director, School of Education, University of Texas – Brownsville; and Sylvia D. Hall-Ellis. Southwestern Bell Foundation, $100,000 (1997-1998)

Texas School to Work: Regional Implementation. Developed for Tech Prep of the Rio Grande Valley, Inc. (Harlingen), South Texas Community College (McAllen), Texas State Technical College (Harlingen), Texas Southmost College (Brownsville), Empowerment Zone of the Rio Grande Valley (Mercedes), Project VIDA (Weslaco), Youth Fair Chance (McAllen), and Education Service Center, Region One (Edinburg). Research team: Patricia G. Bubb (PI), Tech Prep of the Rio Grande Valley; Stephen Vassberg, Texas State Technical College; Ellen Trevino, Youth Fair Chance; Wanda Garza, Project VIDA; Leonardo Olivares, University of Texas – Pan American; Michael Bell, South Texas Community College; and Sylvia D. Hall-Ellis. Texas Workforce Commission, $4,250,000 (1997-2002).

Comprehensive Bilingual Education Grant for Hidalgo ISD and Roma ISD. Developed for Hidalgo (Texas) ISD, Roma (Texas) ISD, College of Education, University of Texas – Pan American (Edinburg, Texas), and Education Service Center, Region One (Edinburg, Texas). Research team: Tomas Thomas (PI), Director, Office of Bilingual Education and Sylvia D. Hall-Ellis. U.S. Department of Education, Office of Bilingual Education and Minority Languages Affairs, $1,531,361 (1997-2002)

Lopez High School, Porter High School, Rivera High School, Central Middle School, and Perkins Middle School, Brownsville (Texas) Independent School District. Telecommunications Infrastructure Fund Board, $1,473,611 (1997-1998)

Donna High School, Todd Middle School, and Solis Middle School, Donna (Texas) Independent School District. Telecommunications Infrastructure Fund Board, $704,052 (1997-1998)

Memorial Middle School and Nellie Schunior Middle School, La Joya Independent School District (Texas). Telecommunications Infrastructure Fund Board, $293,641 (1997-1998)

Martin High School, Christen Middle School, Cigarroa Middle School, Lamar Middle School, Laredo (Texas) Independent School District. Telecommunications Infrastructure Fund Board, $1,200,000 (1997-1998).

Lasara Middle School, Lasara (Texas) Independent School District. Telecommunications Infrastructure Fund Board, $246,210 (1997-1998)

Los Fresnos High School and Resaca Middle School, Los Fresnos (Texas) Consolidated Independent School District. Telecommunications Infrastructure Fund Board, $500,000 (1997-1998)

Lyford Junior High School, Lyford (Texas) Independent School District. Telecommunications Infrastructure Fund Board, $354,997 (1997-1998)

Travis Middle School, McAllen (Texas) Independent School District. Telecommunications Infrastructure Fund Board, $269,139 (1997-1998)

Mission High School, Mission (Texas) Independent School District. Telecommunications Infrastructure Fund Board, $297,010 (1997-1998)

Progreso High School, Progreso (Texas) Independent School District. Telecommunications Infrastructure Fund Board, $300,000 (1997-1998)

San Perlita High School, San Perlita (Texas) Independent School District. Telecommunications Infrastructure Fund Board, $293,490 (1997-1998)

Myra Green Junior High School, Raymondville (Texas) Independent School District. Telecommunications Infrastructure Fund Board, $225,000 (1997-1998)

Rio Grande City High School, Ringgold Middle School, Gruella Middle School, Rio Grande City (Texas) Independent School District. Telecommunications Infrastructure Fund Board, $809,934 (1997-1998)

Rio Hondo Junior High School, Rio Hondo (Texas) Independent School District. Telecommunications Infrastructure Fund Board, $297,024 (1997-1998)

Roma High School, Roma (Texas) Independent School District. Telecommunications Infrastructure Fund Board, $333,178 (1997-1998)

San Benito High School, Miller Jordan Junior High School, San Benito (Texas) Consolidated Independent School District. Telecommunications Infrastructure Fund Board, $547,000 (1997-1998)

Santa Maria High School and Santa Maria Middle School, Santa Maria (Texas) Independent School District. Telecommunications Infrastructure Fund Board, $400,000 (1997-1998)

Salvador High School, United Independent School District (Laredo, Texas). Telecommunications Infrastructure Fund Board, $250,879 (1997-1998)

Weslaco High School, Cabaza Middle School, Cuellar Middle School, Weslaco (Texas) Independent School District. Telecommunications Infrastructure Fund Board, $874,242 (1997-1998)

Principals' Assessment and Training Center. Developed for Education Service Center, Region One (Edinburg, Texas). Research team: Roberto Zamora, Leonel Barrera, William H. Parry, and Sylvia D. Hall-Ellis. Texas Principals' Leadership Initiative, Texas Association of Secondary School Principals, Texas Association of Elementary School Principals, and the Sid Richardson Foundation. $461,439 (1996-1998)

The Texas Library Connection -- Integrating and Sharing Resources. Developed for Hidalgo County Library System (McAllen), Cameron County Library System (Brownsville), South Texas Community College (McAllen), the University of Texas - Pan American (Edinburg), University of Texas – Brownsville, and Education Service Center, Region One (Edinburg). Research team: William R. McGee, Coordinator, Hidalgo County Library System; Joe Garcia, Director, Cameron County Library System; Michael D. Bell, Library Director, South Texas Community College; Eleanor Folger Foster, University Library, University of Texas - Pan American; Jaime Vela (PI), Director of Instructional Technology and Media Services, Ron Pontius, Instructional Technology, and Fabiola Fuentes, Media Services, Education Service Center, Region One; and Sylvia D. Hall-Ellis. Office of Library Media Services, Technology Services, Texas Education Agency. $8,000 (1996-1997)

Developing Leadership Communities for Improving Algebra I for All Students. Developed for a partnership of the Region One Statewide Systemic Initiative Team. Research team: Noel Villarreal (PI), Eduardo Cancino, and Sylvia D. Hall-Ellis, Education Service Center, Region One (Edinburg). Texas Statewide Systemic Initiative for Reform in Mathematics, Science and Technology Education to The Charles A. Dana Center for Mathematics and Science Education, The University of Texas at Austin. $25,000 (1996-1997)

Academics 2000: First Things First -- The Texas Goals 2000. Developed for Edinburg (Texas) CISD. Research team: Hilda Medrano, Dean, College of Education, University of Texas - Pan American (Edinburg); Helen Jones, Director (PI), Gifted and Talented Education, Edinburg CISD; and Sylvia D. Hall-Ellis, Education Service Center, Region One (Edinburg). Texas Education Agency, $750,000 (1996-2001)

Texas Teachers Empowered for Achievement in Mathematics (TEXTEAM) Institute for Algebra I. Developed for Hidalgo ISD, Jim Hogg (Hebbronville) County ISD, La Joya ISD, La Villa ISD, Lyford ISD, Mission CISD, Pharr-San Juan-Alamo ISD, Rio Hondo ISD, San Isidro ISD, San Perlita ISD, Santa Maria ISD, Santa Rosa, Sharyland ISD, Valley View ISD, Webb (Laredo) CISD, Weslaco ISD, and Zapata County (Zapata) ISD. Research team: Noel Villarreal (PI), Chuck McInteer, Ellen M. Gonzalez, Education Service Center, Region One (Edinburg); and Sylvia D. Hall-Ellis. Charles A. Dana Center for Mathematics and Science Education, University of Texas - Austin, $15,975 (1996)

Community Learning Center for La Villa, Texas. Developed for Edcouch-Elsa Independent School District. Research team: Noe Gonzalez (PI), Assistant Superintendent, Edcouch-Elsa Independent School District, and Sylvia D. Hall-Ellis. Delta Region Subzone, Rio Grande Valley (Texas) Rural Empowerment Zone, $325,000 (1996-1997)

Monte Alto (Texas) Community Learning Center. Developed for Monte Alto Independent School District. Research team: Homero A. Diaz (PI), Superintendent, Monte Alto Independent School District, and Sylvia D. Hall-Ellis. Delta Region Subzone, Rio Grande Valley (Texas) Rural Empowerment Zone, $300,000 (1996-1997)

Community Learning Center for La Villa, Texas. Developed for La Villa Independent School District. Research team: Sam Gonzalez (PI), Assistant Superintendent, La Villa Independent School District; and Sylvia D. Hall-Ellis. Delta Region Subzone, Rio Grande Valley (Texas) Rural Empowerment Zone, $325,000 (1996-1997)

Building Project for Taylor Elementary. Developed for Mercedes (Texas) Independent School District. Research team: Mrs. Denise Rivera, Librarian, and Eduardo Infante, Principal, Taylor Elementary School; Ismael S. Cantu (PI), Federal Programs Director, Mercedes Independent School District; and Sylvia D. Hall-Ellis. Delta Region Subzone, Rio Grande Valley (Texas) Rural Empowerment Zone, $375,000 (1996-1997)

Border Education Network (BEN) - Distance Education through Cable Television. Developed for Edinburg (Texas) Consolidated Independent School District. Research team: Noe Torres (PI), Library Media Specialist, Magdalena
Rosas, Library Media and Technology Coordinator, Edinburg Consolidated Independent School District; and Sylvia D. Hall-Ellis, Education Service Center, Region One (Edinburg). Edinburg (Texas) Consolidated School District, $250,000 (1996-1997)

Multiservice One-Stop Open Enrollment Charter School. Developed for the Information Referral Resource Assistance, Inc. (McAllen, Texas). Research team: Pablo Perez and Aguie Pena (PI), Executive Director, Information Referral Resource Assistance, Inc.; Roberto Zamora and Sylvia D. Hall-Ellis, Education Service Center, Region One (Edinburg). Texas Education Agency, $3,066,000 (1996-2001)

Project OK: A Community Youth Opportunities Grant for Summer, 1996. Developed for McAllen (Texas) Independent School District, St. Joseph the Worker Catholic Church, and the Office of Adult Education, Education Service Center, Region One. Research team: Father Bart Flatt, St. Joseph the Worker Catholic Church; Noe Calvillo (PI), Office of Adult Education; Maria Louisa Garcia, McAllen Independent School District; and Sylvia D. Hall-Ellis, Education Service Center, Region One (Edinburg). Texas Protective and Regulatory Agency through the Office of the Mayor, City of McAllen, $350,000 (1996-2001).

Early Childhood: a Time of Discovery. Developed for a partnership of Lasara ISD, Rio Hondo ISD, San Perlita ISD, the School of Education, University of Texas - Brownsville, and Education Service Center, Region One (Edinburg). Research team: Hugo Rodriguez, Dean, School of Education, University of Texas - Pan American; Leonel Barrera and Jack Damron, Field Service Agents, Ellen M. Gonzalez (PI), Administrator for Student Instructional Services, Ruth Solis, Education Specialist in Special Education, and Sylvia D. Hall-Ellis, Education Service Center, Region One (Edinburg). Texas Education Agency, $722,090 (1996-2001)

Innovative Gifted and Talented Programs for Early Childhood and Elementary Education Students. Developed for a partnership of Edinburg (Texas) CISD, the School of Education, University of Texas - Pan American (Edinburg), and Education Service Center, Region One (Edinburg). Research team: Hilda Medrano, Dean, School of Education, University of Texas - Pan American; Helen de la Garza (PI), Director of Elementary Curriculum and Instruction, Edinburg CISD; and Sylvia D. Hall-Ellis. Texas Education Agency, $750,000 (1996-2001)

Reading Recovery in Early Elementary Grades. Developed for a partnership of La Villa (Texas) ISD the School of Education, University of Texas - Pan American (Edinburg), and Education Service Center, Region One (Edinburg). Research team: Hilda Medrano, Dean, School of Education, University of Texas - Pan American; Marcario Salinas (PI), Supervisor of Elementary Curriculum and Instruction, La Villa ISD; and Sylvia D. Hall-Ellis, Education Service Center, Region One. Texas Education Agency, $750,000 (1996-2001)

Connected Mathematics Project for Middle and Junior High Students. Developed for a partnership of Michigan State University, The Charles A. Dana Center for Mathematics and Science Education, The University of Texas at Austin and Region One Statewide Systemic Initiative Team. Research team: Jack Damron, Chuck McInteer, Noel Villarreal (PI), and Sylvia D. Hall-Ellis, Education Service Center, Region One (Edinburg). National Science Foundation through Michigan State University to the Charles A. Dana Center at the University of Texas - Austin, $539,610 (1996-1999)

Sharing Resources: Testing the Interlibrary Loan Potential of the Texas Library Connection -- Integrating Media Resources. Developed under the sponsorship of the Hidalgo County Library System (McAllen) and Education Service Center, Region One (Edinburg). Research team: William H. McGee, Hidalgo County System Coordinator; Fabiola Fuentes, Library Media; Ronald Pontius (PI), Instructional Technology, Education Service Center, Region One; and Sylvia D. Hall-Ellis. Library Media Services Program, Office of Technology Services, Texas Education Agency, $25,000 (1996-1997)

State and Federal Adult Education JOBS Program. Developed for Education Service Center, Region One (Edinburg). Research team: Noe Calvillo (PI), Director, Adult Education Program, and Sylvia D. Hall-Ellis. Adult Education Program, Texas Education Agency, $532,846 (1995-1996)

Creating Safe and Drug-Free Schools and Communities. Developed for a partnership of the Region One Consortium for Safe and Drug-Free Education Environments. Research team: Clara Contreras (PI), Health Specialist, and Sylvia D. Hall-Ellis, Education Service Center, Region One (Edinburg). Texas Education Agency, $150,000 (1995-1996)

Developing Leadership Communities for Improving Mathematics Performance for All Students on Title I Campuses. Developed for a partnership of the Region One Statewide Systemic Initiative Team. Research team: Jack Damron, Chuck McInteer, Noel Villarreal (PI), and Sylvia D. Hall-Ellis, Education Service Center, Region One (Edinburg). Texas Statewide Systemic Initiative for Reform in Mathematics, Science and Technology Education to The Charles A. Dana Center for Mathematics and Science Education, The University of Texas at Austin, $50,669 (1995-1996)

The Impact of Library Resource Centers on Academic Achievement in Selected Public Schools in South Texas. Sylvia D. Hall-Ellis (PI). Developed under the sponsorship of the Department of Library Science, College of Education and Applied Science, Sam Houston State University (Huntsville). Texas Association of School Librarians, Children's Services Round Table, and Young Adults Round Table (Austin, Texas), $2,500 (1995)

School Library Media Specialists Fellowship Program. Sylvia D. Hall-Ellis (PI). Developed under the sponsorship of the Department of Library Science, College of Education and Applied Science, Sam Houston State University (Huntsville, Texas). U.S. Department of Education, HEA Title II-B, Library Education and Human Resource Development Program, $44,000 (1995-1996)

Planning for Educational Technology. Research team: Ruth Ann Riggins (PI), Director of Library Media and Technology Services, Donna (Texas) Independent School District; Noe Torres, Education Service Center, Region One; Patricia G. Bubb, Tech Prep of the Rio Grande Calley, Inc; Michael D. Bell, South Texas Community College; and Sylvia D. Hall-Ellis, Sam Houston State University. Developed under the sponsorship of Donna (Texas) Independent School District, Education Service Center, Region One (Edinburg), Tech Prep of the Rio Grande Valley, Inc. (Harlingen), South Texas Community College (McAllen), and the Department of Library Science, Sam Houston State University (Huntsville). Funded through Infusion of Educational Technology Planning Grant Program (H.B. 18: Models). Texas Education Agency, $18,000 (1993-1994)

The Impact of Library Resource Centers on Academic Achievement in Selected Public Schools in South Texas. Sylvia D. Hall-Ellis (PI) and Mary Ann Berry. Developed under the sponsorship of the Department of Library Science, College of Education and Applied Science, Sam Houston State University (Huntsville). Sam Houston State University Research Enhancement Fund, $7,500 (1993-1994)

Electronic Mail Resource Sharing System: Management and Operation of the Iowa Computer-Assisted Network. State Library of Iowa, $294,000 (1986-1993)

The Iowa Locator: A CD-ROM Resource Sharing Tool. State Library of Iowa, $567,000 (1986-1992)

Statewide Database Development: An OCLC Tape Analysis To Determine Feasibility. State Library of South Dakota, $15,000 (1987)

The Iowa Locator: A Feasibility Study. State Library of Iowa, $50,000 (1986)

Electronic Mail Resource Sharing System: A Feasibility Study for Libraries in the State of Iowa. State Library of Iowa, $5,000 (1985)

Access Pennsylvania: A Feasibility Study. State Library of Pennsylvania, $50,000 (1984)

Automating Library Administrative and Management Tasks: Procurement and Distribution of Microcomputer Systems for District Library Centers in the Commonwealth of Pennsylvania. State Library of Pennsylvania, $495,000 (1982)

Sharing Serial Titles Resources: Procurement and Distribution of Microfiche Readers for 550 Libraries in the Commonwealth of Pennsylvania. State Library of Pennsylvania, $500,000 (1982)

Electronic Mail System: A Pilot Project for Libraries throughout the Commonwealth of Pennsylvania. State Library of Pennsylvania, $125,000 (1982)

Literacy Program for Adults in Rural Upstate New York State: Program Outreach and Evaluation - Phase 3. Appalachian Regional Commission, $50,000 (1981)

Database Building: A Cooperative Project of the Finger Lakes Library System (Ithaca), Four County Library System (Binghamton), and the Southern Tier Library System (Corning). New York State Library, $450,000 (1980-1985)

Faces of the Southern Tier: A Professional Photographer-in-Residence. New York State National Endowment for the Humanities, $25,000 (1980)

Literacy Program for Adults in Rural Upstate New York State: Program Implementation - Phase 2. Appalachian Regional Commission, $50,000 (1980)

Small Business Resources Center: A Pilot Project for Rural Public Libraries. New York State Library, $50,000 (1980)

Media Programming: A Professional Development Program for Public Librarians in Upstate New York: A Program in Allegheny, Chemung, Schuyler, Steuben, and Yates Counties. New York State Library, $35,000 (1979)

Information and Library Resources for Inmates and Prisoners in Selected Upstate New York Facilities: A Cooperative Program in Allegheny, Chemung, Schuyler, Steuben, and Yates Counties. New York State Library, $25,000 (1979)

Library Resources for Homebound Adults in Upstate New York: An Outreach Program in Allegheny, Chemung, Schuyler, Steuben, and Yates Counties. New York State Library, $40,000 (1979)

Literacy Program for Adults in Rural Upstate New York State: Program Initiation and Establishment - Phase 1. Funded by the Appalachian Regional Commission. Awarded to the Corning (New York) Public Library, $50,000 (1979)

Information Reference Services to Homebound Adults. New York State Library, $31,000 (1978)

Books-By-Mail Services to Homebound Adults. New York State Library, $31,000 (1978)

System Headquarters Services and Programs for Public Libraries in District 10. Funded through Library Services and Construction Act Title I. Texas State Library and Historical Commission, $880,000 (1976)

County Library Development Grant for Atascosita County. Funded through Library Services and Construction Act Title I. Texas State Library and Historical Commission, $15,000 (1976)

Spanish Language Materials Collection Development Program. Texas State Library and Historical Commission, $40,000 (1975)

Establishment of System Headquarters for Alamo Regional Library System (District 10) Headquartered at the San Antonio (Texas) Public Library. Texas State Library and Historical Commission, $800,000 (1975)

SELECTED CONSULTANTSHIPS

Project Strategic Planning & Funding Proposal Development

Walden University, 2015.
Pikes Peak Library District, 2014.
Douglas County Public Libraries, 2011-2012.
Denver School for Science and Technology, 2008-2011.
Johnson & Wales University, Denver Campus, 2007-2009.
Challenges, Choices, and Images K-12 Charter School, Denver Public Schools, 2007.
Denver Medical Library, Inc., 2006-2010.
Bemis Public Library (Littleton), Ergonomic Design and Facilities Enhancement Consultant, 2003.
Curtis Park Community Center (Denver), Community Technology Center Evaluation and Proposal Development Consultant, 2003.
Colorado Community Based Research Network (Denver), Funding Research Associate, 2002.
Our Lady of the Rosary Academy (Edgewater), Learning Resource Center Development Project Consultant, 2001-2003
University of Southern Colorado (Pueblo). Technology Integration and Curriculum Enhancement into Higher Education Learning Environment. Proposal Development Consultant, 2000.
Jefferson County Library System (Lakewood), 1999-2000.
Southeastern BOCES (Lamar, CO). Distance Learning Curriculum Content Development Project. Proposal Development Consultant, 1998-2004.
Cheyenne Mountain School District 12 (Colorado Springs, CO). Technology Integration into Elementary Writing Curriculum Project. Proposal Development Consultant, 1998.
Telecommunications Infrastructure Fund Board Round #2 Application, 1997. Technical assistance to the following: La Villa (Texas) Independent School District; Mirando City (Texas) Independent School District; Monte Alto (Texas) Independent School District; San Isidro (Texas) Independent School District.
Telecommunications Infrastructure Fund Board Round #1, 1996. Technical assistance to the following: Brownsville (Texas) Independent School District; Donna (Texas) Independent School District; Edinburg (Texas) Consolidated Independent School District; Harlingen (Texas) Consolidated Independent School District; Jim Hogg County Independent School District (Hebbronville, Texas); La Feria (Texas) Independent School District; La Joya (Texas) Independent School District; La Villa (Texas) Independent School District; Los Fresnos (Texas) Consolidated Independent School District; Progreso (Texas) Independent School District; Raymondville (Texas) Independent School District; Rio Hondo (Texas) Independent School District; San Benito (Texas) Independent School District; Sharyland Independent School District (Mission, Texas); Weslaco (Texas) Independent School District; Zapata (Texas) County Independent School District.
South Texas Community College (McAllen). Strategy Development to Meet the Technology Instructional Needs for Vocational, School-To-Work and Academic Programs, 1994-2000. Development Consultant.
Donna (Texas) Independent School District. Planning for the Infusion of Technology in Middle Schools Serving High At-Risk Students, 1994-1995. Research Associate.
Pettus (Texas) Independent School District. Planning for District-wide Automation in School Library Media Centers: Preparation of Data, and CD-ROM Hardware/Software Configuration Evaluation, 1994. Principal Investigator.
Fort Bend Independent School District (Sugar Land, TX). Planning for District-wide Automation in School Library Media Centers, Preparation of Data, and CD-ROM Hardware/Software Configuration Evaluation, 1994-1995. Principal Investigator.
Northern Waters Library Services (Ashland, WI). Professional Consulting Services to Make Recommendations on the Development of System-Wide Efforts of the Northern Waters Library Service, 1988-1989. Research Associate.
State Library of Iowa (Des Moines). The Iowa Locator Compact Disc to Support Multi-Type Libraries Resource Sharing including Database Design, Building, Production, and Distribution, 1986-1991. Project Director.
State Library of Iowa (Des Moines). Iowa Computer-Assisted Network Development, Enhancement, and Operation, 1985-1992. Technical Director.
State Library of South Dakota (Pierre). Statistical Sampling and Analysis of Multi-Institutional OCLC Archive Tape for Statewide Online Database Building, 1985-1986. Research Associate.
District of Columbia Public Library (Washington, DC). Planning Document for the Retrospective Conversion of Bibliographic Records and Automation Issues in the 1990's, 1984-1985. Research Associate.

State Library of Pennsylvania (Harrisburg). Database Development for High School Libraries, 1984-1985. Research Associate.
MINITEX (Minneapolis, MN). Workshops for Retrospective Conversion, Bar Coding, Library Statistics, and OCLC Serials Format, 1985. Presenter and Research Associate.
ABC Film Consortium (Altoona, Bellefonte, Johnstown, PA). Database Building, System Design, and Implementation of Online Film Booking System, 1983-1985. Database Manager.

Library Automation -- System Design & Implementation

Douglas County Library District (Castle Rock, CO). Library Automation Technical and System Performance Specifications, 2001.
Pharr-San Juan-Alamo Independent School District (Pharr, TX). Library Automation Technical and System Performance Specifications, 1997. Project Development Consultant.
Harlingen (Texas) Independent School District. Planning for District-wide Automation in Junior High School Library Media Centers: Preparation of Data, and CD-ROM Hardware/Software Configuration Evaluation, 1996. Principal Investigator.
Sharyland (Texas) Independent School District. Design and Construction of New Elementary School Library and Technology Resources Center, 1995-1996. Principal Investigator.
South Texas Independent School District (Mercedes, TX). Design and Construction of a New High School Library and Technology Resources Center, 1995-1996. Principal Investigator.
Citizens' Library (Washington, PA). Online Community Resources Files: Design and Implementation, 1984. Research Associate.
Altoona (Pennsylvania) Hospital. Integrated Online System Upgrade Study, 1984. Research Associate.
State Library of South Dakota (Pierre). Automation Plan and State Database Development, 1982-1983. Principal Investigator.
State Library of Pennsylvania (Harrisburg). COM Production and Preparation of the Technical Specifications Document, Procurement, and Distribution of Microcomputers in the Commonwealth of Pennsylvania, 1983-1984. Research Associate.
Altoona (Pennsylvania) Area Public Library. Integrated System (Circulation/Online Catalog) Study, 1982-1983. Principal Investigator.
COPSCAULD (Council of Pennsylvania State College and University Library Directors, Edinboro, PA). Design of Online Media Catalog, 1982. Principal Investigator.
Erie (Pennsylvania) County Library System. Operations Research and Design for Automated Circulation, Hardware Upgrade and Re-Retrospective Conversion, 1982. Research Associate.
Michigan Library Consortium (Lansing, MI). Tape Management System Design and Implementation, 1982-1984. Research Associate.
State Library of Pennsylvania (Harrisburg). Preparation of the Technical Specifications Document, Procurement and Distribution of Microfiche Readers in the Commonwealth of Pennsylvania, 1982. Research Associate.
Community College of Allegheny County, Allegheny Campus (Pittsburgh, PA). Integrated Systems Study, 1981. Principal Investigator.
Community College of Allegheny County, South Campus (West Mifflin, PA). Retrospective Conversion Training Program for Handicapped Students, 1981. Technical Director.
Southern Tier Library System (Corning, NY). OCLC Acquisitions Subsystem Evaluation, 1981. Principal Investigator.
South Central Reference and Research Council (Ithaca, NY). South Central Regional Delivery System, 1980. Principal Investigator.
Southern Tier Library System (Corning, NY). Newspapers on Microfilm in the Chemung-Southern Tier Library System, 1979-1981. Principal Investigator.

Cataloging & Bibliographic Database Building

Challenges, Choices, and Images K-12 Charter School, Denver Public Schools, 2007.
Denver Medical Library, Inc., 2006-2010.
Ricks Gifted and Talented School Library, 2005-
American Humane Society (Englewood), 2004-2006.
Fisher Early Learning Center Library, 2004-

Colorado Community Based Research Network (Denver), 2004-
Boulder Valley School District (Boulder), 2002-2003.
Douglas Public Library District (Castle Rock), 2001-2002.

Bibliographic Center for Research, Inc. (Denver). Original Cataloging, 2001-2003 & 1992-1993. Professional Cataloger. Libraries include Arapahoe Library District (Centennial); Clarke College (Clarke, IA); Kaiser Permanente Center for Health Research (Portland, KS); Douglas County Library System (Carson City, NV); Grinnell College (Grinnell, IA); Kansas State University (Manhattan, KS); Kansas State Library (Topeka, KS); McPherson College (McPherson, KS); Newman University (Wichita, KS); Montana Technical University (Helena, MT); Montana State Library (Helena, MT); University of Texas Southwest Medical Center Library (Dallas, TX); Community College of Southern Nevada (Las Vegas, NV); Pikes Peak Library District (Colorado Springs); Mesa Community College (Grand Junction); Coe College (Cedar Rapids, IA); Briar Cliff College (Sioux City, IA); Tri-Care Health Systems (Aurora); The Penrose-St. Francis Healthcare System (Colorado Springs); Westminster Public Library (Westminster); Lutheran Medical Center Medical Library (Wheat Ridge); American Heritage Center, University of Wyoming (Laramie, WY); National Wildlife Research Center Library (Lakewood); University of Colorado Health Sciences Center, Denison Memorial Library (Denver); Water Resources Library, Denver District Office, Bureau of Land Management (Lakewood); Mesa State Community College Learning Resources Center (Pueblo); Front Range Community College Learning Resources Center (Westminster).

Colorado Historical Society Library (Denver). Original Cataloging of Serials for Multi-Institutional Union Listing Project, 1993. Technical Services Associate. Institutional partners: Denver Art Museum, Denver Museum of Natural History Library, and Denver Botanical Gardens Library.

Arapahoe Library District (Centennial). Original Cataloging of Major Media, 1991.

Original Cataloging Projects: Davis and Elkins College (Elkins, WV), 1989-1990; Waldorf College (Forest City, IA), 1989-1990; Kennametal Corporation (Latrobe, PA), 1984-1985; Pennsylvania Public Libraries Film Center (Harrisburg), 1982-1985.

Retrospective Conversion Projects: North Central Regional Library Service (Mason City, IA), 1987-1988; Southeastern Library Services (Davenport, IA), 1986-1987; Virginia Theological Seminary (Alexandria), 1984-1985; California University of Pennsylvania (California, PA), 1984-1985; Kennametal Corporation (Latrobe, PA), 1984-1985; West Virginia University (Morgantown), 1983-1985; Altoona Area Public Library (Altoona, PA), 1983-1984; George Washington University (Washington, DC), 1983-1984; Indiana University of Pennsylvania (Indiana, PA), 1983-1985; Health Education Center (Pittsburgh), 1983-1984; Central Pennsylvania District Library Center (Bellefonte, PA), 1982-1985; Duquesne University Law School Library (Pittsburgh), 1982-1983; Allegheny County Law Library (Pittsburgh), 1982-1984; Calgon Technical Information Center (Pittsburgh), 1982; Dow Corning Corporation, Technical Information Center (Midland, MI), 1982-1983; Tri-System Public Library Retrospective Conversion Project (Binghamton, Corning, and Ithaca, NY), 1978-1981, Technical Project Director.

Updated June 2023

Attachment A

OCTOBER 1991
Volume 12 Number 4
ISSN 0895-4798

S
SA101
JMA

KURT F. WENDT LIBRARY
COLLEGE OF ENGINEERING
SEP 26 1991
UW-MADISON, WI 53706

siam

SIAM
JOURNAL ON

Matrix Analysis and Applications

A PUBLICATION OF THE SOCIETY FOR INDUSTRIAL AND APPLIED MATHEMATICS

SIAM JOURNAL ON

Matrix Analysis and Applications

89039142476
b89039142476a

OCTOBER 1991 Volume 12, Number 4

CONTENTS

611 Iterative Descent Algorithms for a Row Sufficient Linear Complementarity Problem
Jong-Shi Pang

625 A Black Box Generalized Conjugate Gradient Solver with Inner Iterations and Variable-Step Preconditioning
O. Axelsson and P. S. Vassilevski

645 A Class of Arbitrarily Ill Conditioned Floating-Point Matrices
Siegfried M. Rump

654 An Algorithm for $Ax = \lambda Bx$ with Symmetric and Positive-Definite A and B
Wang Shougen and Zhao Shuqin

661 Diagonalizing the Adaptive SOR Iteration Method
Jerome Dancis

679 Order Reductions of the Marginals and Identification of Multiple ARMA Models
Antonie Stam and Steven C. Hillmer

690 Globally and Rapidly Convergent Algorithms for Symmetric Eigenproblems
Giles Auchmuty

707 The Effective Computation of Equilibrium Point for N-Person Games Cyclic to the Next Person
Ezio Marchi

713 Reducing the Computations of the Singular Value Decomposition Array Given by Brent and Luk
B. Yang and J. F. Böhme

726 On Monotone Linear Operators and the Spectral Radius of Their Representing Matrices
Harry H. Tigelaar

730 On the Identification of Local Minimizers in Inertia-Controlling Methods for Quadratic Programming
A. L. Forsgren, P. E. Gill, and W. Murray

747 On the Smith Normal Form of Structured Polynomial Matrices
Kazuo Murota

766 Minimax Polynomial Preconditioning for Hermitian Linear Systems
Steven F. Ashby

790 Some Inequalities on the Decomposable Numerical Radii of Matrices
Chi-Kwong Li

805 Author Index

CODEN: SJMAEL

SIAM JOURNAL ON

Matrix Analysis and Applications

OCTOBER 1991 Volume 12, Number 4

Managing Editor G. H. Golub

Associate Managing Editor R. J. Plemmons

Editorial Board

T. Ando
A. Berman
R. Brualdi
J. Bunch
A. Bunse-Gerstner
P. J. Courtois
G. Cybenko
B. N. Datta
Y. Genin
J. R. Gilbert
L. J. Gleser
M. Goldberg
W. B. Gragg
A. Greenbaum
M. Gutknecht
S. Hammarling
N. J. Higham
R. A. Horn
B. Kågström
J. Kautsky
P. Lancaster
J. W. H. Liu
F. T. Luk
T. A. Manteuffel
J. S. Maybee
R. L. Merris
C. Meyer
N. K. Nichols
I. Olkin
J. S. Pang
U. G. Rothblum
K. Sigmon
G. Strang
P. van Dooren
C. Van Loan
R. S. Varga
A. Watson
H. Weinberger

Publisher: Vickie H. Kearn. **Production Manager:** J. Corey Gray. **Managing Editor:** Tricia Manning. **Senior Production Editor:** Crystal G. Norris. **Copy Editor:** Beth Gallagher. **Editorial Assistant:** David Livewell. **Production Coordinator:** Nancy H. Abbott. **Reprints Coordinator:** Jill M. Davis.

SIAM JOURNAL ON MATRIX ANALYSIS AND APPLICATIONS (ISSN 0895-4798) is published quarterly in January, April, July, and October by the Society for Industrial and Applied Mathematics, 3600 University City Science Center, Philadelphia, PA 19104-2688. Second-class postage paid at Philadelphia, Pennsylvania and additional mailing offices. POSTMASTER: Send address change to *SIAM Journal on Matrix Analysis and Applications*, 3600 University City Science Center, Philadelphia, PA 19104-2688.

Subscriptions: Annual subscription list price: $130.00 (domestic), $155.00 (overseas); annual individual member subscription price: $40.00 (domestic), $43.00 (overseas). Subscriptions are available on a calendar-year basis only. Send orders to Customer Service, SIAM, 3600 University City Science Center, Philadelphia, PA 19104-2688. In Japan send orders to USACO Corporation, 13-12, Shimbashi, 1-chome, Minato-ku, Tokyo 105, tel. 03(502)-6471. All back volumes are available; prices will be provided on request. **Manuscript Submissions:** See Instructions to Authors on page iv of this journal. **Advertising:** Accepted for all publications. Inquiries should be directed to the Marketing Manager, SIAM Publications, 3600 University City Science Center, Philadelphia, PA 19104-2688.

Authorization to photocopy items for internal and personal use, or the internal use of specific clients, is granted by the Society for Industrial and Applied Mathematics for libraries and other users registered with the Copyright Clearance Center (CCC) Transactional Reporting Service provided that the base fee of $1.50 per copy plus $0.10 per page is paid directly to CCC, 21 Congress Street, Salem, Massachusetts 01970.

TAPSCO, Inc., Akron, Pennsylvania, compositor; Lancaster Press, Lancaster, Pennsylvania, printer.

The *SIAM Journal on Matrix Analysis and Applications* is a continuation of the *SIAM Journal on Algebraic and Discrete Methods* (ISSN 0196-5212).

Copyright 1991 by the Society for Industrial and Applied Mathematics, Philadelphia, Pennsylvania.

siam is a registered trademark.

This material may be protected by Copyright law (Title 17 U.S. Code)

SIAM J. MATRIX ANAL. APPL.
Vol. 12, No. 4, pp. 713–725, October 1991
© 1991 Society for Industrial and Applied Mathematics
009

REDUCING THE COMPUTATIONS OF THE SINGULAR VALUE DECOMPOSITION ARRAY GIVEN BY BRENT AND LUK*

B. YANG† AND J. F. BÖHME†

Abstract. A new, efficient, two-plane rotation (TPR) method for computing two-sided rotations involved in singular value decomposition (SVD) is presented. It is shown that a two-sided rotation can be evaluated by only two plane rotations and a few additions. This leads to significantly reduced computations. Moreover, if coordinate rotation digital computer (CORDIC) processors are used for realizing the processing elements (PEs) of the SVD array given by Brent and Luk, the computational overhead of the diagonal PEs due to angle calculations can be avoided. The resulting SVD array has a homogeneous structure with identical diagonal and off-diagonal PEs. Similar results can also be obtained if the TPR method is applied to Luk's triangular SVD array and to Stewart's Schur decomposition array.

Key words. singular value decomposition, systolic arrays, CORDIC, two-sided rotations, VLSI

AMS(MOS) subject classification. 15A18

1. Introduction. One important problem in linear algebra and digital signal processing is the singular value decomposition (SVD). Typical applications arise in beamforming and direction finding, spectrum analysis, digital image processing, etc. [1]. Recently, there has been a massive interest in parallel architectures for computing SVD because of the high computational complexity of SVD, the growing importance of real-time signal processing, and the rapid advances in very large scale integration (VLSI) that make low-cost, high-density and fast processing memory devices available.

There are different numerically stable methods for computing complete singular value and singular vector systems of dense matrices, for example, the Jacobi SVD method, the QR method, and the one-sided Hestenes method. For parallel implementations, the Jacobi SVD method is far superior in terms of simplicity, regularity, and local communications. Brent, Luk, and Van Loan have shown how the Jacobi SVD method with parallel ordering can be implemented by a two-dimensional systolic array [2], [3]. Various coordinate rotation digital computer (CORDIC) realizations of the SVD array have been reported by Cavallaro and Luk [4] and Delosme [5], [6].

The Jacobi SVD method is based on, as common for all two-sided approaches, applying a sequence of two-sided rotations to 2×2 submatrices of the original matrix. The computational complexity is thus determined by how to compute the two-sided rotations. In most previous works, a two-sided rotation is evaluated in a straightforward manner by four plane rotations, where two of them are applied from left to the two column vectors of the 2×2 submatrix and the other ones are applied from right to the row vectors, respectively. In the diagonal processing elements (PEs), additional operations for calculating rotation angles are required. This leads to an inhomogeneous array architecture containing two different types of PEs.

In this paper, we develop a two-plane rotation (TPR) method for computing two-sided rotations. We show that the above computational complexity can be reduced significantly because each two-sided rotation can be evaluated by only two plane rotations and a few additions. Moreover, the SVD array given by Brent and Luk becomes homogeneous with identical diagonal and off-diagonal PEs when CORDIC processors are

* Received by the editors September 28, 1989; accepted for publication (in revised form) August 2, 1990.
† Department of Electrical Engineering, Ruhr-Universität Bochum, 4630 Bochum, Germany.

MediaTek Exhibit 1021, Page 79 of 105

used. In a recent work [6], Delosme has also indicated this possibility in connection with "rough rotations" independently. He has taken, however, a different approach that is based on encoding the rotation angles. He has still required four plane rotations on the off-diagonal PEs while diagonal and off-diagonal operations can be overlapped.

Our paper is organized as follows. In § 2, we briefly reexamine Jacobi's SVD method and Brent and Luk's SVD array. Then, we develop the TPR method in § 3. The CORDIC algorithm is described in § 4, where in particular CORDIC scaling correction techniques are discussed and examples of scaling-corrected CORDIC sequences are given. In § 5, a unified CORDIC SVD module for all PEs of the SVD array is presented. This module is compared to those proposed by Cavallaro, Luk, and Delosme in § 6. Finally, we stress the applicability of the TPR method to several other problems.

2. Jacobi SVD method. In this paper, we consider real, square, and nonsymmetric matrices. Let $M \in \mathbb{R}^{N\times N}$ be a matrix of dimension N. The SVD is given by

$$M = U\Sigma V^T, \tag{1}$$

where $U \in \mathbb{R}^{N\times N}$ and $V \in \mathbb{R}^{N\times N}$ are orthogonal matrices containing the left and right singular vectors, and $\Sigma \in \mathbb{R}^{N\times N}$ is a diagonal matrix of singular values, respectively. The superscript T denotes matrix transpose. Based on an extension of the Jacobi eigenvalue algorithm [7], Kogbetliantz [8] and Forsythe and Henrici [9] proposed to diagonalize M by a sequence of two-sided rotations,

$$M_0 = M, \qquad M_{k+1} = U_k^T M_k V_k \qquad (k = 0, 1, 2, \cdots). \tag{2}$$

U_k and V_k describe two rotations in the (i, j)-plane ($1 \leqq i < j \leqq N$), where the rotation angles are chosen to annihilate the elements of M_k at the positions (i, j) and (j, i). Usually, several sweeps are necessary to complete the SVD, where a sweep is a sequence of $N(N-1)/2$ two-sided rotations according to a special ordering of the $N(N-1)/2$ different index pairs (i, j).

For sequential computing on a uniprocessor system, possibly the most frequently used orderings are the cyclic orderings, namely, the cyclic row ordering

$$(i,j) = (1,2), (1,3), \cdots, (1,N), (2,3), \cdots, (2,N), \cdots, (N-1,N) \tag{3}$$

or the equivalent cyclic column ordering. Sameh [10] and Schwiegelshohn and Thiele [11] have shown how to implement the cyclic row ordering on a ring-connected or a mesh-connected processor array. Recently, a variety of parallel orderings have been developed. Luk and Park [12] have shown that these parallel orderings are essentially equivalent to the cyclic orderings and thus share the same convergence properties.

Brent and Luk have suggested a particular parallel ordering and developed a square systolic array consisting of $\lceil N/2 \rceil \times \lceil N/2 \rceil$ PEs for implementing the Jacobi SVD method (Fig. 1). To do this, the matrix M is partitioned into 2×2 submatrices. Each PE contains one submatrix and performs a two-sided rotation

$$B = R(\theta_1)^T A R(\theta_2), \tag{4}$$

where

$$A = \begin{pmatrix} a_{11} & a_{12} \\ a_{21} & a_{22} \end{pmatrix} \quad \text{and} \quad B = \begin{pmatrix} b_{11} & b_{12} \\ b_{21} & b_{22} \end{pmatrix} \tag{5}$$

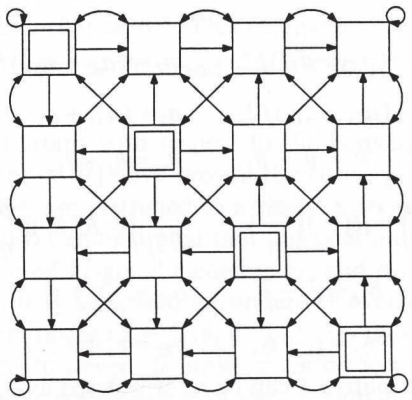

FIG. 1. *The* SVD *array given by Brent and Luk.*

denote the submatrix before and after the two-sided rotation, respectively, and

$$R(\theta)=\begin{pmatrix}\cos\theta & \sin\theta\\ -\sin\theta & \cos\theta\end{pmatrix} \tag{6}$$

describes a plane rotation through the angle θ. At first, the diagonal PEs (symbolized by a double square in Fig. 1) generate the rotation angles to diagonalize the 2×2 submatrices ($b_{12}=b_{21}=0$) stored in them. This means that θ_1 and θ_2 are first calculated from the elements of A and then relation (4) is used to compute b_{11} and b_{22}. We call this the generation mode. Then, the rotation angles are sent to all off-diagonal PEs in the following way: the angles associated to the left-side rotations propagate along the rows while the angles associated to the right-side rotations propagate along the columns. Once these angles are received, the off-diagonal PEs perform the two-sided rotations (4) on their stored data. We call this the rotation mode. Clearly, if we compute the rotation mode straightforwardly, we require four plane rotations. For the generation mode, additional operations for calculating θ_1 and θ_2 are required.

3. TPR method for computing two-sided rotations. In order to develop the TPR method for computing two-sided rotations more efficiently, we first discuss the commutative properties of two special types, the rotation-type and the reflection-type, of 2×2 matrices. We define

$$\mathcal{M}^{\text{rot}}=\left\{\begin{pmatrix}x & y\\ -y & x\end{pmatrix}\middle| x,y\in\mathbb{R}\right\} \quad\text{and}\quad \mathcal{M}^{\text{ref}}=\left\{\begin{pmatrix}x & y\\ y & -x\end{pmatrix}\middle| x,y\in\mathbb{R}\right\}. \tag{7}$$

The former is called rotation-type because it has the same matrix structure as a 2×2 plane rotation matrix. Similarly, the latter is called reflection-type because it has the same matrix structure as a 2×2 Givens reflection matrix [13]. Note that x and y must not be normalized to $x^2+y^2=1$. Using the above definitions, the following results can be shown by some elementary manipulations.

LEMMA 1. *If* $A_1\in\mathcal{M}^{\text{rot}}$ *and* $A_2\in\mathcal{M}^{\text{rot}}$, *then* $A_1A_2=A_2A_1\in\mathcal{M}^{\text{rot}}$.

LEMMA 2. *If* $A_1\in\mathcal{M}^{\text{ref}}$ *and* $A_2\in\mathcal{M}^{\text{rot}}$, *then* $A_1A_2=A_2^TA_1\in\mathcal{M}^{\text{ref}}$.

In particular, if we consider two plane rotations, we know the following.

LEMMA 3. *If* $R(\theta_1)$ *and* $R(\theta_2)$ *are plane rotations described by* (6), *then* $R(\theta_1)R(\theta_2)=R(\theta_1+\theta_2)$ *and* $R(\theta_1)^TR(\theta_2)=R(\theta_2-\theta_1)$.

Now, we give a theorem describing the rotation mode of the TPR method.

THEOREM. *If the* 2×2 *matrix* A *and the two rotation angles* θ_1 *and* θ_2 *are given, then the two-sided rotation* (4) *can be computed by two plane rotations, ten additions,*

and four scalings by $\frac{1}{2}$:

$$p_1=(a_{22}+a_{11})/2, \qquad p_2=(a_{22}-a_{11})/2,$$
$$q_1=(a_{21}-a_{12})/2, \qquad q_2=(a_{21}+a_{12})/2, \tag{8}$$

$$\theta_-=\theta_2-\theta_1, \qquad \theta_+=\theta_2+\theta_1, \tag{9}$$

$$\begin{pmatrix} r_1 \\ t_1 \end{pmatrix}=R(\theta_-)\begin{pmatrix} p_1 \\ q_1 \end{pmatrix}, \qquad \begin{pmatrix} r_2 \\ t_2 \end{pmatrix}=R(\theta_+)\begin{pmatrix} p_2 \\ q_2 \end{pmatrix}, \tag{10}$$

$$b_{11}=r_1-r_2, \qquad b_{12}=-t_1+t_2,$$
$$b_{21}=t_1+t_2, \qquad b_{22}=r_1+r_2. \tag{11}$$

Proof. Using (8), the matrix A can be reformulated as

$$A=A_1+A_2=\begin{pmatrix} p_1 & -q_1 \\ q_1 & p_1 \end{pmatrix}+\begin{pmatrix} -p_2 & q_2 \\ q_2 & p_2 \end{pmatrix}.$$

Clearly, $R(\theta_1)$, $R(\theta_2)$ in (4) and A_1 are elements of $\mathcal{M}^{\text{rot}}$ while A_2 belongs to $\mathcal{M}^{\text{ref}}$. This leads to the following reformulation of the matrix B by using Lemmas 1–3:

$$\begin{aligned} B &= R(\theta_1)^T A R(\theta_2) \\ &= R(\theta_1)^T A_1 R(\theta_2)+R(\theta_1)^T A_2 R(\theta_2) \\ &= R(\theta_1)^T R(\theta_2) A_1+R(\theta_1)^T R(\theta_2)^T A_2 \\ &= R(\theta_2-\theta_1)A_1+R(\theta_2+\theta_1)^T A_2 \\ &= R(\theta_-)\begin{pmatrix} p_1 & -q_1 \\ q_1 & p_1 \end{pmatrix}+R(\theta_+)^T\begin{pmatrix} -p_2 & q_2 \\ q_2 & p_2 \end{pmatrix} \\ &= \begin{pmatrix} r_1 & -t_1 \\ t_1 & r_1 \end{pmatrix}+\begin{pmatrix} -r_2 & t_2 \\ t_2 & r_2 \end{pmatrix}. \end{aligned}$$

This completes the proof.

The generation mode of the TPR method follows directly from the above theorem.

COROLLARY. *If the* 2×2 *matrix* A *is given, we can diagonalize* A *and calculate the corresponding rotation angles* θ_1 *and* θ_2 *by two Cartesian-to-polar coordinates conversions, eight additions, and four scalings by* $\frac{1}{2}$:

$$p_1=(a_{22}+a_{11})/2, \qquad p_2=(a_{22}-a_{11})/2,$$
$$q_1=(a_{21}-a_{12})/2, \qquad q_2=(a_{21}+a_{12})/2, \tag{12}$$

$$r_1=\operatorname{sign}(p_1)\sqrt{p_1^2+q_1^2}, \qquad r_2=\operatorname{sign}(p_2)\sqrt{p_2^2+q_2^2},$$
$$\theta_-=\arctan(q_1/p_1), \qquad \theta_+=\arctan(q_2/p_2), \tag{13}$$

$$\theta_1=(\theta_+-\theta_-)/2, \qquad \theta_2=(\theta_++\theta_-)/2, \tag{14}$$

$$b_{11}=r_1-r_2, \qquad b_{22}=r_1+r_2. \tag{15}$$

Proof. Regarding (11), $b_{12}=b_{21}=0$ is equivalent to $t_1=t_2=0$. Equation (13) follows then from (10). This completes the proof.

In equation (13), we choose the rotation through the smaller angle. All vectors lying in the first or the fourth quadrant are rotated onto the positive x-axis, and all vectors lying in the second and the third quadrant are rotated onto the negative x-axis. For vectors on the y-axis, the rotation direction is arbitrary. Thus, the generated rotation

angles θ_- and θ_+ satisfy $|\theta_-|, |\theta_+| \leqq 90°$. This results in

$$|\theta_1| \leqq 90° \quad \text{and} \quad |\theta_2| \leqq 90°, \tag{16}$$

due to (14).

Equation (16) is important with respect to the convergence of the Jacobi SVD method. Forsythe and Henrici [9] have proven the convergence for cyclic orderings if the rotation angles θ_1 and θ_2 are restricted to a closed interval inside the open interval $(-90°, 90°)$. They have also demonstrated that this condition may fail to hold, i.e., θ_1 and θ_2 may be $\pm 90°$, if the off-diagonal elements b_{12} and b_{21} in (5) have to be exactly annihilated. As a remedy, they suggested an under- or overrotation by computing the two-sided rotation (4) with angles $(1-\gamma)\theta_1$ and $(1-\gamma)\theta_2$ $(-1 < \gamma < 1)$ and proved its convergence. In practice, however, the finite machine accuracy in the real arithmetic allows only an approximative computation of the rotation angles and implies under- or overrotations. So the Jacobi SVD method converges without using under- or overrotations as shown by the experimental results of Brent, Luk, and Van Loan [3]. In case of CORDIC implementations, the effect of implicit under- or overrotations is more apparent. The angles $\pm 90°$ can never be exactly calculated because of the limited angle resolution arctan (2^{-p}) of the CORDIC algorithm, where p denotes the mantissa length.

4. The CORDIC algorithm. In the previous section, we have seen that the main operations of the TPR-method are plane rotations and Cartesian-to-polar coordinates conversions. These operations can be carried out by multiplier–adder-based processors supported by software or special hardware units. An alternative approach is the use of dedicated processors that usually map algorithms more effectively to hardware. The CORDIC processor is such a powerful one for calculating trigonometric functions.

The CORDIC algorithm was originally designed by Volder [14] as an iterative procedure for computing plane rotations and Cartesian-to-polar coordinates conversions. It was later generalized and unified by Walther [15], enabling a CORDIC processor to calculate more functions, including hyperbolic functions, as well as multiplications and divisions. In the following, we consider Volder's CORDIC algorithm because only trigonometric functions are involved in SVD applications.

The CORDIC algorithm consists of iterative shift-add operations on a three-component vector,

$$\begin{pmatrix} x_{i+1} \\ y_{i+1} \end{pmatrix} = \begin{pmatrix} x_i - \sigma_i \delta_i y_i \\ y_i + \sigma_i \delta_i x_i \end{pmatrix} = \frac{1}{\cos(\alpha_i)} \begin{pmatrix} \cos(\alpha_i) & -\sigma_i \sin(\alpha_i) \\ \sigma_i \sin(\alpha_i) & \cos(\alpha_i) \end{pmatrix} \begin{pmatrix} x_i \\ y_i \end{pmatrix}, \tag{17}$$

$$z_{i+1} = z_i - \varepsilon \sigma_i \alpha_i \qquad (0 < \delta_i < 1;\ \sigma_i = \pm 1;\ \varepsilon = \pm 1;\ i = 0, 1, \cdots, n-1), \tag{18}$$

in which the iteration stepsize δ_i is defined by

$$\delta_i = \tan(\alpha_i) = 2^{-S(i)}. \tag{19}$$

The set of integers $\{S(i)\}$ parametrizing the iterations is called CORDIC sequence. Equation (17) can be interpreted, except for a scaling factor of

$$k_i = \frac{1}{\cos(\alpha_i)} = \sqrt{1+\delta_i^2}, \tag{20}$$

as a rotation of $(x_i, y_i)^T$ through the angle α_i, where the sign $\sigma_i = \pm 1$ gives the rotation direction. After n iterations, the results are given by

$$\begin{pmatrix} x_n \\ y_n \end{pmatrix} = K \begin{pmatrix} \cos\alpha & -\sin\alpha \\ \sin\alpha & \cos\alpha \end{pmatrix} \begin{pmatrix} x_0 \\ y_0 \end{pmatrix}, \tag{21}$$

$$z_n = z_0 - \varepsilon\alpha, \tag{22}$$

with the overall scaling factor $K = \prod_i k_i$ and the total rotation angle $\alpha = \sum_i \sigma_i \alpha_i$. Now, if the CORDIC sequence satisfies the following convergence condition

$$\alpha_i - \sum_{j=i+1}^{n-1} \alpha_j \leqq \alpha_{n-1} \qquad (i = 0, 1, \cdots, n-2), \tag{23}$$

we can choose the sign parameter

$$\sigma_i = \begin{cases} -\text{sign}\,(x_i y_i) & \text{for } y_n \to 0, \\ \text{sign}\,(\varepsilon z_i) & \text{for } z_n \to 0 \end{cases} \tag{24}$$

to force y_n or z_n to zero, provided that the input data x_0, y_0, and z_0 lie in the convergence region

$$C = \sum_{i=0}^{n-1} \alpha_i \geqq \begin{cases} |\arctan\,(y_0/x_0)| & \text{for } y_n \to 0, \\ |z_0| & \text{for } z_n \to 0. \end{cases} \tag{25}$$

In this way, two different types of CORDIC trigonometric functions can be computed (Table 1). In the mode $y_n \to 0$, the Cartesian coordinate (x_0, y_0) of a plane vector is converted to its polar representation, where the parameter $\varepsilon = \pm 1$ determines the sign of the phase angle calculated. When $z_n \to 0$, a given plane vector is rotated through the angle z_0, where $\varepsilon = \pm 1$ controls the rotation direction.

In Table 1, the principal value $|\arctan\,(y_0/x_0)| \leqq 90°$ of the inverse tangent function is calculated when computing Cartesian-to-polar coordinates conversions. Correspondingly, x_n may be positive or negative according to the sign of x_0. So, it is guaranteed that a vector is always rotated through the smaller angle onto the x-axis in accordance with (13). In this case, a convergence region of $C \geqq 90°$ is sufficient for the generation mode of the two-sided rotation.

One main drawback of the CORDIC algorithm is the need of correcting the scaling factor K that arises during the iterations (17). For example, if we use Volder's CORDIC sequence

$$\{S(i)\} = \{0, 1, 2, 3, \cdots, p-1, p\}, \tag{26}$$

with $n = p + 1$ CORDIC iterations for a mantissa accuracy of 2^{-p}, the scaling factor is $K \approx 1.64676$. Compensating this undesired scaling effect with a minimum number of computations is of particular importance.

Clearly, multiplying x_n and y_n in Table 1 by K^{-1} will degrade the algorithm performance substantially. Most of the scaling correction issues are based on shift-add operations. For a two-sided rotation that is implemented by four plane rotations, each matrix element undergoes two plane rotations so that the total scaling factor to be corrected is K^2. In this case, Cavallaro and Luk [16] have pointed out that there is a simple systematic approach for scaling correction when using the CORDIC sequence (26). They proposed to use $\lceil p/4 \rceil$ scaling iterations of the type $x \leftarrow x - 2^{-2j}x$ with $j \in J = \{1, 3, 5, \cdots, 2\lceil p/4 \rceil - 1\}$ and one shift operation 2^{-1}. The remaining scaling error is

TABLE 1
CORDIC *trigonometric functions* ($\varepsilon = \pm 1$).

$y_n \to 0$	$z_n \to 0$
$x_n = K\,\text{sign}\,(x_0)\sqrt{x_0^2 + y_0^2}$ $z_n = z_0 + \varepsilon \arctan\,(y_0/x_0)$	$x_n = K(x_0 \cos z_0 - \varepsilon y_0 \sin z_0)$ $y_n = K(\varepsilon x_0 \sin z_0 + y_0 \cos z_0)$

bounded by 2^{-p-1},[1]

$$(27)\qquad \left|1-2^{-1}\prod_{j\in J}(1-2^{-2j})\cdot K^2\right| = \left|1-2^{-1}\prod_{j\in J}(1-2^{-2j})\cdot\prod_{i=0}^{p}(1+2^{-2i})\right| < 2^{-p-1}.$$

This approach, however, fails in the TPR method. Here, each matrix element undergoes only one plane rotation. The scaling factor to be corrected is thus K rather than K^2. In order to solve this more difficult problem, different techniques have been developed in the literature. Haviland and Tuszynski [17] used similar scaling iterations as Cavallaro and Luk. Ahmed [18] repeated some CORDIC iterations to force K to a power of the machine radix. Delosme [19] combined both methods of Haviland, Tuszynski, and Ahmed for minimizing the number of computations. Deprettere, Dewilde, and Udo [20] suggested the double-shift concept.

We designed a computer program [21] for a systematic search of CORDIC sequences. We allow shifts parameters $S(i)$ $(i = 0, 1, \cdots, n-1)$ with differences $S(i+1) - S(i) \in \{0, 1, 2\}$ to provide more optimization freedom. For an efficient scaling correction, we require that the scaling factor K be corrected by a sequence of n_k shift-add operations,

$$(28)\qquad 2^{-T(0)}\prod_{j=1}^{n_k}(1+\eta(j)2^{-T(j)})\cdot K = 1+\Delta K \qquad (T(j)\,\text{integers}, \eta(j)=\pm 1).$$

These additional scaling iterations are parametrized by the set of signed integers $\{T(0), \eta(1)T(1), \cdots, \eta(n_k)T(n_k)\}$. The total number of iterations is $L = n + n_k$.

In (28), ΔK denotes the remaining relative scaling error after the scaling correction. We emphasize that this is a systematic error with a constant sign. By contrast, the other two types of CORDIC errors, the angular error due to the limited angle resolution and the rounding error, are of statistical nature because they may be positive or negative. The scaling error is thus more critical with respect to error accumulation when repeated CORDIC operations on the same data have to be computed as in SVD applications. Roughly speaking, the total scaling error after k CORDIC function calls increases linearly with k, a fact that has been verified by our numerical experiments. For this reason, we require $|\Delta K|$ to be much smaller than 2^{-p}.

We found catalogues of CORDIC sequences with complexity comparable to those of Cavallaro and Luk. In the following, five examples for different mantissa lengths $p =$ 16, 20, 24, 28, and 32, including the total number of iterations $L = n + n_k$, the convergence region C, and the remaining scaling error ΔK are given:

$p=16$: $\{S(i)\} = \{0\,1\,2\,3 \cdots 15\,16\}$,

$\{\eta(j)T(j)\} = \{1\,{+2}\,{-5}\,{+9}\,{+10}\}$, $L = 17+4$, $C \approx 100°$, $\Delta K \approx -2^{-16.01}$,[2]

$p=20$: $\{S(i)\} = \{0\,1\,2\,3 \cdots 19\,20\}$,

$\{\eta(j)T(j)\} = \{1\,{+2}\,{-5}\,{+9}\,{+10}\,{+16}\}$,

$L = 21+5$, $C \approx 100°$, $\Delta K \approx 2^{-23.05}$,

[1] When replacing $\lceil p/4 \rceil$ by $\lceil (p-1)/4 \rceil$ or $\lceil (p+1)/4 \rceil$, the upper bound in (27) becomes 2^{-p} or 2^{-p-2}, respectively.

[2] When appending an additional scaling iteration with $\eta(5)T(5) = +16$, the scaling accuracy can be enhanced to $\Delta K \approx 2^{-23}$.

$p=24$: $\{S(i)\}=\{1\,1\,2\,3\,3\,4\,5\,5\,6\,6\,7\,8\,8\,9\,10\cdots 23\,24\}$,

$\{\eta(j)T(j)\}=\{0-2+6\}$, $L=29+2$, $C\approx 91°$, $\Delta K\approx -2^{-29.13}$,

$p=28$: $\{S(i)\}=\{1\,1\,2\,3\,3\,4\,5\,5\,6\,6\,7\,8\,8\,9\,10\,11\,12\,13\,14\,14\,15\cdots 27\,28\}$,

$\{\eta(j)T(j)\}=\{0-2+6\}$, $L=34+2$, $C\approx 91°$, $\Delta K\approx 2^{-32.53}$,

$p=32$: $\{S(i)\}=\{0\,0\,1\,3\,3\,3\,4\,5\,6\,7\,8\,9\,9\,10\cdots 31\,32\}$,

$\{\eta(j)T(j)\}=\{1-3-8+16-25-27\}$,

$L=36+5$, $C\approx 145°$, $\Delta K\approx -2^{-39.93}$.

Remember that in order to meet the convergence condition (23) and to provide a convergence region $C\geqq 90°$, the minimum number of CORDIC iterations is $p+1$. So, for all CORDIC sequences given above, the number $L-(p+1)$ of additional iterations for scaling corrrection is $p/4$. Moreover, except for the first CORDIC sequence, the remaining scaling error $|\Delta K|$ is significantly smaller than 2^{-p}. This leads to improved numerical properties compared with other CORDIC sequences reported in the literature. We also remark that if the symmetric eigenvalue problem is considered for which a convergence region of $C\geqq 45°$ is sufficient [2], the total number of CORDIC iterations L can be further reduced. An example that is nearly identical to the last CORDIC sequence given above is

$p=32$: $\{S(i)\}=\{1\,3\,3\,3\,4\,5\,6\,7\,8\,9\,9\,10\cdots 31\,32\}$,

$\{\eta(j)T(j)\}=\{0-3-8+16-25-27\}$,

$L=34+5$, $C\approx 55°$, $\Delta K\approx -2^{-39.93}$.

For comparison, Delosme [5] has also given an optimized CORDIC sequence for the same situation. His sequence requires one iteration more ($L=40$) and achieves a scaling accuracy of $\Delta K\approx 2^{-33.16}$.

We suspect that similar results can also be obtained by using Deprettere's double-shift concept. However, this method requires a slightly increased hardware complexity and will not be discussed in this paper.

5. CORDIC implementation of the SVD PEs. For easy illustration, we first introduce a CORDIC processor symbol as shown in Fig. 2. The descriptions inside the box determine uniquely the function mode of the CORDIC processor according to Table 1. The output data x and y are assumed to be scaling corrected.

It is now simple to map the operations (8)–(11) and (12)–(15) of the TPR method onto a two CORDIC processor architecture. In Fig. 3, the diagonal PEs of the SVD array are implemented by two CORDIC processors and eight adders. The dotted inputs of the adders represent negated inputs. Because the diagonal PEs work in the generation mode,

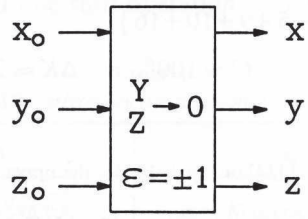

FIG. 2. CORDIC *symbol*.

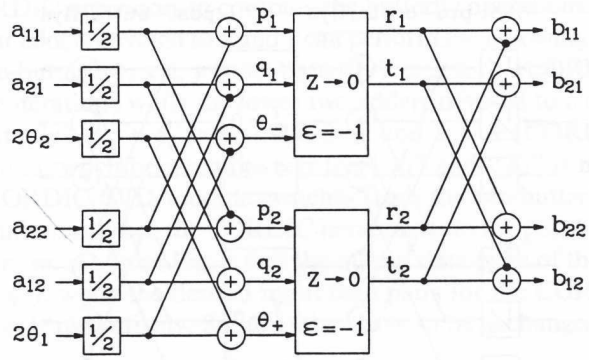

FIG. 3. CORDIC *implementation of the diagonal* PE *of the* SVD *array*.

both CORDIC processors are driven in the "$y \rightarrow 0$" mode for computing Cartesian-to-polar coordinates conversions. In Fig. 4, the off-diagonal PEs working in the rotation mode are implemented by two CORDIC processors and ten adders. Here, the CORDIC processors are driven in the "$z \rightarrow 0$" mode for performing plane rotations.

Obviously, both CORDIC implementations have nearly the same architecture. All PEs of the SVD array can thus be implemented by one unified CORDIC SVD module (Fig. 5) without considerably increased hardware cost. The different computation modes of the diagonal and off-diagonal PEs are easily "programmed" by one control bit. The resulting SVD array is similar to that in Fig. 1, but homogeneous with identical PEs.

We remark that Fig. 5 is more a "graphic program" describing the sequence of operations to be computed rather than a hardware block diagram. We show in the following that the 12 adders that are paired into three pre-butterflys and three post-butterflys can be integrated into the two CORDIC processors without separate hardware realizations. The Jacobi SVD method is a recursive method. Each PE of the SVD array has to exchange data with its diagonal neighbors. Because of this data dependency, only recursive CORDIC processors can be used here. This is an arithmetic unit consisting of mainly three adders and two barrel-shifters. It carries out the L iterations of the CORDIC algorithm in L cycles by using data feedback. The two CORDIC processors contained in one CORDIC SVD module require six adders altogether. So, it is natural to modify the CORDIC processor architecture slightly and to use the existing six adders for computing both the pre-butterfly and the post-butterfly operations. The resulting CORDIC SVD module has

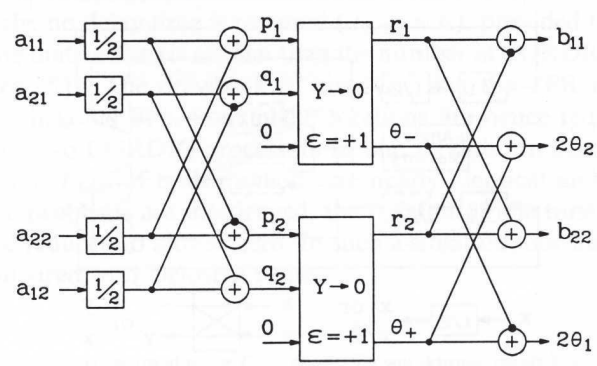

FIG. 4. CORDIC *implementation of the off-diagonal* PE *of the* SVD *array*.

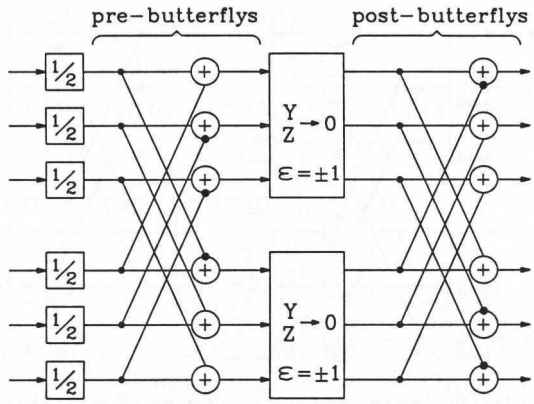

FIG. 5. *A unified* CORDIC SVD *module for implementing all* PEs *of the* SVD *array*.

the hardware complexity of two recursive CORDIC processors and requires a total computation time of $L + 2$ iterations.

In Fig. 6, the principal architecture of such a two CORDIC processor SVD module is shown. The dashed lines and boxes represent the additional hardware components

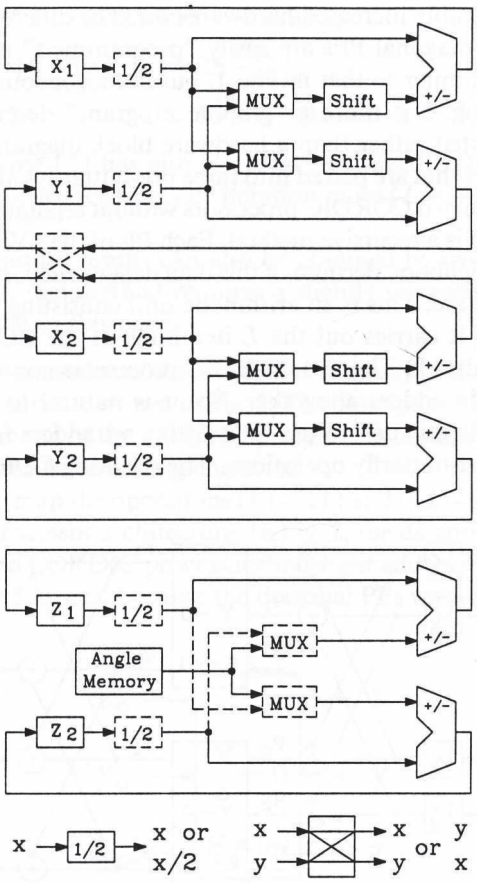

FIG. 6. *The principal architecture of the unified* CORDIC SVD *module*.

enabling the CORDIC processors to compute the butterfly operations. It is easily verified that the upper four adders devoted to x and y can perform the following types of operations $2^{-1}x \pm 2^{-1}y$ (pre-butterfly), $x \pm y$ (post-butterfly), $x \pm 2^{-s}y$ (CORDIC iteration) and $x \pm 2^{-s}x$ (scaling iteration) while the lower two adders devoted to z can compute $2^{-1}z_1 \pm 2^{-1}z_2$ (pre-butterfly), $z_1 \pm z_2$ (post-butterfly), and $z \pm \alpha$ (CORDIC iteration), respectively. The cross switch between the registers "Y_1" and "X_2" is needed to exchange data when the CORDIC SVD module switches from the pre-butterfly operations into the CORDIC iterations or from the CORDIC iterations into the post-butterfly operations, respectively. Then, we see from Fig. 3 that the output data pairs of the pre-butterflys are (p_1, p_2) and (q_1, q_2), while the desired input data pairs for the CORDIC iterations are (p_1, q_1) and (p_2, q_2), respectively. So, p_2 and q_1 have to be exchanged.

6. Comparisons. We now compare the new CORDIC SVD module with those proposed by Cavallaro and Luk [4] and Delosme [5]. Let A_{csvd} and T_{csvd} denote the area and time complexity of a CORDIC SVD module and A_{cordic} and T_{cordic} those of a CORDIC processor, respectively. Cavallaro and Luk have shown that their most efficient parallel diagonalization method requires $A_{\text{csvd}} \approx 2A_{\text{cordic}}$ and $T_{\text{csvd}} \approx 3T_{\text{cordic}}$ for the diagonal PEs and $A_{\text{csvd}} \approx 2A_{\text{cordic}}$ and $T_{\text{csvd}} \approx 2T_{\text{cordic}}$ for the off-diagonal PEs. By using the TPR method, we require $T_{\text{csvd}} \approx 2A_{\text{cordic}}$ and $T_{\text{csvd}} \approx T_{\text{cordic}}$ for all PEs. In other words, having approximately the same hardware complexity, the computation time is reduced by more than 50 percent.

A comparison to Delosme's method is more difficult because he follows a quite different approach. Therefore, only rough performance estimates are given here. In our method, we compute the rotation angles explicitly. After these computations have been completed in the diagonal PEs, the angles propagate to the off-diagonal ones. We assume that the propagation from one PE to its neighbors takes one cycle T_{cycle}, the time required for computing one CORDIC iteration. This implies local communications without broadcasting data. At the beginning of the second propagation cycle, the angles reach the diagonal neighbors of the diagonal PEs which complete their computations after T_{csvd}. This means that the diagonal PEs have to wait for a delay time $T_{\text{delay}} = T_{\text{cycle}} + T_{\text{csvd}}$ before they can exchange data with their diagonal neighbors.[3] The total time elapsed between two adjacent activities at each PE is thus $T_{\text{csvd}} + T_{\text{delay}} = 2T_{\text{csvd}} + T_{\text{cycle}} \approx 2T_{\text{cordic}}$ because T_{cycle} is negligible with respect to $T_{\text{cordic}} = L \cdot T_{\text{cycle}}$.

Delosme does not compute the rotation angles explicitly. He rather calculates encodings of the angles, i.e., sequences of signs ± 1, and sends them to the off-diagonal PEs. This enables overlap of diagonal and off-diagonal rotations because the encoding signs are recursively obtained and become available before the completion of diagonal operations. Accordingly, no delay time is required ($T_{\text{delay}} = 0$), provided that the SVD array size (the half of the matrix size) is smaller than the number of CORDIC scaling iterations n_k (for details, see [5]). The drawback is, however, that the TPR method cannot be applied to the off-diagonal PEs. Four plane rotations are hence required, resulting in $T_{\text{cvsd}} = 2T_{\text{cordic}}$ for two CORDIC processors in one module. In other words, the time complexities $T_{\text{csvd}} + T_{\text{delay}}$ of both methods are nearly identical and equal $2T_{\text{cordic}}$. If, however, multiple problems are interleaved, the fraction of idle time that is 50 percent in our case can be reduced to almost zero. In such a situation, our method provides the double speed compared with Delosme's one.

[3] If the propagation time is assumed to be T_{csvd}, we get the well-known result $T_{\text{delay}} = 2T_{\text{csvd}}$ given by Brent and Luk [2].

In terms of area complexity, both CORDIC SVD modules contain two CORDIC processors. Our module consists of essentially six adders, four barrel shifters, and one ROM table containing n angle values. Delosme's architecture requires four carry-save adders, four adders, and eight barrel shifters. So, as a rough estimate, both SVD modules have the same order of area complexities.

Perhaps the most important advantage of Delosme's approach is the 2-bit wide horizontal and vertical data connections for sending angle encodings serially rather than sending the full angle values in parallel. The prices are the upper bound of the SVD array size depending on the number of CORDIC scaling iterations, the relatively complicated timing, and a nonregular CORDIC architecture design. We also mention that while Delosme's method presumes a CORDIC implementation, the TPR method is applicable to other computing architectures.

7. Other applications of the TPR method. Another advantage of the TPR method seems to be the relatively wide range of applications. We indicate some of them in the following.

For the SVD of a rectangular matrix, a well-known method is first to triangularize the matrix by QR decomposition and then to apply the Jacobi SVD procedure to the triangular factor. Luk [22] has shown that both steps can be implemented by one triangular systolic array. Each PE contains a 2×2 submatrix. It applies two plane rotations (through the same angle) to the two column vectors at the QR step and a two-sided rotation at the SVD step. For computing the SVD step, the PE can be realized by the CORDIC SVD module, as before. On the other side, the two CORDIC processors contained in the module are also appropriate to perform the two-plane rotations of the QR step. The CORDIC SVD module presented in this paper thus provides a suitable PE for Luk's triangular SVD array.

Stewart [23] has proposed a square systolic array for computing the Schur decomposition (SD) of a non-Hermitian matrix which, for example, is useful for evaluating the eigenvalues of the matrix. His approach is similar to the Jacobi SVD method. It is based on applying a sequence of two-sided rotations to 2×2 submatrices, where the left and right rotation angles are identical to make the diagonal submatrices upper triangular. While the diagonal PEs perform operations different from those in SVD, the off-diagonal PEs have exactly the same computational task as in SVD computing. Therefore, the CORDIC SVD module can also be used in Stewart's SD array.

Even in sequential computations on a uniprocessor system, one can still apply the TPR method to reduce the computational complexity of two-sided rotations.

8. Conclusion. We have investigated a novel algorithm for computing two-sided rotations requiring only two plane rotations and a few additions. This results in significantly reduced computations of various SVD and SD methods. For parallel implementations, we have presented a unified CORDIC SVD module for implementing all PEs of the SVD array given by Brent and Luk. This leads to a homogeneous array architecture that is simpler in hardware and offers twice the computational speed of that of Cavallaro and Luk. Moreover, we have pointed out that the same CORDIC SVD module can be efficiently used in other array architectures, such as Luk's triangular SVD array and Stewart's SD array.

Acknowledgments. The authors thank the referees and the editor for their valuable comments on this paper.

MediaTek Exhibit 1021, Page 90 of 105

REFERENCES

[1] J. M. SPEISER, *Signal processing computational needs*, in Proc. SPIE Advanced Algorithms and Architectures for Signal Processing I, Vol. 696, Society of Photo-optical Instrumentation Engineers, 1986, pp. 2–6.

[2] R. P. BRENT AND F. T. LUK, *The solution of singular value and symmetric eigenvalue problems on multiprocessor arrays*, SIAM J. Sci. Statist. Comput., 6 (1985), pp. 69–84.

[3] R. P. BRENT, F. T. LUK, AND C. F. VAN LOAN, *Computation of the singular value decomposition using mesh-connected processors*, J. VLSI Comput. Syst., 1 (1985), pp. 242–270.

[4] J. R. CAVALLARO AND F. T. LUK, *Architectures for a* CORDIC SVD *processor*, Proc. SPIE Real-Time Signal Processing IX, Vol. 698, Society of Photo-optical Instrumentation Engineers, 1986, pp. 45–53.

[5] J. M. DELOSME, *A processor for two-dimensional symmetric eigenvalue and singular value arrays*, in Proc. 21st Asilomar Conference on Circuits, Systems and Computers, November 1987.

[6] ——, CORDIC *algorithms: Theory and extensions*, Proc. SPIE Advanced Algorithms and Architectures for Signal Processing IV, Vol. 1152, Society of Photo-optical Instrumentation Engineers, August 1989, pp. 131–145.

[7] C. G. J. JACOBI, *Über ein leichtes Verfahren die in der Theorie der Säkularstörungen vorkommenden Gleichungen numerisch aufzulösen*, J. Reine Angew. Math., 30 (1846), pp. 51–95.

[8] E. G. KOGBETLIANTZ, *Solution of linear equations by diagonalization of coefficient matrices*, Quart. Appl. Math., 13 (1955), pp. 123–132.

[9] G. E. FORSYTHE AND P. HENRICI, *The cyclic Jacobi method for computing the principal values of a complex matrix*, Trans. Amer. Math. Soc., 94 (1960), pp. 1–23.

[10] A. H. SAMEH, *Solving the linear least squares problem on a linear array of processors*, in Algorithmically Specialized Parallel Computers, L. Synder et al., eds., Academic Press, New York, 1985, pp. 191–200.

[11] U. SCHWIEGELSHOHN AND L. THIELE, *A systolic algorithm for cyclic-by-rows* SVD, in Proc. IEEE International Conference on Acoustics, Speech and Signal Processing, 1987, pp. 768–770.

[12] F. T. LUK AND H. PARK, *On the equivalence and convergence of parallel Jacobi* SVD *algorithms*, in Proc. SPIE Advanced Algorithms and Architectures for Signal Processing II, Vol. 826, Society of Photo-optical Instrumentation Engineers, 1987, pp. 152–159.

[13] G. H. GOLUB AND C. F. VAN LOAN, *Matrix Computations*, The Johns Hopkins University Press, Baltimore, MD, 1983, p. 44.

[14] J. E. VOLDER, *The* CORDIC *trigonometric computing technique*, IRE Trans. Electronic Comput., 8 (1959), pp. 330–334.

[15] J. S. WALTHER, *A unified algorithm for elementary functions*, in Proc. Spring Joint Computer Conference, AFIPS Press, New Jersey, 1971, pp. 379–385.

[16] J. R. CAVALLARO AND F. T. LUK, CORDIC *arithmetic for an* SVD *processor*, J. Parallel Distributed Comput., 5 (1988), pp. 271–290.

[17] G. L. HAVILAND AND A. A. TUSZYNSKI, *A* CORDIC *arithmetic processor chip*, IEEE Trans. Comput., 29 (1980), pp. 68–79.

[18] H. M. AHMED, *Signal processing algorithms and architectures*, Ph.D. thesis, Department of Electrical Engineering, Stanford University, Stanford, CA, December 1981.

[19] J. M. DELOSME, VLSI *implementation of rotations in pseudo-Euclidean spaces*, in Proc. IEEE International Conference on Acoustics, Speech and Signal Processing, Boston, 1983, pp. 927–930.

[20] E. F. DEPRETTERE, P. DEWILDE, AND R. UDO, *Pipelined* CORDIC *architectures for fast* VLSI *filtering and array processing*, in Proc. IEEE International Conference on Acoustics, Speech and Signal Processing, San Diego, CA, March 1984, pp. 41A.6.1–41A.6.4.

[21] D. KÖNIG AND J. F. BÖHME, *Optimizing the* CORDIC *algorithm for processors with pipeline architecture*, in Proc. EUSIPCO, North-Holland, Elsevier Science Publishers, Amsterdam, 1990, pp. 1391–1394.

[22] F. T. LUK, *A triangular processor array for computing singular values*, Linear Algebra Appl., 77 (1986), pp. 259–273.

[23] G. W. STEWART, *A Jacobi-like algorithm for computing the Schur decomposition of a non-Hermitian matrix*, SIAM J. Sci. Statist. Comput., 6 (1985), pp. 853–864.

MediaTek Exhibit 1021, Page 91 of 105

Attachment B

MARC Bibliographic Record

```
LEADER   02139mas a2200517 a 4500
   001   9911889023602122
   005   20150417220014.0
   008   870909c19889999pauqr1p 0 a0eng d
   010         $a 88649193 //r97$zsn 87002493
   012         $a2$i8908$j1$k1$l1$m1
   022   0_    $a0895-4798
   030         $aSJMAEL
   032         $a530050$bUSPS
   035         $a(OCoLC)ocm16655630
   035         $a(OCoLC)ocm36896669
   035         $9AJK5205UW
   035         $a1188902
   035         $a(WU)1188902-uwmadisondb
   035         $a(EXLNZ-01UWI_NETWORK)999583437602121
   037         $bCustomer Service, SIAM, 3600 University City Science Center, Philadelpia, PA 19104-2688$c$31.(memb)
               $88.(nonmemb/libr)
   040         $aNSD$beng$cNSD$dPIT$dCOO$dNSD$dDLC$dNST$dNSD$dNST$dNSD$dDLC$dNST$dIUL$dNST$dHUL$dNST$dGUA$dNST$dNSD$dGZM
   042         $ansdp$alc
   049         $aGZMA
   050   00    $aQA188$b.S53
   082   00    $a512.9/434/05$220
   098   11    $aS$aSA101$aJMA
   210   0_    $aSIAM j. matrix anal. appl.$b(Print)
   222   _0    $aSIAM journal on matrix analysis and applications$b(Print)
   245   00    $aSIAM journal on matrix analysis and applications :$ba publication of the Society for Industrial and
               Applied Mathematics /$cSIAM.
   246   0_    $aSociety for Industrial and Applied Mathematics journal on matrix analysis and applications
   246   10    $aJournal on matrix analysis and applications
```

```
246    10    $aMatrix analysis and applications
260          $aPhiladelphia, Pa. :$bSociety for Industrial and Applied Mathematics,$cc1988-
300          $avolumes :$billustrations ;$c26 cm
310          $aQuarterly
336          $atext$btxt$2rdacontent
337          $aunmediated$bn$2rdamedia
338          $avolume$bnc$2rdacarrier
362    0_    $aVol. 9, no. 1 (Jan. 1988)-
530          $aAlso available on the World Wide Web.
650    _0    $aMatrices$vPeriodicals.
650    _0    $aMathematics$vPeriodicals.
710    2_    $aSociety for Industrial and Applied Mathematics.
776    1_    $tSIAM journal on matrix analysis and applications (Online)$x1095-7162$w(DLC)sn 97004545
780    01    $tSIAM journal on algebraic and discrete methods$x0196-5212$w(OCoLC)05842627$w(DLC) 80645376
856    41    $uhttp://www.dummy.edu
```

MMS IDs

Document ID:

999583437602121

Network Electronic IDs:

Network Physical IDs:

999583437602121

mms_mad_ids:

9911889023602122

mms_ml_ids:

9917615053402124

Attachment C

LC control no.: sh 85082210
LCCN Permalink: https://lccn.loc.gov/sh85082210
HEADING: Matrices

000 00579cz a2200229n 450
001 4732733
005 20120327093138.0
008 860211|| anannbabn |b ana
010 __ |**a** sh 85082210
035 __ |**a** (DLC)sh 85082210
035 __ |**a** (DLC)79418
040 __ |**a** DLC |**c** DLC |**d** DLC
053 _0 |**a** QA188 |**b** QA196 |**c** Mathematics
150 __ |**a** Matrices
450 __ |**a** Algebra, Matrix
450 __ |**a** Cracovians (Mathematics)
450 __ |**a** Matrix algebra
450 __ |**a** Matrixes (Algebra)
550 __ |**w** g |**a** Algebra, Abstract
550 __ |**w** g |**a** Algebra, Universal
906 __ |**t** 64-- |**u** ---- |**v** 0
953 __ |**a** xx00

Save, Print or Email Records (View Help)

Select Download Format: Text (Labelled Display) Press to SAVE or PRINT

Email Text (Labelled Display) to:
Press to SEND EMAIL

MediaTek Exhibit 1021, Page 96 of 105

URL: https://www.loc.gov/

Mailing Address:
101 Independence Ave, S.E.
Washington, DC 20540

Library of Congress Online Catalog
URL: https://catalog.loc.gov/

Questions, comments, error reports: Contact Us

Attachment D

LC control no.: sh 85099890

LCCN Permalink: https://lccn.loc.gov/sh85099890

HEADING: Periodicals

000 01324cz a2200337n 450

001 4749694

005 20120717060125.0

008 860211 | anannbabn |b ana

010 __ |**a** sh 85099890

035 __ |**a** (DLC)sh 85099890

035 __ |**a** (DLC)6226910

035 __ |**a** (DLC)sp 85099890

035 __ |**a** (DLC)314952

040 __ |**a** DLC |**c** DLC |**d** DLC

053 _0 |**a** AP |**c** General periodicals

053 _0 |**a** PN4700 |**b** PN5650 |**c** History

150 __ |**a** Periodicals

360 __ |**i** subdivision |**a** Periodicals |**i** under specific subjects, e.g. |**a** Engineering--Periodicals; United States--History--Periodicals

450 __ |**a** Journals (Periodicals)

450 __ |**a** Magazines

550 __ |**w** g |**a** Library materials

550 __ |**w** g |**a** Mass media

550 __ |**w** g |**a** Serial publications

550 __ |**a** Newspapers

550 __ |**a** Press

670 __ |**a** UMI business vocab. |**b** (Journals)

680 __ |**i** Here are entered works on the periodicals of the world and, with appropriate subdivisions, works on special aspects or sections of periodicals. Works on periodicals in a specific language, or in a specific country or larger area, are entered under the adjectival form of the language or area, e.g. |**a** Arabic periodicals; Canadian periodicals.

906 __ |**t** 0420 |**u** te03 |**v** 0

910 __ |**a** Proposal saved by tc03 on 05/14/2012 at 17:15:30

953 __ |**a** xx00 |**b** td14

906 __ |**t** 1206 |**v** 0

Previous Next

Save, Print or Email Records (View Help)
Select Download Format: Text (Labelled Display) Press to SAVE or PRINT
Email Text (Labelled Display) to: Press to SEND EMAIL

Help - Search - Search History - Headings List - Start Over

Library of Congress
URL: https://www.loc.gov/

Mailing Address:
101 Independence Ave,
S.E.
Washington, DC 20540

Library of Congress Authorities
URL: http://authorities.loc.gov/
Library of Congress Online Catalog
URL: https://catalog.loc.gov/

Questions, comments, error reports: Contact Us

Attachment E

LC control no.: sh 85082151
LCCN Permalink: https://lccn.loc.gov/sh85082151
HEADING: Mathematics Periodicals

000 00365cz a2200157n 450
001 4732674
005 20110729112935.0
008 860211|| anannbabn |n ana
010 __ |**a** sh 85082151
035 __ |**a** (DLC)sh 85082151
035 __ |**a** (DLC)79359
040 __ |**a** DLC |**c** DLC |**d** DLC
053 _0 |**a** QA1
150 __ |**a** Mathematics |**v** Periodicals
906 __ |**t** 9999 |**u** ---- |**v** 0
953 __ |**a** xx00 |**b** ta25

Previous Next

Save, Print or Email Records (View Help)

Select Download Format: Text (Labelled Display) Press to SAVE or PRINT

Email Text (Labelled Display) to: Press to SEND EMAIL

Library of Congress
URL: https://www.loc.gov/

Mailing Address:
101 Independence Ave, S.E.
Washington, DC 20540

Library of Congress Authorities
URL: http://authorities.loc.gov/
Library of Congress Online Catalog
URL: https://catalog.loc.gov/

Questions, comments, error reports: Contact Us

Attachment F

OCLC 16655630 **No holdings in XXX - 328 other holdings**

Continuing Resources

								Rec Stat		**Entered**	19870909	**Replaced**	20190208061533.1
Type	a	**ELvl**		**Srce**	c	**GPub**		**Ctrl**		**Lang**	eng		
BLvl	s	**Form**		**Conf**	0	**Freq**	q	**MRec**		**Ctry**	pau		
S/L	0	**Orig**		**EntW**		**Regl**	r	**Alph**	a				
Desc	a	**SrTp**	p	**Cont**		**DtSt**	c	**Dates**	1988	, 9999			

010 88649193 $z sn 87002493
040 NSD $b eng $c NSD $d PIT $d COO $d NSD $d DLC $d NST $d NSD $d NST $d NSD $d DLC $d NST $d IUL $d NST $d HUL $d NST $d GUA $d NST $d NSD $d MYG $d OCL $d SYS $d OCLCQ $d NLGGC $d LVB $d EEM $d NSD $d OCLCQ $d OCLCF $d I8M $d UAB $d OCLCQ $d CSJ $d OCLCQ $d GILDS $d CPO $d OCLCQ $d OCLCO $d UIU $d OCLCO $d TYC
012 2 $i 8908 $j 1 $k 1 $l 1 $m 1
019 255557376 $a 970486967 $a 1001114798 $a 1004318031 $a 1011925655 $a 1029241359
022 0 0895-4798 $l 0895-4798 $2 1
030 SJMAEL
032 530050 $b USPS
037 $b Customer Service, SIAM, 1400 Architects Building, 117 S. 17th St., Philadelphia, PA 19103-5052
042 nsdp $a pcc
050 00 QA188 $b .S53
082 00 512.9/434/05 $2 20
090 $b
210 0 SIAM j. matrix anal. appl. $b (Print)
222 0 SIAM journal on matrix analysis and applications $b (Print)
245 00 SIAM journal on matrix analysis and applications : $b a publication of the Society for Industrial and Applied Mathematics / $c SIAM.
246 3 Society for Industrial and Applied Mathematics journal on matrix analysis and applications
246 30 Journal on matrix analysis and applications
246 30 Matrix analysis and applications
260 Philadelphia, Pa. : $b Society for Industrial and Applied Mathematics, $c ©1988-
300 volumes : $b illustrations ; $c 26 cm
310 Quarterly
336 text $b txt $2 rdacontent
337 unmediated $b n $2 rdamedia
338 volume $b nc $2 rdacarrier
362 0 Vol. 9, no. 1 (Jan. 1988)-
530 Also issued online.
588 Latest issue consulted: Vol. 9, no. 4 (Oct. 1988).
650 0 Matrices $v Periodicals.
650 0 Mathematics $v Periodicals.
650 6 Matrices $v Périodiques.
650 6 Algèbre $v Périodiques.
650 6 Mathématiques $v Périodiques.
650 7 Mathematics. $2 fast $0 (OCoLC)fst01012163

650 7 Matrices. $2 fast $0 (OCoLC)fst01012399
650 17 Matrices. $2 gtt
650 17 Toepassingen. $2 gtt
655 7 Periodicals. $2 fast $0 (OCoLC)fst01411641
655 7 Periodicals. $2 lcgft
710 2 Society for Industrial and Applied Mathematics.
776 08 $i Online version: $t SIAM journal on matrix analysis and applications (Online) $x 1095-7162 $w (DLC)sn 97004545 $w (OCoLC)36896669
780 01 Society for Industrial and Applied Mathematics. $t SIAM journal on algebraic and discrete methods $x 0196-5212 $w (DLC) 80645376 $w (OCoLC)5842627
850 AAP $a AU $a ArU $a AzTeS $a CPT $a CSt $a CU $a CU-A $a CU-I $a CU-Riv $a CU-S $a CU-SB $a CaBVaU $a CaNSHD $a CaOLUM $a CaOTU $a CaSSU $a CoFS $a CoU $a CtY-KS $a DGW $a DLC $a DeU $a FU $a GASU $a GU $a ICarbS $a IEN $a IaAS $a IaU $a InLP $a InU $a KyLoU $a KyU $a LNT $a MBU $a MCM $a MH-GM $a MNS $a MWhB $a MdU $a MiDW $a MiEM $a MiU $a MoKL $a MoU $a NBuU-SE $a NIC $a NN $a NNC $a NRU $a NSyU $a NcD $a NcRS $a NcU $a NcWsW $a NjP $a NjR $a OCU $a OU $a OrCS $a OrU-S $a PBL $a PPD $a PPiC $a PPiU $a PU $a RPB-S $a TU $a TxCM $a TxHR $a ULA $a UU $a ViBlbV $a ViU $a ViW $a WaU $a WvU $a WyU
856 41 $u http://epubs.siam.org/sam-bin/dbq/toclist/SIMAX