US011175405B2

(12) **United States Patent**
Pacala et al.

(10) **Patent No.: US 11,175,405 B2**
(45) **Date of Patent: *Nov. 16, 2021**

(54) **SPINNING LIDAR UNIT WITH MICRO-OPTICS ALIGNED BEHIND STATIONARY WINDOW**

(71) Applicant: **Ouster, Inc.**, San Francisco, CA (US)

(72) Inventors: **Angus Pacala**, San Francisco, CA (US); **Mark Frichtl**, San Francisco, CA (US); **Marvin Shu**, San Francisco, CA (US)

(73) Assignee: **OUSTER, INC.**, San Francisco, CA (US)

(*) Notice: Subject to any disclaimer, the term of this patent is extended or adjusted under 35 U.S.C. 154(b) by 612 days.

This patent is subject to a terminal disclaimer.

(21) Appl. No.: **15/979,266**

(22) Filed: **May 14, 2018**

(65) **Prior Publication Data**

US 2018/0329061 A1 Nov. 15, 2018

Related U.S. Application Data

(60) Provisional application No. 62/506,449, filed on May 15, 2017, provisional application No. 62/506,437, (Continued)

(51) **Int. Cl.**
G01S 17/10 (2020.01)
G02B 27/30 (2006.01)
(Continued)

(52) **U.S. Cl.**
CPC ***G01S 17/10*** (2013.01); ***G01S 7/486*** (2013.01); ***G01S 7/4813*** (2013.01);
(Continued)

(58) **Field of Classification Search**
None
See application file for complete search history.

(56) **References Cited**

U.S. PATENT DOCUMENTS

4,003,660 A * 1/1977 Christie, Jr. B41F 33/0036 356/407
4,275,950 A * 6/1981 Meyer G02B 3/00 126/698
(Continued)

FOREIGN PATENT DOCUMENTS

CN 1918427 2/2007
CN 101413905 4/2009
(Continued)

OTHER PUBLICATIONS

European Patent Office; Extended European Search Report received in European Application No. 16865297.2, dated Jun. 11, 2019; 9 pages.
(Continued)

Primary Examiner — Yuqing Xiao
Assistant Examiner — Amir J Askarian
(74) *Attorney, Agent, or Firm* — Kilpatrick Townsend & Stockton LLP

(57) **ABSTRACT**

Embodiments describe optical imagers that include one or more micro-optic components. Some imagers can be passive imagers that include a light detection system for receiving ambient light from a field. Some imagers can be active imagers that include a light emission system in addition to the light detection system. The light emission system can be configured to emit light into the field such that emitted light is reflected off surfaces of an object in the field and received by the light detection system. In some embodiments, the light detection system and/or the light emission system includes micro-optic components for improving operational performance.

34 Claims, 36 Drawing Sheets

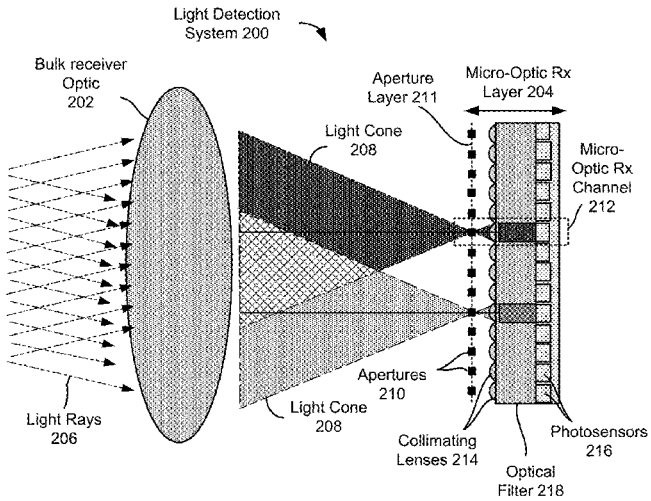

Related U.S. Application Data

filed on May 15, 2017, provisional application No. 62/506,445, filed on May 15, 2017, provisional application No. 62/515,291, filed on Jun. 5, 2017.

(51) **Int. Cl.**

G01S 7/486	(2020.01)
G02B 27/00	(2006.01)
G02B 27/09	(2006.01)
G01S 17/42	(2006.01)
G01S 7/481	(2006.01)
G01S 7/4863	(2020.01)
G01S 7/4865	(2020.01)
H01L 31/0232	(2014.01)
H01L 31/0216	(2014.01)
G01S 17/931	(2020.01)
G01S 17/89	(2020.01)
H01L 27/146	(2006.01)
H01L 31/02	(2006.01)
G01S 17/08	(2006.01)
H04B 10/50	(2013.01)
H04B 10/67	(2013.01)
H04B 10/69	(2013.01)
H04B 10/80	(2013.01)
H01L 27/144	(2006.01)
H01L 31/107	(2006.01)
G02B 5/20	(2006.01)

(52) **U.S. Cl.**

CPC ***G01S 7/4815*** (2013.01); ***G01S 7/4816*** (2013.01); ***G01S 7/4817*** (2013.01); ***G01S 7/4863*** (2013.01); ***G01S 7/4865*** (2013.01); ***G01S 17/08*** (2013.01); ***G01S 17/42*** (2013.01); ***G01S 17/89*** (2013.01); ***G01S 17/931*** (2020.01); ***G02B 27/0037*** (2013.01); ***G02B 27/0955*** (2013.01); ***G02B 27/30*** (2013.01); ***H01L 27/1446*** (2013.01); ***H01L 27/14643*** (2013.01); ***H01L 31/02027*** (2013.01); ***H01L 31/02162*** (2013.01); ***H01L 31/02164*** (2013.01); ***H01L 31/02165*** (2013.01); ***H01L 31/02325*** (2013.01); ***H01L 31/02327*** (2013.01); ***H01L 31/107*** (2013.01); ***H04B 10/503*** (2013.01); ***H04B 10/675*** (2013.01); ***H04B 10/6973*** (2013.01); ***H04B 10/801*** (2013.01); *G02B 5/205* (2013.01)

(56) **References Cited**

U.S. PATENT DOCUMENTS

4,358,851	A	11/1982	Scifres et al.
4,634,272	A	1/1987	Endo
4,676,599	A	6/1987	Cruz
4,702,600	A	10/1987	Handrich et al.
4,744,667	A	5/1988	Fay et al.
4,851,664	A	7/1989	Rieger
5,084,596	A	1/1992	Borsh
5,267,016	A	11/1993	Meinzer et al.
5,288,992	A	2/1994	Fohl
5,745,153	A	4/1998	Kessler et al.
5,982,552	A	11/1999	Nakama et al.
6,014,232	A	1/2000	Clarke
6,133,989	A	10/2000	Stettner et al.
6,255,133	B1	7/2001	Ormond
6,374,024	B1	4/2002	Iijima
6,414,746	B1	7/2002	Stettner et al.
6,433,934	B1	8/2002	Reznichenko et al.
6,690,019	B2	2/2004	Stettner et al.
6,721,262	B1	4/2004	Jordache et al.
7,091,462	B2	8/2006	Wilson et al.
D531,525	S	11/2006	Dold et al.
7,170,542	B2	1/2007	Hanina et al.
7,196,301	B2	3/2007	Thomas et al.
7,295,298	B2	11/2007	Willhoeft et al.
7,345,271	B2	3/2008	Boehlau et al.
7,421,159	B2	9/2008	Yang et al.
7,433,042	B1	10/2008	Cavanaugh et al.
7,808,706	B2	10/2010	Fadel et al.
7,969,558	B2	6/2011	Hall
8,013,983	B2	9/2011	Lin et al.
8,130,367	B2	3/2012	Stettner et al.
D659,030	S	5/2012	Anselment et al.
8,319,949	B2	11/2012	Cantin et al.
8,089,618	B2	12/2012	Yang
8,330,840	B2	12/2012	Lenchenkov
8,374,405	B2	2/2013	Lee et al.
8,384,997	B2	2/2013	Shpunt et al.
8,494,252	B2	7/2013	Freedman et al.
8,633,384	B1	1/2014	Shotey et al.
8,675,181	B2	3/2014	Hall
8,717,488	B2	5/2014	Shpunt et al.
8,742,325	B1	6/2014	Droz et al.
8,743,176	B2	6/2014	Stettner et al.
8,761,495	B2	6/2014	Freedman et al.
8,767,190	B2	7/2014	Hall
8,829,406	B2	9/2014	Akerman et al.
8,836,922	B1	9/2014	Pennecot et al.
8,848,039	B2	9/2014	Spektor et al.
9,041,915	B2	5/2015	Earhart et al.
9,063,549	B1	6/2015	Pennecot et al.
9,071,763	B1	6/2015	Templeton et al.
9,086,273	B1	7/2015	Gruver et al.
9,111,444	B2	8/2015	Kaganovich
9,157,790	B2	10/2015	Shpunt et al.
9,164,511	B1	10/2015	Ferguson et al.
9,176,051	B2	11/2015	Mappes et al.
9,229,109	B2	1/2016	Stettner et al.
9,285,464	B2	3/2016	Pennecot et al.
9,299,731	B1	3/2016	Lenius et al.
9,366,573	B2	6/2016	Geelen et al.
9,368,936	B1	6/2016	Lenius et al.
9,369,689	B1	6/2016	Tran et al.
9,285,477	B1	7/2016	Smith et al.
9,383,753	B1	7/2016	Templeton et al.
9,425,654	B2	8/2016	Lenius et al.
9,435,891	B2	9/2016	Oggier
9,470,520	B2	10/2016	Schwarz et al.
9,489,601	B2	11/2016	Fairfield et al.
9,525,863	B2	12/2016	Nawasra et al.
9,529,079	B1	12/2016	Droz et al.
9,551,791	B2	1/2017	Van Den Bossche et al.
9,882,433	B2	1/2018	Lenius et al.
9,917,423	B2	3/2018	Song
9,935,514	B1	4/2018	Lenius et al.
9,989,406	B2	6/2018	Pacala
9,992,477	B2	6/2018	Pacala
10,063,849	B2	8/2018	Pacala
10,066,990	B2	9/2018	Rosen et al.
10,183,541	B2	1/2019	Van Den Bossche et al.
10,222,458	B2	3/2019	Pacala et al.
10,222,475	B2	3/2019	Pacala et al.
10,663,586	B2	5/2020	Pacala et al.
10,809,359	B2	10/2020	Pacala et al.
11,025,885	B2	6/2021	Pacala et al.
11,086,013	B2	8/2021	Pacala et al.
2003/0006676	A1	1/2003	Smith et al.
2003/0047752	A1	3/2003	Campbell
2004/0061502	A1	4/2004	Hasser
2004/0223071	A1	11/2004	Wells
2005/0030409	A1	2/2005	Matherson
2005/0035474	A1	2/2005	Itoh
2006/0244851	A1	11/2006	Cartlidge
2007/0002434	A1*	1/2007	Juskaitis G02B 27/0031 359/368
2007/0007563	A1	1/2007	Mouli
2007/0058981	A1*	3/2007	Tamanuki G02B 6/423 398/141
2007/0060806	A1	3/2007	Hunter et al.
2007/0228262	A1	10/2007	Cantin et al.

(56) **References Cited**

U.S. PATENT DOCUMENTS

2008/0153189 A1 6/2008 Plaine
2009/0016642 A1 1/2009 Hart
2009/0040629 A1 2/2009 Bechtel
2009/0179142 A1 7/2009 Duparre et al.
2009/0295910 A1 12/2009 Mir et al.
2010/0008588 A1 1/2010 Feldkhun et al.
2010/0020306 A1 1/2010 Hall
2010/0110275 A1 5/2010 Mathieu
2010/0123893 A1 5/2010 Yanq
2010/0204964 A1 8/2010 Pack et al.
2011/0025843 A1 2/2011 Oggier et al.
2011/0032398 A1 2/2011 Lenchenkov
2011/0037849 A1 2/2011 Niclass
2011/0116262 A1 5/2011 Marson
2011/0216304 A1 9/2011 Hall
2011/0266022 A1 11/2011 Jafari
2012/0044476 A1 2/2012 Earhart et al.
2012/0140109 A1 6/2012 Shpunt et al.
2012/0154914 A1 6/2012 MoriQuchi et al.
2012/0170029 A1 7/2012 Azzazy et al.
2012/0182464 A1 7/2012 Shpunt et al.
2012/0287417 A1 11/2012 Mimeault
2012/0320164 A1 12/2012 Lipton
2013/0044310 A1 2/2013 Mimeault
2013/0141549 A1 6/2013 Beers et al.
2013/0206967 A1 8/2013 Shpunt et al.
2013/0294089 A1 11/2013 Freedman et al.
2013/0300840 A1 11/2013 Borowski
2013/0325241 A1 12/2013 Lombrozo et al.
2014/0111812 A1 4/2014 Baeg et al.
2014/0118335 A1 5/2014 Gurman
2014/0118493 A1 5/2014 Sali et al.
2014/0153001 A1 6/2014 Chayat et al.
2014/0158900 A1 6/2014 Yoon
2014/0168631 A1 6/2014 Haslim et al.
2014/0176933 A1 6/2014 Haslim et al.
2014/0211194 A1 7/2014 Pacala et al.
2014/0224792 A1 8/2014 Beneke
2014/0269796 A1 9/2014 Geske
2014/0285628 A1 9/2014 Shpunt et al.
2014/0291491 A1 10/2014 Shpunt et al.
2014/0293263 A1* 10/2014 Justice G01S 17/42 356/4.01
2014/0313519 A1 10/2014 Shpunt et al.
2014/0320843 A1* 10/2014 Streuber F41G 7/2253 356/4.01
2014/0375977 A1 12/2014 Ludwig et al.
2014/0376092 A1 12/2014 Mor
2015/0002636 A1 1/2015 Brown et al.
2015/0055117 A1 2/2015 Pennecot et al.
2015/0131080 A1 5/2015 Retterath et al.
2015/0184999 A1 7/2015 Stettner
2015/0192677 A1 7/2015 Yu et al.
2015/0260830 A1 9/2015 Ghosh et al.
2015/0292948 A1 10/2015 Goldring et al.
2015/0293224 A1 10/2015 Eldada et al.
2015/0316473 A1 11/2015 Kester et al.
2015/0355470 A1 12/2015 Herschbach
2015/0358601 A1 12/2015 Oggier
2015/0378241 A1 12/2015 Eldada
2015/0379371 A1 12/2015 Yoon et al.
2016/0003946 A1 1/2016 Gilliland et al.
2016/0047895 A1 2/2016 Dussan
2016/0047896 A1 2/2016 Dussan
2016/0047897 A1 2/2016 Dussan
2016/0047898 A1 2/2016 Dussan
2016/0047899 A1 2/2016 Dussan
2016/0047900 A1 2/2016 Dussan
2016/0047901 A1 2/2016 Pacala et al.
2016/0047903 A1 2/2016 Dussan
2016/0049765 A1 2/2016 Eldada
2016/0097858 A1 4/2016 Mundhenk et al.
2016/0150963 A1 6/2016 Roukes et al.
2016/0161600 A1 6/2016 Eldada et al.
2016/0218727 A1 7/2016 Maki
2016/0254312 A1* 9/2016 Lee G02B 27/30 382/125
2016/0265902 A1 9/2016 Nawasra et al.
2016/0274221 A1* 9/2016 Wu G01S 7/4817
2016/0282453 A1* 9/2016 Pennecot G01S 17/42
2016/0282468 A1* 9/2016 Gruver H05K 999/99
2016/0291134 A1 10/2016 Droz et al.
2016/0291143 A1 10/2016 Droz et al.
2016/0306032 A1 10/2016 Schwarz et al.
2016/0327779 A1 11/2016 Hillman
2016/0328619 A1 11/2016 Yi et al.
2017/0078026 A1* 3/2017 Brilman H04B 10/524
2017/0146640 A1 5/2017 Hall et al.
2017/0219426 A1 8/2017 Pacala et al.
2017/0219695 A1 8/2017 Hall et al.
2017/0269197 A1 9/2017 Hall et al.
2017/0269198 A1 9/2017 Hall et al.
2017/0269209 A1 9/2017 Hall et al.
2017/0269215 A1* 9/2017 Hall G01S 7/4811
2017/0289524 A1 10/2017 Pacala et al.
2017/0350983 A1 12/2017 Hall et al.
2018/0003823 A1* 1/2018 Yan G01S 17/08
2018/0059222 A1 3/2018 Pacala
2018/0106900 A1 4/2018 Droz et al.
2018/0109061 A1 4/2018 Pardhan et al.
2018/0118041 A1 5/2018 Lenius et al.
2018/0123412 A1* 5/2018 Karplus H02K 1/2793
2018/0136321 A1 5/2018 Verghese et al.
2018/0152691 A1 5/2018 Pacala
2018/0180720 A1 6/2018 Pei et al.
2018/0191967 A1 7/2018 Kester
2018/0209841 A1 7/2018 Pacala
2018/0217236 A1 8/2018 Pacala
2018/0267148 A1* 9/2018 Buettner G01S 7/4814
2018/0284228 A1* 10/2018 LaChapelle G01S 7/4817
2018/0286909 A1 10/2018 Eichenholz et al.
2018/0299554 A1 10/2018 van Dyck
2018/0359460 A1 12/2018 Pacala et al.
2019/0041498 A1 2/2019 Droz et al.
2020/0036959 A1 1/2020 Pacala et al.
2020/0060550 A1* 2/2020 Pesach G06T 7/0012

FOREIGN PATENT DOCUMENTS

CN 102640037 8/2012
DE 102015217908 3/2017
EP 1193539 4/2002
EP 2110699 10/2009
EP 2124069 A1 11/2009
EP 3045935 A1 7/2016
EP 3002548 9/2016
EP 3002548 A1 9/2016
EP 3316000 A1 5/2018
JP H3-6407 1/1991
JP 07-049417 A 2/2007
KR 20130111130 10/2013
WO 2015025497 2/2015
WO 2015052616 A1 4/2015
WO 2016116733 A1 7/2016
WO 2016125165 A1 8/2016
WO 2017132704 A1 8/2017
WO 2018065426 A1 4/2018
WO 2018065427 A1 4/2018
WO 2018065428 A3 4/2018
WO 2018065429 A1 4/2018
WO 2018122415 A1 7/2018
WO 2018197441 A1 11/2018

OTHER PUBLICATIONS

PCTUS2017039306 "International Search Report and Written Opinion" dated Nov. 7, 2017 21 pages.
PCTUS2017039306 "Invitation to Pay Add'l Fees and Partial Search Report" dated Aug. 31, 2017 2 pages.
PCTUS2017/048379 "International Search Report and Written Opinion" dated Nov. 2, 2017, 15 pages.
Velodyne Lidar, Inc., HDL-32E Data Sheet 2010, 2017.
Velodyne Lidar, Inc., HDL-32E, User's Manual 2010.; Aug. 2016.

(56) **References Cited**

OTHER PUBLICATIONS

Velodyne Lidar, Inc., HDL-32E, HDL-32E, webpage: http://www.velodynelidar.com/hdl-32e.html; retrieved Dec. 6, 2017.
Velodyne Lidar, Inc., HDL-64E Data Sheet, 2017.
Velodyne Lidar, Inc., HDL-64E S2 and S2.1; User's Manual and Programming Guide 2007; Firmware version 4; 2007, revision Nov. 2012.
Velodyne Lidar, Inc., HDL-64E, S3; User's Manual and Programming Guide revision J; 2007.; Dec. 2017.
Velodyne Lidar, Inc., HDL-64E; webpage: http://www.velodynelidar.com/hdl-64e.html; retrieved Dec. 6, 2017.
Velodyne Lidar, Inc., VLP-16 data sheet, Puck, Real Time 3D Lidar Sensor, 2014.
Velodyne Lidar Inc., Velodyne Lidar Puck; User's Manual and Programming Guide; 2014.
Velodyne Lidar, Inc., VLP-16; retrieved via website: http://www.velodynelidar.com/vlp-16.html; Dec. 6, 2017.
Velodyne, Lidar, Inc.; Puck Hi-Res Data Sheet; Sep. 2016.
Velodyne Lidar, Inc.; Puck Hi-Res User Manual; Sep. 2016.
Velodyne Lidar, Inc.; Puck Hi-Res retrieved via website: http://www.velodynelidar.com/vlp-16-hi-res.html; Dec. 13, 2017.
Velodyne Lidar, Inc.; Puck Lite Data Sheet; Feb. 2016.
Velodyne Lidar, Inc.; Puck Lite User Manual; Feb. 2016.
Velodyne Lidar, Inc.; Puck Lite, Our Lightest Sensor Ever, Apr. 2016; retrieved via website: http://www.velodynelidar.com/vlp-16-lite.html; Dec. 13, 2017.
Velodyne Lidar, Inc.,; Ultra Puck VLP-32C; Nov. 2017; retrieved via website: http://www.velodynelidar.com/vlp-32c.html; Dec. 13, 2017.
Bronzi, Danilo, "100 000 Frames/s 64×32 Single Photon Detector Array for 2-D Imaging and 3-D Ranging", IEEE Journal of Selected Topic in Quantum Electronics, vol. 20, No. 6, Nov./Dec. 2014; 10 pages.
Quanergy Systems Ex, 1005, Review of Scientific Instruments; vol. 72, No. 4, Apr. 2001, 13 pages.
Itzler, Mark A., "Geiger-mode avalance photodiode focal plane arrays for three-dimensional imaging LADAR"; Princeton Llghtwave, Inc., Proc of SPIE vol. 7808 780890C-, 14 pages.
Cova, Sergio D.; Single-Photon Counting Detectors, IEEE Photonics Journal; vol. 3, No. 2, Apr. 2011, 5 pages.
Guerrieri, Fabrizio, Two-Dimensional SPAD Imaging Camera for Photon Counting, vol. 2, No. 5, Oct. 2010, 17 pages.
Charbon, Edoardo, et al. "SPAD-Based Sensors"; TOF Range-Imaging Cameras, Remondino, F.,; Stoppa D. (Eds.), 2013, V. 240 p. 138 Illus., 85 Illus. In color., Hardcover ISBN 978-3-642-27522-7, 2013.
U.S. Appl. No. 15/979,253 , "Corrected Notice of Allowability", dated Dec. 1, 2020, 2 pages.
U.S. Appl. No. 15/979,253 , "Corrected Notice of Allowability", dated Dec. 22, 2020, 2 pages.
U.S. Appl. No. 15/979,253 , "Corrected Notice of Allowability", dated Jan. 15, 2021, 2 pages.
U.S. Appl. No. 15/979,253 , "Corrected Notice of Allowability", dated Jan. 8, 2021, 2 pages.
U.S. Appl. No. 15/979,277 , "Non-Final Office Action", dated Jan. 12, 2021, 8 pages.
AU2018269000 , "First Examination Report", dated Jun. 22, 2020, 5 pages.
SG11201910605R , "Written Opinion", dated May 16, 2020, 6 pages.
U.S. Appl. No. 16/245,909 , "Notice of Allowance", dated Jan. 14, 2020, 5 pages.
U.S. Appl. No. 15/979,235 , "Non-Final Office Action", dated Jul. 23, 2018, 5 pages.
U.S. Appl. No. 15/979,235 , "Notice of Allowance", dated Dec. 19, 2018, 5 pages.
U.S. Appl. No. 15/979,253 , "Final Office Action", dated Aug. 4, 2020, 9 pages.
U.S. Appl. No. 15/979,253 , "Non-Final Office Action", dated Mar. 20, 2020, 10 pages.
U.S. Appl. No. 15/979,295 , "Non-Final Office Action", dated Aug. 4, 2020, 15 pages.
U.S. Appl. No. 16/245,909 , "Non-Final Office Action", dated Sep. 18, 2019, 6 pages.
IN201947048756 , "First Examination Report", dated Dec. 2, 2020, 6 pages.
U.S. Appl. No. 15/979,253 , "Non-Final Office Action", dated Oct. 23, 2020, 12 pages.
U.S. Appl. No. 15/979,253 , "Notice of Allowance", dated Nov. 13, 2020, 7 pages.
CN202010078057.9 , "Office Action", dated Nov. 9, 2020, 9 pages.
EP18802192.7 , "Extended European Search Report", dated Nov. 12, 2020, 11 pages.
PCT/US2018/032601 , "International Preliminary Report on Patentability", dated Nov. 28, 2019, 13 pages.
PCT/US2018/032601 , "International Search Report and Written Opinion", dated Sep. 21, 2018, 16 pages.
PCT/US2018/032601 , "Invitation to Pay Additional Fees and, Where Applicable, Protest Fee", dated Jul. 26, 2018, 2 pages.
U.S. Appl. No. 15/979,253 , "Non-Final Office Action", dated Feb. 19, 2021, 7 pages.
U.S. Appl. No. 15/979,295 , "Notice of Allowance", dated Jan. 27, 2021, 5 pages.
U.S. Appl. No. 15/979,277 , Final Office Action, dated Mar. 30, 2021, 7 pages.
U.S. Appl. No. 17/317,809 , filed May 11, 2021, 81 pages.
U.S. Appl. No. 17/323,962 , filed May 18, 2021, 78 pages.
U.S. Appl. No. 17/194,068 , filed May Mar. 5, 2021, 69 pages.
U.S. Appl. No. 17/323,983 , filed May May 18, 2021, 80 pages.
U.S. Appl. No. 17/323,987 , filed May May 18, 2021, 81 pages.
U.S. Appl. No. 15/979,253 , Notice of Allowance, dated Jul. 22, 2021, 7 pages.
U.S. Appl. No. 15/979,277 , Notice of Allowance, dated May 24, 2021, 7 pages.

* cited by examiner

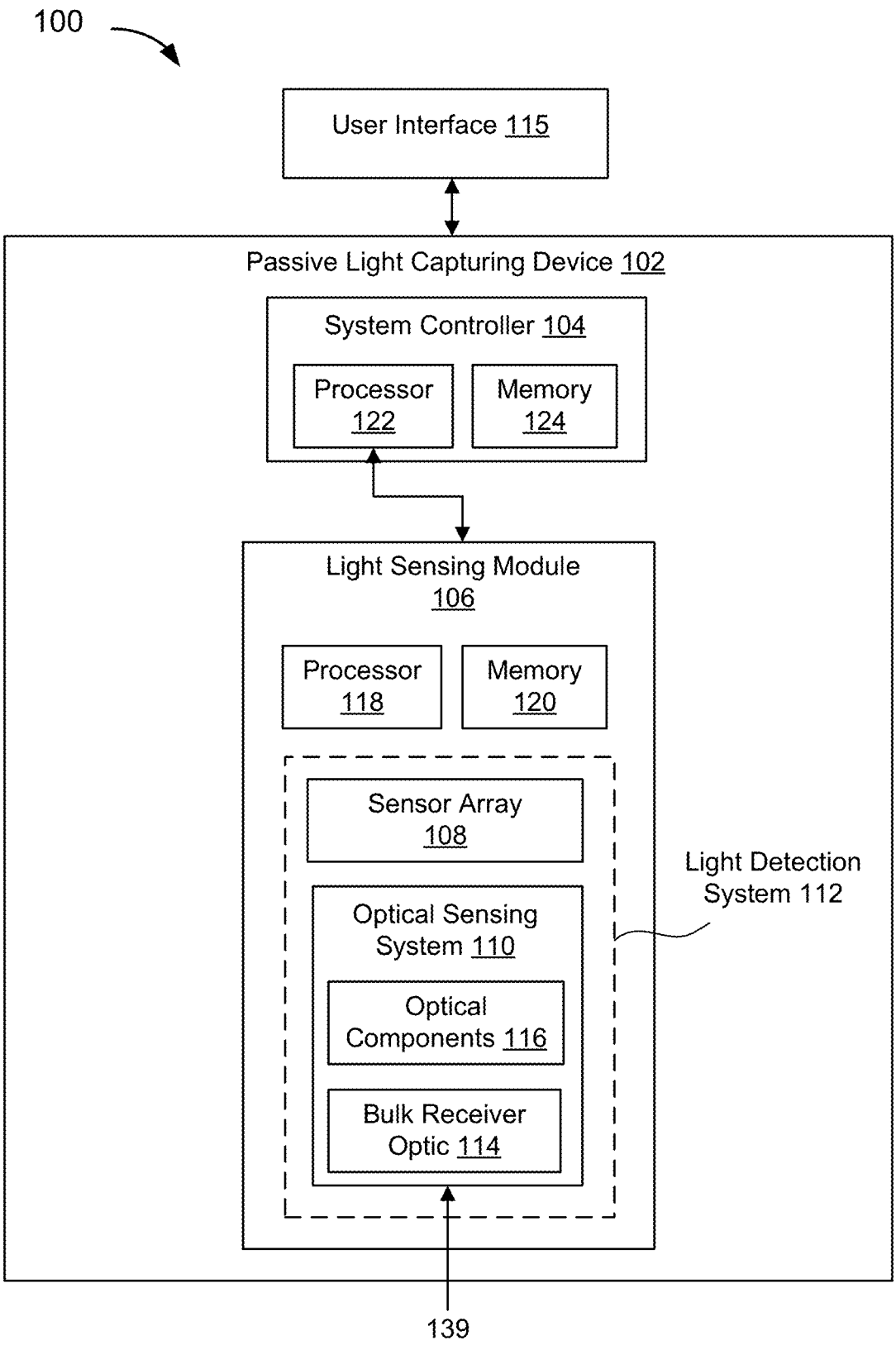
100
User Interface 115
Passive Light Capturing Device 102
System Controller 104
Processor 122
Memory 124
Light Sensing Module 106
Processor 118
Memory 120
Sensor Array 108
Optical Sensing System 110
Optical Components 116
Bulk Receiver Optic 114
Light Detection System 112
139

FIG. 1

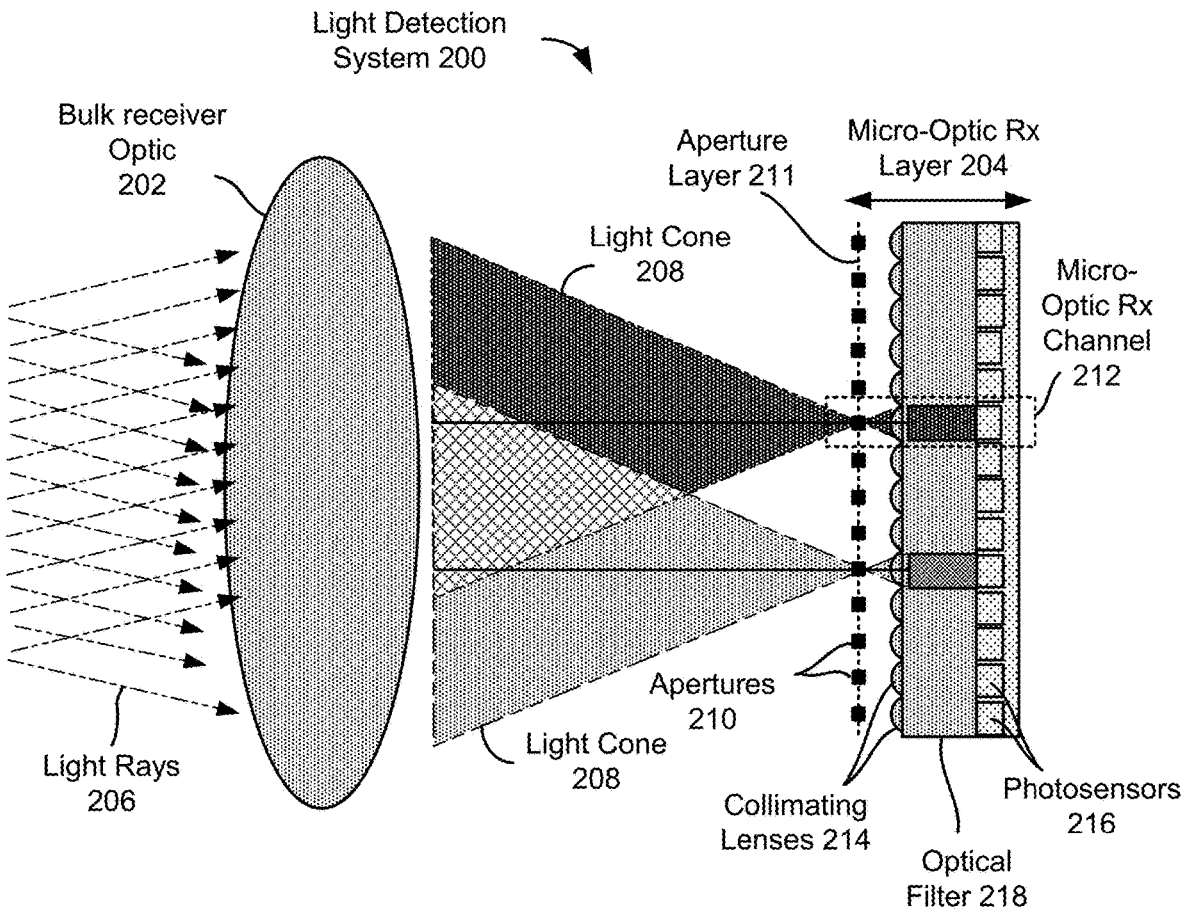
Light Detection System 200
Bulk receiver Optic 202
Aperture Layer 211
Micro-Optic Rx Layer 204
Light Cone 208
Micro-Optic Rx Channel 212
Apertures 210
Light Cone 208
Light Rays 206
Collimating Lenses 214
Photosensors 216
Optical Filter 218

FIG. 2

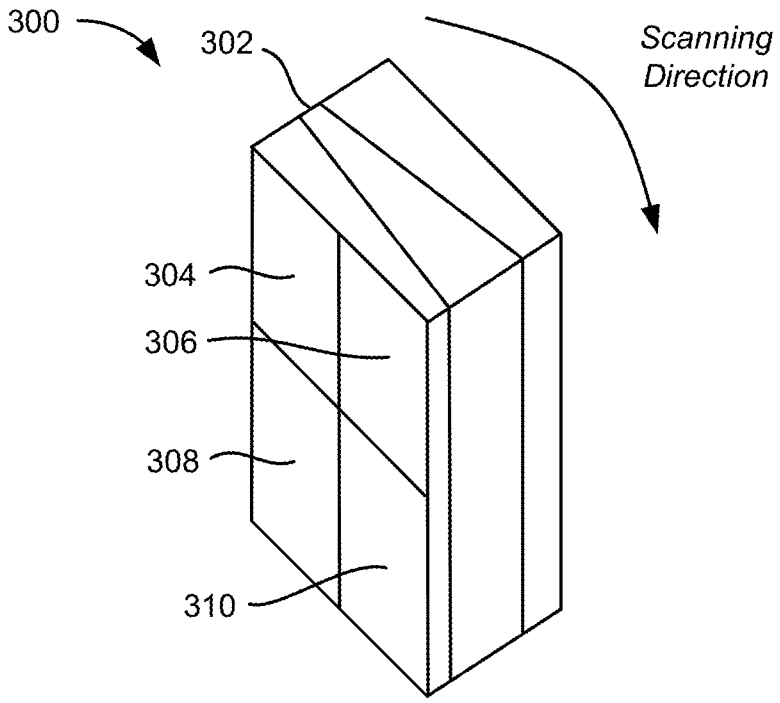
300
302
Scanning Direction
304
306
308
310

FIG. 3A

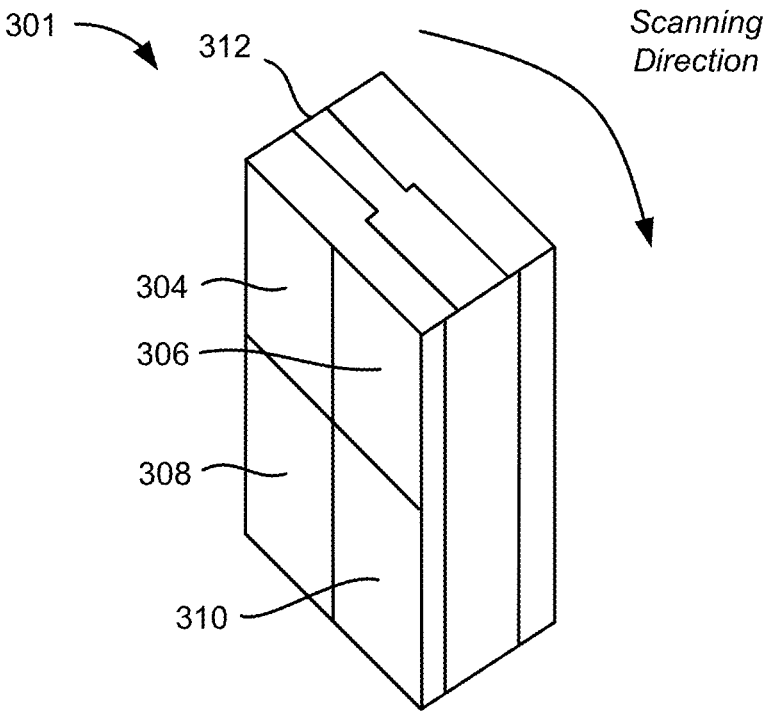
301
312
Scanning Direction
304
306
308
310

FIG. 3B

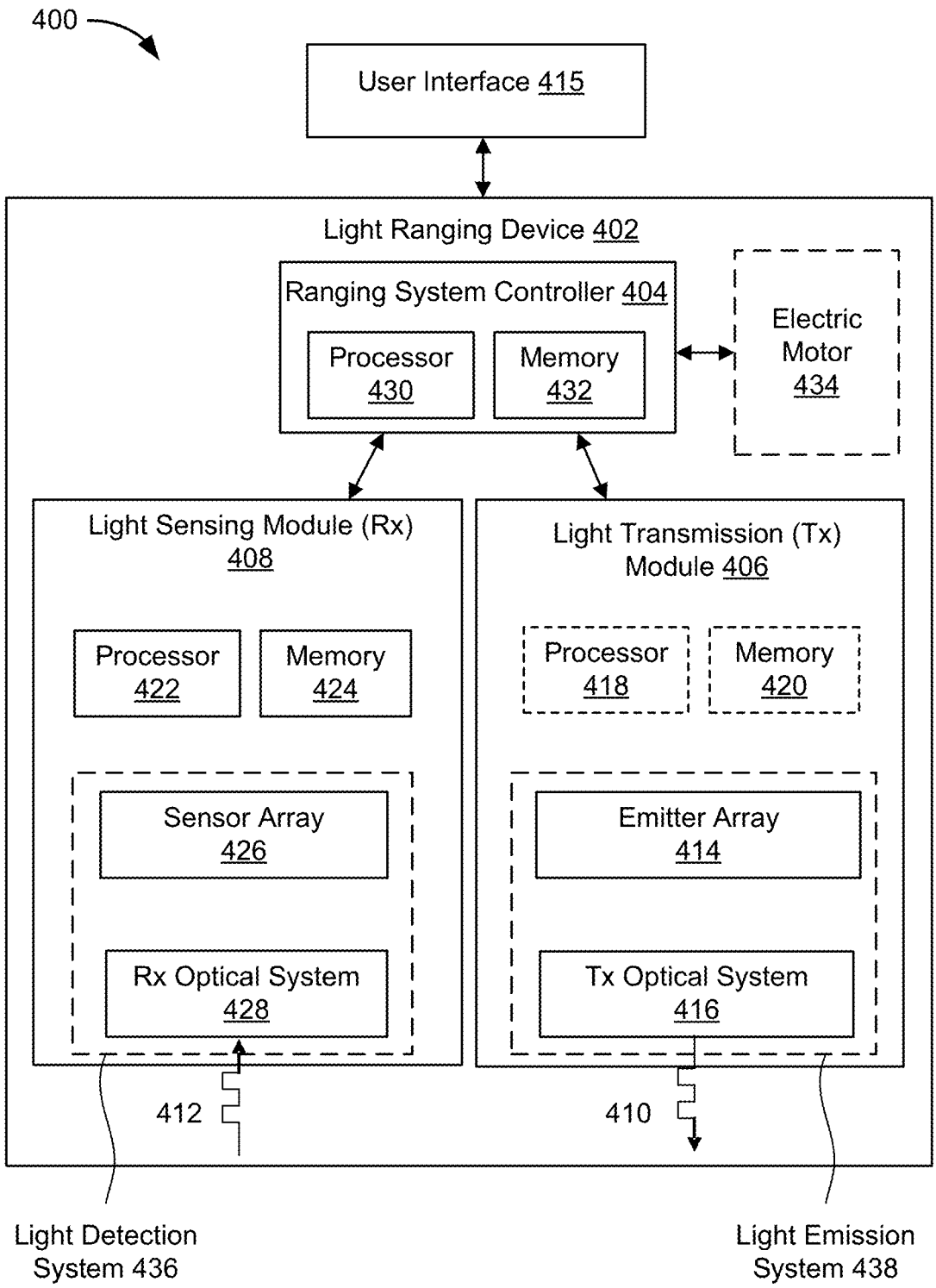
400
User Interface 415
Light Ranging Device 402
Ranging System Controller 404
Processor 430
Memory 432
Electric Motor 434
Light Sensing Module (Rx) 408
Processor 422
Memory 424
Sensor Array 426
Rx Optical System 428
Light Transmission (Tx) Module 406
Processor 418
Memory 420
Emitter Array 414
Tx Optical System 416
412
410
Light Detection System 436
Light Emission System 438

FIG. 4

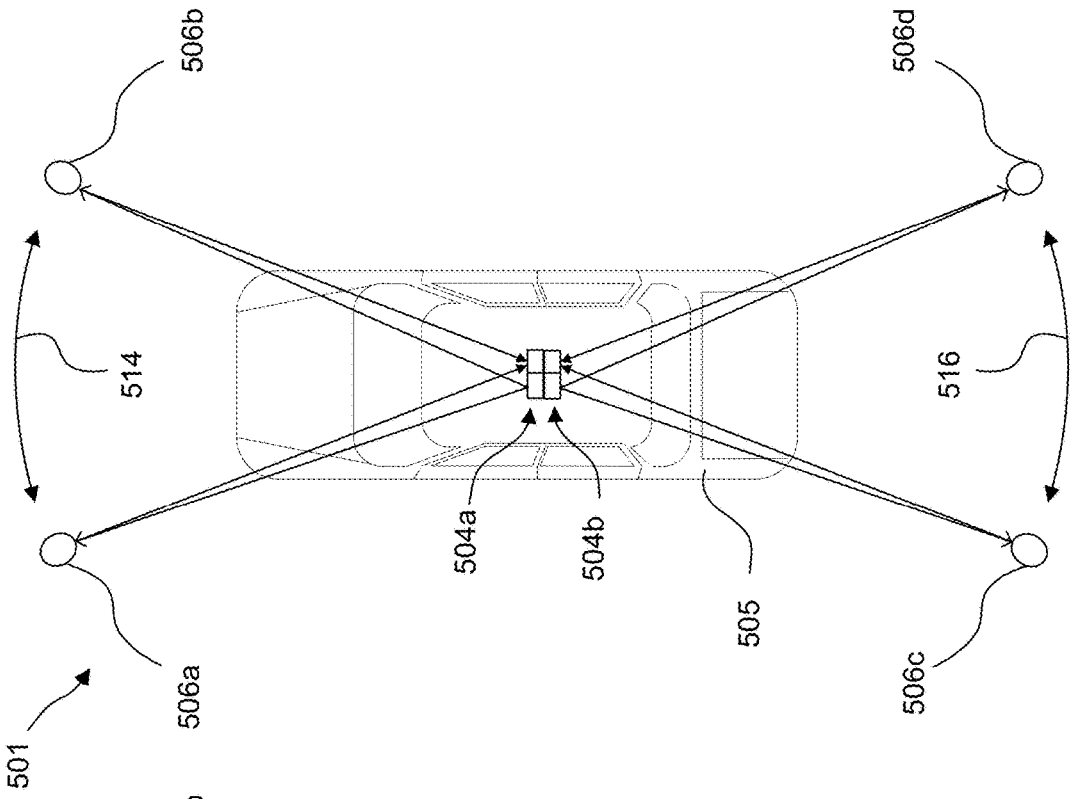
501
506a
506b
514
504a
504b
505
506c
506d
516

FIG. 5B

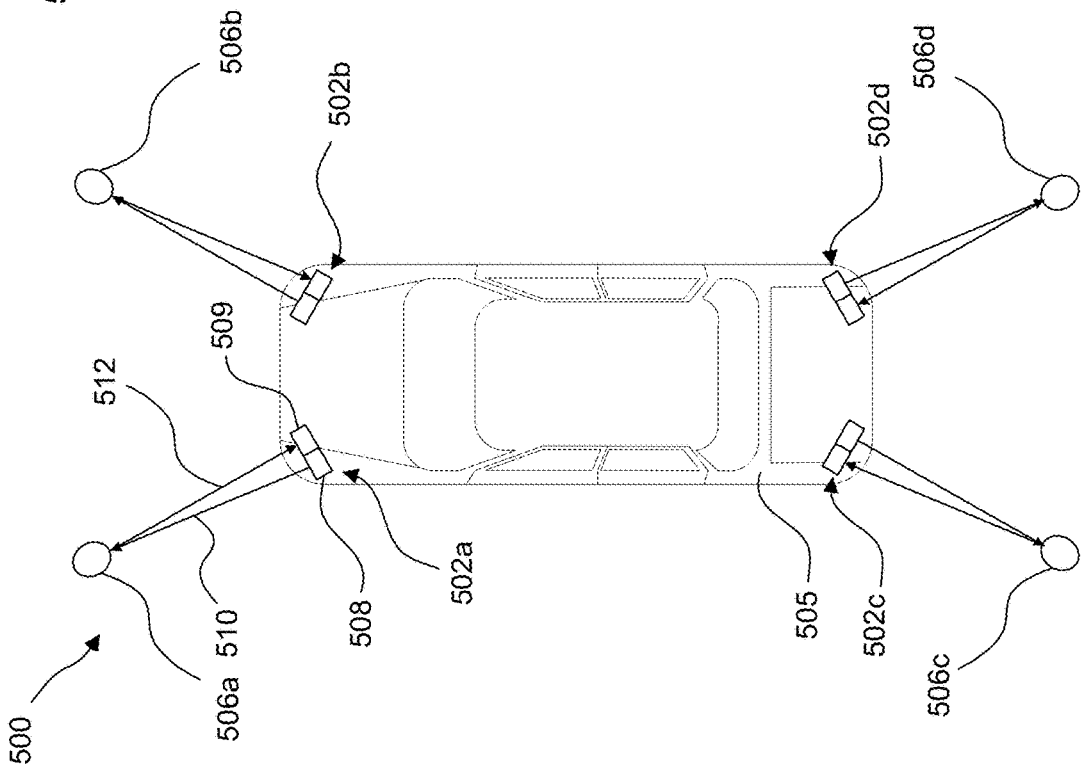
500
506a
510
512
509
508
502a
502b
506b
505
502c
502d
506c
506d

FIG. 5A

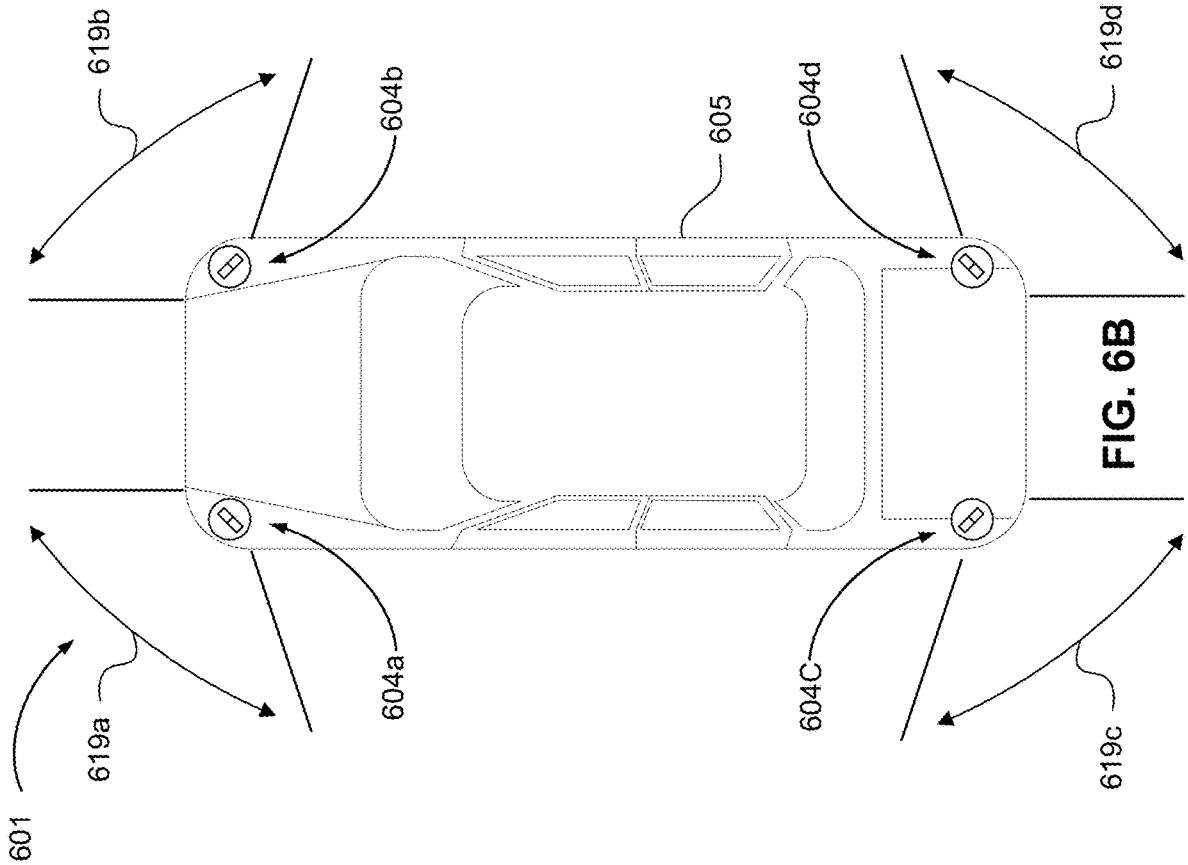
601
619a
619b
604a
604b
605
604C
604d
619c
619d

FIG. 6B

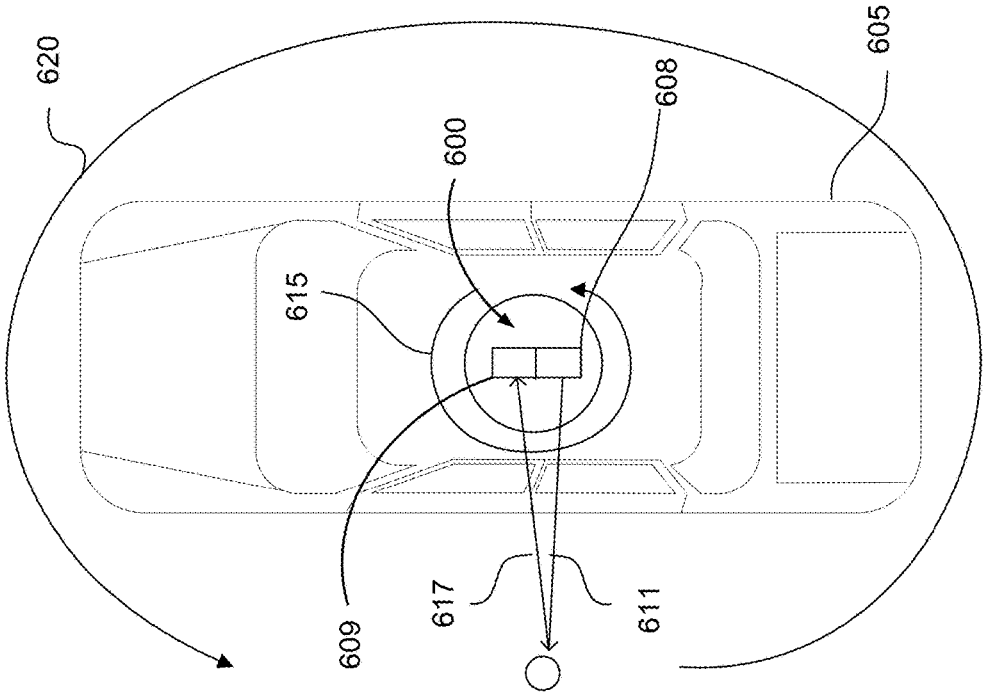
620
605
608
600
615
609
617
611

FIG. 6A

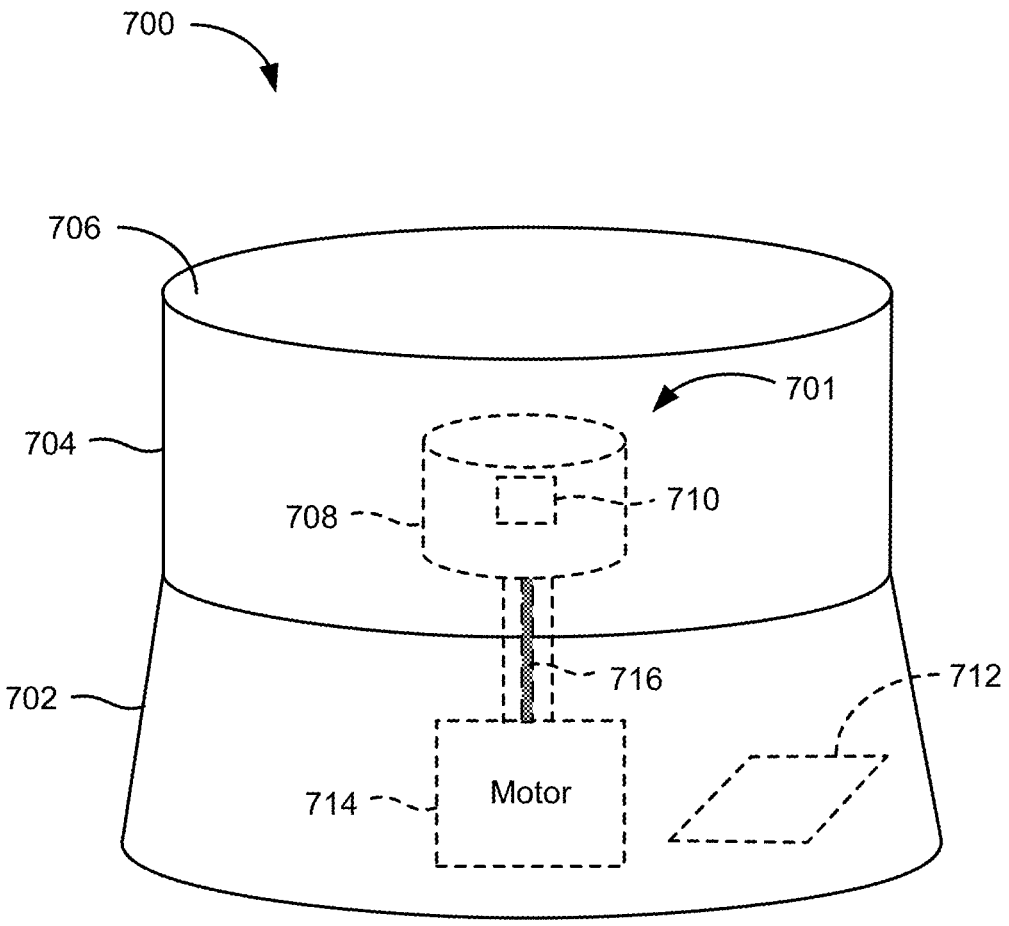

FIG. 7

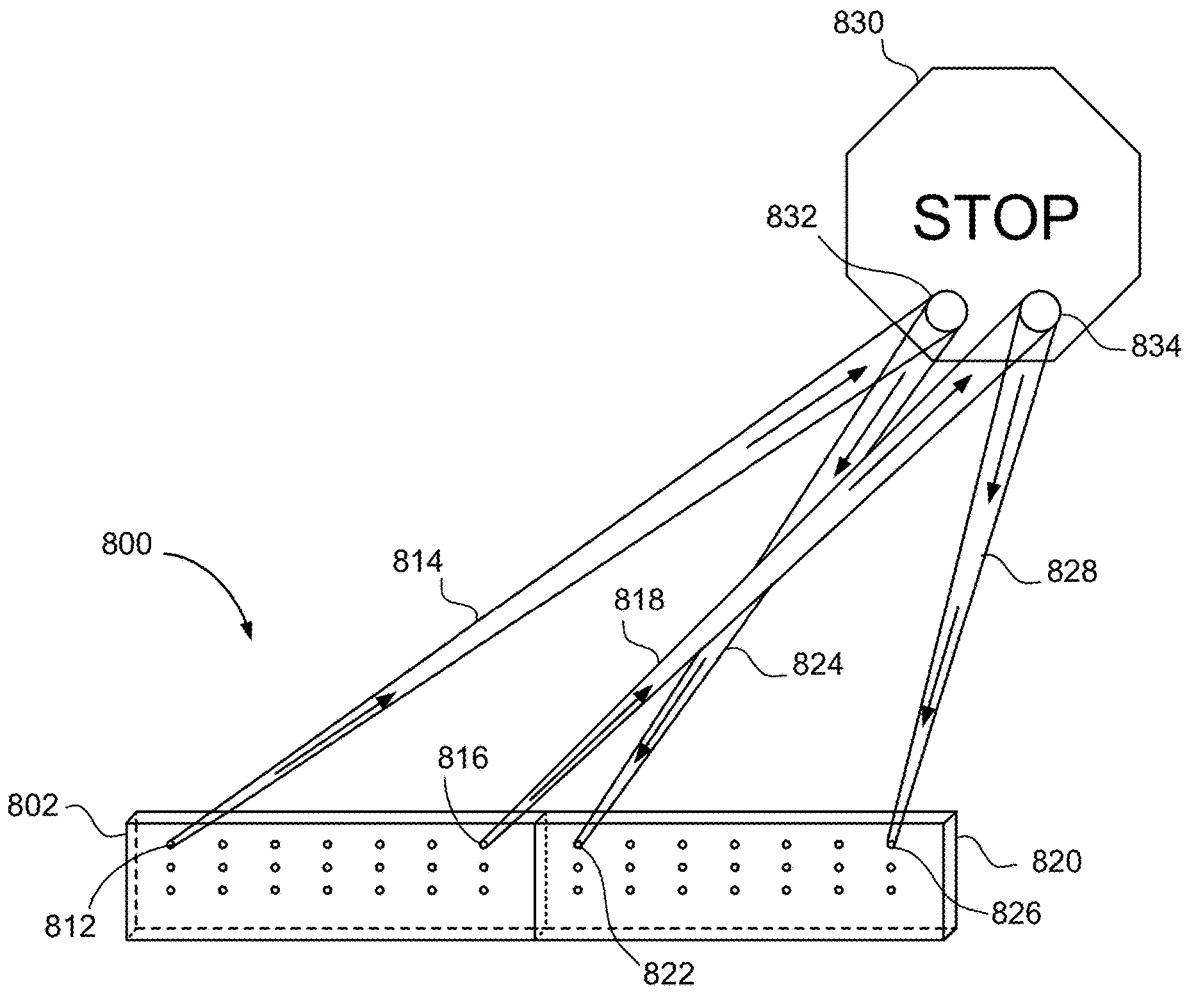

FIG. 8

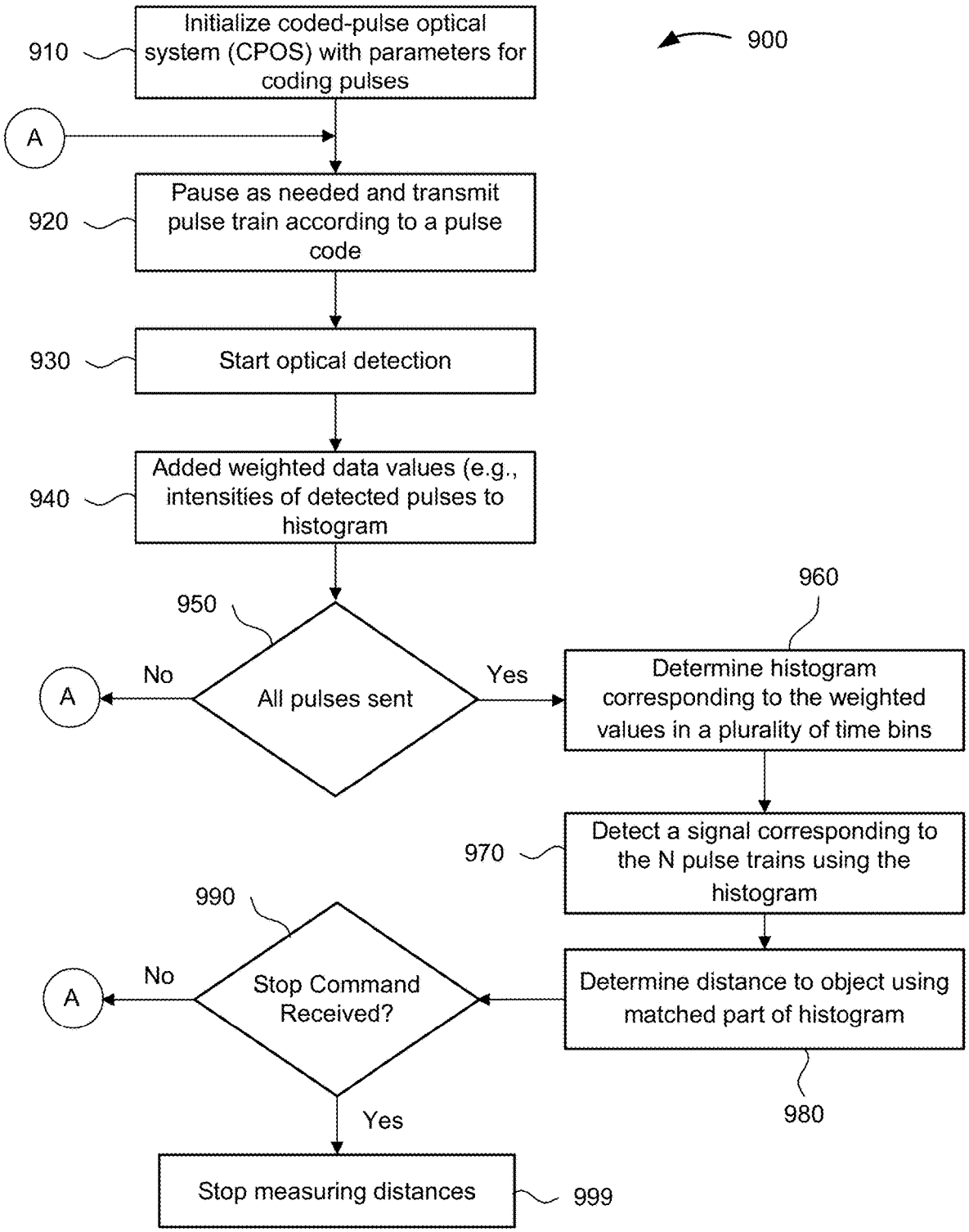
900
910
Initialize coded-pulse optical system (CPOS) with parameters for coding pulses
A
920
Pause as needed and transmit pulse train according to a pulse code
930
Start optical detection
940
Added weighted data values (e.g., intensities of detected pulses to histogram
950
All pulses sent
No
A
Yes
960
Determine histogram corresponding to the weighted values in a plurality of time bins
970
Detect a signal corresponding to the N pulse trains using the histogram
980
Determine distance to object using matched part of histogram
990
Stop Command Received?
No
A
Yes
Stop measuring distances
999

FIG. 9

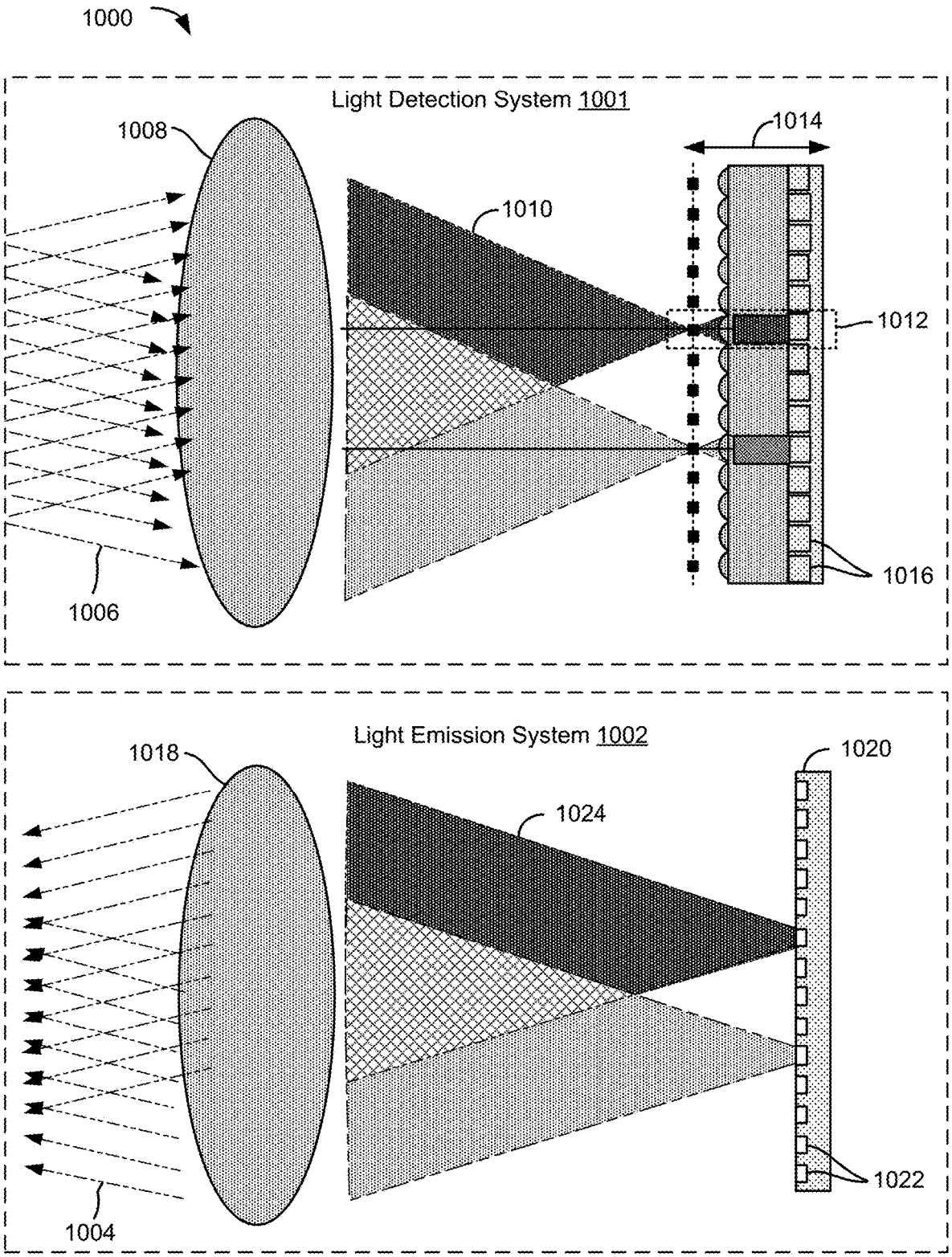
1000
Light Detection System 1001
1008
1014
1010
1012
1016
1006
Light Emission System 1002
1018
1020
1024
1022
1004

FIG. 10

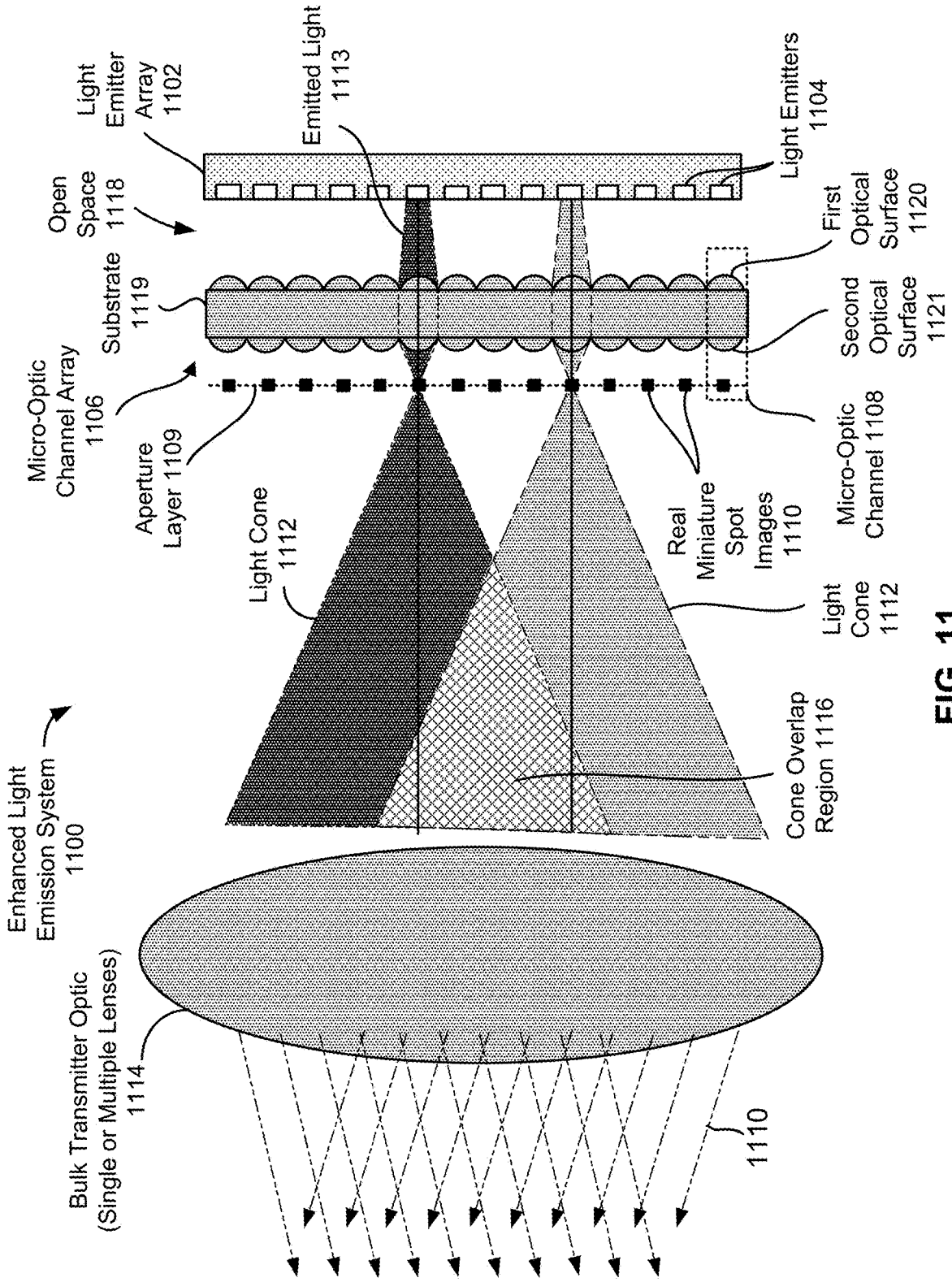
Enhanced Light Emission System 1100
Bulk Transmitter Optic (Single or Multiple Lenses) 1114
Open Space 1118
Light Emitter Array 1102
Emitted Light 1113
Light Emitters 1104
Micro-Optic Channel Array 1106
Substrate 1119
Aperture Layer 1109
Light Cone 1112
Real Miniature Spot Images 1110
Light Cone 1112
Cone Overlap Region 1116
First Optical Surface 1120
Second Optical Surface 1121
Micro-Optic Channel 1108
1110

FIG. 11

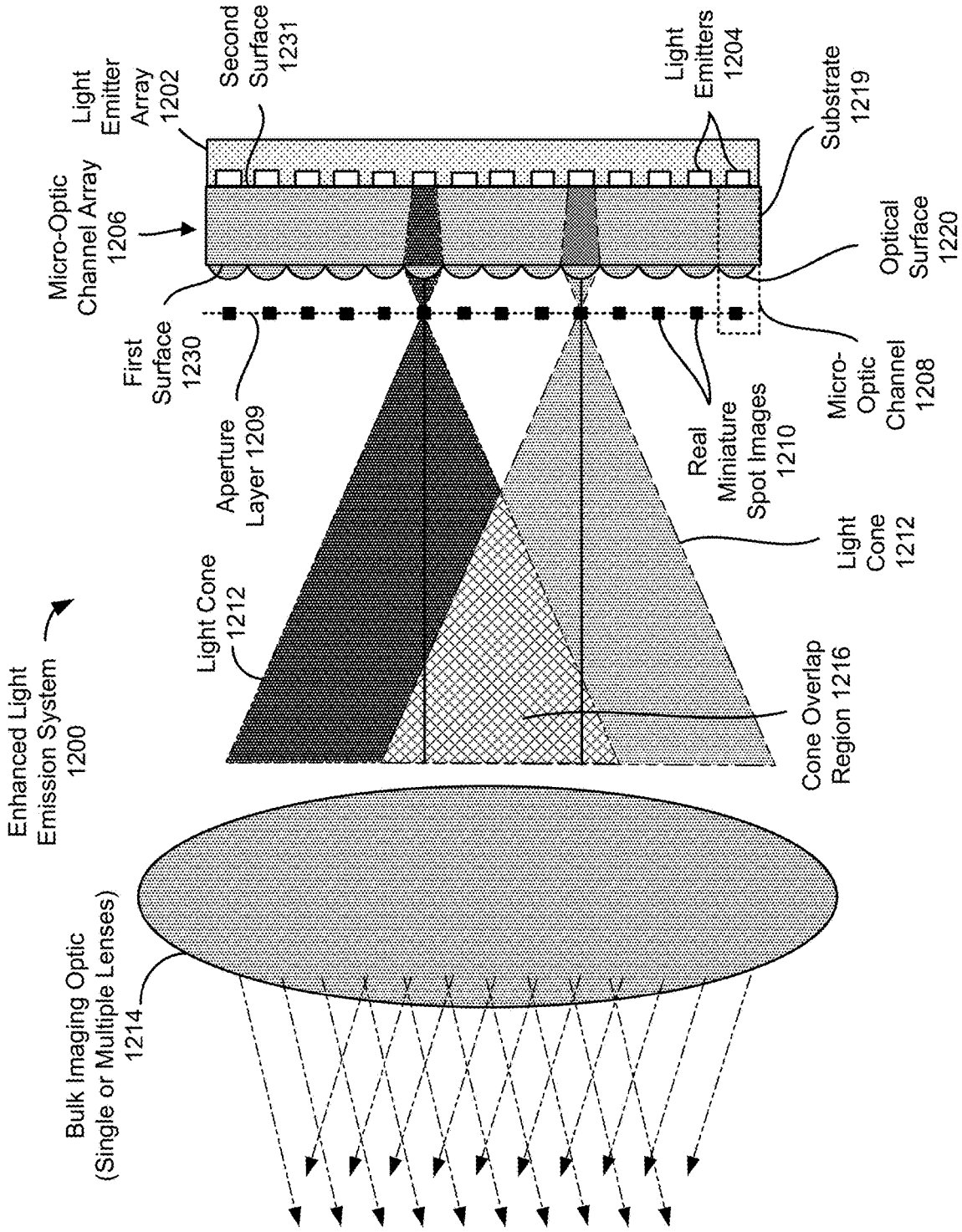
Enhanced Light Emission System 1200
Bulk Imaging Optic (Single or Multiple Lenses) 1214
Light Cone 1212
Micro-Optic Channel Array 1206
Light Emitter Array 1202
Second Surface 1231
First Surface 1230
Aperture Layer 1209
Light Emitters 1204
Substrate 1219
Optical Surface 1220
Micro-Optic Channel 1208
Real Miniature Spot Images 1210
Light Cone 1212
Cone Overlap Region 1216

FIG. 12

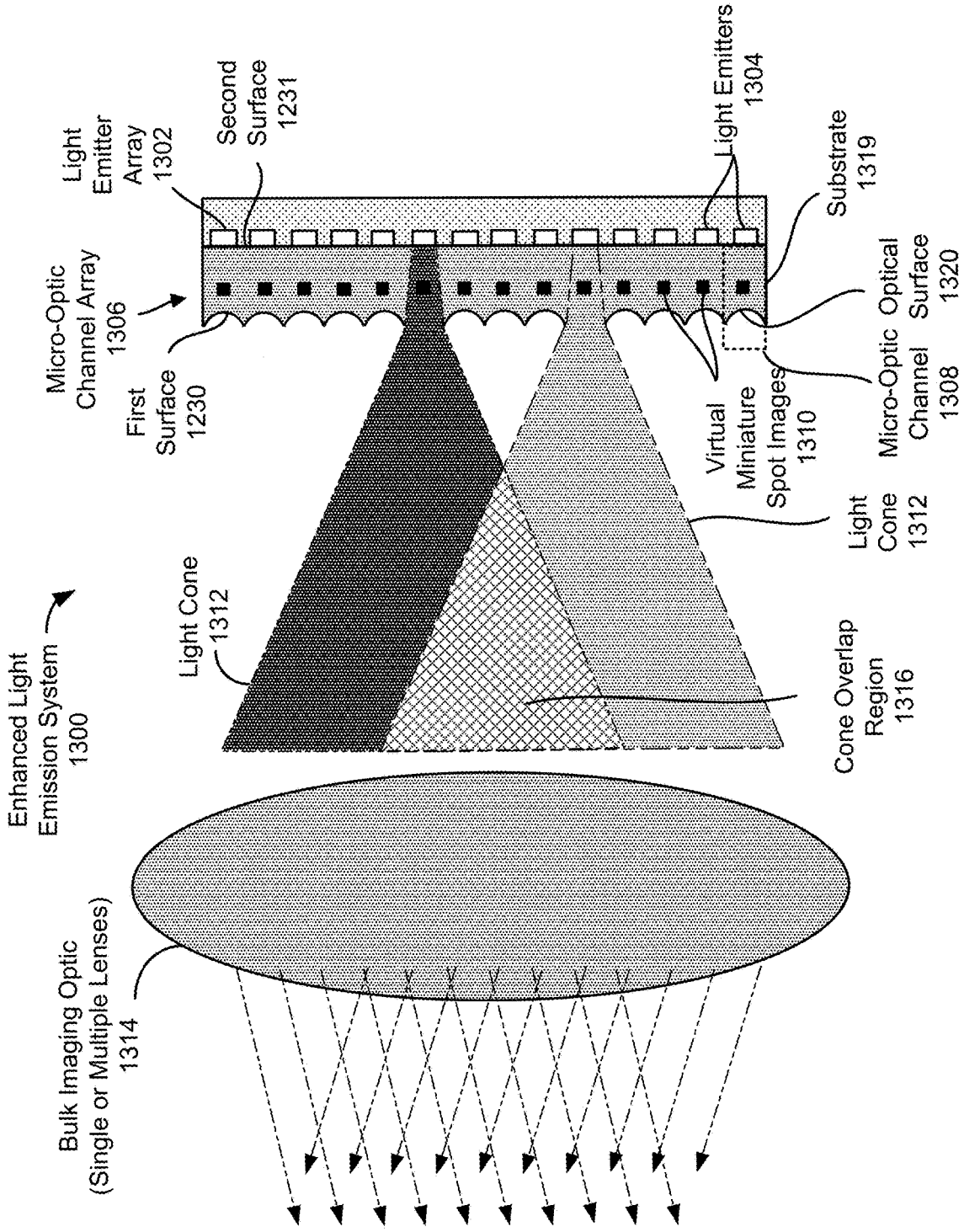
Enhanced Light Emission System 1300
Bulk Imaging Optic (Single or Multiple Lenses) 1314
Light Cone 1312
Micro-Optic Channel Array 1306
First Surface 1230
Light Emitter Array 1302
Second Surface 1231
Light Emitters 1304
Substrate 1319
Micro-Optic Optical Surface 1320
Micro-Optic Channel 1308
Virtual Miniature Spot Images 1310
Light Cone 1312
Cone Overlap Region 1316

FIG. 13

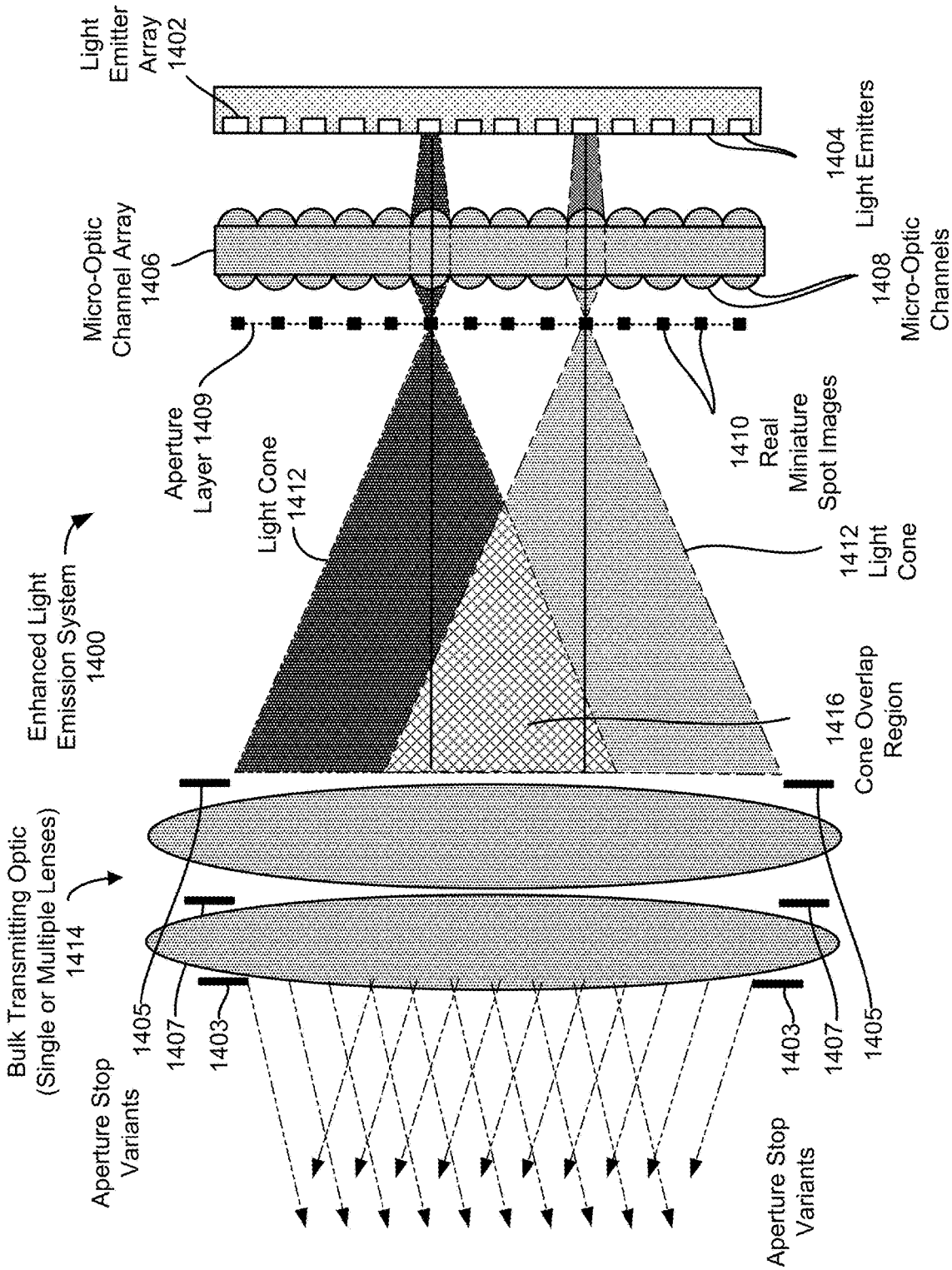
Light Emitter Array 1402
Micro-Optic Channel Array 1406
Aperture Layer 1409
Light Cone 1412
Enhanced Light Emission System 1400
Bulk Transmitting Optic (Single or Multiple Lenses) 1414
Aperture Stop Variants
1405
1407
1403
1404 Light Emitters
1408 Micro-Optic Channels
1410 Real Miniature Spot Images
1412 Light Cone
1416 Cone Overlap Region
1403
1407
1405
Aperture Stop Variants

FIG. 14

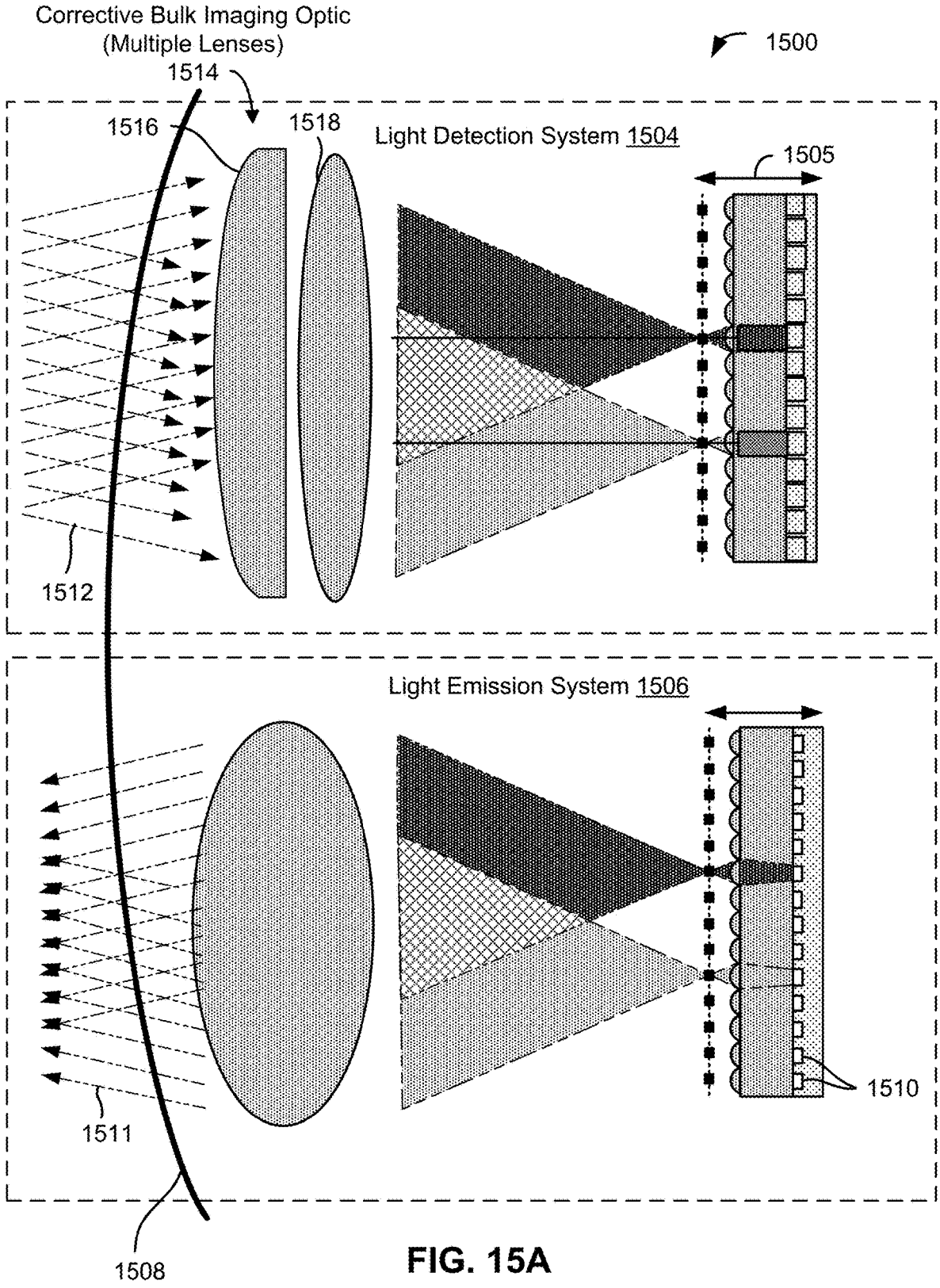
Corrective Bulk Imaging Optic
(Multiple Lenses)
1514
1500
1516
1518
Light Detection System 1504
1505
1512
Light Emission System 1506
1510
1511
1508

FIG. 15A

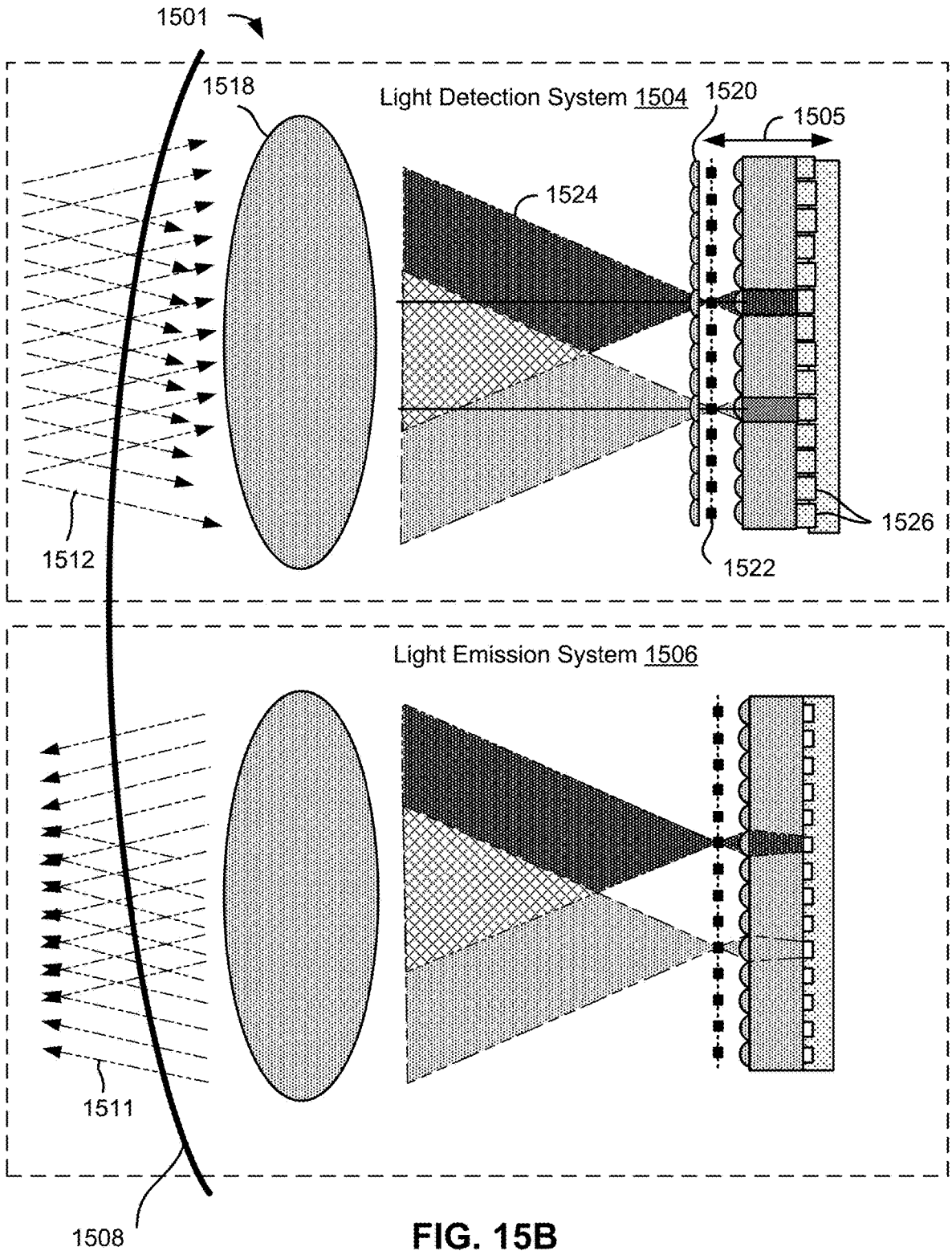
1501
1518
Light Detection System 1504
1520
1505
1524
1526
1512
1522
Light Emission System 1506
1511
1508

FIG. 15B

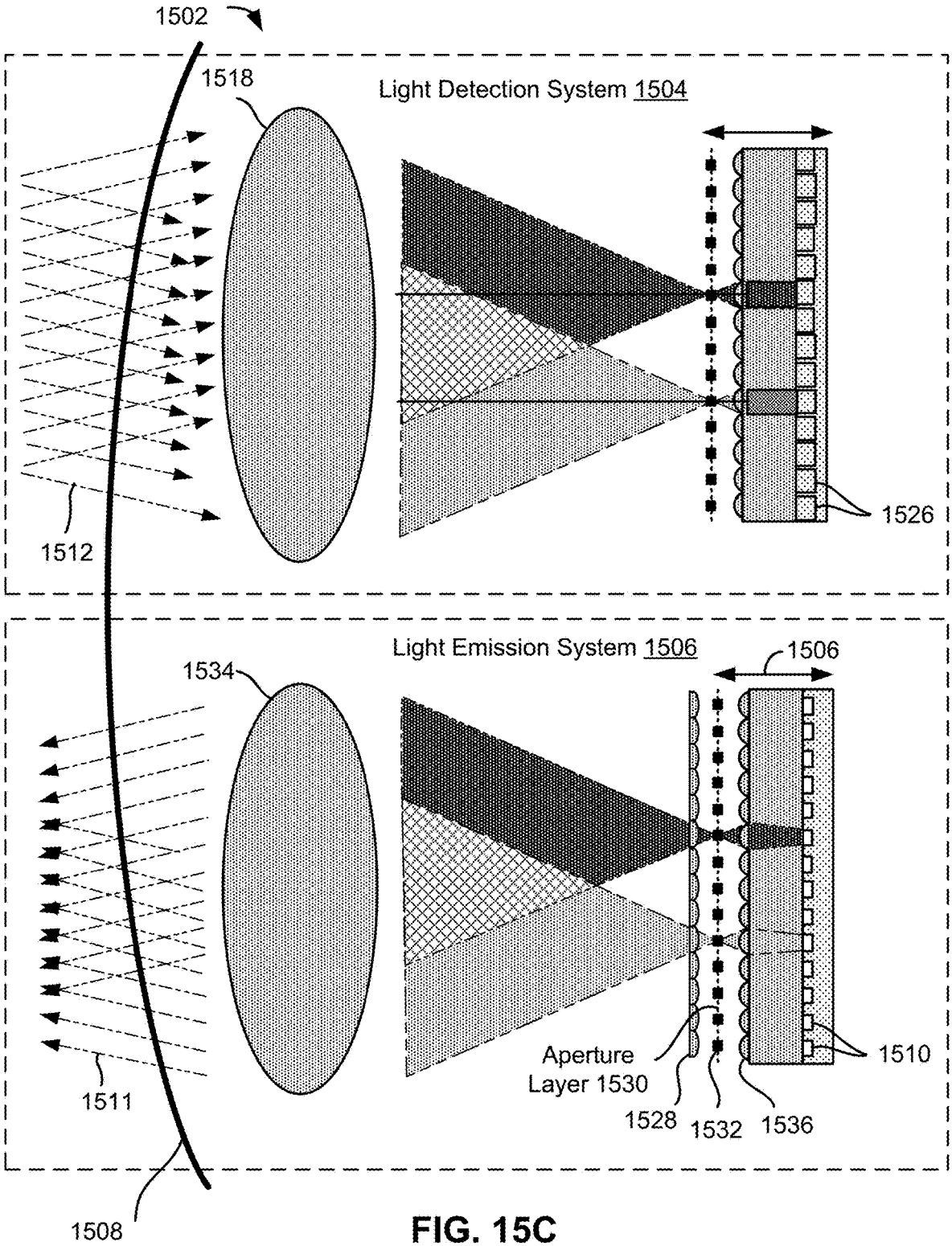
1502
1518
Light Detection System 1504
1526
1512
Light Emission System 1506
1506
1534
1510
Aperture
Layer 1530
1528
1532
1536
1511
1508

FIG. 15C

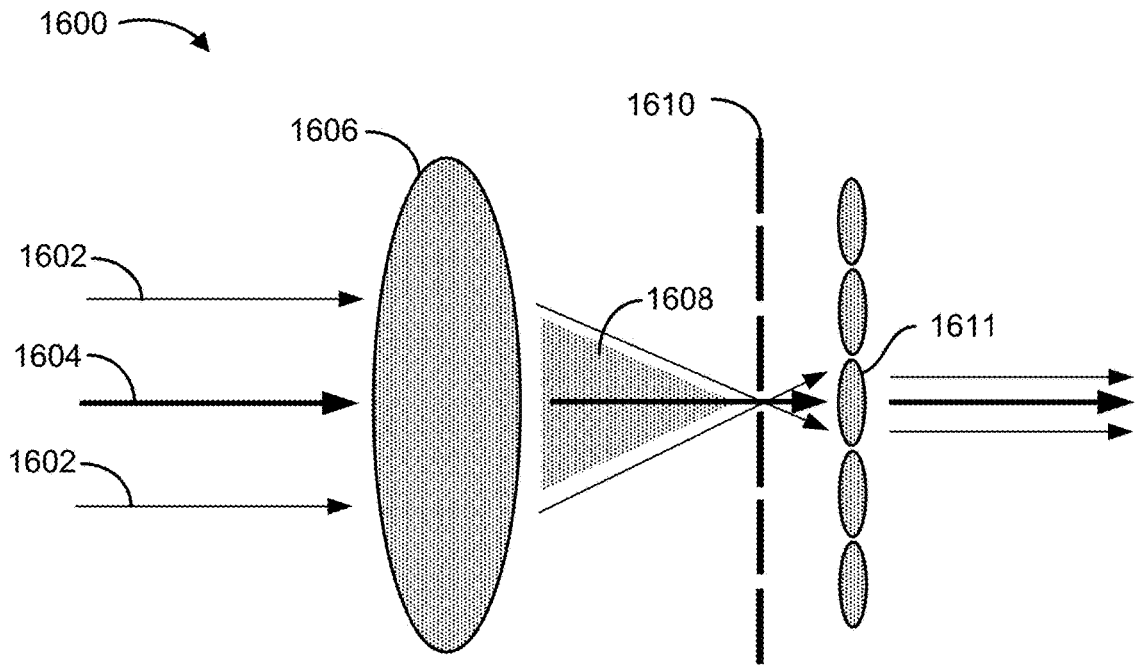

FIG. 16A

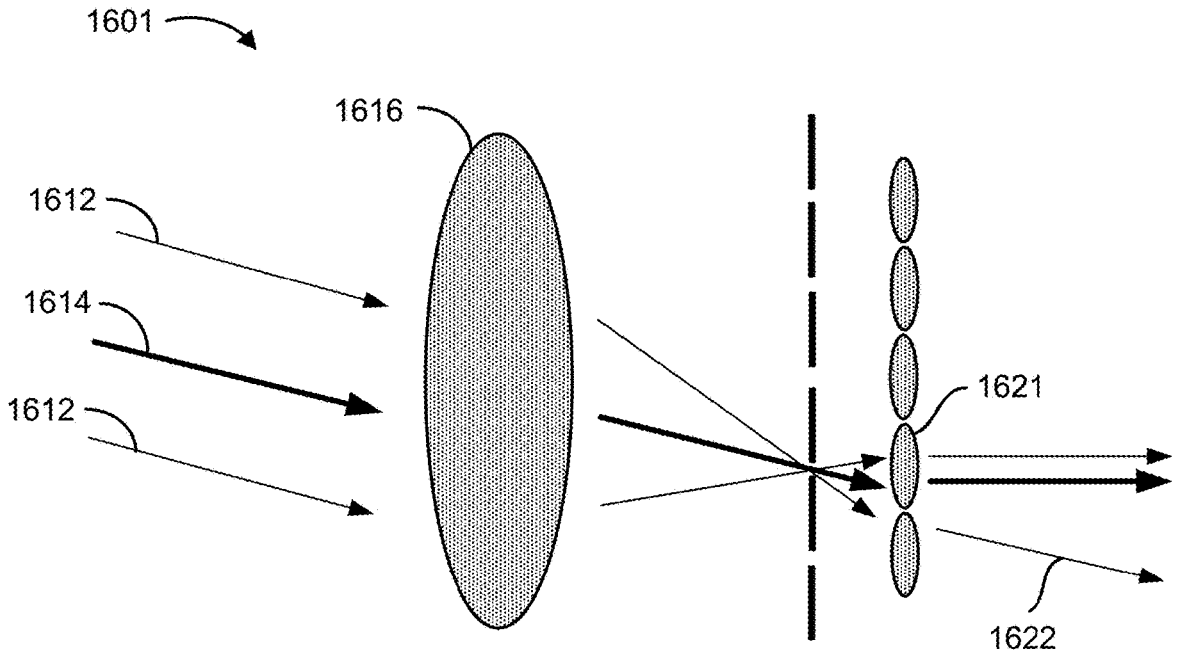

FIG. 16B

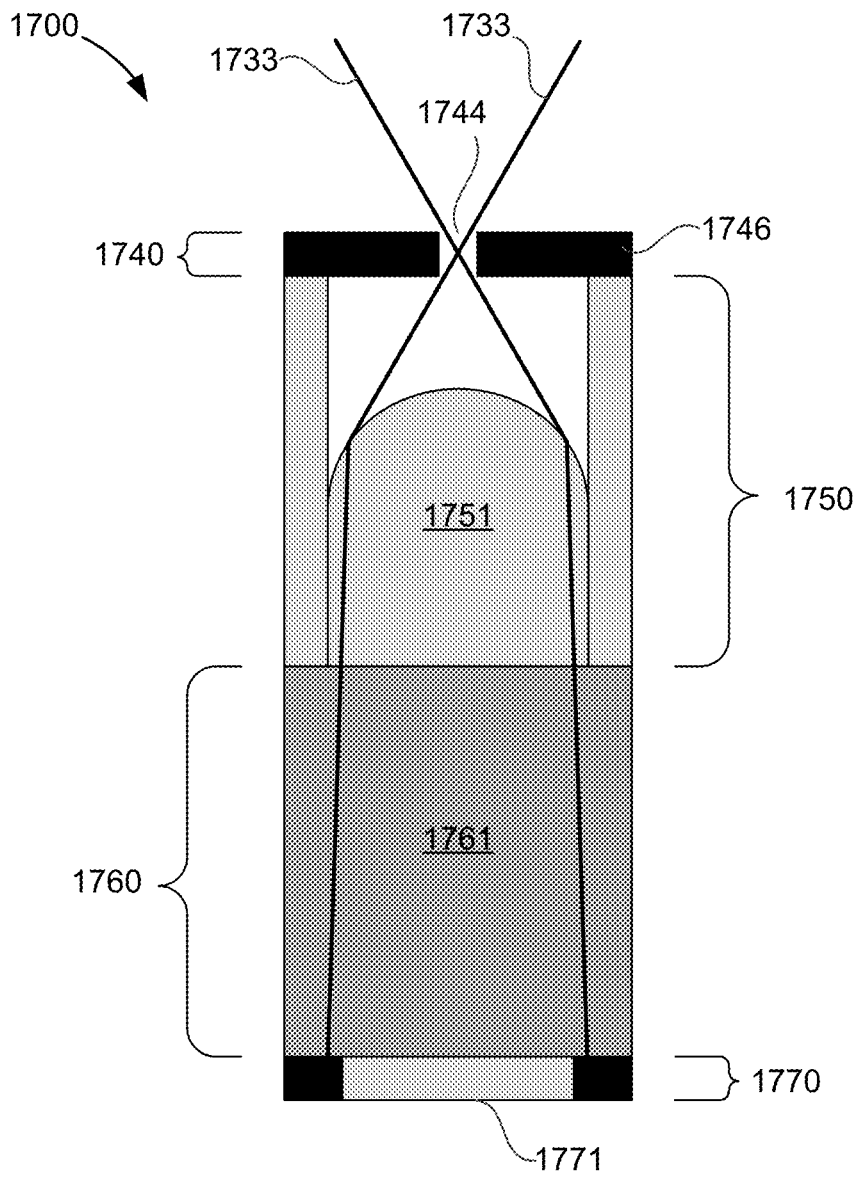

FIG. 17

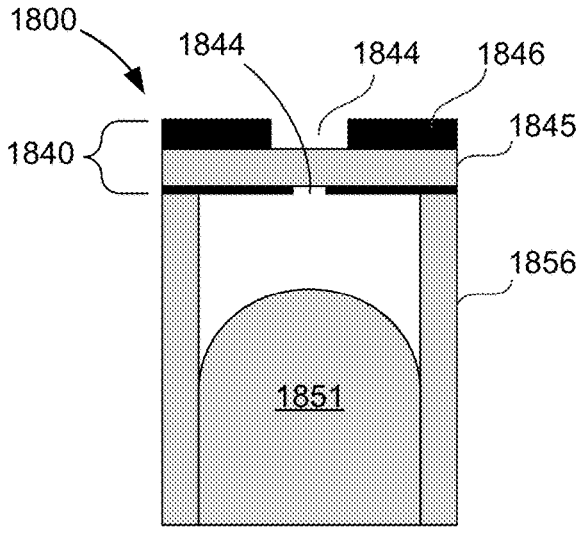

FIG. 18A

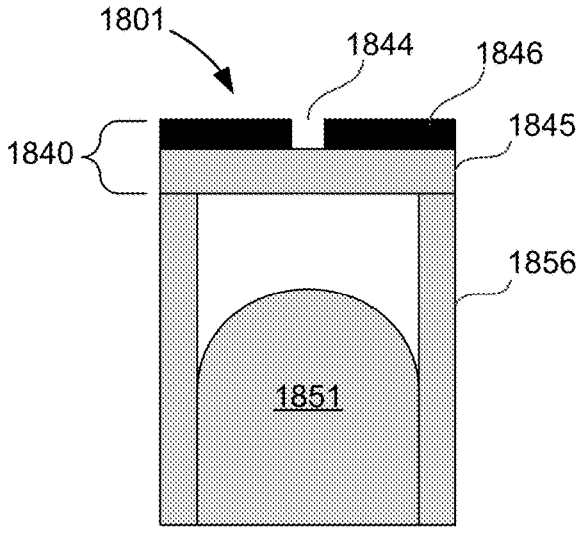

FIG. 18B

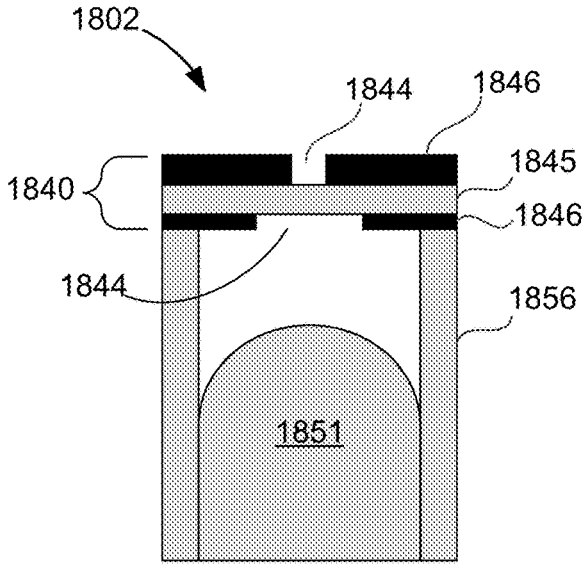

FIG. 18C

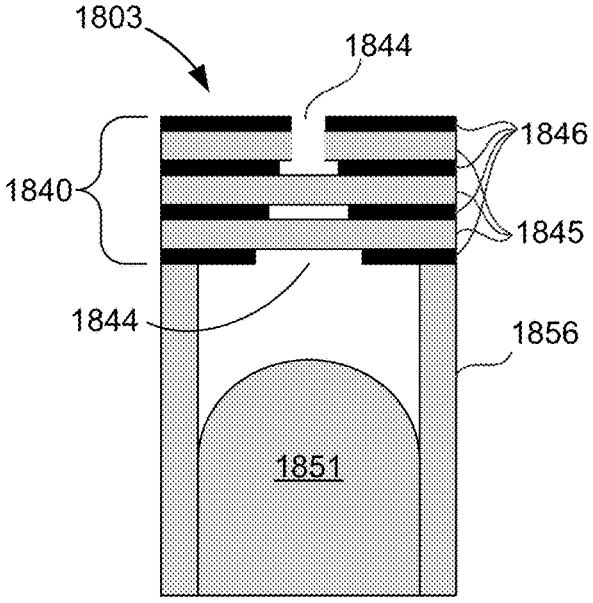

FIG. 18D

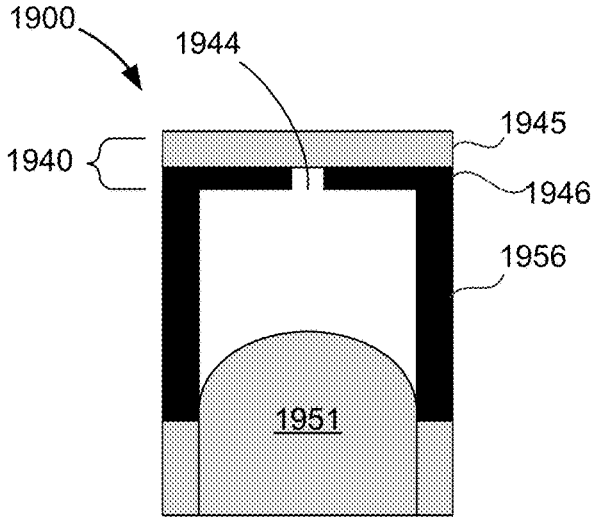

FIG. 19A

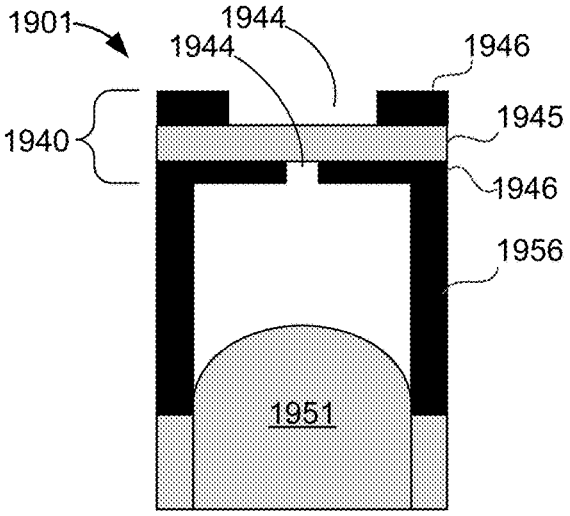

FIG. 19B

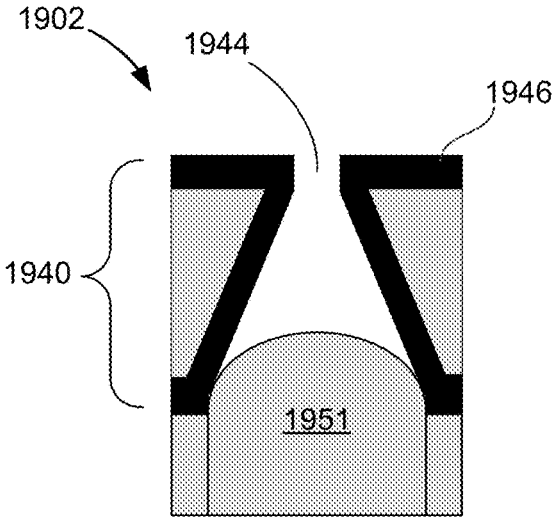

FIG. 19C

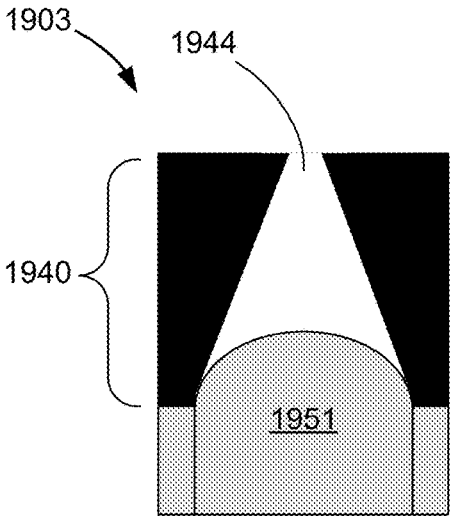

FIG. 19D

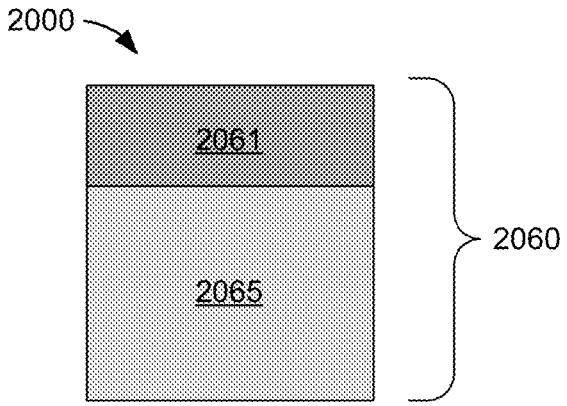

FIG. 20A

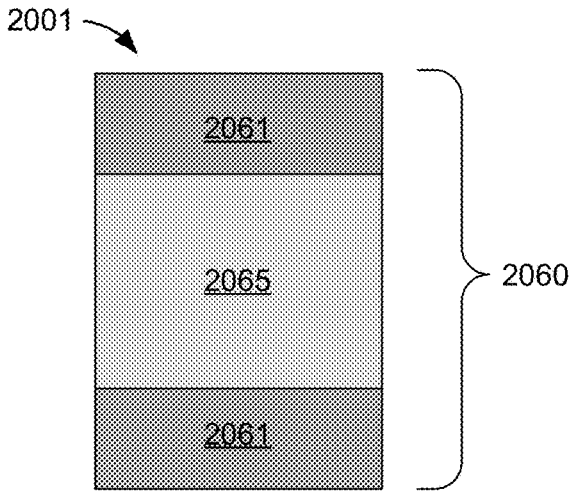

FIG. 20B

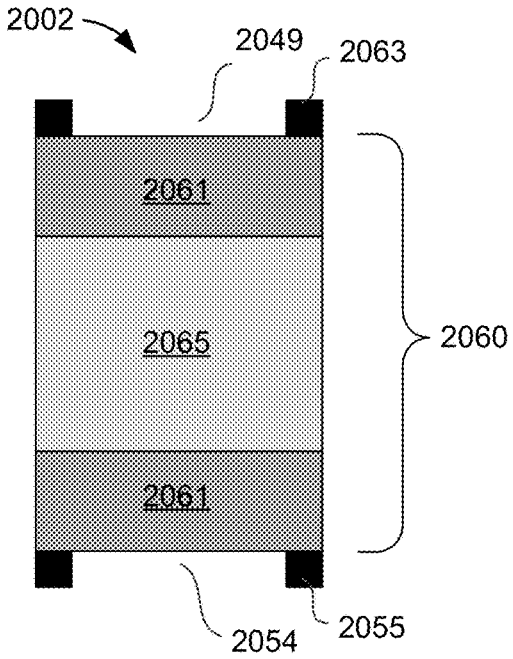

FIG. 20C

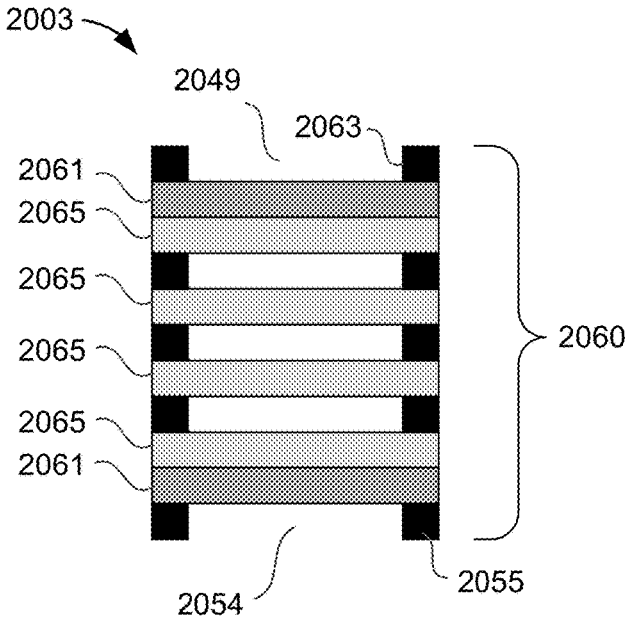

FIG. 20D

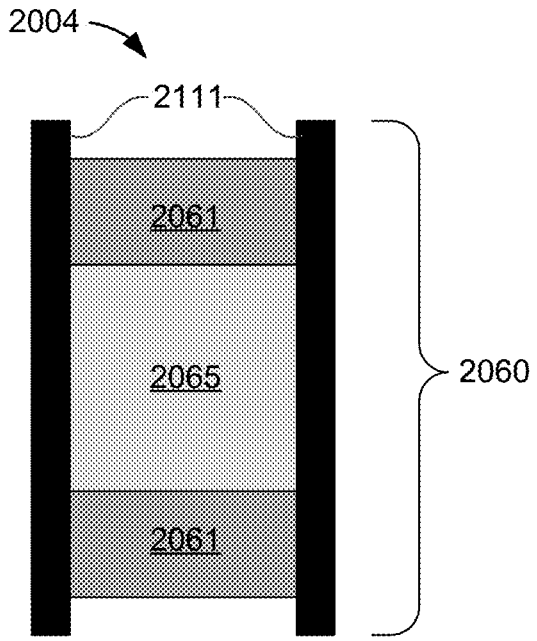

FIG. 20E

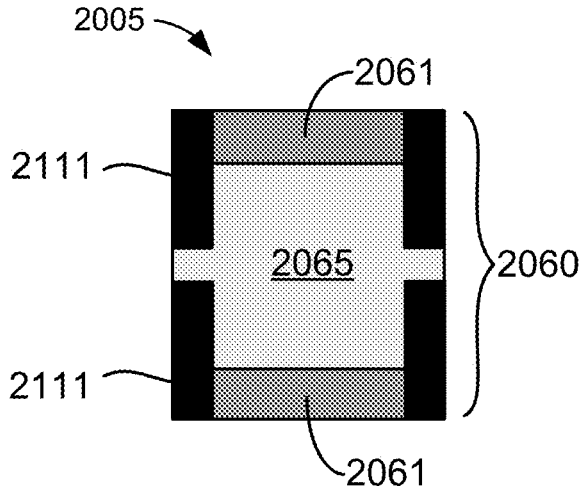

FIG. 20F

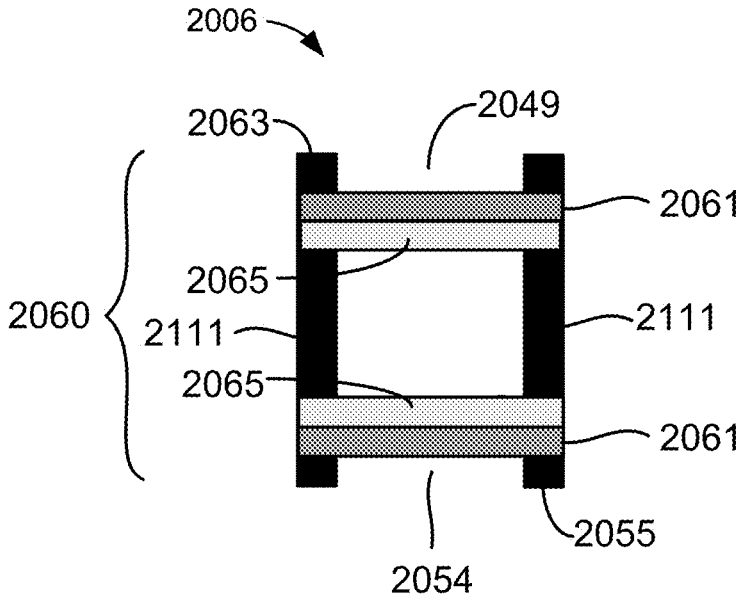

FIG. 20G

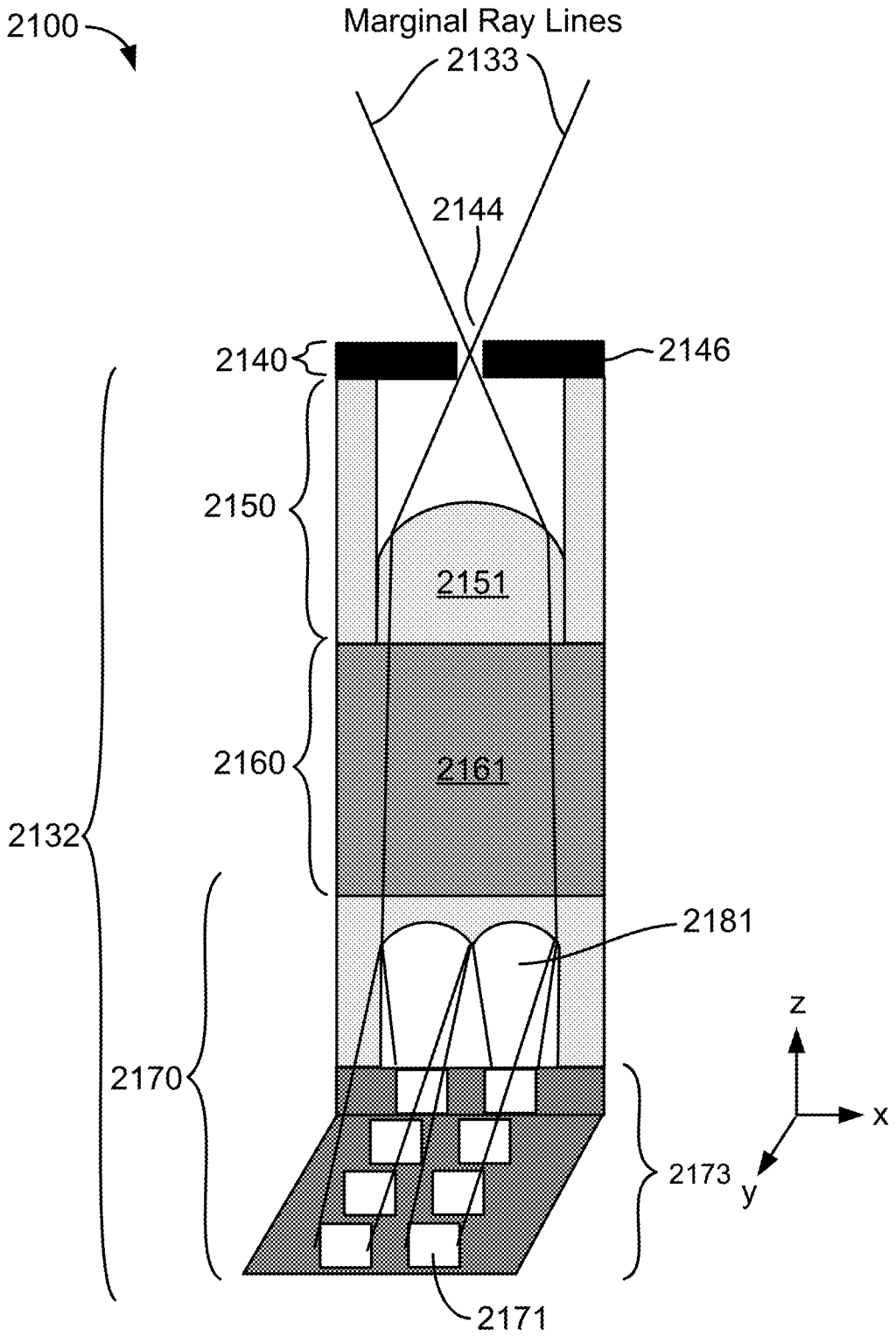
2100
Marginal Ray Lines
2133
2144
2140
2146
2150
2151
2160
2161
2132
2181
2170
z
x
y
2173
2171

FIG. 21A

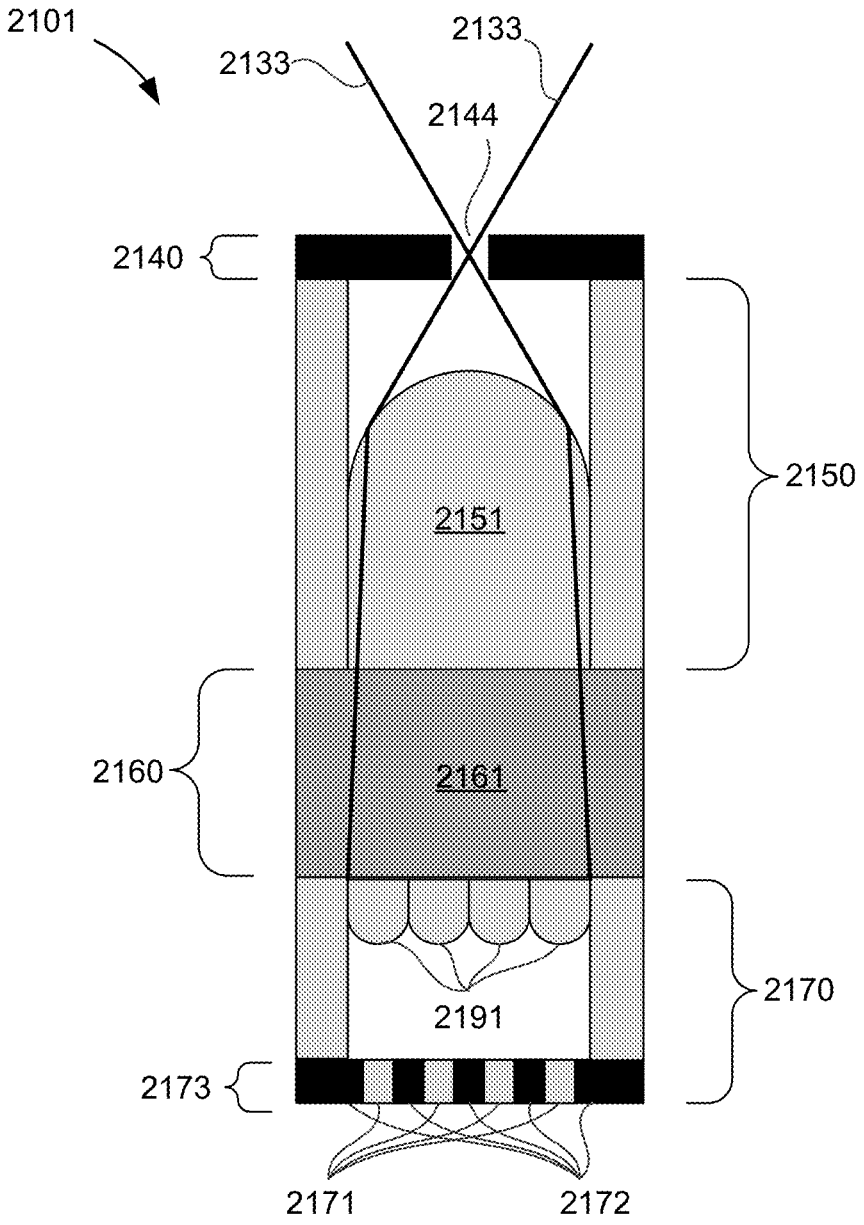
2101
2133
2133
2144
2140
2150
2151
2160
2161
2170
2191
2173
2171
2172

FIG. 21B

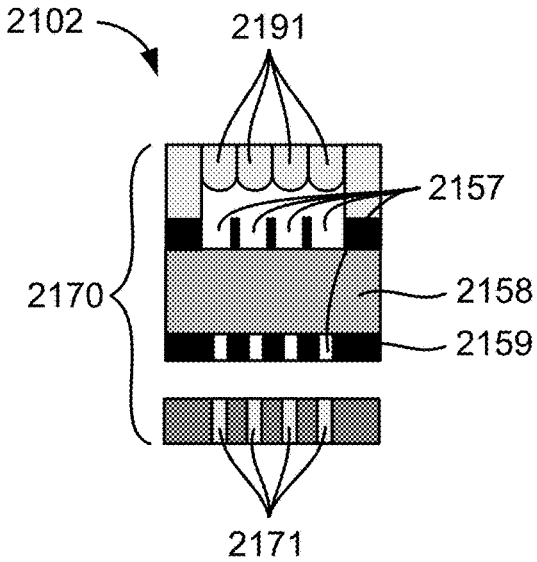

FIG. 21C

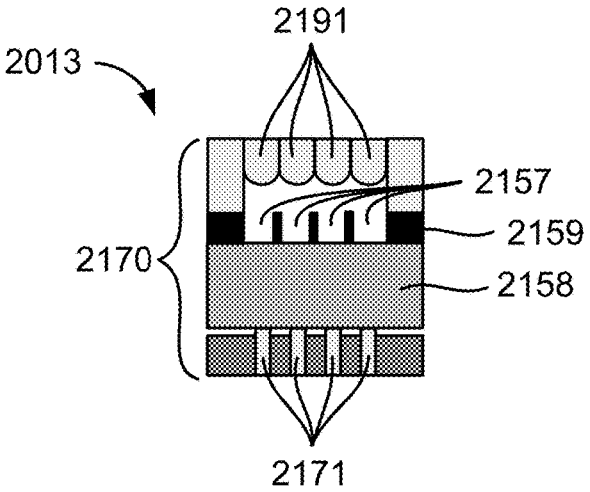

FIG. 21D

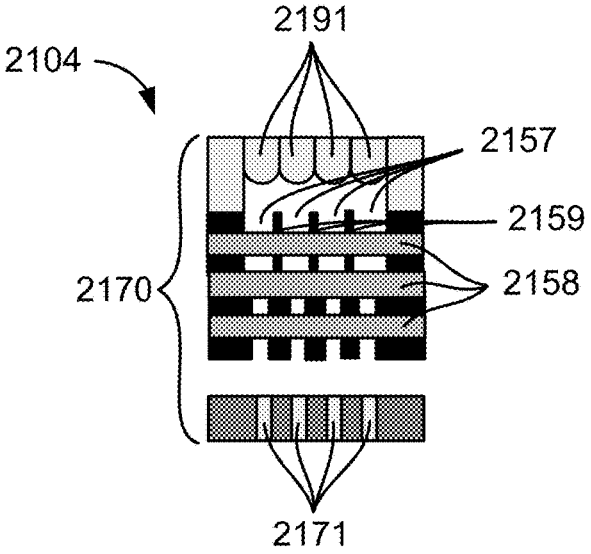

FIG. 21E

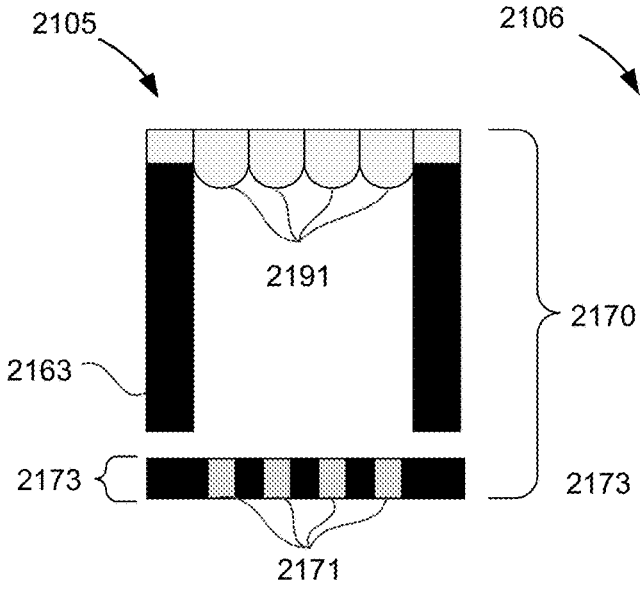

FIG. 21F

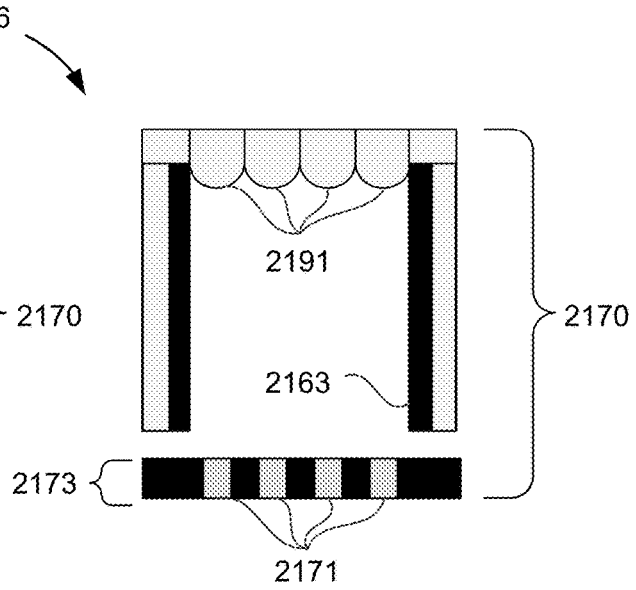

FIG. 21G

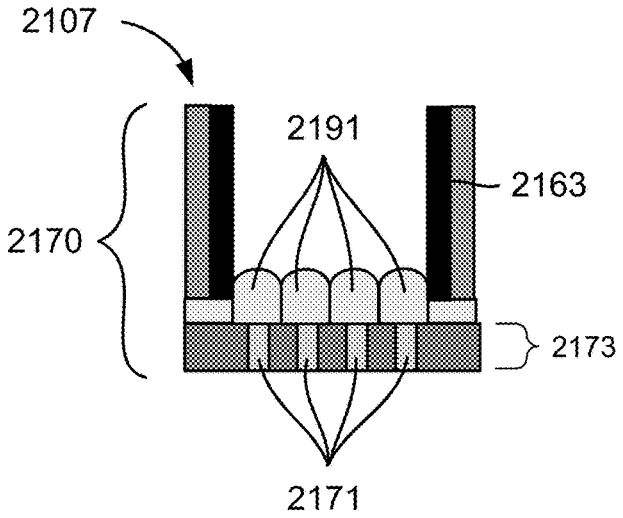

FIG. 21H

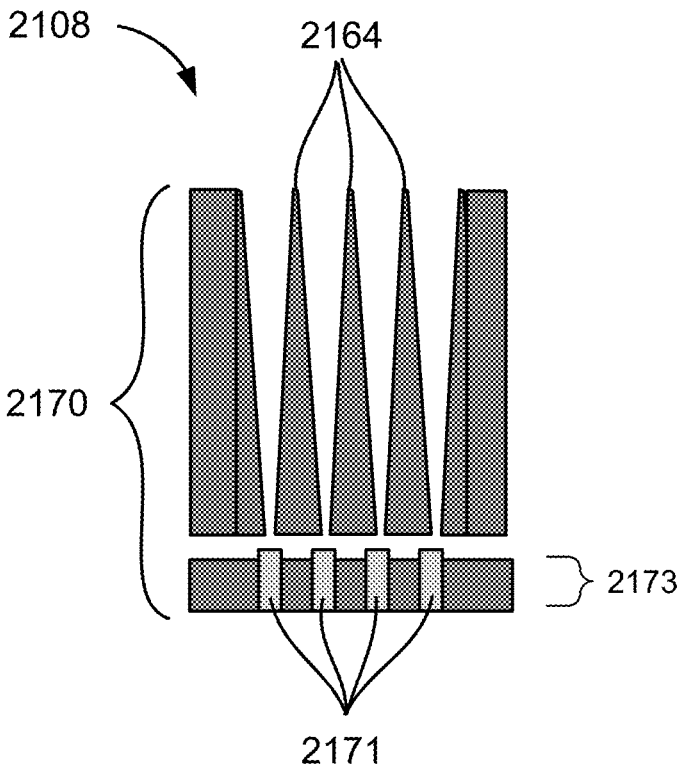

FIG. 21I

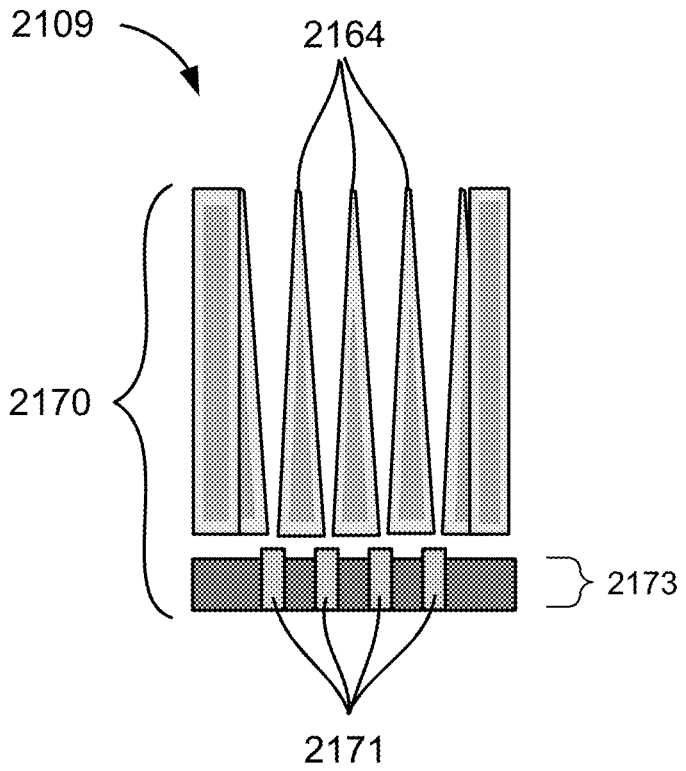

FIG. 21J

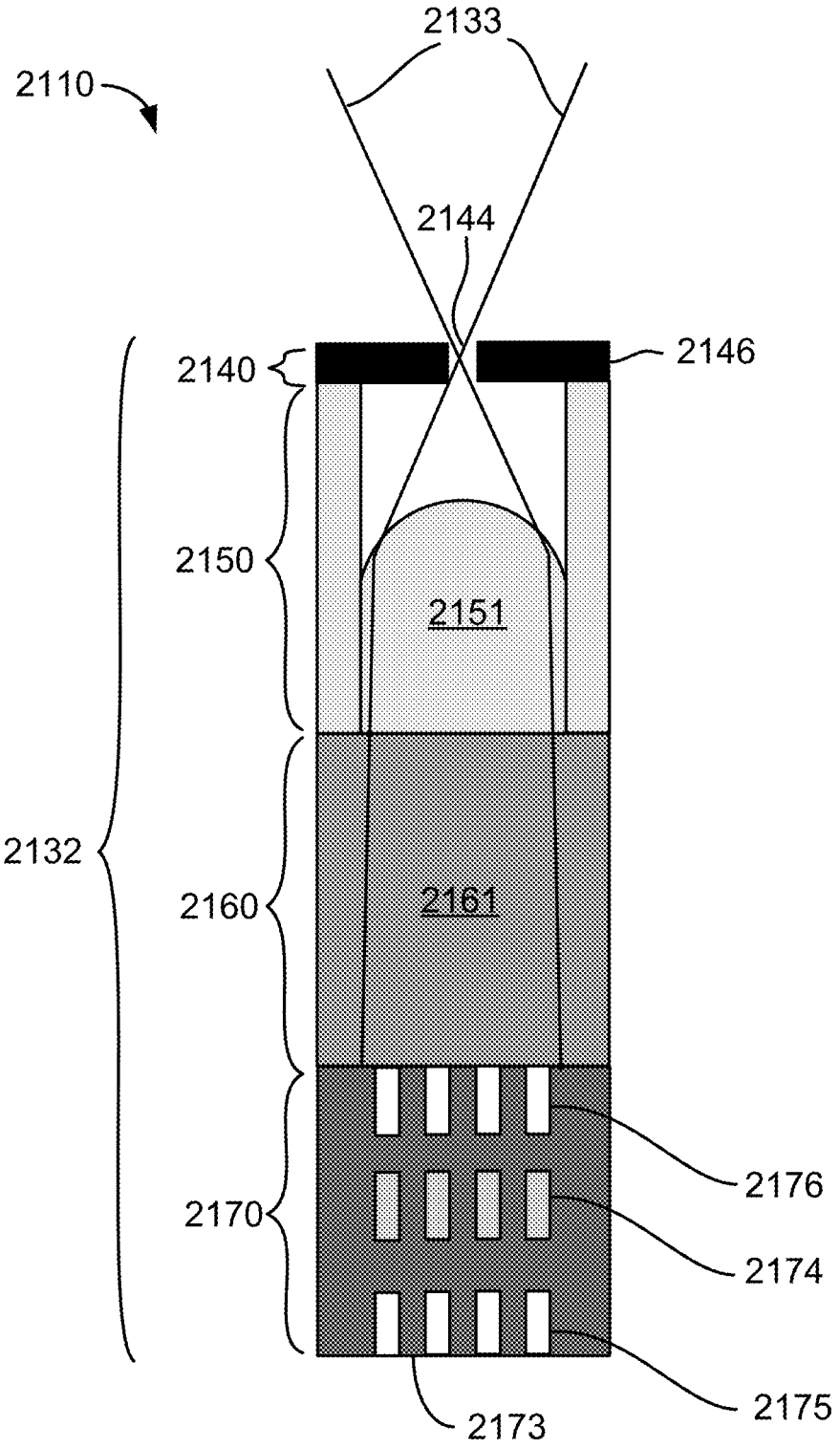
2133
2110
2144
2140
2146
2150
2151
2132
2160
2161
2176
2170
2174
2175
2173

FIG. 21K

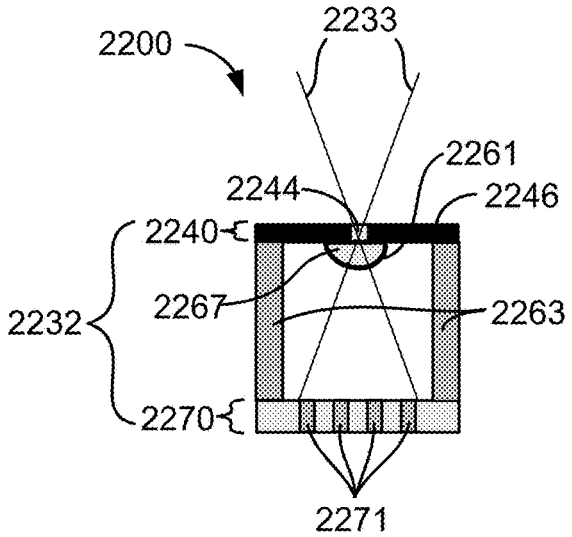

FIG. 22A

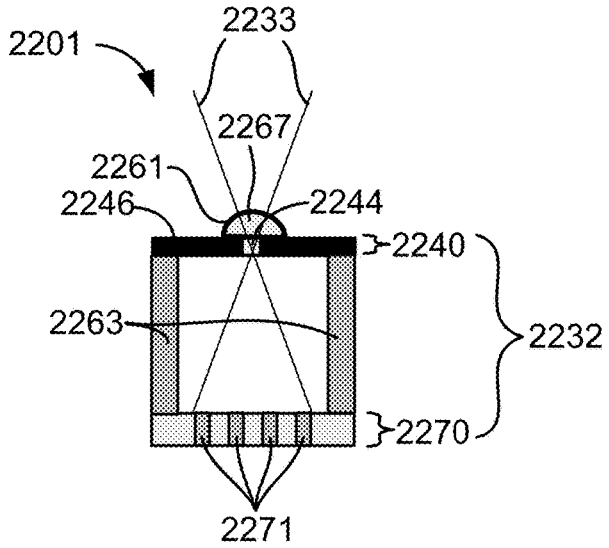

FIG. 22B

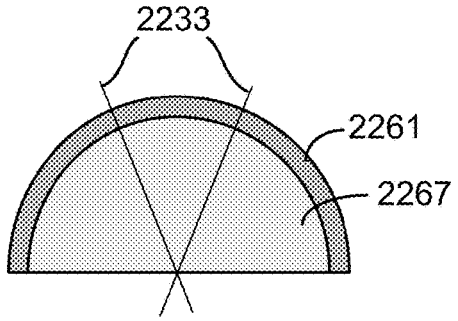

FIG. 22C

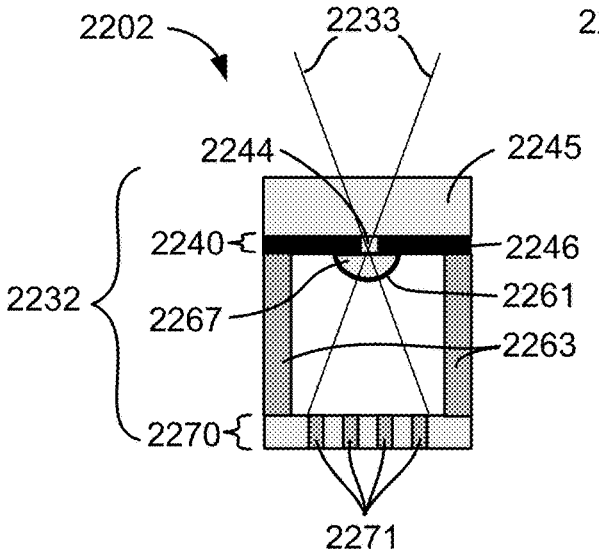

FIG. 22D

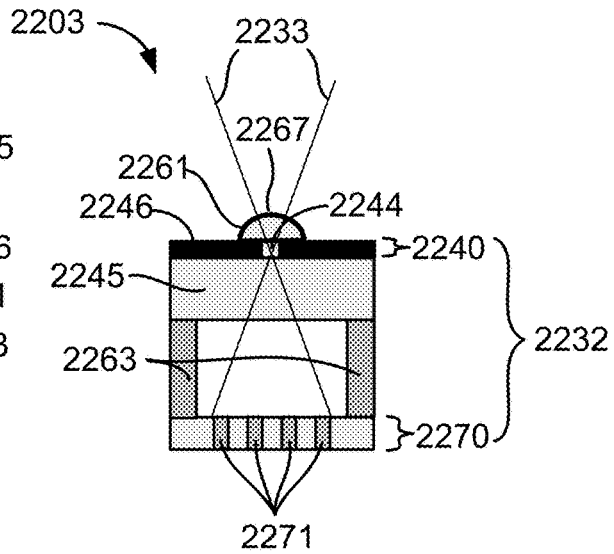

FIG. 22E

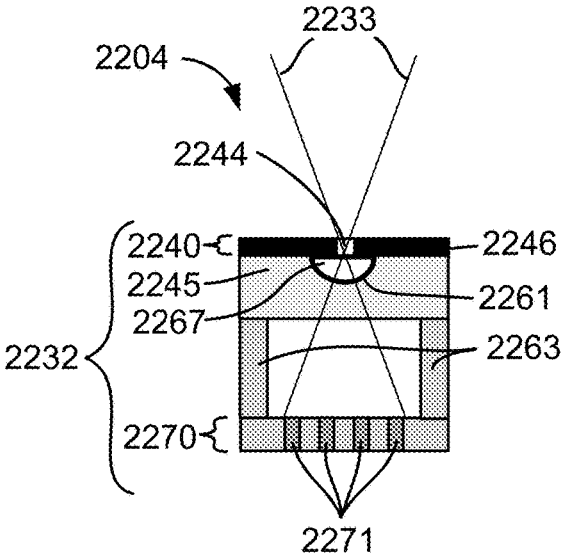

FIG. 22F

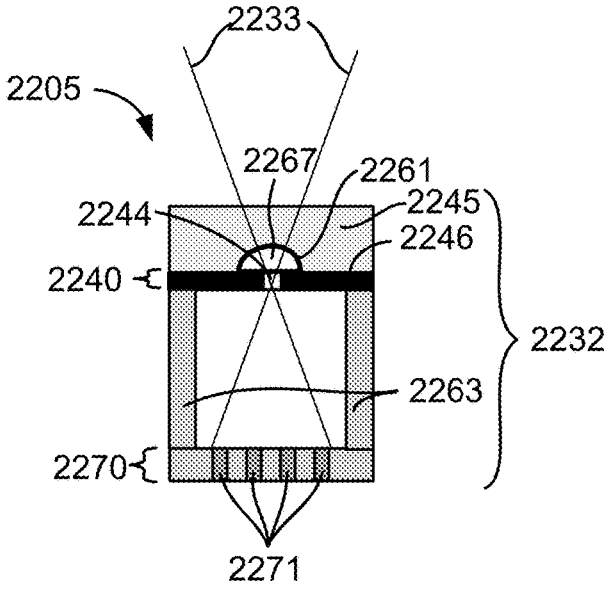

FIG. 22G

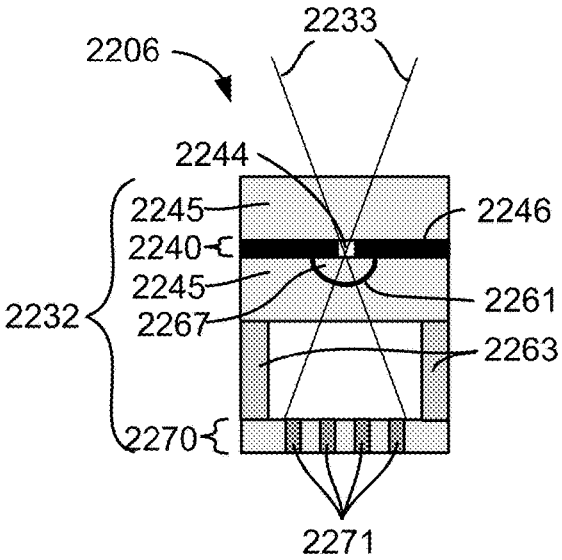

FIG. 22H

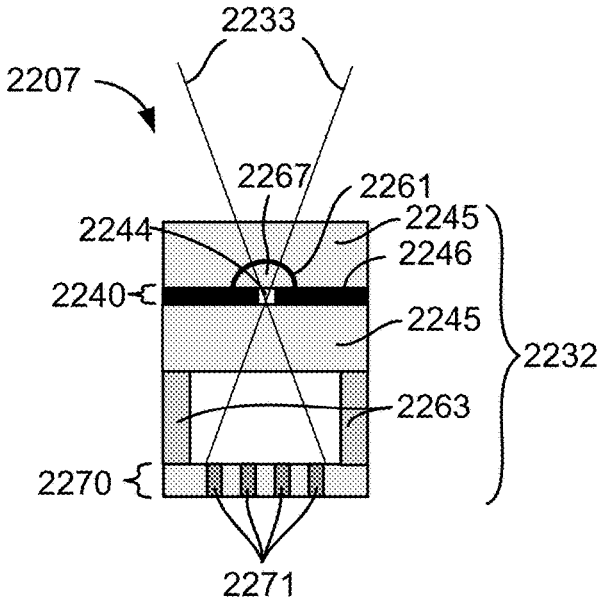

FIG. 22I

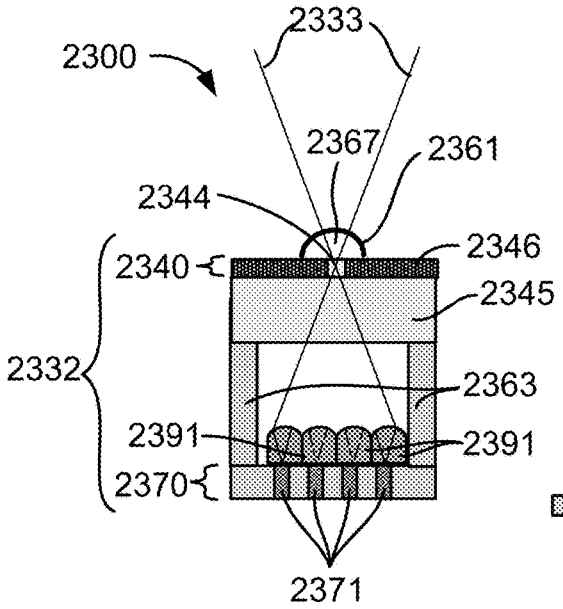

FIG. 23A

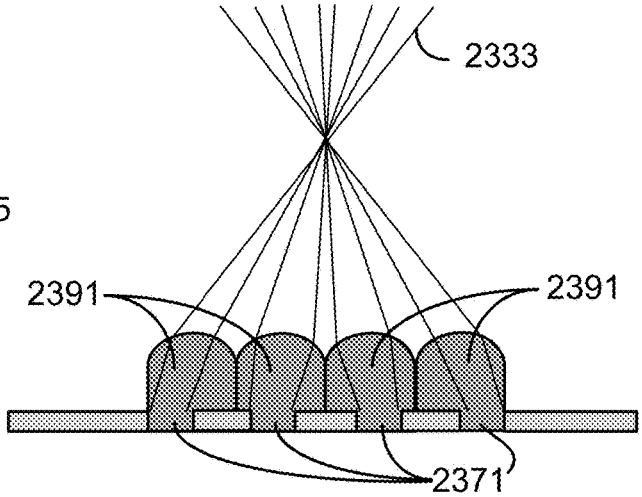

FIG. 23B

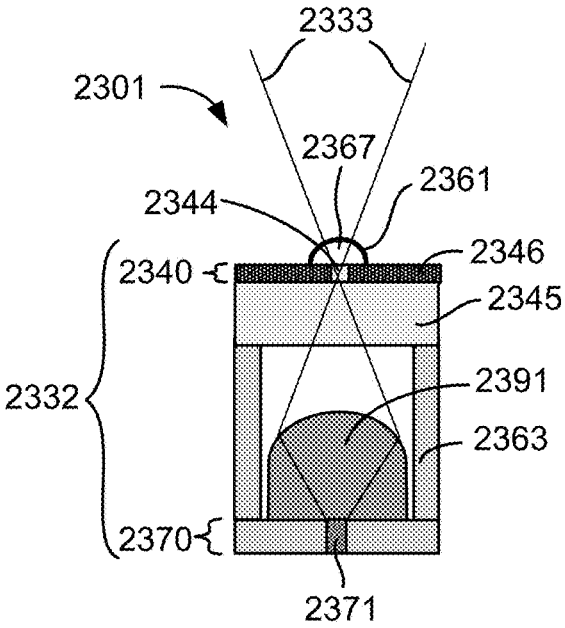

FIG. 23C

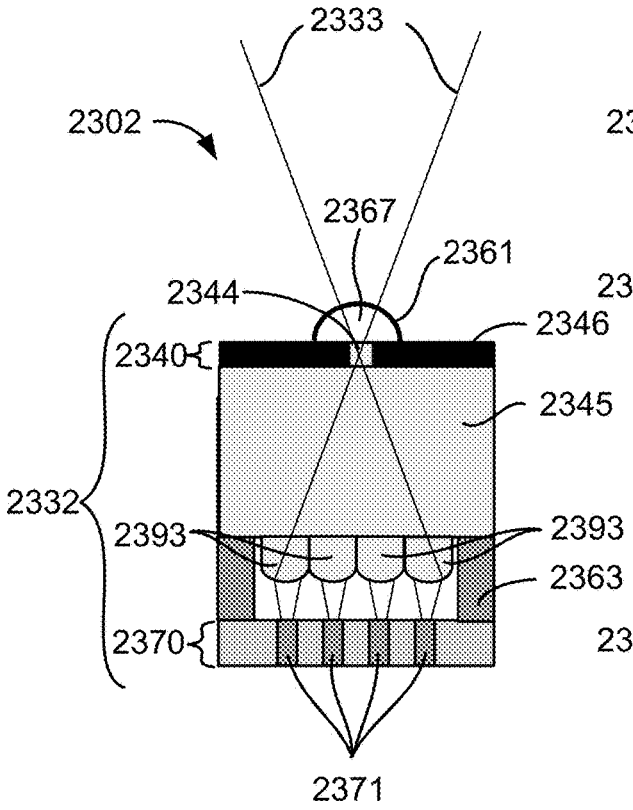

FIG. 23D

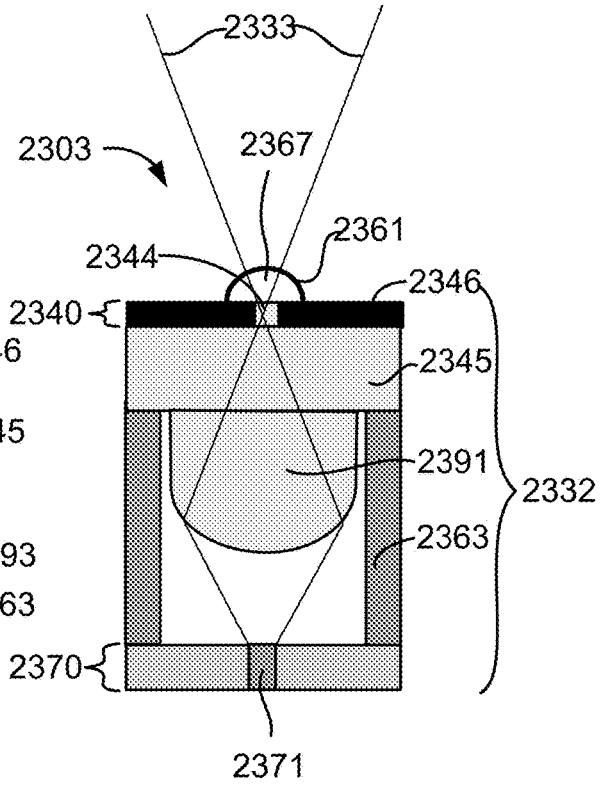

FIG. 23E

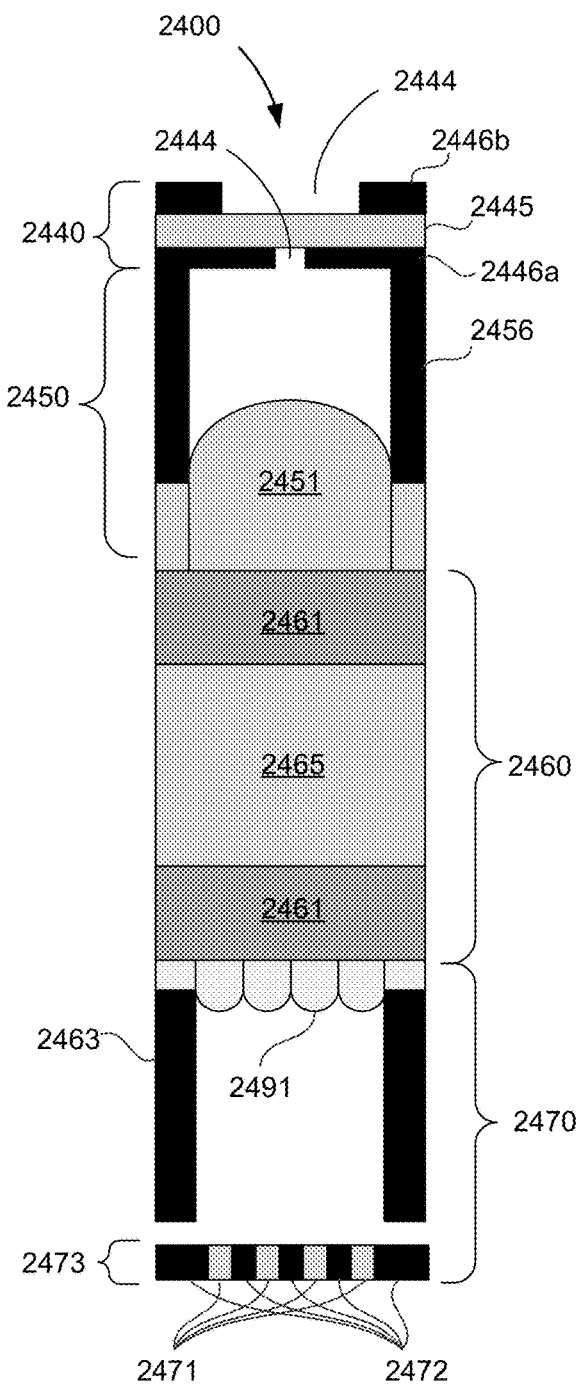
2400
2444
2444
2446b
2445
2440
2446a
2456
2450
2451
2461
2465
2460
2461
2463
2491
2470
2473
2471
2472

FIG. 24

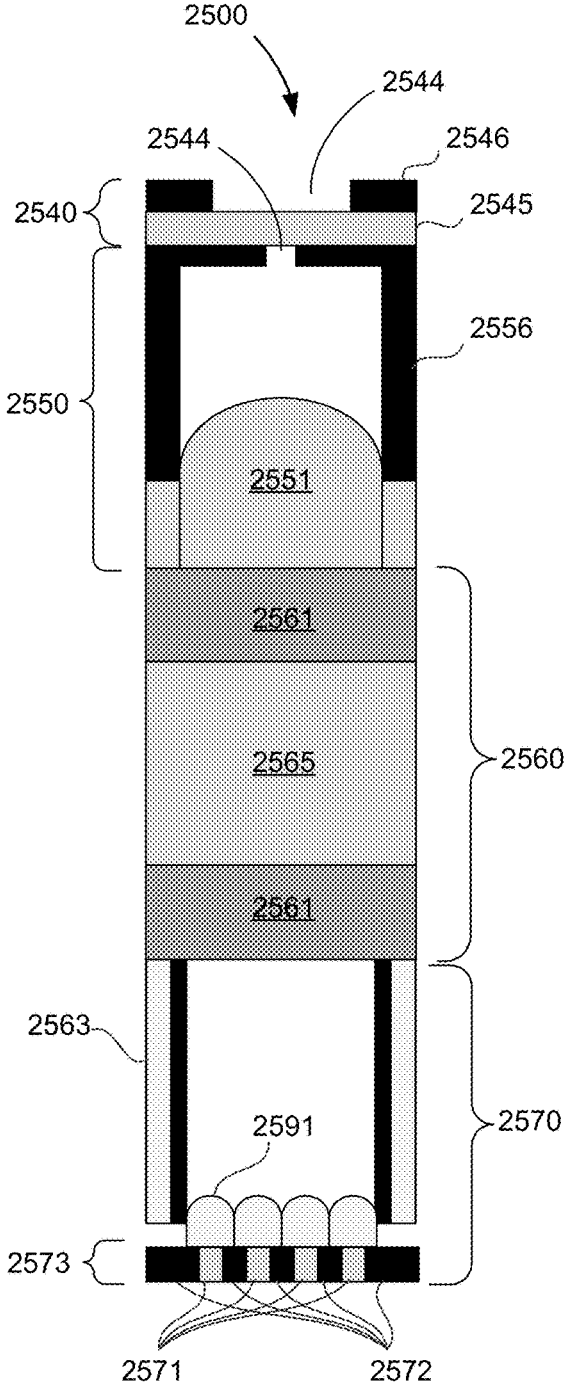
2500
2544
2544
2546
2545
2540
2556
2550
2551
2561
2565
2560
2561
2563
2591
2570
2573
2571
2572

FIG. 25

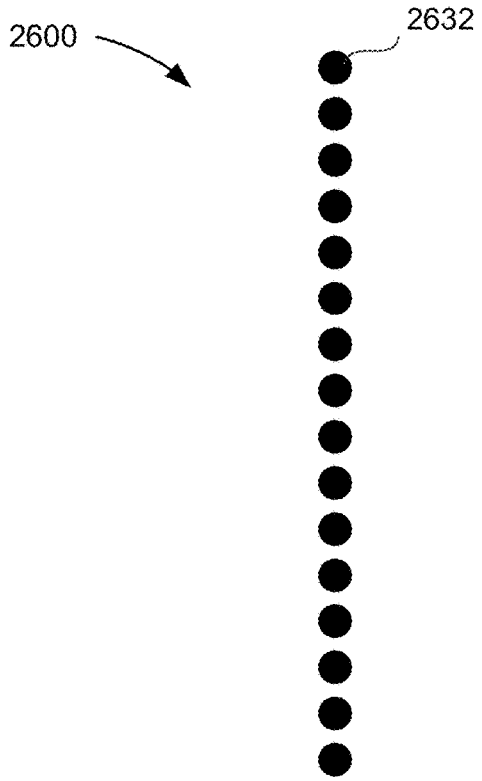

FIG. 26

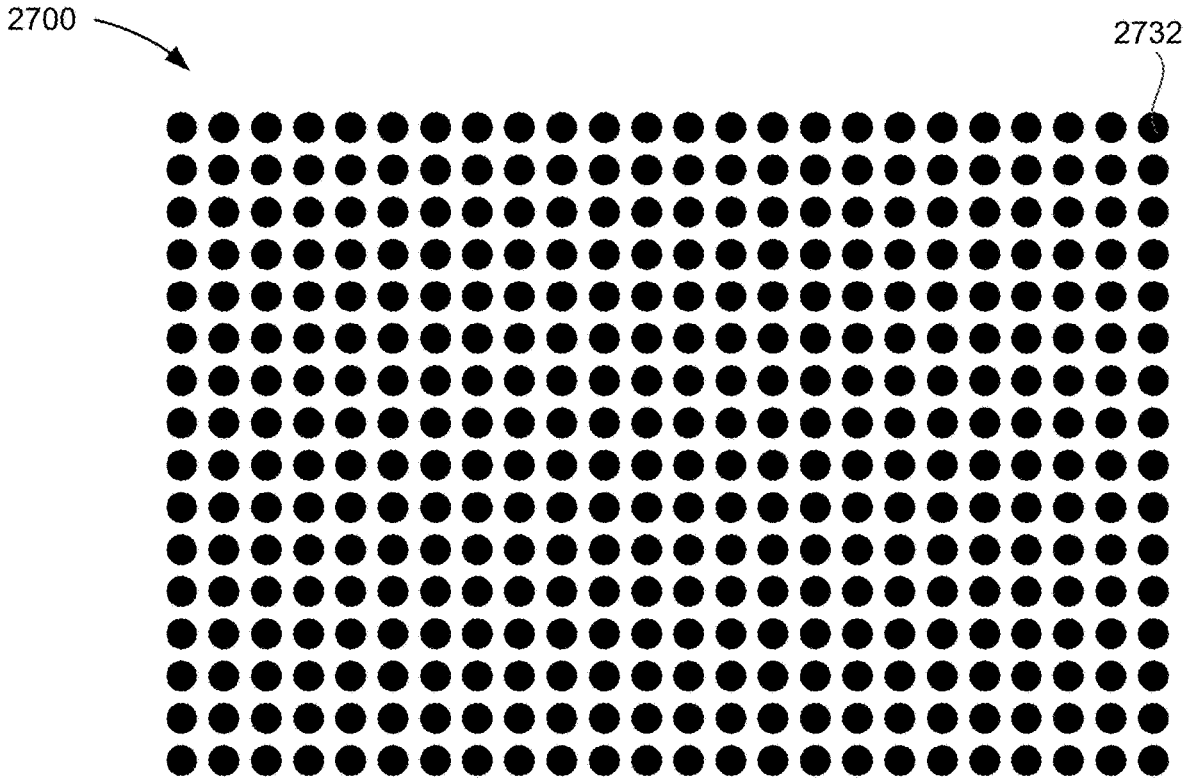

FIG. 27

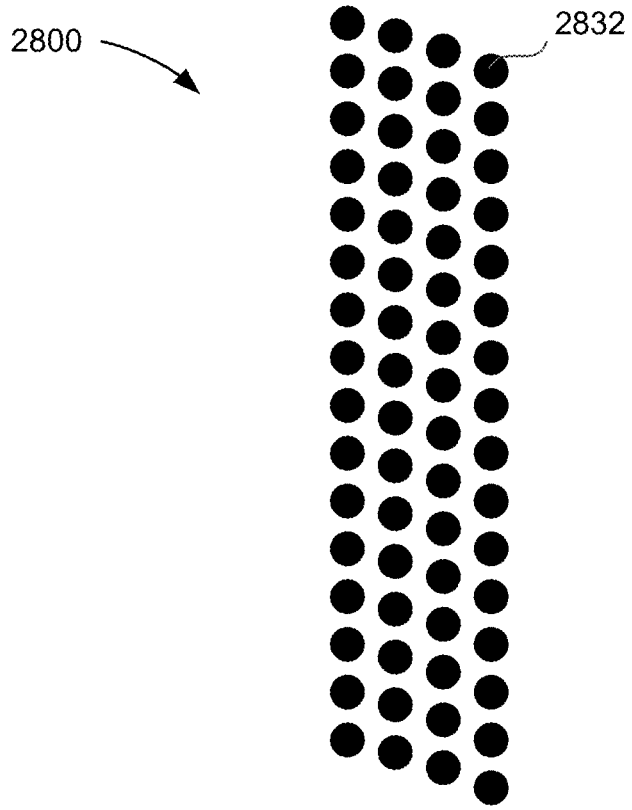

FIG. 28

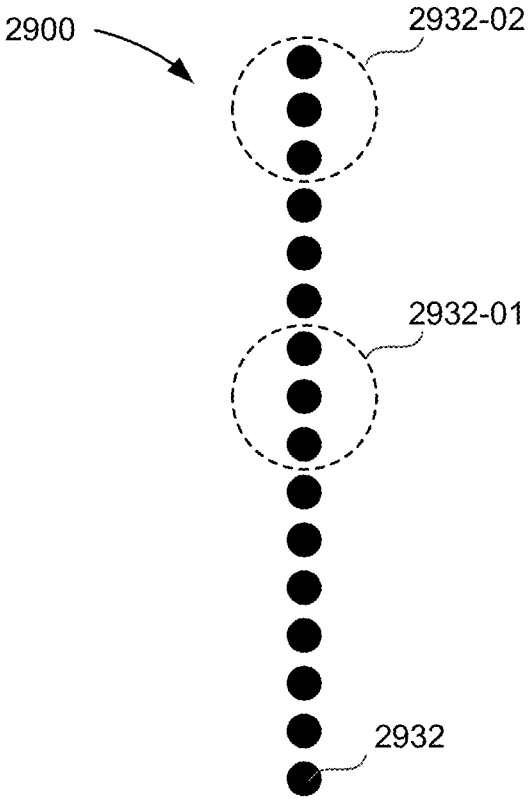

FIG. 29

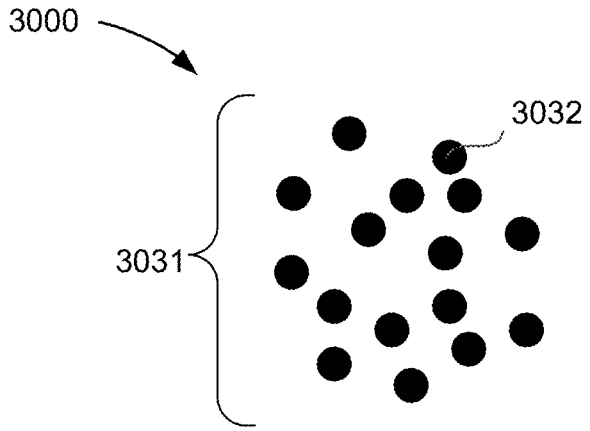

FIG. 30

SPINNING LIDAR UNIT WITH MICRO-OPTICS ALIGNED BEHIND STATIONARY WINDOW

CROSS REFERENCES TO RELATED APPLICATIONS

This application claims priority to U.S. Provisional Patent Application No. 62/506,449, filed on May 15, 2017, U.S. Provisional Patent Application No. 62/506,437, filed on May 15, 2017, U.S. Provisional Patent Application No. 62/506,445, filed on May 15, 2017, and U.S. Provisional Patent Application No. 62/515,291, filed Jun. 5, 2017, the disclosures of which are herein incorporated by reference in their entirety and for all purposes.

BACKGROUND

An imager detects light and creates a digital image of a scene based on that detected light. The image contains a fixed number of rows and columns of pixels where each pixel maps to a different field-of-view within the scene. Electronic imagers typically make use of photodetectors to convert light into electrical signals. Each photodetector is located at a different position on the focal plane and usually corresponds to a single pixel or a component of a pixel in the image. Electronic imagers can typically be classified as one of two types: a passive-illumination imager or an active-illumination imager. A passive-illumination imager collects ambient light such as sunlight reflected by objects in a scene, whereas an active-illumination imager illuminates the scene and collects reflected light generated by the active-illumination imager system itself.

A narrowband imager collects light within a limited wavelength range. This is in contrast to a traditional camera which detects light across the entire visible spectrum or into three different wide, RGB color bands, each of which may be 100 nm or wider. Narrowband imagers are harder to develop than traditional cameras due to the characteristics of the optical filters on which they rely. Optical filters serve to prevent some portion of the electromagnetic spectrum from reaching the photodetectors. Most narrowband filters rely on thin-film interference effects to selectively transmit or reflect light (such filters are often referred to as dielectric mirrors or Bragg mirrors). The spectral transmissivity of the narrowband filter depends on the number, thicknesses, ordering, and indices of refraction of the constituent layers forming the filter. The spectral transmissivity of the filter also depends upon the angle of incidence of the light upon the narrowband filter.

Current narrowband imagers have either a small field-of-view or are limited in their ability to filter wavelength bands narrower than around 50 nm. Optical filters are sensitive to the angle of incident light making it difficult to achieve a narrow range of wavelengths. For example, an optical filter may accept perpendicular light with wavelength at 940-945 nm and slightly oblique light at a wavelength of 930-935 nm. Since most photodetectors in a traditional camera have a large range of angles of light incident upon them, simply placing an optical filter in front of them would not actually achieve narrowband filtering. Constricting the angle of light incident upon the photodetector usually requires using a lens with a longer focal length, which constricts the field-of-view of the camera.

Imagers with a wide field-of-view have difficulty in generating uniformly clear visual images and in making uniform measurements across a scene. For example, the

pixels at the center of the image may appear brighter or represent a different wavelength of light compared to the pixels at the scene extremities. A wide field-of-view is desirable for some applications because it provides better situational awareness. For example, a camera-based automotive safety system meant to detect pedestrians around a vehicle might require monitoring in a 360 degree field-of-view around the vehicle. Fewer wide field-of-view sensors are required to do the same job (i.e., generate images of the full 360 degree field-of-view) as many narrow field of view sensors, thereby decreasing the system cost.

Narrowband imagers have many applications including geographic mapping, astronomy and in LIDAR (Light Detection and Ranging). Narrowband imagers can detect characteristic light wavelengths such as those generated by plants with chlorophyll or by elements within stars. Narrowband imagers can be used, for example, to determine vegetation health or to discover oil deposits. Optical receiver systems, such as LIDAR, can be used for object detection and ranging. LIDAR systems measure the distance to a target or objects in a landscape, by irradiating a target or landscape with light, using pulses from a laser, and measuring the time it takes photons to travel to the target or landscape and return after reflection to a narrowband imager. Other LIDAR techniques, such as photo-demodulation, coherent LIDAR, and range-gated LIDAR, also rely on the transmission and reflection of photons, though they may not directly measure the time-of-flight of pulses of laser light. For many LIDAR applications, it is beneficial for physical sizes of transmitters and receivers to small and compact, and at the same time relatively low in cost. For applications where objects must be sensed with accuracy at long distances, it is beneficial to increase or maximize the number of photons emitted by the transmitter and reflected back toward the receiver while keeping laser energy emissions within mandated safety limits.

Micro-optical systems are systems that include miniaturized, optical components that are typically between a few micrometers and a millimeter in size. Micro-optical receivers arrayed adjacent to each other are susceptible to crosstalk. Stray light caused by roughness of optical surfaces, imperfections in transparent media, back reflections, etc., may be generated at various features within the receiver channel or external to receiver channel. When multiple receiver channels are arrayed adjacent to one another, this stray light in one receiver channel may be absorbed by a photosensor in another channel, thereby contaminating the timing, phase, or other information inherent to photons. Minimizing crosstalk is especially important in active-illumination systems. Light reflected from a nearby retro-reflector (e.g. a license plate) may be thousands or millions of time more intense than light reflected from a distant, dark, lambertian surface (e.g. black cotton clothing). Thus, the stray light photons from a retro-reflector could vastly outnumber photons reflected from other surfaces in nearby photosensors if crosstalk is not minimized. This can result in the inability of a LIDAR system to detect dark objects that occupy fields of view near the field of view occupied by a retro-reflector.

SUMMARY

Embodiments of the disclosure provide optical imager systems that achieve wide field-of-view, narrowband imaging with micro-optic receiver channel arrays that minimize cross-talk and allow tight spectral selectivity that is uniform across the receiver channel array. Some optical imager

systems according to the disclosure can include a light transmission module that provides enhanced spot illumination such that a power level of light returning to a light sensing module is increased, while at the same time improving the spatial resolution of the measured image.

In some embodiments, an optical system for performing distance measurements includes a bulk transmitter optic, an illumination source, and a micro-optic channel array disposed between the illumination source and the bulk transmitter optic. The illumination source includes a plurality of light emitters aligned to project discrete beams of light through the bulk transmitter optic into a field ahead of the optical system. The micro-optic channel array defines a plurality of micro-optic channels where each micro-optic channel includes a micro-optic lens spaced apart from a light emitter from the plurality of light emitters with the micro-optic lens being configured to receive a light cone from the light emitter and generate a reduced-size spot image of the emitter at a focal point displaced from the emitter at a location between the emitter and the bulk transmitter optic. The micro-optic lens for each channel can be configured to receive a light cone from a light emitter and generate a reduced-size real spot image of the emitter at a focal point between the micro-optic lens and the bulk transmitter optic. A divergence of the light cone from the light emitter can be less than a divergence of a light cone from the second optical surface of the micro-optic lens for generating the reduced-size real spot image

In some additional embodiments, an optical system for performing distance measurements includes a light emission system and a light detection system. The light emission system includes a bulk transmitter optic, an illumination source comprising a plurality of light emitters aligned to project discrete beams of light through the bulk transmitter optic into a field ahead of the optical system, and a micro-optic channel array disposed between the illumination source and the bulk transmitter optic. The micro-optic channel array defines a plurality of micro-optic channels where each micro-optic channel includes a micro-optic lens spaced apart from a light emitter from the plurality of light emitters with the micro-optic lens being configured to receive a light cone from the light emitter and generate a reduced-size spot image of the emitter at a focal point displaced from the emitter at a location between the emitter and the bulk transmitter optic. The light detection system includes a bulk receiver optic configured to receive the discrete beams of light from the field, and an optical assembly having a plurality of micro-optic receiver channels defining a plurality of discrete, non-overlapping fields of view in the field. The optical assembly includes: an aperture layer having a plurality of discrete apertures arranged along a focal plane of the bulk receiver optic; an array of photosensors disposed behind the aperture layer; and a plurality of lenses positioned between the aperture layer and the array of photosensors.

In certain embodiments, an optical system for performing distance measurements includes a stationary housing having an optically transparent window, and a light ranging device disposed within the housing. The light ranging device includes an optical transmitter coupled to a platform. The optical transmitter includes a bulk transmitter optic, an illumination source, and a micro-optic channel array disposed between the illumination source and the bulk transmitter optic. The illumination source including a plurality of light emitters aligned to project discrete beams of light through the bulk transmitter optic into a field ahead of the optical system. The micro-optic channel array can be disposed between the illumination source and the bulk transmitter optic, and the micro-optic channel array can define a plurality of micro-optic channels where each micro-optic channel can include a micro-optic lens spaced apart from a light emitter from the plurality of light emitters with the micro-optic lens being configured to receive a light cone from the light emitter and generate a reduced-size spot image of the emitter at a focal point displaced from the emitter at a location between the emitter and the bulk transmitter optic.

In some embodiments, an optical system includes a bulk receiver optic configured to receive light rays originating from a field external to the optical system, and an optical assembly having a plurality of micro-optic receiver channels defining a plurality of discrete, non-overlapping fields of view in the field. The optical assembly includes an aperture layer having a plurality of discrete apertures arranged along a focal plane of the bulk receiver optic, an array of photosensors disposed behind the aperture layer, and a non-uniform optical filter layer configured to allow different micro-optic channels to measure different ranges of wavelengths. The non-uniform optical filter can include a graduated optical filter that gradually increases in thickness in one dimension, or increases in thickness in a step-wise fashion in one direction such that each channel has a constant optical filter layer thickness, but where the thicknesses for different micro-optic channels are different.

In some additional embodiments, an optical system includes a bulk receiver optic configured to receive light from a field external to the optical system, an aperture layer disposed behind the bulk optic and including a plurality of apertures located at a focal plane of the bulk optic, a lens layer including a plurality of collimating lenses having a focal length, the lens layer disposed behind the aperture layer and separated from the aperture layer by the focal length, a non-uniform optical filter layer behind the lens layer, and a photosensor layer including a plurality of photosensors. The aperture layer, lens layer, non-uniform optical filter layer and photosensor layer are arranged to form a plurality of micro-optic channels defining a plurality of discrete, non-overlapping fields of view in the field with each micro-optic channel in the plurality of micro-optic channels including an aperture from the plurality of apertures, a lens from the plurality of lenses, a filter from the filter layer, and a photosensor from the plurality of photosensors and being configured to communicate light incident from the bulk receiver optic to the photosensor of the micro-optic channel. The non-uniform optical filter layer is configured to allow different micro-optic channels to measure different ranges of wavelengths.

In certain embodiments, an optical system includes a bulk receiver optic configured to receive light rays originating from a field external to the optical system, and an optical assembly having a plurality of micro-optic receiver channels defining a plurality of discrete, non-overlapping fields of view in the field. The optical assembly includes a monolithic ASIC including a processor, a memory, and a plurality of photosensors fabricated in the ASIC, an aperture layer having a plurality of discrete apertures arranged along a focal plane of the bulk receiver optic, the array of photosensors disposed behind the aperture layer; a plurality of lenses positioned between the aperture layer and the array of photosensors; and a non-uniform optical filter layer having different center wavelengths across its structure to allow at least two different micro-optic receiver channels to measure different ranges of wavelengths of light, wherein the aperture layer, plurality of lenses, and non-uniform optical filter

layer are formed on the ASIC such that they form part of the monolithic structure of the ASIC.

In some embodiments, an optical system for performing distance measurements includes a stationary housing having an optically transparent window, a spinning light ranging device disposed within the housing, a motor disposed within the housing and operatively coupled to spin the light ranging device including the platform, optical transmitter, and optical receiver within the housing, and a system controller disposed within the housing, the system controller configured to control the motor and to start and stop light detection operations of the light ranging device. The light ranging device includes a platform, an optical transmitter coupled to the platform, and an optical receiver coupled to the platform. The optical transmitter includes a bulk transmitter optic and a plurality of transmitter channels, each transmitter channel including a light emitter configured to generate and transmit a narrowband light through the bulk transmitter optic into a field external to the optical system. The optical receiver includes a bulk receiver optic and a plurality of micro-optic receiver channels, each micro-optic channel including an aperture coincident with a focal plane of the bulk receiver optic, an optical filter positioned along a path of light from the bulk receiver optic and axially aligned with the aperture, and a photosensor responsive to incident photons passed through the aperture and the optical filter.

In some additional embodiments, an optical system for performing distance measurements includes a stationary housing having a base, a top and an optically transparent window disposed between the base and the top, a spinning light ranging device disposed within the housing and aligned with the optically transparent window, a motor disposed within the housing and operatively coupled to spin the light ranging device including the platform, optical transmitter and optical receiver within the housing, and a system controller disposed within the housing, the system controller configured to control the motor and to start and stop light detection operations of the light ranging device. The light ranging device including a platform, an optical transmitter coupled to the platform, and an optical receiver coupled to the platform. The optical transmitter including an image-space telecentric bulk transmitter optic and a plurality of transmitter channels, each channel including a light emitter configured to generate and transmit a narrowband light through the bulk transmitter optic into a field external to the optical system. The optical receiver including an image-space telecentric bulk receiver optic and a plurality of micro-optic receiver channels, each micro-optic channel including an aperture coincident with a focal plane of the bulk receiver optic, a collimating lens behind the aperture, an optical filter behind the collimating lens and a photosensor responsive to incident photons passed through the aperture into the collimating lens and through the filter.

In certain embodiments, an optical system for performing distance measurements includes a stationary housing having a base, a top and an optically transparent window disposed between the base and the top, a light ranging device disposed within the housing and aligned with the optically transparent window, a motor disposed within the housing and operatively coupled to spin the light ranging device within the housing; and a system controller disposed within the housing, the system controller configured to control the motor and to start and stop light detection operations of the light ranging device. The light ranging device includes a platform, a plurality of vertical-cavity surface emitting lasers (VCSELs) arranged in an array, and an optical receiver coupled to the platform. Each VCSEL in the plurality of VCSELs are configured to generate and transmit discrete pulses of light into a field external to the optical system. The optical receiver including a bulk receiver optic, a plurality of photosensors, each photosensor comprising a plurality of single-photon avalanche diodes (SPADs) responsive to incident photons, and an optical filter disposed between the bulk receiver optic and the plurality of photosensors and configured to allow a band of light to pass through the filter to the plurality of photosensors while blocking light outside the band from reaching the plurality of photosensors.

In some embodiments, an optical system for performing distance measurements includes a rotatable platform, an optical transmitter coupled to the rotatable platform and comprising a bulk transmitter optic and a plurality of transmitter channels, an optical receiver coupled to the rotatable platform and comprising a bulk receiver optic and a plurality of micro-optic receiver channels, a motor disposed within the housing and operatively coupled to spin the platform, optical transmitter, and optical receiver, a system controller mounted to a stationary component of the optical system; and an optical communication link operatively coupled between the system controller and the optical receiver to enable the system controller to communicate with the optical receiver. Each transmitter channel includes a light emitter configured to generate and transmit a narrowband light through the bulk transmitter optic into a field external to the optical system. Each micro-optic channel includes an aperture coincident with a focal plane of the bulk receiver optic, an optical filter positioned along a path of light from the bulk receiver optic and axially aligned with the aperture, and a photosensor responsive to incident photons passed through the aperture and through the filter. The optical communication link can extend between the stationary component of the optical system and the rotatable platform to operatively couple the system controller with the optical receiver. The optical receiver can further include a collimating lens behind the aperture and directly coupled to the optical filter, the optical filter positioned behind the collimating lens.

In some additional embodiments, an optical system for performing distance measurements including a rotatable platform, an optical transmitter coupled to the rotatable platform and comprising an image-space telecentric bulk transmitter optic and a plurality of transmitter channels, an optical receiver coupled to the rotatable platform and comprising an image-space telecentric bulk receiver optic and a plurality of micro-optic receiver channels, a motor disposed within the housing and operatively coupled to spin the platform, optical transmitter and optical receiver, a system controller mounted to a stationary component of the optical system, and an optical communication link operatively coupled between the system controller and the optical receiver to enable the system controller to communicate with the optical receiver. Each transmitter channel includes a light emitter configured to generate and transmit a narrowband light through the bulk transmitter optic into a field external to the optical system. Each micro-optic channel includes an aperture coincident with a focal plane of the bulk receiver optic, a collimating lens behind the aperture, an optical filter behind the collimating lens and a photosensor responsive to incident photons passed through the aperture into the collimating lens and through the filter.

In certain embodiments, An optical system for performing distance measurements includes a rotatable platform, a plurality of vertical-cavity surface emitting lasers (VCSELs) arranged in an array and coupled to the rotatable platform, an optical receiver coupled to the rotatable platform, a motor disposed within the housing and operatively coupled to spin

the platform, the plurality of VCSELs and the optical receiver; a system controller mounted to a stationary component of the optical system, and an optical communication link operatively coupled between the system controller and the optical receiver to enable the system controller to communicate with the optical receiver. Each VCSEL in the plurality of VCSELs are configured to generate and transmit discrete pulses of light into a field external to the optical system. The optical receiver including a bulk receiver optic and a plurality of photosensors, each photosensor comprising a plurality of single-photon avalanche diodes (SPADs) responsive to incident photons.

In some embodiments, an optical system for performing distance measurements includes a bulk receiver optic, an aperture layer including a plurality of apertures, a first lens layer including a first plurality of lenses, an optical filter layer configured to receive light after it passes through the bulk receiver optic and pass a band of radiation while blocking radiation outside the band, and a photosensor layer including a plurality of photosensors, Each photosensor includes a plurality of photodetectors configured to detect photons, and a second plurality of lenses configured to focus incident photons received at the photosensor on the plurality of photodetectors. The optical system includes a plurality of receiver channels with each receiver channel in the plurality of receiver channels including an aperture from the plurality of apertures, a lens from the plurality of first lenses, an optical filter from the optical filter layer, and a photosensor from the plurality of photosensors, with the aperture for each channel defining a discrete, non-overlapping field of view for its respective channel. For each receiver channel in the plurality of receiver channels, there can be a one-to-one correspondence between the plurality of photodetectors and the second plurality of lenses in the photosensor for that channel, where each of the lenses in the second plurality of lenses can be configured to focus photons on its corresponding lens in the second plurality of lenses

In some additional embodiments, an optical system for performing distance measurements includes a light emission system and a light detection system. The light emission system including a bulk transmitter optic and an illumination source. The illumination source including a plurality of light emitters aligned to project discrete beams of light through the bulk transmitter optic into a field ahead of the optical system. The light detection system including a bulk receiver optic, an aperture layer including a plurality of apertures, a first lens layer including a first plurality of lenses, an optical filter layer configured to receive light after it passes through the bulk receiver optic and pass a band of radiation while blocking radiation outside the band, and a photosensor layer including a plurality of photosensors. Each photosensor includes a plurality of photodetectors configured to detect photons, and a second plurality of lenses configured to focus incident photons received at the photosensor on the plurality of photodetectors. The optical system includes a plurality of receiver channels with each receiver channel in the plurality of receiver channels including an aperture from the plurality of apertures, a lens from the plurality of first lenses, an optical filter from the optical filter layer, and a photosensor from the plurality of photosensors, with the aperture for each channel defining a discrete, non-overlapping field of view for its respective channel.

In certain embodiments, an optical system for performing distance measurements including a stationary housing having an optically transparent window, a light ranging device disposed within the housing and aligned with the optically transparent window, a motor disposed within the housing and operatively coupled to spin the light ranging device including the platform, optical transmitter, and optical receiver within the housing, and a system controller disposed within the housing. The system controller configured to control the motor and to start and stop light detection operations of the light ranging device. The light ranging device including a platform, an optical transmitter coupled to the platform, an optical receiver coupled to the platform. The optical transmitter including a bulk transmitter optic and a plurality of transmitter channels, each transmitter channel including a light emitter configured to generate and transmit a narrowband light through the bulk transmitter optic into a field external to the optical system. The optical receiver including a bulk receiver optic, an aperture layer including a plurality of apertures, a first lens layer including a first plurality of lenses, an optical filter layer configured to receive light after it passes through the bulk receiver optic and pass a band of radiation while blocking radiation outside the band, and a photosensor layer including a plurality of photosensors. Each photosensor includes a plurality of photodetectors configured to detect photons, and a second plurality of lenses configured to focus incident photons received at the photosensor on the plurality of photodetectors. The optical system includes a plurality of receiver channels with each receiver channel in the plurality of receiver channels including an aperture from the plurality of apertures, a lens from the plurality of first lenses, an optical filter from the optical filter layer, and a photosensor from the plurality of photosensors, with the aperture for each channel defining a discrete, non-overlapping field of view for its respective channel.

A better understanding of the nature and advantages of embodiments of the present disclosure may be gained with reference to the following detailed description and the accompanying drawings.

BRIEF DESCRIPTION OF THE DRAWINGS

FIG. **1** is a block diagram of an exemplary passive optical imager system, according to some embodiments of the present disclosure.

FIG. **2** is a simplified diagram of an exemplary light detection system for a passive optical imager system, according to some embodiments of the present disclosure.

FIGS. **3**A and **3**B are perspective views of a simplified diagram of different embodiments of micro-optic receiver layers with graduated filter layers, according to some embodiments of the present disclosure.

FIG. **4** is a block diagram of a rotating LIDAR system, according to some embodiments of the present disclosure.

FIGS. **5**A-**5**B are simple illustrations of exemplary implementations of solid state LIDAR systems, according to some embodiments of the present disclosure.

FIG. **6**A-**6**B are simple illustrations of exemplary implementations of scanning LIDAR systems, according to some embodiments of the present disclosure.

FIG. **7** is an exemplary perspective view diagram showing an embodiment of a LIDAR system employing a 360 scanning architecture, according to some embodiments of the present disclosure.

FIG. **8** is an illustrative example of the light transmission and detection operation for a light ranging system, according to some embodiments of the present disclosure.

FIG. **9** is a flowchart illustrating a method of using coded pulses in an optical measurement system, according to embodiments of the present disclosure.

FIG. **10** is a simplified diagram illustrating a detailed view of an exemplary active optical imager system having a wide field-of-view and capable of narrowband imaging, according to some embodiments of the present disclosure.

FIGS. **11-14** are simplified cross-sectional view diagrams of various exemplary enhanced light emission systems, according to some embodiments of the present disclosure.

FIGS. **15**A-**15**C are cross-sectional views of simplified diagrams of exemplary active imager systems having different implementations of corrective optical structures for astigmatism, according to some embodiments of the present disclosure.

FIG. **16**A is a simplified cross-sectional view diagram of part of a light detection system **1600** where there is no cross-talk between channels.

FIG. **16**B is a simplified cross-sectional view diagram of part of a light detection system **1601** where there is cross-talk between channels.

FIG. **17** is a simplified cross-sectional diagram of an exemplary micro-optic receiver channel structure, according to some embodiments of the present disclosure.

FIGS. **18**A-**18**D are simplified cross-sectional view diagrams of various aperture layers for a receiver channel, according to some embodiments of the present disclosure.

FIGS. **19**A-**19**D are simplified cross-sectional view diagrams of various spacer structures between the aperture layer and the optical lens layer for a receiver channel, according to some embodiments of the present disclosure.

FIGS. **20**A-**20**G are simplified cross-sectional view diagrams of various optical filter layers for a receiver channel, according to some embodiments of the present disclosure.

FIGS. **21**A-**21**K are simplified cross-sectional view diagrams of various photosensor layers with diffusers for a receiver channel, according to some embodiments of the present disclosure.

FIGS. **22**A-**22**I are simplified cross-sectional view diagrams of various hemispherical receiver structures for a receiver channel, according to some embodiments of the present disclosure.

FIGS. **23**A-**23**E are simplified cross-sectional view diagrams of various bottom micro lens layers for a receiver channel, according to some embodiments of the present disclosure.

FIGS. **24** and **25** are simplified cross-sectional view diagrams of exemplary receiver channels, according to some embodiments of the present disclosure.

FIGS. **26-30** are simplified top view diagrams of exemplary micro-optical receiver arrays, according to some embodiments of the present disclosure.

DETAILED DESCRIPTION

Some embodiments of the disclosure pertain to optical imager systems that can generate an image from ambient light in a field and/or light emitted from an optical transmitter that has reflected off of an object in the field. For instance, in some embodiments an optical imager system can be a passive system that does not actively illuminate a scene or given area and instead detects ambient light in the scene or area reflected off of one or more objects in the scene or area. A passive optical imager system can include a light sensing module for receiving ambient light in the field. The light sensing module can be a wide field-of-view, narrowband optical imaging system (WFNBI) that collects imaging information. The light sensing module can include one or more bulk receiver optics, a micro-optic receiver system, and a system controller for operating the light sensing module. According to some embodiments of the present disclosure, the micro-optic receiver system can include one or more micro-optic receiver layers and one or more photosensors, each photosensor can include one or more photodetectors that can measured received light.

A bulk imaging optic as defined herein can be one or more optical surfaces, possibly including multiple lens elements, that have clear apertures greater than one millimeter and that is positioned to receive light projected from, or focus received light on, a micro-optic transmitter/receiver layer. A bulk imaging optic that projects light received from an optical emitter, such as a micro-optic transmitter layer, is sometimes referred to herein as a bulk transmitter optic or as an output bulk imaging optic. A bulk optic layer that focuses light received from a field onto an optical detector, such as a micro-optic receiver layer, is sometimes referred to herein as a bulk receiver optic or as an input bulk imaging optic. An input, image-space telecentric bulk imaging optic allows the system to measure narrowband light uniformly over a wide field-of-view (FOV). The micro-optic receiver layer can include a one- or two-dimensional array of micro-optic receiver channels where each micro-optic receiver channel has multiple components including one or more of an aperture, a collimating micro-lens, an optical filter, and a photosensor. In some instances, the micro-optical receiver channel structure has a columnar arrangement with enclosures having absorbent and/or reflective side walls and/or focusing funnels. The micro-optic receiver channel maximizes the collection of incoming rays through its aperture, collimates the light to make it perpendicular to the optical filter, and minimizes crosstalk with adjacent micro-optic receiver channels due to mixing of inputs from neighboring apertures, as will be discussed in detail below. In various instances, bulk imaging optics according to the present disclosure modify light or other radiation for an entire array of emitters or photosensors. Micro-optic structures can be included as part of the array and can modify light differently for different emitters and/or photosensors in the array. In some embodiments, there is one or more micro-optic elements for each individual array element (photosensor and/or emitter).

In some embodiments, the optical imager system can be an active system that can emit light into a field and then detect the emitted light after it has reflected off surfaces of an object in the field. An active optical imager system can include a light transmission module in addition to a light sensing module, and be configured as a light ranging device. The light transmission module can include a transmitter layer that is composed of an array of individual emitters where each emitter can be paired with a corresponding micro-optic receiver channel in the light sensing module, or it can be a uniform illuminator that spreads light evenly across the scene with no specific pairing between individual emitters and receiver channels. In some instances, the light transmission module can include a micro-optic transmitter channel array to enhance light outputted from the array of emitters. During operation, light outputted by the array of emitters (e.g., laser pulses) passes through the micro-optic transmitter channel array and enters a bulk transmitter optic having a large numerical aperture to better capture light from the micro-optic transmitter channel array. The light then exits the bulk transmitter optic and illuminates a plurality of spots at a distant field. The micro-optic transmitter channel array can improve the brightness of beams emanating from the bulk transmitter optic to provide enhanced spot illumi-

nation, while at the same time improving the spatial resolution of the measured image, as will be discussed in detail further herein.

According to some embodiments of the present disclosure, the imager system is a wide field-of-view, narrowband optical system. Thus, the imager can capture images and detect light across a FOV of at least 10 degrees. In certain embodiments, the imager can capture images and detect light across a FOV of at least 20, and across a FOV of at least 30 degrees in some embodiments. Furthermore, the imager can detect light at a wavelength of approximately 10 nm or less. In some particular embodiments, the light sensing module can detect light at a wavelength of approximately 5 nm or less. In some embodiments, the imager system can capture detect light at a wavelength of less than 5 nm across a FOV of approximately 32 degrees. The FOV can be in the vertical or horizontal direction, or any other angle in between.

To better understand the function and configuration of passive and active optical imager systems according to embodiments of the disclosure, each will be discussed in detail herein.

I. Passive Optical Imager Systems

A passive optical imager system receives ambient light to generate an image. FIG. **1** is a block diagram of an exemplary passive optical imager system **100**, according to some embodiments of the present disclosure. Passive optical imager system **100** includes a passive light capturing device **102** for capturing light existing within a field. Passive light capturing device **102** can include a system controller **104** and a light sensing module **106**. Imaging data can be generated by passive light capturing device **102** by receiving light existing in a field in which passive optical imager system **100** is positioned. The received light can be light that exists naturally in the field, i.e., ambient light, as opposed to light emitted from a transmitter within system **100**.

Light sensing module **106** can include a sensor array **108**, which can be, e.g., a one-dimensional or two-dimensional array of photosensors. Each photosensor (also just called a "sensor" or sometimes referred to by one skilled in the art as a "pixel") can include a collection of photodetectors, e.g., SPADs or the like, or a sensor can be a single photon detector (e.g., an APD). Light sensing module **106** includes an optical sensing system **110**, which when taken together with sensor array **108** can form a light detection system **112**. In some embodiments, optical sensing system **110** can include a bulk receiver optic **114** and optical components **116**, such as an aperture layer, a collimating lens layer and an optical filter, that can be combined with sensor array **108** to form an array of micro-optic receiver channels where each micro-optic receiver channel measures light that corresponds to an image pixel in a distinct field of view of the surrounding field in which system **100** is positioned. Further details of various embodiments of micro-optic receiver channels according to the present disclosure are discussed in detail in conjunction with FIGS. **17-30** below.

In some embodiments, sensor array **108** of light sensing module **106** is fabricated as part of a monolithic device on a single substrate (using, e.g., CMOS technology) that includes both an array of photosensors, a processor **118**, and a memory **120** for signal processing the measured light from the individual photosensors (or groups of photosensors) in the array. The monolithic structure including sensor array **108**, processor **118**, and memory **120** can be fabricated as a dedicated ASIC. In some embodiments, optical components **116** can also be a part of the monolithic structure in which sensor array **108**, processor **118**, and memory **120** are a part. In such instances, optical components **116** can be formed, e.g., bonded (non-reversibly) with epoxy, on the ASIC so that it becomes part of the monolithic structure, as will be discussed further below. As mentioned above, processor **118** (e.g., a digital signal processor (DSP), microcontroller, field programmable gate array (FPGA), and the like) and memory **120** (e.g., SRAM) can perform the signal processing. As an example of signal processing, for each photosensor or grouping of photosensors, memory **120** of light sensing module **106** can accumulate detected photons over time, and these detected photons can be used to recreate an image of the field.

In some embodiments, the output from processor **118** is sent to system controller **104** for further processing, e.g., the data can be encoded by one or more encoders of the system controller **104** and then sent as data packets to user interface **115**. System controller **104** can be realized in multiple ways including, e.g., by using a programmable logic device such an FPGA, as an ASIC or part of an ASIC, using a processor **122** with memory **124**, and some combination of the above. System controller **104** can cooperate with a stationary base controller or operate independently of the base controller (via pre-programmed instructions) to control light sensing module **106** by sending commands that include start and stop light detection and adjust photodetector parameters. In some embodiments, system controller **104** has one or more wired interfaces or connectors for exchanging data with light sensing module **106**. In other embodiments, system controller **104** communicates with light sensing module **106** over a wireless interconnect such as an optical communication link.

Passive optical imager system **100** can interact with a user interface **115**, which can be any suitable user interface for enabling a user to interact with a computer system, e.g., a display, touch-screen, keyboard, mouse, and/or track pad for interfacing with a laptop, tablet, and/or handheld device computer system containing a CPU and memory. User interface **115** may be local to the object upon which passive optical imager system **100** is mounted but can also be a remotely operated system. For example, commands and data to/from passive optical imager system **100** can be routed through a cellular network (LTE, etc.), a personal area network (Bluetooth, Zigbee, etc.), a local area network (WiFi, IR, etc.), or a wide area network such as the Internet.

User interface **115** of hardware and software can present the imager data from the device to the user but can also allow a user to control passive optical imager system **100** with one or more commands. Example commands can include commands that activate or deactivate the imager system, specify photodetector exposure level, bias, sampling duration and other operational parameters (e.g., emitted pulse patterns and signal processing), specify light emitters parameters such as brightness. In addition, commands can allow the user to select the method for displaying results. The user interface can display imager system results which can include, e.g., a single frame snapshot image, a constantly updated video image, and/or a display of other light measurements for some or all pixels.

As mentioned herein, one or more components of optical sensing system **110** can be part of a monolithic structure with sensor array **108**, processor **118**, and memory **120**. For example, an aperture layer, collimating lens layer, and an optical filter layer of optical components **116** can be stacked over and bonded with epoxy to a semiconductor substrate having multiple ASICs fabricated thereon at the wafer level before or after dicing. For instance, the optical filter layer can be a thin wafer that is placed against the photosensor layer and then bonded to the photosensor layer to bond the

optical filter layer with the photosensor layer to have the optical layer form part of the monolithic structure; the collimating lens layer can be injection molded onto the optical filter layer; and, the aperture layer can be formed by layering a non-transparent substrate on top of a transparent substrate or by coating a transparent substrate with an opaque film. Alternatively, the photosensor layer can be fabricated and diced, and the optical filter layer, collimating lens layer, and the aperture layer can be fabricated and diced. Each diced photosensor layer and optical layers can then be bonded together to form a monolithic structure where each monolithic structure includes the photosensor layer, optical filter layer, collimating lens layer, and the aperture layer. By bonding the layers to the ASIC, the ASIC and the bonded layers can form a monolithic structure. The wafer can then be diced into devices, where each device can be paired with a respective bulk receiver optic **114** to form light sensing module **106**. In yet other embodiments, one or more components of light sensing module **106** can be external to the monolithic structure. For example, the aperture layer may be implemented as a separate metal sheet with pin-holes. A more detailed view of an optical sensing system and a sensor array according to an embodiment of the disclosure is discussed herein with respect to FIG. **2**.

FIG. **2** is a simplified diagram of an exemplary light detection system **200** according to some embodiments of the present disclosure. Light detection system **200** can be representative of light detection system **112** discussed above with respect to FIG. **1**. Light detection system **200** can include an optical sensing system and a sensor array. The optical sensing system can include bulk receiver optics, an aperture layer, a collimating lens layer, and an optical filter layer; and the sensor array can include an array of photosensors, where each photosensor can include one or more photodetectors for measuring light. According to some embodiments, these components operate together to receive light from a field. For instance, light detection system **200** can include a bulk receiver optic **202** and a micro-optic receiver (Rx) layer **204**. During operation, light rays **206** enter bulk receiver optic **202** from multiple directions and gets focused by bulk receiver optic **202** to form light cones **208**. Micro-optic receiver layer **204** is positioned so that apertures **210** coincide with the focal plane of bulk receiver optic **202**. In some embodiments, micro-optic receiver layer **204** can be a one-dimensional or two-dimensional array of micro-optic receiver channels **212**, where each micro-optic receiver channel **212** is formed of a respective aperture **210**, collimating lens **214**, and photosensor **216** positioned along the same axis in the direction of light flow, e.g., horizontal from left to right as shown in FIG. **2**. Furthermore, each micro-optic receiver channel **212** can be configured various ways to mitigate interference from stray light between photosensors, as will be discussed further herein. During operation, each micro-optic receiver channel **212** measures light information for a different pixel (i.e., position in the field).

At the focal point of bulk receiver optic **202**, light rays **206** focus and pass through apertures **210** in an aperture layer **211** and into respective collimating lenses **214**. Each collimating lens **214** collimates the received light so that the light rays all enter the optical filter at approximately the same angle, e.g., parallel to one another. The aperture and focal length of bulk receiver optic **202** determine the cone angle of respective light rays that come to a focus at aperture **210**. The aperture size and the focal length of collimating lenses **214** determine how well-collimated the admitted rays can be, which determines how narrow of a bandpass can be implemented in optical filter **218**. Apertures **210** can serve various functions during the operation of light detection system **200**. For instance, apertures **210** can (1) constrain the pixel FOV so it has tight spatial selectivity despite a large pitch at the photosensor plane, (2) provide a small point-like source at the collimating lens's focal plane to achieve tight collimation of rays before passing through the filter, where better collimation results in a tighter band that can pass through the filter, and (3) reject stray light.

Optical filter **218** blocks unwanted wavelengths of light. Interference-based filters tend to exhibit strong angle dependence in their performance. For example, a 1 nm wide bandpass filter with a center wavelength (CWL) of 900 nm at a zero-degree angle of incidence might have a CWL of 898 nm at a fifteen-degree angle of incidence. Imaging systems typically use filters several tens of nanometers wide to accommodate this effect, so that the shift in CWL is much smaller than the bandpass width. However, the use of micro-optic layer **204** allows all rays to enter optical filter **218** at approximately the same angle of incidence, thus minimizing the shift in CWL and allowing very tight filters (e.g. less than 10 nm wide) to be used. Photosensor **216** generates electrical currents or voltages in response to incident photons. In some embodiments, optical filter **218** is uniform across the entire array of micro-optic receiver channels **212** so that each individual micro-optic receiver channel **212** in the array receives the same range of wavelengths of light.

In some embodiments, photosensors **216** are positioned on a side opposite of collimating lenses **214** so that light rays **206** first pass through collimating lenses **214** and optical filter **218** before exposing on photosensors **216**. Each photosensor **216** can be a plurality of photodetectors, such as a mini-array of multiple single-photon avalanche detectors (SPADs). An array of mini-arrays of SPADs can be fabricated on a single monolithic chip, thereby simplifying fabrication. In some alternative embodiments, each photosensor **216** can be a single photodetector, e.g., a standard photodiode, an avalanche photodiode, a resonant cavity photodiode, or another type of photodetector.

In some other embodiments, optical filter **218** is non-uniform. For example, a graduated filter allows different micro-optic channels to measure a different range of wavelengths. In other words, a graduated filter allows different micro-optic channels in an array of micro-optic channels to have different center wavelengths (CWL). A graduated filter typically gradually changes the range of allowed wavelengths in either one or two dimensions. However, a graduated filter could also encompass a filter where the range of allowed wavelengths changes rapidly (e.g., step-wise) in one or both dimensions. The different CWLs for the channels can be created in various ways. For instance, the thickness of the filter can change or the index of refraction can change. The index of refraction can be changed by modifying the filter layer, such as by altering its chemical composition, e.g., by modifying it to have a non-uniform doping concentration. As a result, each channel (or row/column of channels) can have an optical filter layer that has a different doping concentration, thereby resulting in a different CWL for each channel (or row/column of channels) without having a modified thickness. Rotating a one-dimensional array of micro-optic channels with a graduated optical filter allows the system to measure light at different wavelengths for each photosensor. Scanning a two-dimensional array of micro optic channels where the graduated filter is changing along the direction of the scan allows the passive optic imager system to measure light at multiple wavelengths for

each position in space, but uses multiple photodetectors in the photosensor to do so. Such optical systems using graduated filters require synchronization of the photosensor sampling so that different wavelength measurements are taken for the same photosensor with the same field-of-view. Imaging systems that differentiate between many different wavelengths are sometimes referred to as hyperspectral imagers. A hyperspectral imager often requires that light from the wavelengths of interest all be focused in approximately the same plane. This can be achieved by using an achromatic, apochromatic, superachromatic, or similar lens that is designed to limit the effects of chromatic aberration.

Hyperspectral imagers collect information from multiple wavelength bands across the electromagnetic spectrum. The absolute or relative intensities of the wavelength bands can provide information about chemical concentrations. For example, chlorophyll content of certain crops can be estimated using only a few wavelength bands. Similar techniques can be used to find valuable minerals or identify toxins. Spectral information can also be used to assist in the classification of pedestrians, automobiles, and other objects similarly encountered in an automotive environment.

A graduated neutral-density filter has a transmission that varies spatially across the filter, but the transmission is largely independent of wavelength (e.g. just as transmissive to red light as to blue light) at any given location. In a scanning imaging system, a graduated neutral-density filter can be used to image the same point in space with varying degrees of attenuation, thereby enabling a composite measurement with higher dynamic range than would achievable with a non-graduated filter. A better understanding of a micro-optic receiver layer with graduated filter can be achieved with reference to FIGS. **3**A and **3**B.

FIGS. **3**A and **3**B are perspective views of a simplified diagram of different embodiments of micro-optic receiver layers with graduated filter layers, according to some embodiments of the present disclosure. Specifically, FIG. **3**A is a perspective view of a simplified diagram of a micro-optic receiver layer **300** with a graduated filter layer **302**, and FIG. **3**B is a perspective view of a simplified diagram of a micro-optic receiver layer **301** with a graduated filter layer **312**. As illustrated in FIGS. **3**A and **3**B, micro-optic receiver layer **300** and **301** each includes four micro-optic receiver channels **304**, **306**, **308** and **310** arranged in two dimensions as a 2×2 array. Although FIGS. **3**A and **3**B illustrate embodiments having only 2×2 arrays, one skilled in the art understands that such embodiments are not limiting and that other embodiments can be configured to have any number of micro-optic receiver channels. It is to be appreciated that in these diagrams, the thicknesses of filter layers **302** and **312** and the thicknesses of the surrounding layers, which are not drawn to scale, should be interpreted as the thicknesses of layers of refractive material in an interference filter. As these thicknesses change, the characteristics (e.g. passband CWL) of the interference filter change. These embodiments can be used in a hyperspectral passive optic imager system.

As shown in FIGS. **3**A and **3**B, graduated filter layer **302** has gradually increasing thickness in one dimension across multiple columns of micro-optic receiver channels, and graduated filter layer **312** has a step-wise-increasing thickness in one dimension that has a constant thickness for each micro-optic receiver channel. Micro-optic receiver channels **304** and **308** have the same filter thickness and detect the same wavelength of light. Micro-optic receiver channels **306** and **310** have the same filter thickness and detect the same wavelength of light. Micro-optic receiver channels **304** and **308** can have a different filter thickness than micro-optic receiver channels **306** and **310** and thus detect a different wavelength of light. During a first-time interval, the micro-optic receiver channels **304** and **308** measure the intensity of a first wavelength of light for two pixels respectively. In some embodiments, the hyperspectral passive optic imager system moves or rotates the micro-optic receiver layer so that during a second-time interval, micro-optic receiver channels **306** and **310** measure the intensity of a second wavelength of light for the same two pixels respectively. In other embodiments, a hyperspectral passive optic imager system according to the disclosure can include a stationary micro-optic receiver layer and scan a moving target.

II. Active Optical Imager Systems

As discussed herein, optical imager systems can also be configured as active optical imager systems. Active optical imager systems can differ from passive optical imager systems in that active optical imager systems emit their own light into a field and detect the emitted light after it has reflected off surface(s) of an object in the field. In some embodiments, active optical imager systems can be utilized as LIDAR devices where emitted and received, reflected light can be correlated to determine a distance to the object from which the emitted light was reflected. A better understanding of an active optical imager system can be ascertained with reference to FIG. **4**.

FIG. **4** illustrates a block diagram of a LIDAR system **400** according to some embodiments of the present disclosure. LIDAR system **400** can include a light ranging device **402** and a user interface **415**. Light ranging device **402** can include a ranging system controller **404**, a light transmission (Tx) module **406** and a light sensing (Rx) module **408**. Ranging data can be generated by light ranging device **402** by transmitting one or more light pulses **410** from the light transmission module **406** to objects in a field of view surrounding light ranging device **402**. Reflected portions **412** of the transmitted light are then detected by light sensing module **408** after some delay time. Based on the delay time, the distance to the reflecting surface can be determined. Other ranging methods can be employed as well, e.g. continuous wave, Doppler, and the like.

Tx module **406** includes an emitter array **414**, which can be a one-dimensional or two-dimensional array of emitters, and a Tx optical system **416**, which when taken together with emitter array **414** can form a light emission system **438**. Tx optical system **416** can include a bulk transmitter optic that is image-space telecentric. In some embodiments, Tx optical system **416** can further include one or more micro-optic structures that increase the brightness of beams emanating from the bulk transmitter optic as discussed herein with respect to FIGS. **11**-**14** and/or for beam shaping, beam steering or the like. Emitter array **414** or the individual emitters can be laser sources. Tx module **406** can further include an optional processor **418** and memory **420**, although in some embodiments these computing resources can be incorporated into ranging system controller **404**. In some embodiments, a pulse coding technique can be used, e.g., Barker codes and the like. In such cases, memory **420** can store pulse-codes that indicate when light should be transmitted. In some embodiments, the pulse-codes are stored as a sequence of integers stored in memory.

Light sensing module **408** can be substantially similar in construction to light sensing module **106** discussed herein with respect to FIG. **1**. Thus, details of processor **422**, memory **424**, sensor array **426**, and Rx optical system **428** (when taken together with sensor array **426** can form a light detection system **436**) can be referenced herein with respect

to FIG. **1**, and only differences with respect to those components are discussed herein for brevity. For LIDAR system **400**, each photosensor sensor (e.g., a collection of SPADs) of sensor array **426** can correspond to a particular emitter of emitter array **414**, e.g., as a result of a geometrical configuration of light sensing module **408** and Tx module **406**. For example, in some embodiments, emitter array **414** can be arranged along the focal plane of the bulk transmitter optic such that each illuminating beam projected from the bulk transmitter optic into the field ahead of the system is substantially the same size and geometry as the field of view of a corresponding receiver channel at any distance from the system beyond an initial threshold distance.

In some embodiments, processor **418** can perform signal processing of the raw histograms from the individual photon detectors (or groups of detectors) in the array. As an example of signal processing, for each photon detector or grouping of photon detectors, memory **424** (e.g., SRAM) can accumulate counts of detected photons over successive time bins, and these time bins taken together can be used to recreate a time series of the reflected light pulse (i.e., a count of photons vs. time). This time-series of aggregated photon counts is referred to herein as an intensity histogram (or just histogram). Processor **418** can implement matched filters and peak detection processing to identify return signals in time. In addition, Processor **418** can accomplish certain signal processing techniques (e.g., by processor **422**), such as multi-profile matched filtering to help recover a photon time series that is less susceptible to pulse shape distortion that can occur due to SPAD saturation and quenching. In some embodiments, all or parts of such filtering can be performed by processor **458**, which may be embodied in an FPGA.

In some embodiments, the photon time series output from processor **418** are sent to ranging system controller **404** for further processing, e.g., the data can be encoded by one or more encoders of ranging system controller **404** and then sent as data packets to user interface **415**. Ranging system controller **404** can be realized in multiple ways including, e.g., by using a programmable logic device such an FPGA, as an ASIC or part of an ASIC, using a processor **430** with memory **432**, and some combination of the above. Ranging system controller **404** can cooperate with a stationary base controller or operate independently of the base controller (via pre-programmed instructions) to control light sensing module **408** by sending commands that include start and stop light detection and adjust photodetector parameters. Similarly, ranging system controller **404** can control light transmission module **406** by sending commands, or relaying commands from the base controller, that include start and stop light emission controls and controls that can adjust other light-emitter parameters (e.g., pulse codes). In some embodiments, ranging system controller **404** has one or more wired interfaces or connectors for exchanging data with light sensing module **408** and with light transmission module **406**. In other embodiments, ranging system controller **404** communicates with light sensing module **408** and light transmission module **406** over a wireless interconnect such as an optical communication link.

Light ranging device **402** can be used in both stationary and a scanning architectures. Electric motor **434** is an optional component in LIDAR system **400** that can be used to rotate system components, e.g., the Tx module **406** and Rx module **408**, as part of a scanning LIDAR architecture. The system controller **404** can control the electric motor **434** and can start rotation, stop rotation and vary the rotation speed as needed to implement a scanning LIDAR system. Exemplary stationary LIDAR devices are discussed below with respect to FIGS. **5**A and **5**B, while exemplary scanning LIDAR devices are discussed further herein with respect to FIGS. **6**A, **6**B, and **7**.

LIDAR system **400** can interact with one or more instantiations of a user interface **415**. The different instantiations can vary and can include, but not be limited to, a computer system with a monitor, keyboard, mouse, CPU and memory; a touch-screen in an automobile or other vehicle; a handheld device with a touch-screen; or any other appropriate user interface. User interface **415** can be local to the object upon which LIDAR system **400** is mounted but can also be a remotely operated system. For example, commands and data to/from LIDAR system **400** can be routed through a cellular network (LTE, etc.), a personal area network (Bluetooth, Zigbee, etc.), a local area network (WiFi, IR, etc.), or a wide area network such as the Internet.

User interface **415** of hardware and software can present the LIDAR data from the device to the user or to a vehicle control unit (not shown) but can also allow a user to control LIDAR system **400** with one or more commands. Example commands can include commands that activate or deactivate the LIDAR system, specify photodetector exposure level, bias, sampling duration and other operational parameters (e.g., emitted pulse patterns and signal processing), specify light emitters parameters such as brightness. In addition, commands can allow the user to select the method for displaying results. The user interface can display LIDAR system results which can include, e.g., a single frame snapshot image, a constantly updated video image, and/or a display of other light measurements for some or all pixels. In some embodiments, user interface **415** can track distances (proximity) of objects from the vehicle, and potentially provide alerts to a driver or provide such tracking information for analytics of a driver's performance.

In some embodiments, for example where LIDAR system **400** is used for vehicle navigation, user interface **415** can be a part of a vehicle control unit that receives output from, and otherwise communicates with light ranging device **402** and/or user interface **415** through a network, such as one of the wired or wireless networks described above. One or more parameters associated with control of a vehicle can be modified by the vehicle control unit based on the received LIDAR data. For example, in a fully autonomous vehicle, LIDAR system **400** can provide a real time 3D image of the environment surrounding the car to aid in navigation in conjunction with GPS and other data. In other cases, LIDAR system **400** can be employed as part of an advanced driver-assistance system (ADAS) or as part of a safety system that, e.g., can provide 3D image data to any number of different systems, e.g., adaptive cruise control, automatic parking, driver drowsiness monitoring, blind spot monitoring, collision avoidance systems, etc. When user interface **415** is implemented as part of a vehicle control unit, alerts can be provided to a driver or tracking of a proximity of an object can be tracked.

A. Solid State Architecture

LIDAR systems, according to some embodiments of the present disclosure, can be configured as a solid state LIDAR system that has a stationary architecture. Such LIDAR systems do not rotate, and thus do not need a separate motor, e.g., electric motor **434** in FIG. **4**, to rotate the sensor and transmitter modules. Example solid state LIDAR systems are shown in FIGS. **5**A and **5**B.

FIGS. **5**A and **5**B are simple illustrations of exemplary implementations of solid state LIDAR systems. Specifically, FIG. **5**A illustrates an implementation **500** where solid state LIDAR systems **502***a-d* are implemented at the outer

regions of a road vehicle **505**, such as an automobile, according to some embodiments of the present disclosure; and FIG. **5**B illustrates an implementation **501** where solid state LIDAR systems **504***a-b* are implemented on top of road vehicle **505**, according to some embodiments of the present disclosure. In each implementation, the number of LIDAR systems, the placement of the LIDAR systems, and the fields of view of each LIDAR system can be chosen to obtain a majority of, if not the entirety of, a 360 degree field of view of the environment surrounding the vehicle. Automotive implementations for the LIDAR systems are chosen herein merely for the sake of illustration and the sensors described herein may be employed in other types of vehicles, e.g., boats, aircraft, trains, etc., as well as in a variety of other applications where 3D depth images are useful, such as medical imaging, mobile phones, augmented reality, geodesy, geomatics, archaeology, geography, geology, geomorphology, seismology, forestry, atmospheric physics, laser guidance, airborne laser swath mapping (ALSM), and laser altimetry.

With reference to FIG. **5**A, solid state LIDAR systems **502***a-d* can be mounted at the outer regions of a vehicle, near the front and back fenders. LIDAR systems **502***a-d* can each be positioned at a respective corner of vehicle **505** so that they are positioned near the outermost corners of vehicle **505**. That way, LIDAR systems **502***a-d* can better measure the distance of vehicle **505** from objects in the field at areas **506***a-d*. Each solid state LIDAR system can face a different direction (possibly with partially and/or non-overlapping fields of views between units) so as to capture a composite field of view that is larger than each unit is capable of capturing on its own. Objects within the scene can reflect portions of light pulses **510** that are emitted from LIDAR Tx module **508**. One or more reflected portions **512** of light pulses **510** then travel back to LIDAR system **502***a* and can be received by Rx module **509**. Rx module **509** can be disposed in the same housing as Tx module **508**.

Although FIG. **5**A illustrates four solid state LIDAR systems mounted at the four corners of a vehicle, embodiments are not limited to such configurations. Other embodiments can have fewer or more solid state LIDAR systems mounted on other regions of a vehicle. For instance, LIDAR systems can be mounted on a roof of a vehicle **505**, as shown in FIG. **5**B. In such embodiments, LIDAR systems can have a higher vantage point to better observe areas **506***a-d* around vehicle **505**.

B. Scanning Architecture

In some embodiments, LIDAR systems according to the present disclosure can employ a scanning architecture in which the LIDAR system oscillates between an angle that is less than 360 degrees. For instance, LIDAR systems **504***a-b* in implementation **501** of FIG. **5**B can each employ a scanning architecture to scan the entire scene in front of, and/or behind, vehicle **505**, e.g., in area **514** between field of view **506***a* and **506***b* and in area **516** between field of view **506***c* and **506***d*. The output beam(s) of one or more light sources (not shown, but can be a variety of different suitable sources for emitting radiation including, but not limited to lasers, in any wavelength spectrum suitable for LIDAR systems, such as in the infrared, near-infrared, ultraviolet, visible, e.g., green laser wavelength spectrum, and the like) located in the scanning LIDAR systems, can be outputted as pulses of light and scanned, e.g., rotated between an angle that is less than 360 degrees, to illuminate a scene around the vehicle. In some embodiments, the scanning, represented by rotation arrows **514** and **516**, can be implemented by mechanical means, e.g., by mounting the light emitters to a rotating column or platform or through the use of other mechanical means, such as galvanometers. Chip-based beam steering techniques can also be employed, e.g., by using microchips that employ one or more MEMS based reflectors, e.g., such as a digital micromirror (DMD) device, a digital light processing (DLP) device, and the like. In some embodiments, the scanning can be effectuated through non-mechanical means, e.g., by using electronic signals to steer one or more optical phased arrays.

Other embodiments can implement a scanning architecture that scans through the entire 360 degrees of the environment surrounding a vehicle. Such scanning LIDAR systems can repetitively rotate continuously through 360 degrees in a clockwise or counter-clockwise direction, and thus may utilize a separate motor, e.g., electric motor **434** in FIG. **4**, to rotate the sensor and transmitter modules. Exemplary rotating LIDAR systems are shown in FIGS. **6**A and **6**B.

FIG. **6**A is a top-down view of a simplified diagram of an exemplary scanning LIDAR system **600** implemented for a vehicle **605**, such as a car, and capable of continuous 360 degree scanning, according to some embodiments of the present disclosure. The output beam(s) of one or more light sources (such as infrared or near-infrared pulsed IR lasers, not shown) located in LIDAR system **600**, can be scanned, e.g., rotated, to illuminate a continuous scene **620** around the vehicle. In some embodiments, the scanning, represented by rotation arrow **615**, can be implemented by any suitable mechanical means discussed herein with respect to FIG. **5**B, e.g., by mounting the light emitters to a rotating column or platform, or any other mechanical means, such as through the use of galvanometers or chip-based steering techniques. During operation, objects around vehicle **605** in any direction and within the view of LIDAR system **600** can reflect portions of light pulses **611** that are emitted from a transmitting module **608** in LIDAR system **600**. One or more reflected portions **617** of light pulses **611** then travel back to LIDAR system **600** and can be detected by its sensing module **609**. In some instances, sensing module **609** can be disposed in the same housing as transmitting module **608**.

Although FIG. **6**A illustrates solid state LIDAR systems mounted on a roof of a vehicle **605**, embodiments are not limited to such configurations. Other embodiments can have solid state LIDAR systems mounted on other regions of a vehicle. For instance, LIDAR systems can be mounted at the corners of a vehicle, as shown in FIG. **6**B. FIG. **6**B illustrates an implementation **601** where solid state LIDAR systems **604***a-d* are implemented at the outer regions of a road vehicle, such as a car, according to some embodiments of the present disclosure. In this implementation, each LIDAR system **604***a-d* can be a spinning LIDAR system that can measure distances around the full 360 degrees. However, since at least some of those measurements will be measured with respect to vehicle **605**, those measurements can be ignored. Thus, each LIDAR system **605***a-d* can only utilize a subset of the measurements from 360 degree scanning, e.g., only the angles covering regions **619***a-d* that do not capture vehicle **605** are utilized.

FIG. **7** is a simplified exemplary perspective view of a LIDAR system **700** that employs a 360 scanning architecture, according to some embodiments of the present disclosure. In some embodiments, LIDAR system **700** can include a light ranging device **701** that spins in a clockwise or counter-clockwise direction to observe the surrounding field around a vehicle. System **700** can include a stationary housing **702**, an optically transparent window **704**, and a stationary lid **706** for providing protection for the internal

components of LIDAR system **700**. Window **704** can extend fully around a periphery of stationary housing **702**, which can be configured to have a cylindrical shape. The internal components of system **700** can include light ranging device **701**, which can include a rotating platform **708** and sensing and transmitting modules **710** mounted on rotating platform **708**. In some embodiments, light ranging device **701** is aligned with window **704** such that modules **710** are positioned to emit and receive light through window **704**, and that emitted light is not emitted onto stationary housing **702** or stationary lid **706**. For instance, in the aligned positioned, the horizontal center of light ranging device **701** coincides with the horizontal center of window **704**. Sensing and transmitting modules **710** can be, for example, light sensing module **408** and light transmission module **406**, and can optionally include a heat sink (not shown) to cool the micro-optic layers. LIDAR system **700** can also include a system controller **712** (e.g., controller **404**) and electric motor **714** (e.g., motor **434**) that reside within stationary housing **702**. Electric motor **714** rotates platform **708**, thereby rotating sensing and transmitting modules **710** in a spinning manner, e.g., continuously through 360 degrees in a clockwise or counter-clockwise direction. System controller **712** can communicate with sensing and transmitting modules **710** using an optical communication link **716**. Optical communication link **716** allows sensing and transmitting modules **710** to communicate with stationary system controller **712**, which is mechanically coupled to stationary housing **702** and does not rotate with platform **708**, through optical communication link **716** without mechanical wear and tear. In some embodiments, system controller **712** can control the motor and to start and stop light detection operations of LIDAR system **700**. System controller **712** can include two or more stacked planar circuit boards arranged in a parallel relationship, which is discussed in more detail in commonly-owned and concurrently-filed patent application entitled "Compact Lidar System", which is herein incorporated by reference in its entirety for all purposes.

III. Operation of Active Imager Systems

FIG. **8** is an illustrative example of the light transmission and detection operation for a light ranging system according to some embodiments. FIG. **8** shows a light ranging system **800** (e.g., solid state or and/or scanning system) collecting three-dimensional distance data of a volume or scene that surrounds the system. FIG. **8** is an idealized drawing to highlight relationships between emitters and sensors, and thus other components are not shown.

Light ranging system **800** includes a light emitter array **810** and a light sensor array **820**. The light emitter array **810** includes an array of light emitters, e.g., an array of vertical-cavity surface-emitting lasers (VCSELs) and the like, such as emitter **812** and emitter **816**. Light sensor array **820** includes an array of photosensors, e.g., sensors **822** and **826**. The photosensors can be pixelated light sensors that employ, for each photosensor, a set of discrete photodetectors such as single photon avalanche diodes (SPADs) and the like. However, various embodiments can deploy other types of photon sensors.

Each emitter can be slightly offset from its neighbor and can be configured to transmit light pulses into a different field of view from its neighboring emitters, thereby illuminating a respective field of view associated with only that emitter. For example, emitter **812** emits an illuminating beam **814** (formed from one or more light pulses) into the circular field of view **832** (the size of which is exaggerated for the sake of clarity). Likewise, emitter **816** emits an illuminating beam **818** (also called an emitter channel) into the circular field of view **834**. While not shown in FIG. **8** to avoid complication, each emitter emits a corresponding illuminating beam into its corresponding field of view resulting in a 2D array of fields of view being illuminated (21 distinct fields of view in this example).

Each field of view that is illuminated by an emitter can be thought of as a pixel or spot in the corresponding 3D image that is produced from the ranging data. Each emitter channel can be distinct to each emitter and be non-overlapping with other emitter channels, i.e., there is a one-to-one mapping between the set of emitters and the set of non-overlapping fields or view. Thus, in the example of FIG. **8**, the system can sample 21 distinct points in the 3D space. A denser sampling of points can be achieved by having a denser array of emitters or by scanning angular position of the emitter beams over time such that one emitter can sample several points in space. As described above, scanning can be accomplished by rotating the entire emitter/sensor assembly.

Each sensor can be slightly offset from its neighbor and, like the emitters described above, each sensor can see a different field of view of the scene in front of the sensor. Furthermore, each sensor's field of view substantially coincides with, e.g., overlaps with and is the same size as a respective emitter channel's field of view.

In FIG. **8**, the distance between corresponding emitter-receiver channels is exaggerated relative to the distance to objects in the field of view. In practice, the distance to the objects in the field of few is much greater than the distance between corresponding emitter-receiver channels and thus the path of light from the emitter to the object is approximately parallel to the path of the reflected light back from the object to the sensor (i.e., it is almost "back reflected"). Accordingly, there is a range of distances in front of the system **800** over which the fields of view of individual sensors and emitters are overlapped.

Because the fields of view of the emitters are overlapped with the fields of view of their respective sensors, each receiver channel ideally can detect the reflected illumination beam that originates from its respective emitter channel with ideally no cross-talk, i.e., no reflected light from other illuminating beams is detected. Thus, each photosensor can correspond to a respective light source. For example, emitter **812** emits an illuminating beam **814** into the circular field of view **832** and some of the illuminating beam reflects from the object **830**. Ideally, a reflected beam **824** is detected by sensor **822** only. Thus, emitter **812** and sensor **822** share the same field of view, e.g., field of view **832**, and form an emitter-sensor pair. Likewise, emitter **816** and sensor **826** form an emitter-sensor pair, sharing field of view **834**. While the emitter-sensor pairs are shown in FIG. **8** as being in the same relative locations in their respective array, any emitter can be paired with any sensor depending on the design of the optics used in the system.

During a ranging measurement, the reflected light from the different fields of view distributed around the volume surrounding the LIDAR system is collected by the various sensors and processed, resulting in range information for any objects in each respective field of view. As described above, a time-of-flight technique can be used in which the light emitters emit precisely timed pulses, and the reflections of the pulses are detected by the respective sensors after some elapsed time. The elapsed time between emission and detection and the known speed of light is then used to compute the distance to the reflecting surface. In some embodiments, additional information can be obtained by the sensor to determine other properties of the reflecting surface in addition to the range. For example, the Doppler shift of a

pulse can be measured by the sensor and used to compute the relative velocity between the sensor and the reflecting surface. The pulse strength can be used to estimate the target reflectivity, and the pulse shape can be used to determine if the target is a hard or diffuse material.

In some embodiments, the LIDAR system can be composed of a relatively large 2D array of emitter and receiver channels and operate as a solid state LIDAR, i.e., it can obtain frames of range data without the need to scan the orientation of the emitters and/or sensors. In other embodiments, the emitters and sensors can be scanned, e.g., rotated about an axis, to ensure that the fields of view of the sets of emitters and sensors sample a full 360 degree region (or some useful fraction of the 360 degree region) of the surrounding volume. The range data collected from the scanning system, e.g., over some predefined time period, can then be post-processed into one or more frames of data that can then be further processed into one or more depth images or 3D point clouds. The depth images and/or 3D point clouds can be further processed into map tiles for use in 3D mapping and navigation applications.

According to some embodiments, a light ranging system (also called a coded-pulse optical receiver system) can transmit multiple pulses of light. In some embodiments, each coded-pulse has an embedded positive-valued pulse-code formed by the light intensity. The system can determine the temporal position and/or amplitude of optical pulses in the presence of background light by creating an intensity histogram of detected, reflected light at different time bins. For each time bin, the system adds a weighted value to the intensity histogram that depends on the intensity of detected light. The weighted values can be positive or negative and have varying magnitudes.

By selecting different combinations of positive-valued pulse-codes and applying different weights, the system can detect positive-valued and negative-valued codes suitable for standard digital signal processing algorithms. This approach gives a high signal-to-noise ratio while maintaining a low uncertainty in the measured temporal position of the reflected light pulses.

FIG. **9** is a flowchart illustrating a method **900** of using coded pulses in an optical measurement system according to embodiments of the present disclosure. The optical measurement system may be a light ranging system. Method **900** can detect the temporal position of a reflected pulse from a target using multiple coded-pulses. In a real-time three-dimensional application, method **900** can constantly detect distances to objects in the surrounding environment. Method **900** may be implemented by any of the optical measurement systems described herein.

At **910**, a coded-pulse optical system (CPOS) performs an initialization. For example, the CPOS can respond to user interface commands for starting, stopping, and changing parameters. The CPOS can initialize an optical transmitter to indicate parameters, e.g., pulse-codes, light power level, and various time intervals (e.g., for a detection interval, an interval for pausing between detection intervals, and an overall measurement time interval). The CPOS can initialize a light sensing module to indicate parameters such as pulse-time-interval and light-sampling-interval. The CPOS can also clear histogram values.

At **920**, a pulse train is transmitted from a light source (e.g., a laser) as part of an optical measurement. The pulse train can be transmitted as part of N pulse trains transmitted for the measurement. The N pulse trains can reflect from an object, thereby allowing a ranging measurement to the object. Each of the N pulse trains can include one or more pulses from the light source (e.g., VCSELs) and correspond to a different time interval that is triggered by a start signal.

In some embodiments, the CPOS can wait for a specified time to allow a previous pulse train (coded-pulse transmission) to dissipate. The CPOS can then transmit a next pulse train of the N pulse trains of a measurement, where the N pulse trains form a code. Once a measurement is complete, e.g., a last of the N pulse train has dissipated (e.g., after a predetermined time expected for any reflections), the CPOS can then start the first/next coded-pulse transmission using the appropriate pulse-code. N can be an integer greater than one, e.g., 2, 3, 4, 5, or higher.

At **930**, optical detection can be started, e.g., in response to the start signal that triggers the pulse train to be transmitted. Thus, the CPOS can start light detection at the same time that it started coded-pulse transmission. As part of the optical detection, a pulse train can be detected by a photosensor (e.g., corresponding to a pixel) of the optical measurement system, thereby generating data values at a plurality of time points. In some embodiments, the photosensor is a collection of photodetectors (e.g., SPADs). The data values may be of various forms, e.g., counts of a number of SPADs that triggered at a time point (e.g., within a time bin of a histogram). As other examples, the data values can be a digitized value from an ADC that follows an analog photosensor (e.g., an APD). Both examples can correspond to an intensity. In total, N pulse trains can be detected. Further, the process can be performed separately for each photosensor of the optical measurement device.

At **940**, a weight is assigned to the data values at time points within the time interval corresponding to the pulse train, thereby obtaining weighted values. A weight can be assigned for each of the N pulse trains. Some of such weights for different pulse trains can be the same as other pulse trains. In some embodiments, at least two of the N pulse trains are assigned different weights and have a different pulse pattern. Two pulse trains can have some similarity (e.g., portions of pulses can overlap), but there is at least some times where one pulse train is ON and the other pulse train is OFF. Such different pulse patterns can have a similar shape but have a different delay, e.g., {1, 0, 1, 1, 0} has a similar shape of non-zero values to {0, 1, 0, 1, 1}, but they are different pulse patterns due to an offset as may be achieved by a delay in the second signal relative to the first signal.

Accordingly, the CPOS can detect light and create a digitized intensity value for each light-sampling-interval. For each light-sampling-interval, the CPOS can apply a pulse-weight to the digitized intensity value and add the result to the appropriate time-bin of the intensity histogram.

At **950**, the CPOS tests if it has sent the required number of coded-pulses. If the CPOS has sent the required number of coded-pulses it continues at block **960**, otherwise it loops back to block **920**.

At **960**, a histogram corresponding to the weighted values in a plurality of time bins is determined. As described above, a counter of the histogram at a particular time bin can be determined by accumulating the weighted values at time points within the particular time bin across a plurality of time intervals.

At **970**, the histogram is used to detect a signal corresponding to the N pulse trains. For example, the CPOS can determine whether the histogram has a sequence of values that match the match-code (filter). The CPOS can report whether the match-code was found and the amplitude of the match. The match may allow detection of the desired signal relative to noise or interference from other light sources.

As an example, a filter can include a set of values to be applied to a window of time bins of a histogram. The filter can be slid over the histogram to calculate a filtered histogram having counters corresponding to different sliding positions of the profile filter relative to the histogram. Each of the counters of the filtered histogram can correspond to an overlap of the profile filter and the histogram at a particular sliding position. A maximum value of the counters of the filtered histogram can be identified, thereby allowing detection, e.g., when the maximum value is above a threshold. The particular sliding position for the maximum value of the counters can correspond to the received time, which may be used for ranging measurements.

In some embodiments, the signal may be a reflected signal caused by the N pulse trains reflecting from an object, e.g., when the optical measurement system is configured to perform ranging measurements. In other embodiments, the signal may be a communication signal, e.g., when the light source is at one location and the photosensors are at a different location. Such a configuration can be used for communication purposes. For example, a microwave transmission tower can transmit data to a receiving tower. The transmitted data can include coded pulses, which may help to reduce errors in data reception as may be caused by noise or interference from other sources. The receiving tower can identify pulse trains and create a histogram by selecting an arbitrary time between two pulse trains as a start time for a first time bin. A match filter can then be applied (e.g., by sliding over the histogram); and if a sufficient match is found, then that communication signal can be detected. A sufficient match can be measured by the maximum value obtained the filtered histogram. As a further embodiment, the system can detect an interference signal from another CPOS in a similar manner used to detect the communication signal. If interference is measured, some implementations can change the transmitted code, e.g., of the interference code is similar to the code currently being used.

At **980**, a distance to the object can be determined. For example, a received time corresponding to the N pulse trains relative to the start signal can be determined. A distance to the object can be determined using the received time. The received time may be offset from the transmission times of the pulse trains, but such an offset can be taken into account. Accordingly, the CPOS can report the time at which it was detected. The distance can corresponds to a round trip time between the received time and a start time of the start signal, and thus the distance may be expressed in time.

The detected signal can be used for other purposes than ranging. For example, the quality of the detected signal can be used to measure the reflectivity of an object. For example, if the detected signal has a strong intensity, then the system can determine that the object has a high reflectivity. Implementations for communications and interference measurements are discussed above. For detection of interference from another light source, the detected signal would be from another set of pulse trains transmitted by the interfering light source.

As a generalization, embodiments can transmit N+1 unique codes with N+1 unique weights to generate an N dimensional vector space histogram. For example, instead of a bin holding a signed number, the bin can hold a 1-D vector (e.g., equivalent to a signed number), by transmitting at least two unique codes: one positive and one negative. To store a 2-D vector (e.g., in polar or Cartesian coordinates), the system can transmit at least three unique codes, which could be weighted with three different polar angles and sum to a single 2-D vector. An N-D vector (defined with N separate numbers all held within a single "bin") would require N+1 different codes, each weighted at a different angle (in other worlds having a component to its weight that is orthogonal to all other weights) when doing the vector summation. By increasing the dimensionality, more advanced coding techniques like quadrature phase coding or code division multiple access (CDMA) that are used in RF communications may be used. An N-dimensional matched filter can be used in this context.

As a LIDAR system implements method **900** during its operation, the LIDAR system can continuously measure distances to objects in the field. Accordingly, once the distance to an object is determined, method **900** can loop back to block **920** to begin another series of emitting pulse trains and detecting the emitted pulse trains to determine a histogram for determining a distance to an object in the field. Distances may need to be constantly measured by method **900** because the LIDAR system may need to be constantly measuring distances to objects in the field, such as when the LIDAR system is used for navigational purposes and the LIDAR system is moving within the field.

In some embodiments, after determining the distance to the object at block **980**, method **900** can determine whether an exit command has been received by CPOS at block **990**. If an exit command has been received, then method **900** can stop measuring distances at block **999**, otherwise method **900** can continue measuring distances to objects by looping back to block **920**.

As mentioned above, method **900** can be used to reduce interference among channels. For example, method **900** can be repeated for a plurality of channels of light sources and photosensors as part of a plurality of optical measurements. The plurality of optical measurements can overlap in time, e.g., performed substantially simultaneously. Thus, each channel can perform a measurement at the same time. To reduce interference, the codes can be different for at least some of the channels. For example, the pulse patterns of the N pulse trains of at least two channels of the plurality of channels can be different, thereby causing different histogram patterns for different channels. In addition or instead, the weights assigned to the N pulse trains of at least two channels of the plurality of channels can be different, thereby causing different histogram patterns for different channels.

IV. Construction of Active Imager Systems

FIG. **10** is a simplified diagram illustrating a detailed view of an exemplary active optical imager system **1000** having a wide field-of-view and capable of narrowband imaging, according to some embodiments of the present disclosure. Active optical imager system **1000** can employ solid state or scanning architectures as aforementioned herein. In some embodiments, active optical imager system **1000** can include a light detection system **1001** and a light emission system **1002**, which is unlike passive optical imager systems. Light emission system **1002** provides active illumination of at least a portion of a field in which system **1000** is positioned with narrowband light rays **1004**. Light detection system **1001** detects the narrowband light emitted from the light emission system **1002** after it has been reflected by objects in the field as reflected light rays **1006**. Light detection system **1001** can be substantially similar to light detection system **200** discussed herein with respect to FIG. **2**. Thus, details of bulk receiver optic **1008**, light cone **1010**, micro-optic receiver channel **1012** in micro-optic receiver layer **1014**, and photodetectors **1016** can be referenced herein with respect to FIG. **2**, and are not discussed herein for brevity.

In some embodiments, light emission system **1002** includes a bulk transmitter optic **1018** and a light emitting layer **1020** formed of a one- or two-dimensional array of light emitters **1022**. Each light emitter **1022** can be configured to generate discrete beams of narrowband light. In some embodiments, light emitting layer **1020** is configured to selectively project the discrete beams of light through bulk transmitter optic **1018** according to an illumination pattern that matches, in size and geometry across a range of distances from light emission system **1002**, the fields of view of the receiver channels in micro-optic receiver channel array **1014**. Light emitters **1022** can be any suitable light emitting device, such as a vertical-cavity surface-emitting lasers (VCSELS) integrated on one or more monolithic chip, or any other type of laser diode. Light emitters **1022** can produce cones of narrowband light **1024** that are directed to bulk transmitter optic **1018**, which can collimate cones of light **1024** and then output the collimated light to distant targets in the field as emitted light rays **1004**. In some embodiments, bulk transmitter optic **1018** is image-space telecentric.

In additional and alternative embodiments, light rays **1004** from light cones **1024** are focused on an intermediate plane in space by a micro-optic transmitter layer (not shown) before being directed to distant targets by the bulk transmitter optic **1018** to enhance the brightness and intensity of light emitted from light emission system **1002**. In such embodiments, embodiments, light emission system **1002** and light detection system **1001** are configured such that each micro-optic transmitter channel (not shown) is paired with a corresponding micro-optic receiver channel **1012** and the centers of their fields-of-view are aligned to be overlapping at a certain distance from the sensor or their chief rays are made parallel. In further additional and alternative embodiments, the far-field beams of light emitted by light emission system **1002** are of similar size and divergence angle to the far-field fields-of-view of each micro-optic receiver channel **1012**. Details of light emission systems **1002** having the micro-optic transmitter layer for enhancing brightness and intensity of outputted light will be discussed in detail below.

As is evident from the illustration of parallel light rays **1004** and **1006** in FIG. **10**, each micro-optic receiver channel **1012** has a non-overlapping field of view beyond a threshold distance. As shown in FIG. **10**, each micro-optic receiver channel **1012** includes an aperture from the plurality of apertures, a lens from the plurality of lenses, and a photodetector from the plurality of photodetectors, where the aperture of each channel defines a discrete field of view for the pixel in the channel that is non-overlapping beyond a threshold distance within the fields of view of the other micro-optic receiver channels. That way, each micro-optic receiver channel receives reflected light corresponding to a discrete position in the field that is not measured by any other micro-optic receiver channel in micro-optic receiver channel layer **1014**.

A. Enhancing Brightness and Intensity of Transmitters in Active Imager Systems

Embodiments of the present disclosure pertain to a LIDAR sensor that can, among other uses, be used for obstacle detection and avoidance in autonomous vehicles. Some specific embodiments pertain to LIDAR sensors that include design features that enable the sensors to be manufactured cheaply enough and with sufficient reliability and to have a small enough footprint to be adopted for use in mass-market automobiles, trucks and other vehicles. For example, some embodiments include a set of vertical-cavity surface-emitting lasers (VCSELs) as illumination sources that emit radiation into a field and include arrays of single-photon avalanche diode (SPAD) detectors as a set of photosensors (detectors) that detect radiation reflected back from a surface in the field. Using VCSELs as the emitters and SPADs as the detectors enables multiple measurements to be taken at the same time (i.e., the VCSEL emitters can be fired simultaneously) and also enables the set of emitters and the set of photosensors to each be fabricated using standard CMOS processes on a single chip, greatly simplifying the manufacturing and assembly process.

Using VCSELs and SPADs in certain embodiments presents challenges, however, that various embodiments of the present disclosure overcome. For example, VCSELs are much less powerful than typical lasers used in existing LIDAR architectures and SPADs are much less efficient than the typical detectors used in the existing LIDAR architectures. To address these challenges, as well as challenges presented by firing multiple emitters simultaneously, certain embodiments of the disclosure include various optical components (e.g., lenses, filters, and an aperture layer), which may work in concert with multiple arrays of SPADs, each array corresponding to a different pixel (e.g., position in the field), as described herein. For example, as discussed herein with respect to FIG. **2**, a light detection system **200** can include a micro-optic receiver layer **204** for enhancing the light detected by photosensors **216**, e.g., SPADs.

Because VCSELs are less powerful than typical lasers in existing LIDAR architectures, in some embodiments, light emission system **1002** can be configured to improve the ability of imager system **1000** to perform light ranging functionality. That is, the quality of light emitted by light emission system **1002** can be enhanced to improve light ranging accuracy and efficiency. The quality of transmitted light for light ranging and imaging purposes can be defined in terms of brightness and intensity. The brightness and intensity of light rays **1004** emitted from bulk transmitter optic **1018** can be enhanced by modifying and/or implementing one or more optic transmitter layers, as will be discussed further herein.

Brightness of a transmitting light can be defined by the optical power (in watts) per solid angle. Thus, light sources that output light with tight collimation, i.e., low divergence, produce light that are high in brightness. Conversely, light sources that output light with high divergence produce light that are low in brightness. Intensity of light can be defined by the optical power per area, meaning light emitted with a certain power will have higher intensity if it tightly compacted in a small area. Accordingly, light sources that output light in a tightly compacted ray will have higher intensity than light sources that output light in a less compacted ray, even if both light sources output light that has low divergence. As will be appreciated herein, transmitter components for LIDAR systems in embodiments of the present disclosure can be configured with micro-optical components that enable the transmitter to output light that has enhanced brightness and intensity as compared to a similar transmitter without the micro-optical components.

FIG. **11** is a simplified cross-sectional view diagram of a first exemplary enhanced light emission system **1100**, according to some embodiments of the present disclosure. Light emission system **1100** can include a light emitter array **1102** having light emitters **1104** that for example may comprise without limitation any of LEDs, laser diodes, VCSELs, or the like for emitting light **1113**. A VCSEL is a type of semiconductor laser diode with laser beam emission perpendicular from the top surface. Note that the linear array

shown in FIG. **11** can be any geometric form of emitter array, including and without limitation circular, rectangular, linear, or any other geometric shape.

Enhanced light emission system **1100** can include a micro-optic transmitter channel array **1106** separated from light emitter array **1102** by an open space **1118**. Each micro-optic transmitter channel **1108** is paired with a corresponding receiver channel (e.g., receiver channel **1012** in FIG. **10**) and the centers of their fields-of-view are aligned to be overlapping at a certain distance from the optical imager system. Micro-optic transmitter channel array **1106** can be formed of a substrate **1119** sandwiched between a first optical surface **1120** positioned on a side facing light emitter array **1102** and a second optical surface **1121** positioned on an opposite side facing away from light emitter array **1102**. Both first and second optical surfaces **1120** and **1121** can each be configured as an array of convex, micro-optic lenses where each convex lens of first optical surface **1120** is configured to be optically aligned with a respective convex lenses of second optical surface **1120** so that light transmitting through first optical surface **1120** can subsequently be transmitted through second optical surface **1121**. The corresponding convex lenses from first and second optical surfaces **1120** and **1121** can face away from one another as shown in FIG. **11**. In certain embodiments, convex lenses of first optical surface **1120** have a first optical power and convex lenses of second optical surface **1121** have a second optical power different from the first optical power. For instance, the second optical power can be greater than the first optical power such that the focal length of the second optical power is shorter than the focal length of the first optical power. Substrate **1119** can be formed of any suitable material that is transmissive in the wavelength range of the light emitters **1104** such silicon, silicon dioxide, borosilicate glass, polymer, and the like. First and second optical surfaces **1120** and **1121** can be formed of a transparent polymer that is imprinted on respective opposite surfaces of substrate **1119**.

In some embodiments, micro-optic transmitter channel array **1106** can be formed of a monolithic array of micro-optic transmitter channels **1108**. Each micro-optic transmitter channel **1108** can include a first convex lens from first optical surface **1120**, a corresponding second convex lens from second optical surface **1121**, and a corresponding portion of substrate **1119** positioned between the two convex lenses. Each micro-optic transmitter channel **1108** can correspond with a respective light emitter **1104** so that light outputted from the light emitter **1104** first passes through the first convex lens, through the corresponding region of substrate **1119**, and then through the second convex lens during operation.

Once light emits out of the second convex lens of second optical surface **1121**, the light forms a miniature spot image **1110** that is a real image of the corresponding light emitter **1104** but a reduced-size of the corresponding light emitter **1104**. In some embodiments, miniature spot images **1110** are positioned between micro-optic transmitter channel array **1106** and bulk transmitter optic **1114**. For instance, miniature spot images **1110** can be formed within respective apertures of an aperture layer **1109**. Each aperture can be a pin hole in a reflective or opaque layer in which emitted light focuses to form miniature spot images **1110**. From there, continuing away from both the light emitter and micro optic channel, the light forms a light cone **1112** reaching out towards bulk transmitter optic **1114**.

According to some embodiments of the present disclosure, the degree of divergence of emitted light **1113** can be smaller than the degree of divergence of light cone **1112**. This discrepancy in divergence can be created by a micro-optic transmitter channel **1108**, specifically by the optical power of second optical surface **1121**. Because the divergence of light out of micro-optic transmitter channel **1108** is larger than the divergence of emitted light **1113** from light emitters **1104**, miniature spot image **1110** can be a real image of light emitter **1104** but a multitude smaller than the size of light emitter **1104** and with the same number of photons as emitted light **1113**. The resulting light cone **1112** formed after the real spot images are formed then gets projected into the field as discrete beams of light for each light emitter **1104** after passing through bulk transmitter optic **1114**. The resulting light rays emanating out of light emission system **1100** are highly collimated beams of light that have a small cross-sectional area (smaller than the surface area of light emitter **1104**), thereby resulting in a light emission system **1100** that can output light having enhanced brightness and intensity.

Note that bulk transmitter optic **1114** can include either a single lens or a cluster of lenses where two or more lenses function together to form bulk transmitter optic **1114**. The use of multiple lenses within the bulk transmitter optic **1114** could increase the numerical aperture, reduce the RMS spot size, flatten the image plane, improve the telocentricity, or otherwise improve the performance of bulk transmitter optic **1114**. Note also that for some embodiments, light cones **1112** may overlap forming cone overlap region **1116**.

To better understand the operation and effectiveness of micro-optic transmitter channel array **1106**, a more detailed explanation of the operation of light emission system **1100** is discussed. For enhanced light emission systems **1100** utilizing a light emitter array formed of VCSEL emitters, an exemplary initial radius for an emitter might be 12.5 um with light admitted in a 10° half angle cone. Such emitters would typically output 50 uW per square micron of active area. A diverging light cone from each emitter **1104** is accepted into a micro-optic transmitter channel **1108**, and then a converging light cone is output by that same micro optic channel to produce a converging light cone with a half angle of for example 20°. Thus for some embodiments, the cone angle produced by an emitter **1104** is smaller than the cone angle produced by a corresponding micro-optic transmitter channel **1108**. The converging light cone emanated by micro-optic transmitter channel **1108** then produces a miniature spot image **1110** of the emitter. For the embodiment according to FIG. **11**, miniature spot image **1110** is a real image and has a size that is smaller than the size of a corresponding light emitter **1104**. Note that all rays from a given emitter may not all be focused into an arbitrarily small spot. The miniature spot image size is typically controlled by an "optical invariant":

$$\Theta_s*r_s>=\Theta_e*r_e$$

where Θ_s is the marginal ray half angle of the focused spot, r_s is the radius of the focused spot, Θ_e is the marginal ray half angle of the original emitter, and r_e is the radius of the original emitter. So, in this example, the smallest miniature spot image radius that could be formed (while still capturing all the rays from the emitter) is:

$$10/20*12.5\text{ um}=6.25\text{ um}$$

Note that this smaller spot will have one fourth the area of the original emitter, and thus has a power density of 200 uW per square micron of spot area. Each micro-optic transmitter channel **1108** typically has one or more optical surfaces, having characteristics that may for example and

without limitation include a focal length of 50 um, and a lens diameter of 80 um. For some embodiments, the distance between light emitter **1104** and a corresponding micro-optic transmitter channel **1108** may be for example and without limitation 150 um. Open space **1118** between emitter array **1102** and micro-optic transmitter channel array **1106** as shown in FIG. **11** may be, for example and without limitation an air gap such as that produced by methods typically used to manufacture MEMS devices. The distance between emitter array **1102** and micro-optic transmitter channel array **1106** for example may be 150 um.

Bulk transmitter optic **1114** is positioned in front of the micro-optic and emitting layers such that the focal plane of the bulk imaging optic coincides with miniaturized spot images **1110**. Bulk transmitter optic **1114** accepts divergent light cone(s) **1112** and outputs a collimated beam. Its numeric aperture can be at least large enough to capture the full range of angles in the divergent ray cone(s), so for example and without limitation the Numerical Aperture (NA)=0.34 in this example. Also, bulk transmitter optic **1114** can be image-space telecentric, since light cone(s) **1112** exiting the micro-optic layer may all be parallel (rather than having their center axes aimed towards the center of the bulk optic). In one embodiment, light can exit bulk transmitter optic **1114** approximately collimated. Note that the quality of beam collimation relates to the size of the "emitting object" (miniature spot images **1110**) at the focal plane. Since this "emitting object" size has been reduced by using a micro-optic stack, a better collimation angle is obtained than if the emitter object was simply imaged directly.

Although FIG. **11** shows an enhanced light emission system having a micro-optic channel array formed of a substrate sandwiched between first and second optical surfaces, and positioned a distance away from a light emitter array by an open space to improve the brightness and intensity of light outputted by the light emission system, embodiments are not limited to such configurations. Rather, other embodiments may not necessarily implement an open space or two optical surfaces, as discussed further herein with respect to FIG. **12**.

FIG. **12** is a simplified cross-sectional view diagram of a second exemplary enhanced light emission system **1200**, according to some embodiments of the present disclosure. Similar to first exemplary enhanced light emission system **1100**, second exemplary enhanced light emission system **1200** can include bulk imaging optic **1214** and light emitter array **1202**. However, unlike first exemplary light emission system **1100**, second exemplary light emission system **1200** can include a micro-optic transmitter channel array **1206** that is positioned directly upon an emission surface of light emitter array **1202** instead of being separated by an open space/air gap, as shown in FIG. **12**.

In such embodiments, micro-optic transmitter channel array **1206** can be formed of a substrate **1219** and an optical surface **1220**. Optical surface **1220** can be positioned on a first surface **1230** of substrate **1219**. Second surface **1231** of substrate **1219** can be located opposite of first surface **1230** and positioned against light emitter array **1202** so that light emitted from emitters **1204** can first pass through substrate **1219** before passing through optical surface **1220**. Optical surface **1220** can be configured as an array of convex lenses where each convex lens of optical surface **1220** is configured to be optically aligned with a respective light emitter **1204** so that light outputted by the respective light emitter **1204** can transmit through the respective convex lens of optical surface **1220**. Convex lenses from optical surface **1220** can face away from their respective light emitters **1204** as shown in FIG. **12** so that their focal points are positioned further from light emitter **1204**. In certain embodiments, convex lenses of optical surface **1220** have an optical power suitable for converging the emitted light into real miniature spot images **1210** that are real images of corresponding light emitters **1204** but reduced-size images of the corresponding light emitters **1204** like the convex lenses of second optical surface **1121** in FIG. **11**. Optical surface **1120** enables the emitted light to diverge into light cones **1212** before projecting through bulk imaging optic **1214**. Substrate **1219** and optical surface **1220** can be formed of similar materials as substrate **1119** and optical surfaces **1120** and **1121** discussed herein with respect to FIG. **11**. In some embodiments, light cones **1212** may overlap forming cone overlap region **1216**.

Embodiments herein can also implement micro-optic channel arrays that do not include convex lenses and that do not generate real images of the light emitters. Rather, some embodiments may implement concave surfaces to generate virtual images of the light emitters, as discussed further herein with respect to FIG. **13**.

FIG. **13** is a simplified cross-sectional view diagram of a third exemplary enhanced light emission system **1300**, according to some embodiments of the present disclosure. Similar to first and second exemplary enhanced light emission systems **1100** and **1200**, third exemplary enhanced light emission system **1300** can include bulk imaging optic **1314** and light emitter array **1302**. However, unlike first and second exemplary light emission systems **1100** and **1200**, third exemplary light emission system **1300** can include a micro-optic transmitter channel array **1306** that includes an array of concave surfaces instead of an array of convex lenses, as shown in FIG. **13**.

In such embodiments, micro-optic transmitter channel array **1306** can be formed of a substrate **1319** and an optical surface **1320**. Optical surface **1320** can be a first surface **1330** of substrate **1319** positioned toward bulk imaging optic **1314** and away from light emitters **1304**. Second surface **1331** of substrate **1319** can be located opposite of first surface **1330** and positioned against light emitter array **1302** so that light emitted from emitters **1304** can first pass through substrate **1319** before passing through optical surface **1320**. Optical surface **1320** can each be configured as an array of concave surfaces where each concave surface of optical surface **1320** is configured to be optically aligned with a respective light emitter **1304** so that light outputted by the respective light emitter **1304** can transmit through the respective concave surface of optical surface **1320**. In certain embodiments, the concave surfaces of optical surface **1320** have an optical power suitable for forming virtual miniature spot images **1310** that are virtual images of corresponding light emitters **1304** but reduced-size images of the corresponding light emitters **1304**, and further enable the emitted light to diverge into light cones **1312** before projecting through bulk imaging optic **1314**. In some embodiments, virtual miniature spot images **1310** are formed within substrate **1319** as shown in FIG. **13**. In some embodiments, light cones **1312** may overlap forming cone overlap region **1316**. Substrate **1319** can be formed of similar materials as substrate **1119** discussed herein with respect to FIG. **11**.

Note that the lens configurations for the micro-optic channels for embodiments described in each of FIGS. **11**, **12** and **13** differs with respect to how many surfaces have optical power and the shapes of those surfaces. The first embodiment shown in FIG. **11** benefits from the ability to use two optical power surfaces on opposite sides of a substrate, which could allow each surface to be shallower,

spherical rather than aspherical, or otherwise more easily manufactured. This embodiment includes a spacer structure (not shown) to maintain an offset between the micro-optic channel array **1106** and the light emitter array **1102**. An example of such a spacer structure would be a silicon wafer with channels formed via deep reactive ion etching. The second embodiment shown in FIG. **12** benefits from having only one optical power surface on a substrate that is attached to the light emitter array. This type of configuration simplifies fabrication while also achieving enhanced brightness and intensity. The third embodiment shown in FIG. **13** shares the benefits of the embodiment shown in FIG. **12** but has a single optical surface that is formed of concave surfaces rather than convex lenses; concave features can often be easier to fabricate at the micro-scale.

In some embodiments, bulk imaging optics for light emission systems can include one or more aperture stops to reduce stray light emitted by the system. For instance, FIG. **14** is a simplified cross-sectional view diagram of an exemplary enhanced light emission system **1400** configured with bulk optics that have aperture stops, according to some embodiments of the present disclosure. FIG. **14** is substantially similar to FIG. **1** with the addition of aperture stop variants **1403**, **1405**, and **1406** for bulk transmitter optic **1414**. Aperture stop(s) shown in FIG. **14** can be used with any of FIGS. **11** through **13**. In FIG. **14**, aperture stops **1403**, **1405**, and **1407**, can have circular or oval openings for light to pass through, although any opening shape may be utilized without deviating from the spirit and scope of the present disclosure.

In some embodiments, aperture stop **1403** can be located on a side of bulk transmitter optic **1414** facing away from light emitter array **1402** and micro-optic transmitter channel array **1406**. In some additional and alternative embodiments, aperture stop **1405** can be located on a side of bulk transmitter optic **1414** facing toward light emitter array **1402** and micro-optic transmitter channel array **1406**. In yet some additional and alternative embodiments where bulk receiver optic **114** includes a plurality of lenses working together, aperture stop **1407** can be formed of one or more aperture stops placed within the plurality of lenses that form bulk transmitter optic **1414**.

The various configurations and locations of aperture stops **1403**, **1405**, and **1407** can dictate the way each aperture stop functions in the light emitting system. For example, if all the light cones **1412** are compressed to be substantially overlapping near the location of aperture stop **1407**, then the size of the aperture stop **1407** would be able control both the initial diameter of the emitted collimated beams as well as reject the marginal rays emitted by light emitters **1404**. Rejecting certain ray angles could effectively narrow the spectrum of light emitted out of the bulk optic, since the wavelength of light emitted by many types of lasers varies with angle. Alternatively, perhaps this best location for the aperture stop would occur at **1402** or **1403**, depending upon the design of the bulk transmitter optic **1414**. Multiple aperture stops may be used simultaneously—e.g. **1402**, **1403**, and **1404** all in one bulk transmitter optic **1414**—to reduce stray light emitted by light emitting system **1400**.

B. Optical Corrections for Astigmatism

As mentioned herein with respect to FIG. **7**, light detection systems and light emission systems can be enclosed within the same protective structure, e.g., stationary housing **702**, optically transparent window **704**, and stationary lid **706** in FIG. **7**. Light emitted from the light emission system, in some embodiments, exits out of transparent window **704**, and light detected by light detection system may first enter into transparent window **704**. The curvature of transparent window **704** can induce some optical aberrations, such as astigmatism. Because the transparent window can have a cylindrical structure and be well-controlled, it can be corrected with one or more additional optical structures. In some embodiments, light emission and/or detection systems can be configured with corrective optical structures to compensate for the astigmatism caused by the transparent window, as discussed further herein.

FIGS. **15**A-**15**C are cross-sectional views of simplified diagrams of exemplary active imager systems having different implementations of corrective optical structures for astigmatism, according to some embodiments of the present disclosure. Specifically, FIG. **15**A is a simplified cross-sectional view diagram of an active imager system **1500** having a corrective optical structure as part of the bulk imaging optic, FIG. **15**B is a simplified cross-sectional view diagram of an active imager system **1501** having a corrective optical structure as part of the micro-optic receiver channel array, and FIG. **15**C is a simplified cross-sectional view diagram of an active imager system **1502** having a corrective optical structure as part of the micro-optic transmitter channel array. Active imager systems **1500**, **1501**, and **1502** each include a light detection system **1504** and a light emission system **1506**. Components of active imager systems **1500**, **1501**, and **1502** are substantially similar to active optical imager system **1000** in FIG. **10** with the addition of the corrective optical structures. Thus, the components that are shared with active optical imager system **1000** are not discussed for brevity.

As shown in FIG. **15**A, active imager system **1500** can be housed within an enclosure containing a transparent window **1508**. Transparent window **1508** is at least transparent to the wavelength of light at which emitters **1510** operate. The curved shape of transparent window **1508** can induce an optical aberration, such as an astigmatism, in light rays **1511** emitted from light emission system **1506** when light rays **1511** exit the enclosure through transparent window **1508**. Light rays **1512** then enter back into the enclosure through transparent window **1508** after reflecting off of an object in the field, which can induce an additional optical aberration to the received light rays. To correct for these optical aberrations, light detection system **1504** can include corrective bulk imaging optic **1514** specifically designed to compensate for the expected astigmatism induced by transparent window **1508**. For example, corrective bulk imaging optic **1514** can include a corrective lens **1516** in addition to bulk receiver optic **1518**. Corrective lens **1516** can be any suitable lens capable of negating the astigmatism caused by transparent window **1508**, such as a cylindrical lens. Corrective lens **1516** can be positioned between transparent window **1508** and bulk receiver optic **1518** in some embodiments, or between bulk receiver optic **1518** and micro-optical receiver channel array **1505** in some other embodiments. Similarly, a corrective bulk optic could be included in the bulk transmitter optic of the light emission system **1506**.

Instead of incorporating the corrective optics into the bulk imaging optics, the corrective optics can be implemented into a micro-optical receiver channel array in some embodiments. For instance, with reference to FIG. **15**B, light detection system **1504** can include a corrective lens array **1520** in front of apertures **1522**, e.g., on the opposite side of apertures **1522** from where photosensors **1526** are positioned. That way, light cones **1524** can propagate through respective corrective lenses to compensate for astigmatism caused by transparent window **1508** before projecting on photosensors **1526**. In some embodiments, corrective lens

array **1520** is formed of an array of cylindrical lenses that can negate the astigmatism caused by transparent window **1508**. Each corrective lens of corrective lens array **1520** can be positioned in alignment with a respective aperture **1522** so that corrective lens array **1520** can negate the astigmatism caused by transparent window **1508** for light received by each photosensor **1526**.

Although FIGS. **15**A and **15**B illustrate ways in which a light detection system portion of a LIDAR system can be modified to correct for astigmatism caused by transparent window **1508**, embodiments are not limited to such configurations and corrective optics can be implemented in light emission systems as well. For example, with reference to FIG. **15**C, active imager system **1502** can include a corrective lens array **1528** in front of aperture layer **1530**, e.g., on the opposite side of aperture layer **1530** from where light emitters **1510** are positioned. That way, light emitted from light emitters **1510** can propagate through respective corrective lenses **1528** before emitting to bulk transmitter optics **1534**. In this case, respective corrective lenses **1528** can induce a corrective degree of astigmatism in the emitted light in anticipation of, and to compensate for, the astigmatism caused by transparent window **1508** as light is emitted out of light emission system **1506**. In some embodiments, corrective lens array **1528** is formed of an array of biconical lenses that can induce an equal but opposite degree of astigmatism caused by transparent window **1508**. Thus, the amount of astigmatism induced by corrective lens layer **1528** can be offset by the degree of astigmatism caused by transparent window **1508**, thereby effectively achieving little to no net astigmatism during operation of active imager system **1502**. Each corrective lens of corrective lens array **1528** can be positioned in alignment with a respective aperture **1532** so that corrective lens array **1528** can induce a corrective degree of astigmatism to negate the astigmatism caused by transparent window **1508** for light received by each photosensor **1526**. In some embodiments, corrective lens array **1528** may not be needed. Instead, optical surface **1536** can be an array of biconical lenses instead of an array of cylindrical lenses. The biconical structure of the lenses can induce an amount of astigmatism to offset the degree of astigmatism caused by transparent window **1508**. In these embodiments, corrective lens array **1528** may not be implemented in light emission system **1506**. Furthermore, in some embodiments, instead of (or in conjunction with) a corrective micro-optic lens array, a corrective bulk cylindrical lens can be implemented with bulk receiver optic **1534** (similar to the embodiment shown in FIG. **15**A for light detection system **1504**). Thus, light emission system **1506** can include a corrective bulk imaging optic in front of its bulk receiver optic **1534** to negate the astigmatism caused by transparent window **1508**.

V. Mitigating Receiver Channel Cross-Talk

As can be appreciated by disclosures herein, channels in the micro-optic receiver and are positioned very close to one another, often times within microns of one another. This small spacing between each channel can invite the opportunity for problems to arise. For instance, light propagating through bulk imaging optic can occasionally cause stray light to bleed into neighboring channels, thereby resulting in inaccurate readings of reflected light for each pixel in the field. Ideally, no stray light should be received by any channel, as shown in FIG. **16**A.

FIG. **16**A is a simplified cross-sectional view diagram of part of a light detection system **1600** where there is no cross-talk between channels. During operation, perpendicular light rays **1602** and chief ray **1604** enter the bulk imaging optic **1606** and produce light cone **1608**. Light rays **1602** and **1604** enter an aperture of aperture layer **1610** and enter collimating lens **1611**. Collimating lens **1611** accepts a limited range of incident light angles. For example, collimating lens **1611** can accept light rays at incident angles between +25 to −25 degrees relative to the perpendicular. FIG. **16**A shows light cone **1608** with incident angles between +25 to −25 degrees. The chief ray **1604** is the light ray that passes through the center of the aperture. In this example, the chief ray **1604** has an incident angle of 0 degrees on the collimating lens **1611**.

FIG. **16**B is a simplified cross-sectional view diagram of part of a light detection system **1601** where there is cross-talk between channels. In this case, during operation, oblique light rays **1612** and chief ray **1614** enter bulk receiver optic **1616** and later enter collimating lens **1621**. In this example, collimating lens **1621** belongs to a micro-optic channel that corresponds to a photosensor further from the center of the image. In this example, chief ray **1614** has an incident angle of −12 degrees and the cone of focused light has incident angles between +12 degrees to −35 degrees. Collimating lens **1621** rejects some of the light rays because it only accepts light with incident angles between +25 to −25 degrees. Additionally, the rays that are outside of the collimating lens acceptance cone can travel to other optical surfaces and become stray light. Thus, a non-telecentric bulk imaging optic will deliver significantly fewer signal photons to the photodetector, while potentially polluting other channels with errant light rays **1622**. A telecentric bulk imaging optic, on the other hand, will produce light cones with incident angles approximately between +25 to −25 degrees and chief rays with incident angles on the collimating lens of approximately 0 degrees, regardless of the angle of the oblique rays **1612** and chief ray **1614**. A telecentric bulk imaging optic has similar benefits for the transmitter when the lasers are telecentric (their chief rays are all parallel) as is the case for VCSELS or a side emitter diode laser bar.

In some embodiments, the light detection system of a light sensing module uses an input image-space telecentric bulk imaging optic. In some other embodiments, for example where cost or increased field of view is more important than performance, the light detection system may use a more standard input bulk imaging optic such as a bi-convex lens. For any given input field into an image-space telecentric lens, the resulting chief rays are parallel to the optical axis, and the image-side ray cones all span approximately the same set of angles. This allows micro-optic channels far from the optical axis in the light detection system to achieve similar performance to the on-axis micro-optic channel. The light detection system does not need perfect image space telecentricity for this to work, but the closer to perfect telecentricity the better. For a micro-optic receiver optical layer lens that can only accept+/−25 degree light, the preference is that the input bulk imaging optic produce image-side rays that are no greater than 25 degrees in angle for every point on the focal plane.

In certain embodiments, specific light detection systems having wide field of view and narrowband imaging can have an input image-space telecentric bulk imaging optic with a numerical aperture (NA) equal to 0.34 and focal length of 20 mm. Similarly, some other embodiments could have a 1 nm wide bandpass filter, thereby enabling it to detect light of a very specific wavelength. The light detection system is capable of supporting FOVs greater than 30 degrees.

According to some embodiments of the present disclosure, the design of each channel of the micro-optic receiver channel array can be specifically configured to have features

that minimize the intrusion of stray light onto a respective photodetector, thereby reducing or eliminating any detrimental effects caused by the occurrence of stray light. FIG. **17** is a simplified cross-sectional diagram of an exemplary micro-optic receiver channel structure **1700**, also called a micro-optic receiver channel in discussions herein. Receiver channel **1700** can be representative of micro-optic receiver channels **232** and **1032**, among others, shown in FIGS. **2** and **10**, respectively, and serves to accept an input cone of light containing a wide range of wavelengths, filters out all but a narrow band of those wavelengths centered at the operating wavelength, and allows photosensor **1771** to detect only or substantially only photons within the aforementioned narrow band of wavelengths. According to some embodiments of the present disclosure, micro-optic receiver channel structures, such as receiver channel **1700**, can include the following layers:

An input aperture layer **1740** including an optically transparent aperture **1744** and optically non-transparent stop region **1746** configured to define a narrow field of view when placed at the focal plane of an imaging optic such as bulk receiver optic **202** or **1008** (shown in FIGS. **2** and **10**, respectively; not shown in FIG. **17**). Aperture layer **1740** is configured to receive the input marginal ray lines **1733**. The term "optically transparent" herein refers to as allowing most or all light to pass through. Light herein refers to spectrum of light in the near-ultraviolet, visible, and near-infrared range (e.g. 300 nm to 5000 nm). Optically non-transparent herein refers to as allowing little to no light to pass through, but rather absorbing or reflecting the light. Aperture layer **1740** can include optically transparent apertures separated from each other by optically non-transparent stop regions. The apertures and stop regions can be built upon a single monolithic piece such as an optically transparent substrate. Aperture layer **1740** can optionally include a one-dimensional or two-dimensional array of apertures **1744**.

An optical lens layer **1750** including a collimating lens **1751** characterized by a focal length, offset from the plane of aperture **1744** and stop region **1746** by the focal length, aligned axially with aperture **1744**, and configured to collimate photons passed by the aperture such that they are traveling approximately parallel to the axis of collimating lens **1751** which is aligned with the optical axis of receiver channel **1700**. Optical lens layer **1750** may optionally include apertures, optically non-transparent regions and tube structures to reduce cross talk.

An optical filter layer **1760** including an optical filter **1761**, typically a Bragg reflector type filter, adjacent to collimating lens **1751** and opposite of aperture **1744**. Optical filter layer **1760** can be configured to pass normally incident photons at a specific operating wavelength and passband. Optical filter layer **1760** may contain any number of optical filters **1761**. Optical filter layer **1760** may optionally include apertures, optically non-transparent regions and tube structures to reduce cross talk.

A photosensor layer **1770** including a photosensor **1771** adjacent to optical filter layer **1760** and configured to detect photons incident on photosensor **1771**. Photosensor **1771** herein refers to a single photodetector capable of detecting photons, e.g., an avalanche photodiode, a SPAD (Single Photon Avalanche Detector), RCP (Resonant Cavity Photo-diodes), and the like, or several photodetectors, such as an array of SPADs, cooperating together to act as a single photosensor, often with higher dynamic range, lower dark count rate, or other beneficial properties as compared to a single large photon detection area. Each photodetector can be an active area that is capable of sensing photons, i.e., light. Photosensor layer **1770** refers to a layer made of photodetector(s) and contains optional structures to improve detection efficiency and reduce cross talk with neighboring receiver structures. Photosensor layer **1770** may optionally include diffusers, converging lenses, apertures, optically non-transparent tube spacer structures, optically non-transparent conical spacer structures, etc.

Stray light may be caused by roughness of optical surfaces, imperfections in transparent media, back reflections, and the like, and may be generated at many features within the receiver channel **1700** or external to receiver channel **1700**. The stray light may be directed: through the filter region **1761** along a path non-parallel to the optical axis of collimating lens **1751**; reflecting between aperture **1744** and collimating lens **1751**; and generally taking any other path or trajectory possibly containing many reflections and refractions. If multiple receiver channels are arrayed adjacent to one another, this stray light in one receiver channel may be absorbed by a photosensor in another channel, thereby contaminating the timing, phase, or other information inherent to photons. Accordingly, receiver channel **1700** may feature several structures to reduce crosstalk between receiver channels.

As will be understood further herein, each layer of a micro-optic channel layer structure can be designed a specific way to mitigate the detrimental effects of stray light. Various different designs for each layer will now be discussed in further detail below.

A. Aperture Layer

In an embodiment having aperture layer **1740**, as shown in FIG. **17**, optically transparent aperture **1744** and optically non-transparent stop region **1746** can be formed from a single monolithic piece, such as a metal foil with a pinhole or from a single layer of a deposited opaque or reflective material having apertures etched therethrough.

FIG. **18**A is a simplified cross-sectional view diagram of a different embodiment **1800** where aperture layer **1840** has two apertures **1844**. Both the optically transparent apertures **1844** and corresponding optically non-transparent optical stop regions **1846** are supported on an optically transparent substrate **1845**. Bottom aperture **1844** can be smaller and be positioned at the focal plane of the bulk optic. Aperture layer **1840** can be followed by optically transparent spacer structure **1856** positioned between aperture **1844** and collimating lens **1851** in the receiver channel. Optically transparent spacer structure **1856** forms a tube of substantially similar or larger diameter to collimating lens **1851**.

FIG. **18**B is a simplified cross-sectional view diagram of a different embodiment **1801** of aperture layer **1840**. Optically transparent aperture **1844** and optically non-transparent stop region **1846** are supported on optically transparent substrate **1845**. Optically transparent spacer structure **1856** that follows aperture layer **1840** and positioned between aperture **1844** and collimating lens **1851** forms a tube of substantially similar or larger diameter to collimating lens **1851**.

FIG. **18**C is a simplified cross-sectional view diagram of an embodiment **1802** of aperture layer **1840** consisting of multiple optically non-transparent stop regions **1846** that are supported on optically transparent substrate **1845**. These layers (stop regions **1846**) follow the contour of marginal

light rays (not shown, but similar to light rays **1733** in FIG. **17**) to reduce stray light into the receiver channel. Optically transparent spacer structure **1856** below aperture layer **1840** forms a tube of substantially similar or larger diameter to collimating lens **1851**.

FIG. **18**D is a simplified cross-sectional view diagram of an embodiment **1803** of aperture layer **1840** having multiple optically non-transparent stop layers **1846** supported on multiple optically transparent substrate **1845**. Aperture layer **1840** follows the contour of marginal light rays (not shown, but similar to light rays **1733** in FIG. **17**) to reduce stray light into the receiver channel. Optically transparent spacer structure **1856** below aperture layer **1840** forms a tube of substantially similar or larger diameter to collimating lens **1851**.

In some other embodiments of the present disclosure, spacer structure **1856** shown in FIGS. **18**A-D, can be optically non-transparent. The optically non-transparent spacer structure in this instance could be formed by etching a silicon or glass wafer and may be coated with an optically non-transparent material (e.g. black chrome). Additionally, the spacer structure in this instance would prevent any light in the spacer region from traveling outside the receiver channel.

B. Spacer Structure Between Aperture Layer and Optical Lens Layer

FIG. **19**A is a simplified cross-sectional view diagram of an embodiment **1900** of the present disclosure with an optically non-transparent spacer structure between the aperture layer and the lens layer. FIG. **19**A depicts an optically non-transparent spacer structure **1956** positioned between aperture **1944** and collimating lens **1951** in the receiver channel. Optically non-transparent spacer structure **1956** forms a tube of substantially similar or larger diameter to collimating lens **1951** and prevents any light from traveling outside the receiver channel in the region between aperture **1944** and collimating lens **1951**. Optically non-transparent spacer structure **1956** could be formed by etching a silicon or glass wafer and may be coated with an optically non-transparent material (e.g. black chrome). Alternatively, optically non-transparent spacer structure **1956** could be a solid non-transparent structure that is fabricated from molded polymer or any other suitable method. FIG. **19**A shows the aperture layer having optically transparent substrate **1945** on the top, followed by the optically non-transparent stop region **1946** and aperture **1944**, and then by optically non-transparent spacer structure **1956**.

FIG. **19**B is a simplified cross-sectional view diagram of an embodiment **1901** of the present disclosure with an optically non-transparent structure between the aperture layer and the lens layer. FIG. **1901** depicts an optically non-transparent spacer structure **1956** positioned between aperture **1944** and collimating lens **1951**. Optically non-transparent spacer structure **1956** forms a tube of substantially similar or larger diameter to collimating lens **1951** and prevents any light from traveling outside of the receiver channel in the region between aperture **1944** and collimating lens **1951**. FIG. **19**B shows multiple optically non-transparent stop regions **1946** supported on optically transparent substrate **1945**.

FIG. **19**C is a simplified cross-sectional view diagram of an embodiment **1902** of aperture layer **1940** where aperture **1944** is conically aligned, and where the conical structure as an optically non-transparent layer coated on an optically transparent material.

FIG. **19**D is a simplified cross-sectional view diagram of an embodiment **1903** of aperture layer **1940** where the aperture **1944** is conically aligned, and where the conical structure is a solid structure formed of an optically non-transparent material. As shown in FIGS. **19**C and **19**D the optically transparent aperture **1944** and optically non-transparent stop region **1946** are combined into a monolithic layer with a conical cavity aligned with the optical axis of the receiver channel and configured to conform to the shape of marginal ray lines (not shown, but similar to light rays **1733** in FIG. **17**).

C. Optical Filter Layer

FIG. **20**A is a simplified cross-sectional view diagram of an embodiment **2000** of filter layer **2060** for a receiver channel, according to some embodiments of the present disclosure. Optical filter layer **2060** can include a single optical filter **2061** supported on an optically transparent substrate **2065**. Optical filter layer **2060** can be placed on top of optically transparent substrate **2065** or below optically transparent substrate **2065**. Optical filter **2061** can be a bandpass filter that blocks incident light outside of a defined set of wavelengths (e.g. 945-950 nm). However, in some other embodiments, optical filter **2061** can be an edge pass filter or any other suitable type of filter that selectively allows light within a wavelength range to pass through itself.

FIG. **20**B is a simplified cross-sectional view diagram of an embodiment **2001** of filter layer **2060** for a receiver channel, according to some embodiments of the present disclosure. Optical filter layer **2060** can include two optical filters **2061** sandwiching and supported by an optically transparent substrate **2065**. Optical filter layer **2060** can contain any number of optical filters **2061** on any number of substrates **2065**. One of the optical filters **2061** as shown in FIG. **20**B can be a bandpass filter and can be positioned on either on top of or directly below optically transparent substrate **2065** that blocks all of the incident light for a defined set of wavelengths (e.g. 900-945 nm and 950-995 nm). The other optical filter **2061** placed on the opposite side of the optical substrate **2065** can be a wide spectrum blocking filter (except for the region covered by the bandpass filter), for example covering 200-915 nm and 980-1600 nm. The bandpass filter and blocking filter are designed such that there is no leakage in the transition region between the two filters. However, the filters could be two edge pass filters designed to work in conjunction as a bandpass filter or any other types of filters.

In some other embodiments of the present disclosure, the bandpass filter and wide spectrum blocking filter are merged into a single optical filter **2061** and placed on either the top or bottom of optically clear substrate **2065**.

1. Filter Layer with Apertures

FIG. **20**C is a simplified cross-sectional view diagram of an embodiment **2002** of filter layer **2060** for a receiver channel, according to some embodiments of the present disclosure. Optical filter layer **2060** can have an additional aperture **2049** on top and an additional aperture **2054** on the bottom of optical filter layer **2060** along with the corresponding optically non-transparent stop regions **2063** & **2055**. Aperture **2049** defines the maximal cylinder of light desired to be passed into optical filter layer **2060** by optical filter **2061**, and stop region **2063** an absorb or reflect any incident stray light outside the diameter of aperture **2049**. Aperture **2054** defines the maximal cylinder of light desired to be passed out of optical filter layer **2060** and stop region **2055** absorbs or reflects any incident stray light outside the diameter of aperture **2054**. Optical filters **2061** can be supported on an optically transparent substrate **2065**.

In some embodiments of the present disclosure, filter layer **2060** can have a single aperture **2049** placed on the top of the optical filter layer **2060**. In some additional and

alternative embodiments of the present disclosure, filter layer **2060** can have a single aperture **2054** placed on the bottom of optical filter layer **2060**.

FIG. **20**D is a simplified cross-sectional view diagram of an embodiment **2003** of filter layer **2060** for a receiver channel, according to some embodiments of the present disclosure. Optical filter layer **2060** can include multiple optically transparent substrates **2065**, and multiple optically non-transparent aperture layers between them in an alternating order. FIG. **20**D shows an additional aperture **2049** and corresponding optically non-transparent stop region **2063** positioned on top of optical filter **2061** and supported by optically transparent substrates **2065**. Aperture **2049** can define the maximal cylinder of light desired to be passed into optical filter layer **2060** by optical filter **2061**, and stop region **2063** absorbs or reflects any incident stray light outside diameter of aperture **2049**. FIG. **20**D shows an additional aperture **2054** and corresponding optically non-transparent stop region **2055** positioned between optical filter layer **2060** and a photosensor layer (not shown, but similar to photosensor layer **1770** in FIG. **17**). Aperture **2054** can define the maximal cylinder of light desired to be passed out of optical filter layer **2060** toward the photosensor, and stop region **2055** can absorb or reflect any incident stray light outside the diameter of aperture **2054**. Collectively, these interleaved layers prevent stray light in one optical filter layer **2060** from traveling into an optical filter region of an adjacent receiver channel in a multi receiver channel system.

2. Filter Layer with Tube Structure

FIG. **20**E is a simplified cross-sectional view diagram of an embodiment **2004** of filter layer **2060** for a receiver channel, according to some embodiments of the present disclosure. Optical filter layer **2060** can include optical filter **2061** and optically transparent substrate **2065** and be surrounded by an optically non-transparent tube structure **2111**, which prevents stray light in one optical filter layer **2060** from traveling into an optical filter region of an adjacent receiver channel in a multi receiver channel system. Tube structure **2111** can be formed of a variety of materials, including but not limited to silicon, metals, polymers, or glasses.

FIG. **20**F is a simplified cross-sectional view diagram of an embodiment **2005** of filter layer **2060** for a receiver channel, according to some embodiments of the present disclosure. Optical filter layer **2060** can include optical filter **2061** and optically transparent substrate **2065** and is surrounded by an optically non-transparent tube structure **2111**, which prevents stray light in one optical filter layer **2060** from traveling into an optical filter region of an adjacent receiver channel in a multi receiver channel system. Tube structure **2111** can be formed of a variety of materials, including but not limited to silicon, metals, polymers, or glasses. As shown in FIG. **20**F, tube structure **2111** may only pass partially through optical filter layer **2060**. This type of structure can be formed by performing deep anisotropic etches on each side of filter substrate **2065** and selectively depositing metal or polymer afterwards.

FIG. **20**G is a simplified cross-sectional view diagram of an embodiment **2006** of filter layer **2060** for a receiver channel, according to some embodiments of the present disclosure. Optical filter layer **2060** can include two optical filters **2061** supported on optically transparent substrates **2065** and surrounded by an optically non-transparent tube structure **2111**, which prevents stray light in one optical filter layer **2060** from traveling into an optical filter region of an adjacent receiver channel in a multi receiver channel system. However, the optical filter region may contain any number of optical filters **2061** on any number of substrates **2065** within the optical filter layer **2060**. FIG. **20**G illustrates an additional aperture **2049** and corresponding optically non-transparent stop region **2063** positioned on top of optical filter **2061** and supported by optically transparent substrate **2065**. Aperture **2049** can define the maximal cylinder of light desired to be passed into optical filter layer **2060** and stop region **2063** can absorb or reflect any incident stray light outside the diameter of aperture **2049**.

Embodiment **2006** of optical filter layer **2060** in FIG. **20**G can have an additional aperture **2054**, and corresponding optically non-transparent stop region **2055** can be positioned between optical filter layer **2060** and the photosensor layer (not shown, but similar to photosensor layer **1770** in FIG. **17**). Aperture **2054** can define the maximal cylinder of light desired to be passed out of optical filter layer **2060** toward the photosensor, and stop region **2055** can absorb or reflect any incident stray light outside the diameter of aperture **2054**. Tube structure **2111** can be formed of a variety of materials, including but not limited to silicon, metals, polymers, or glasses.

D. Photosensor Layer

As can be appreciated herein, various different photosensor layer designs can be implemented in a micro-optic receiver channel.

1. Photosensor Layer with Diffuser

FIG. **21**A is a simplified cross-sectional view diagram of an embodiment **2100** of receiver channel **2132** containing an optional diffuser **2181** located in photosensor layer **2170** between optical filter **2161** and photosensor **2173**, according to some embodiments of the present disclosure. Diffuser **2181** can be configured to spread collimated photons that are output from collimating lens **2151** and passed by optical filter region **2160**, across the full width of a corresponding photosensor **2173**. Photosensor **2173** may be non-square or non-circular in geometry (e.g., short and wide) in order to extend the sensing area of photosensor **2173** to be wider or taller than width or height of the other components in receiver channel **2132**.

Diffuser **2181** is configured to spread light rays across the area of photosensor **2173** such that photosensor **2173** is able to detect the incident photons across its full width and height, thereby increasing the dynamic range of receiver channel **2132**, even where the overall height of receiver channel **2132** has to be limited for practical considerations. In particular, in this embodiment, receiver channel **2132** may include widened photosensors exhibiting greater photodetectors **2171** (i.e., areas sensitive to incident photons) and a diffuser **2181** arranged over photosensor **2173** that spreads light passed by optical filter **2161** across the full area of photosensor **2173**, thereby yielding increased dynamic range.

In some embodiments, photosensor **2173** includes an array of single-photon avalanche diode detectors **2171** (hereinafter "SPADs"). The height and width of the receiver channel (usually defined by the diameter of collimating lens **2151**) may accommodate only a relatively small number of (e.g., two) vertically-stacked SPADs. Photosensor **2173** can therefore define an aspect ratio greater than 1:1, and diffuser **2181** can spread light rays passed by the optical filter region **2160** according to the geometry of photosensor **2173** in order to accommodate a larger sensing area per photosensor. By incorporating more SPADs per photosensor, the dynamic range of the photosensor can be increased, as it less likely for all SPADs to be unable to detect photons (i.e., to be "dead") simultaneously.

In some other embodiments, photosensor **2173** includes an array of photodetectors **2171**. The height and width of the receiver channel (usually defined by the diameter of collimating lens **2151**) may accommodate only a relatively small number of (e.g., two) vertically-stacked photodiodes. Photosensor **2173** can therefore define an aspect ratio greater than 1:1, and diffuser **2181** can spread light rays passed by the optical filter region **2160** according to the geometry of photosensor **2173** in order to accommodate a larger sensing area per photosensor. By incorporating more photodiodes per photosensor, the dynamic range of the photosensor can be increased, as it is unlikely for all photodiodes to be saturated simultaneously.

Receiver channel **2132** can additionally or alternatively include an aperture layer interposed between optical filter region **2160** and diffuser **2181** or between the optical filter region **2160** and photosensor **2173**, where aperture **2144** is aligned with a corresponding collimating lens **2151**. In this variation, aperture **2144** can absorb or reflect errant light rays passed by the light filter or reflected by the photosensor to further reduce crosstalk between receiver channels, thereby further increasing SNR (Signal to Noise Ratio) of the system.

2. Photosensor Layer with Converging Lens Set

FIG. **21**B is a simplified cross-sectional view diagram of an embodiment **2101** of receiver channel **2132**, according to some embodiments of the present disclosure. A photosensor layer **2170** of embodiment **2100** can include a photosensor **2173** formed of a set of discrete photodetectors **2171** (e.g., SPADs) and a set of inactive regions **2172** (e.g., integrated logic) encompassing the set of photodetectors, where each photodetector is configured to detect incident photons. Photosensor layer **2170** can also include a converging lens set **2191** interposed between optical filter region **2160** and photosensor **2173** with photodetectors **2171**, and including one converging lens **2191** per discrete photodetector **2171** within photosensor **2173**, where each lens of the converging lens set **2191** is configured to focus incident photons passed by optical filter region **2160** onto a corresponding discrete photodetector **2171**. Each converging lens can exhibit a common focal length, and converging lens set **2191** can be offset above photosensor **2173** by this common focal length (or by a distance substantially similar to this common focal length), and each converging lens can converge incident light—collimated in optical lens layer **2150** and passed by optical filter region **2160**—onto a corresponding photodetector **2171** in photosensor **2173**.

In some embodiments, converging lens set **2191** interposed between optical filter region **2160** and photosensor **2173** with photodetectors **2171** employs diffracting elements in addition to or replacement of refractive elements.

3. Photosensor Layer with Converging Lens Set and Additional Apertures

FIG. **21**C is a simplified cross-sectional view diagram of an embodiment **2102** of photosensor layer **2170**, according to some embodiments of the present disclosure. Photosensor layer **2170** can include a converging lens set **2191**, and a set of apertures **2157**, wherein each aperture **2157** is aligned with a corresponding converging lens **2191**. In this variation, each aperture **2157** can absorb or reflect errant light rays passed by the light filter or reflected by the photosensor to further reduce crosstalk between receiver channels, thereby further increasing the SNR of the system. Set of apertures **2157** and corresponding optically non-transparent stop regions **2159** are built on an optically transparent substrate **2158**.

FIG. **21**D is a simplified cross-sectional view diagram of an embodiment **2103** of photosensor layer **2170**, according to some embodiments of the present disclosure. Photosensor layer **2170** can include converging lens set **2191**, and set of apertures **2157**, where each aperture **2157** is aligned with a corresponding converging lens **2191**. Apertures **2157** and corresponding optically non-transparent stop regions **2159** are built on an optically transparent substrate **2158**. In this variation, apertures **2157** do not go all the way through to photodetector **2171**.

FIG. **21**E is a simplified cross-sectional view diagram of an embodiment **2104** of photosensor layer **2170**, according to some embodiments of the present disclosure. An additional set of apertures **2157** and corresponding optically non-transparent stop regions **2159** defining desired maximal light cones can be positioned between lens set **2191** and photodetector **2171**. Set of apertures **2157** and corresponding non-transparent stop regions **2159** define a light cone for every lens in lens set **2191** and function to absorb or reflect any stray light traveling along a path not encompassed by the desired light cones. The apertures may be fabricated using standard semiconductor processes.

4. Photosensor Layer with Converging Lens Set and Spacer Structure Between the Lens Set and the Photosensor

FIG. **21**F is a simplified cross-sectional view diagram of an embodiment **2105** of photosensor layer **2170**, according to some embodiments of the present disclosure. Here, an optically non-transparent spacer structure **2163** is positioned between lens set **2191** and photosensor **2173** having photodetectors **2171** in receiver channel **2132**. Optically non-transparent spacer structure **2163** forms a tube of substantially similar or larger diameter to a collimating lens (e.g., collimating lens **1751** shown in FIG. **17**) and prevents any light from traveling outside of receiver channel **2132** in the region between lens set **2191** and photosensor **2173**. Optically non-transparent spacer structure **2163** could be made from optically non-transparent bulk media (e.g. silicon or polymer).

FIG. **21**G is a simplified cross-sectional view diagram of an embodiment **2106** of photosensor layer **2170**, according to some embodiments of the present disclosure. Here, optically non-transparent spacer structure **2163** is positioned between lens set **2191** and photosensor **2173**, and is made from an optically non-transparent coating on an optically transparent substrate (e.g. black chrome on glass). Optically non-transparent spacer structure **2163** forms a tube of substantially similar or larger diameter to collimating lens **2151** and prevents any light from traveling outside of receiver channel **2132** in the region between lens set **2191** and photodetector **2171**.

5. Photosensor Layer Spacer Structure Between the Filter Layer and the Photosensor Layer

FIG. **21**H is a simplified cross-sectional view diagram of an embodiment **2107** of photosensor layer **2170**, according to some embodiments of the present disclosure. Optically non-transparent spacer structure **2163** can be positioned between an optical filter layer (e.g., any of the above-mentioned optical filter layers) and photosensor layer **2170**. Optically non-transparent spacer structure **2163** forms a tube of substantially similar or larger diameter to a collimating lens (e.g., collimating lens **1751** in FIG. **17**) and prevents any light from traveling outside of the receiver channel (e.g., channel **1700** in FIG. **17**) in the region between the optical filter layer and photosensor layer **2170**. Optically non-transparent spacer structure **2163** can be formed by etching a silicon or glass wafer and may be coated with an optically non-transparent material (e.g. black chrome). Alternatively,

optically non-transparent spacer structure **2163** can be fabricated from molded polymer. In this embodiment, lens set **2191** is directly bonded to photosensor **2173**. Similar to its function in previous embodiments, lens set **2191** serves to focus light onto photodetectors **2171** of photosensor **2173**, rather than the inactive areas. These lenses could be integrated directly on top of an ASIC containing photosensor **2173** in a wafer fabrication process, easing production.

6. Photosensor Layer with Conical Spacer Structures

FIG. **21**I is a simplified cross-sectional view diagram of an embodiment **2108** of photosensor layer **2170**, according to some embodiments of the present disclosure. In this embodiment, photosensor layer **2170** includes a set of conical, optically non-transparent spacer structures **2164** that is positioned between a lens set (not shown but, e.g., lens set **2191** in FIGS. **21**F and **21**G) and photosensor **2173**. Set of conical, optically non-transparent spacer structures **2164** can form tapered tubes, each with substantially similar entrance diameter to individual lenses in the lens set, and each with substantially similar exit diameter to the individual photodetectors **2171** of photosensor **2173**. Set of conical, optically non-transparent spacer structures **2164** prevents any light from traveling outside of the receiver channel in regions between the lens set and photosensor **2173** and also guide light toward the photodetectors **2171** of photosensor **2173**. The set of conical, optically non-transparent spacer structures **2164** can be formed by etching a silicon or glass wafer and may be coated with an optically non-transparent material (e.g. black chrome). Alternatively, set of conical, optically non-transparent spacer structures **2164** can be fabricated from molded polymer.

FIG. **21**J is a simplified cross-sectional view diagram of an embodiment **2109** of photosensor layer **2173**, according to some embodiments of the present disclosure. In this embodiment, photosensor layer **2173** includes a set of conical, optically non-transparent spacer structures **2164** that is positioned between a lens set (not shown but, e.g., lens set **2191** in FIGS. **21**F and **21**G) and photodetector **2171**. The inner walls of the set of conical, optically non-transparent spacer structures **2164** are coated with a reflective material (e.g. chrome) in order to further enhance the structures' ability to act as a light pipe. Set of conical, optically non-transparent spacer structures **2164** form tapered tubes, each with substantially similar entrance diameter to individual lenses in the lens set, and each with substantially similar exit diameter to the individual photodetectors **2171** of photosensor **2173**. Set of conical, optically non-transparent spacer structures **2164** prevents any light from traveling outside of the receiver channel in regions between the lens set and photosensor **2171** and also guide light toward the photodetectors **2171** of photosensor **2173**.

7. Photosensor Layer with Resonant Photo-Cavity Diodes

FIG. **21**K is a simplified cross-sectional view diagram of a receiver channel **2132** including an embodiment **2110** of photosensor layer **2170**, according to some embodiments of the present disclosure. In this embodiment, photosensor layer **2170** is configured with a resonant cavity around a photo sensitive diode to improve the photon detection efficiency. Each photosensor **2173** includes one or more resonant photo-cavity diodes. Each photosensor **2173** includes one or more photo-diodes **2174** (photodetectors) along with highly-reflective (e.g., partially-mirrored) surfaces facing the top and bottom of the area (the resonant cavity). Generally, an photodetector of a non-resonant cavity diode may have a relatively low quantum efficiency. To improve the percentage of photons detected by the photodetector, resonant photo-cavity diode **2174** is used that includes: a first mirrored surface **2175** below and facing the photodetector; and a second partially mirrored surface **2176** above and facing the photodetector, that also allows light to enter the cavity as shown in FIG. **21**K. Thus, when a photon passes through and is not detected by an photodetector of resonant photo-cavity diode **2174**, first mirrored surface **2175** surrounding the photodetector of resonant photo-cavity diode **2174** reflects the photon back toward top reflective surface **2176** of the cavity and through the photodetector again, which may detect the photon upon its second transition through the photodetector. However, if the photodetector fails to detect the photon upon this second collision, the reflection process is repeated with the second mirrored surface reflecting the photon back toward the photodetector, which again may detect the photon upon its third collision with the photodetector. This process may repeat until the photon is detected by the photodetector of the photosensor or the photon escapes or is absorbed by the cavity. Resonant photo-cavity diode **2174** can thus achieve a relatively high rate of photon detection (i.e. approaching 100%). Note that a particle interpretation of light is used in the preceding description, but consideration of wave interference effects are critical for a complete description of resonant cavity photodiodes. Also note that the active region of resonant photo-cavity diode **2174** may be comprised of a standard photodiode, an avalanche photodiode, a SPAD, or any other photosensor.

FIG. **21**K further shows that one or more resonant cavity photodiodes (or "RCPs") **2174** may be combined with aperture **2144**, collimating lens **2151**, optical filter region **2160**, and any combination of the aforementioned diffusers, converging lens sets, or crosstalk mitigation structures to form a variant of receiver channel **2132**. A typical RCP will have similar wavelength sensitivity as optical filter region **2160** and can be designed to be sensitive to a similar set of wavelengths of light as optical filter region **2160**. However, due to fabrication or other limitations, the RCP may have more part-to-part variability of the center wavelength of the RCP's operating spectrum and thus necessitate a broader operating wavelength band in order for every photosensor to be capable of detecting photons at the system's operating wavelength. Alternatively, it may simply be impossible to reliably fabricate an RCP with an operating wavelength band as narrow as the filter passband. For instance, optical filter region **2160** may have a passband as narrow as 0.1 nm, while the RCP may have an operating band of 10 nm. With the optical filter region **2160** on top of the RCP **2174**, the combined filter and RCP system has an effective operating wavelength band substantially similar to optical filter region **2160**. In addition, the RCP performance is improved when sensing collimated light, as opposed to focused light, which is provided as a result of collimating lens **2151** as depicted in FIG. **21**K. In this way, a system employing aperture **2144**, collimating lens **2151**, optical filter region **2160**, and RCP **2174** may achieve high photon detection efficiency and narrow wavelength selectivity to maximize the SNR within receiver channel **2132**.

E. Hemispherical Receiver Structures

FIG. **22**A is a simplified cross-sectional view diagram of an embodiment **2200** of a receiver channel **2232**, according to some embodiments of the present disclosure. Receiver channel **2232** of embodiment **2200** can include convex hemispheres supported on an optically non-transparent material. In this embodiment, an aperture layer **2240** is combined with an optical filter **2261** coated on a convex hemisphere **2267**, with the center of hemisphere **2267** located at or near the focal point of incoming light (marginal

ray lines **2233**). The center of hemisphere **2267** also corresponds to, or nearly corresponds to, the center of aperture **2244**. In some embodiments, hemisphere **2267** can be below aperture **2244**, as shown in FIG. **22**A. An advantage of the embodiment is that for a sufficiently well-focused cone of rays, any ray lines **2233** will pass through optical filter **2261** normal to the filter's surface, thereby eliminating CWL (Center Wave Length) shift due to variations in incident angle of the light (e.g. light rays **2233**) on optical filter **2261**, thereby allowing the use of very narrow bandpass (e.g. 850-852 nm) filters.

This is further illustrated in FIG. **22**B, which is a simplified cross-sectional view diagram of an embodiment **2201** of receiver channel **2232**, according to some embodiments of the present disclosure. Unlike embodiment **2200** in FIG. **22**A, embodiment **2201** in FIG. **2**B can be configured so that hemisphere **2267** is positioned above aperture **2244** to achieve similar functionality but with a less compact footprint. As shown in FIG. **22**B, the angle of incidence on optical filter **2261** is normal for marginal ray lines **2233** (and all other ray lines not shown explicitly in FIG. **22**B) that pass through the center of hemisphere **2267**. Note that, while not shown in FIG. **22**B or **22**C, the rays will refract upon exiting the hemisphere structure since they are not normal to the planar exit surface. Similarly, in FIG. **22**A, there will be some amount of refraction when rays enter the flat side of the hemispherical structure.

As illustrated in FIGS. **22**A to **22**B, receiver channel **2232** includes sidewalls **2263** between optically non-transparent stop region **2246** and photosensor layer **2270** with photodetectors **2271** to reduce crosstalk. Sidewalls **2263** can be made up of optically non-transparent material or made up of optically transparent material. In addition, sidewalls **2263** can also be coated with reflective or absorptive material.

A close-up view of the convex hemispherical surface is shown in FIG. **22**C, which is a simplified cross-sectional view diagram of convex hemisphere **2267** of FIGS. **22**A and **22**B. Convex hemisphere **2267** can be coated with optical filter **2261** and positioned on a self-supporting, optically non-transparent stop region **2246** such as metal, silicon, polymer etc. In some embodiments where the convex hemispherical surfaces of the micro-optic channels are used for hyperspectral imagers, optical filter **2261** can be configured to be non-uniform. For example, optical filter **2261** can be a graduated filter increasing gradually or in a step-wise manner in one direction (e.g., the thickness direction) that different micro-optic channels have different optical filter layers that have different thicknesses. This allows different micro-optic channels to measure a different range of wavelengths as discussed herein with respect to FIGS. **3**A and **3**B.

FIG. **22**D is a simplified cross-sectional view diagram of an embodiment **2202** of a receiver channel **2232**, according to some embodiments of the present disclosure. Receiver channel **2232** of embodiment **2202** can include convex hemisphere **2267** supported on a rigid optically transparent layer. In this embodiment, aperture layer **2240** is combined with optical filter **2261** and coated on convex hemisphere **2267**, where the center of hemisphere **2267** is located at or near the focal point of incoming light (ray lines **2233**). The center of hemisphere **2267** also corresponds to, or nearly corresponds to, the center of the aperture **2244**. As shown in FIG. **22**D, hemisphere **2267** can be below aperture layer **2240**. In some other embodiments, hemisphere **2267** can be above aperture layer **2240**, as shown in FIG. **22**E.

FIG. **22**E is a simplified cross-sectional view diagram of an embodiment **2203** of a receiver channel **2232**, according to some embodiments of the present disclosure. Unlike embodiment **2202** in FIG. **22**D, embodiment **2215** in FIG. **2**E can be configured so that hemisphere **2267** is positioned above aperture **2244** to achieve similar functionality as embodiment **2202** but with a more compact footprint.

FIGS. **22**D and **22**E show convex hemisphere **2267** as being coated with optical filter **2261** and imprinted on aperture layer **2240** that is supported on a rigid optically transparent layer **2245** (e.g. glass, polymer) with aperture **2244** along with the corresponding optically non-transparent stop regions **2246**. As illustrated in FIGS. **22**D and **22**E, receiver channel **2232** includes sidewalls **2263** between optically transparent layer **2245** and photosensor layer **2270** with photodetectors **2271** to reduce crosstalk. Sidewalls **2263** can be made up of optically non-transparent material or made up of optically transparent material. In addition, sidewalls **2263** can also be coated with reflective or absorptive material. Note that, while not shown in FIGS. **22**D and **22**E, there may be refraction of rays **2233** entering and exiting the rigid optically transparent layer **2245**.

FIG. **22**F is a simplified cross-sectional view diagram of an embodiment **2204** of a receiver channel **2232**, according to some embodiments of the present disclosure. Embodiment **2204** can include a concave hemisphere **2267** made of optically transparent material (e.g. glass, polymer) with a coated optical filter **2261**. Self-supported aperture layer **2240** can overhang concave hemisphere **2267** and can be perforated or etched with an optically non-transparent rigid material (e.g. metal film) to form the optically non-transparent stop regions **2246**. As shown in FIG. **22**F, hemisphere **2267** can be positioned below aperture layer **2240**. The center of aperture **2244** can be located at or near the focal point of the incoming light (rays **2233**). Additionally, the center of the hemisphere **2267** can be located at or near the focal point of the incoming light (rays **2233**). As illustrated in FIG. **22**F, receiver channel **2232** includes sidewalls **2263** between optically transparent layer **2245** and photosensor layer **2270** with photodetectors **2271** to reduce crosstalk. Sidewalls **2263** can be made up of optically non-transparent material or made up of optically transparent material. In addition, sidewalls **2263** can also be coated with reflective or absorptive material.

FIG. **22**G is a simplified cross-sectional view diagram of an embodiment **2205** of receiver channel **2232**, according to some embodiments of the present disclosure. Unlike embodiment **2204** in FIG. **22**F, embodiment **2205** in FIG. **2**G can be configured so that hemisphere **2267** is positioned above aperture **2244** to achieve similar functionality as embodiment **2204**, but embodiment **2204** may have a more compact footprint.

FIG. **22**H is a simplified cross-sectional view diagram of an embodiment **2206** of receiver channel **2232**, according to some embodiments of the present disclosure. Receiver channel **2232** of embodiment **2206** can include a concave hemisphere **2267** and aperture layer **2240** supported by a rigid, optically transparent layer **2245**. In some embodiments, concave hemisphere **2267** can be below the aperture layer **2240** as shown in FIG. **22**H. Concave hemisphere **267** can be made of optically transparent material (e.g. glass, polymer) with a coated optical filter **2261**. Aperture layer **2240** with optically transparent aperture **2244** and corresponding optically non-transparent stop regions **244** is supported by optically transparent layer **2245** on both top and bottom sides of aperture layer **2240**. The center of aperture **2244** is located at or near the focal point of the incoming light (rays **2233**). Additionally, the center of concave hemisphere **2267** is located at or near the focal point of the incoming light (rays **2233**). As illustrated in FIG. **22**H, receiver channel

2232 includes sidewalls 2263 between optically transparent layer 2245 and photosensor layer 2270 with photodetectors 2271 to reduce cross-talk. Sidewalls 2263 can be made up of optically non-transparent material or made up of optically transparent material. In addition, sidewalls 2263 can also be coated with reflective or absorptive material.

FIG. 22I is a simplified cross-sectional view diagram of an embodiment 2207 of receiver channel 2232, according to some embodiments of the present disclosure. Unlike embodiment 2206 in FIG. 22H, embodiment 2207 in FIG. 21 can be configured so that hemisphere 2267 is positioned above aperture 2244 to achieve similar functionality as embodiment 2206.

F. Bottom Micro-Lens Layer

FIG. 23A is a simplified cross-sectional view diagram of an embodiment 2300 of a receiver channel 2332, according to some embodiments of the present disclosure. Receiver channel 2332 of embodiment 2300 can include a Bottom Micro-Lens Layer (BMLL), which consists of one or more micro-lenses 2391 that are configured to guide divergent light rays into active portion of the photosensors. The BMLL performs ray angle correction to guide light from dissimilar angles into evenly spaced photosensors. Ray angle correction can be achieved by controlling the lateral offset between lens center and the photosensor center, tilting of the lens, or adjusting the form of the lens. A better illustration of this operation can be seen in FIG. 23B.

FIG. 23B is a simplified cross-sectional view diagram of a close-up view of the propagation of light during ray angle correction by a BMLL, according to some embodiments of the present disclosure. As illustrated, the pitch of the micro-optics is either not constant or is not equal to the pitch of lenses 2391 in order to steer the divergent rays (2333) to active portions of photodetectors 2371 in the photosensor layer. With reference back to FIG. 23A, each micro-lens 2391 can be positioned to correspond with a respective photodetector 2371.

FIG. 23C is a simplified cross-sectional view diagram of an embodiment 2301 of a receiver channel 2332, according to some embodiments of the present disclosure. Receiver channel 2332 of embodiment 2301 can include a single micro-lens 2391, instead of a plurality of micro-lenses as shown in FIG. 23A. Single micro-lens 2391 can be positioned over and centered to a single photodetector 2371. Micro-lens 2391 can be configured to guide light to single photodetector 2371.

FIGS. 23D and 23E is a simplified cross-sectional view diagram of embodiments 2302 and 2303, respectively, of a receiver channel 2332, according to some embodiments of the present disclosure. Receiver channel 2332 of embodiment 2302 can include a BMLL positioned on the underside of an optically transparent layer 2345 supporting aperture layer 2340 and hemisphere 2367 with optical filter 2361 coated. As shown in FIG. 23D, the BMLL can be formed of multiple lenses 2393 for guiding divergent light to multiple photodetectors 2371. As shown in FIG. 23E, the BMLL can be formed of a single micro-lens 2391 for guiding divergent light to photodetector 2371.

Embodiments 2302 and 2303 in FIGS. 23D and 23E each include a convex hemisphere 2367 supported on a rigid optically transparent layer 2345. In these illustrations, an aperture layer 2340 is combined with an optical filter 2361 coated on hemisphere 2367, where the center of hemisphere 2367 is located at or near the focal point of incoming light (marginal ray lines 2333). The center of hemisphere 2367 can also correspond to, or nearly correspond to, the center of aperture 2344. Convex hemisphere 2367 can be coated with optical filter 2361 and imprinted on aperture layer 2340 that is supported on rigid optically transparent layer 2345 (e.g. layer formed of glass, polymer) and the corresponding optically non-transparent stop regions 2346. As illustrated in FIGS. 23D and 23E, receiver channel 2332 includes sidewalls 2363 between optically transparent layer 2345 and photosensor layer 2370 to reduce crosstalk. Sidewalls 2363 can be made up of optically non-transparent material or made up of optically transparent material. In addition, sidewalls 2363 can also be coated with reflective or absorptive material.

G. Additional Exemplary Receiver Channels

It is to be appreciated that a receiver channel is a structure at the micro-optic level, e.g., a micro-optic receiver channel discussed above, that can be formed from multiple layers including one or more of an aperture layer, an optical lens layer below the aperture layer, an optical filter layer below the aperture and optical lens layer, and a photosensor layer below all the other layers. Each such layer can be configured in various ways to mitigate cross-talk. i.e., exposing stray light to adjacent receiver channels, as discussed herein with respect to FIGS. 17-23E. Various examples of receiver channels are discussed above with respect to FIGS. 17, 22A-22I, and 23A-23E. Two other examples of receiver channels according to the present disclosure are illustrated in FIGS. 24 and 25. Embodiments of the present disclosure are not limited to the particular receiver channels described herein. Instead, based on the present disclosure a person of skill in the art will appreciate that in other embodiments a receiver channel according to the disclosure can include, among other options, an aperture layer as described above with respect to any of FIG. 18A-18D or 19A-19D, a filter layer as described above with respect to any of FIGS. 20A-20G, and/or a photosensor layer as described above with respect to any of FIGS. 21A-21K.

FIG. 24 is a simplified cross-sectional view diagram of an exemplary embodiment of a receiver channel 2400, according to some embodiments of the present disclosure. Receiver channel 2400 can include an aperture layer 2440 composed of first and second apertures 2444, each formed in respective optically non-transparent layers 2446*a* and 2446*b*. First and/or second apertures 2444 can be formed of void space defined by openings within layers 2446*a* and 2446*b* in some embodiments, while first and/or second apertures 2444 can be formed by optically transparent materials in some other embodiments. First and second optically non-transparent layers 2446*a* and 2446*b* can be supported by an optically transparent substrate 2445 sandwiched between first and second optically non-transparent layers 2446*a* and 2446*b*.

Receiver channel 2400 can also include an optical lens layer 2450 disposed below aperture layer 2440. Optical lens layer 2450 can include a collimating lens 2451 and an optically non-transparent spacer structure 2456. Collimating lens 2451 can be separated from aperture layer 2440 by optically non-transparent spacer structure 2456. In some embodiments, optically non-transparent spacer structure 2456 forms a tube having a circumference that surrounds collimating lens 2451 and extends toward aperture layer 2440. Optically non-transparent spacer structure 2456 can be formed of an optically reflective or absorptive material that prevents any light from traveling outside of receiver channel 2400 in the region between aperture layer 2440 and collimating lens 2451.

In addition to aperture layer 2440 and optical lens layer 2450, receiver channel 2400 can further include an optical filter layer 2460 positioned directly below optical lens layer 2450. Optical filter layer 2460 can include two optical filters

2461 sandwiching an optically transparent substrate 2465 that structurally supports optical filters 2461. Optical filter layer 2460 can contain any number and type of optical filters 2461 on any number of substrates 2065. For instance, one of optical filters 2461 can be a bandpass filter and be positioned on either on top of or directly below optically transparent substrate 2465 that blocks all of the incident light for a defined set of wavelengths (e.g. 900-945 nm and 950-995 nm). The other optical filter 2461 placed on the opposite side of optically transparent substrate 2465 can be a different filter, such as a wide spectrum blocking filter (except for the region covered by the bandpass filter), for example covering 200-915 nm and 980-1600 nm. The bandpass filter and blocking filter are designed such that there is no leakage in the transition region between the two filters. However, the filters could be two edge pass filters designed to work in conjunction as a bandpass filter or any other type of filter.

Immediately below optical filter layer 2460 can be a photosensor layer 2470. In some embodiments, photosensor layer 2470 of embodiment 2400 can include an optically non-transparent spacer structure 2463 positioned between a converging lens set 2491 and a photosensor 2473. Photosensor 2473 can be formed of a set of discrete photodetectors 2471 (e.g., SPADs) positioned between a set of inactive regions 2172 (e.g., integrated logic) in an alternating arrangement, where each discrete photodetector is configured to detect incident photons. Converging lens set 2491 can be interposed between optical filter layer 2460 and photosensor 2473 with photodetectors 2471, and including one converging lens 2491 per discrete photodetector 2471 within photosensor 2173, where each lens of the converging lens set 2491 is configured to focus incident photons passed by optical filter layer 2460 onto a corresponding discrete photodetector 2471. Each converging lens can exhibit a common focal length, and converging lens set 2491 can be offset above the sensing plane of the photosensor by this common focal length (or by a distance substantially similar to this common focal length), and each converging lens can converge incident light—collimated in optical lens layer 2450 and passed by optical filter layer 2460—onto one corresponding photodetector 2471 in photosensor 2473. Optically non-transparent spacer structure 2463 forms a tube of substantially similar or larger diameter to a collimating lens 2451 and prevents any light from traveling outside of receiver channel 2400 in the region between lens set 2491 and photosensor 2473. Optically non-transparent spacer structure 2163 could be made from optically non-transparent bulk media (e.g. silicon or polymer).

Another exemplary embodiment of a receiver channel is shown in FIG. 25. FIG. 25 is a simplified cross-sectional view diagram of an exemplary receiver channel 2500, according to some embodiments of the present disclosure. Receiver channel 2500 can include an aperture layer 2540, an optical lens layer 2550 disposed below aperture layer 2540, and an optical filter layer 2560 below both aperture layer 2540 and optical lens layer 2550. Aperture layer 2540, optical lens layer 2550, and optical filter layer 2560 can have the same construction and function as corresponding components in FIG. 24.

Receiver channel 2500 can also include a photosensor layer 2570 positioned immediately below optical filter layer 2560. In some embodiments, photosensor layer 2570 of embodiment 2400 can include an optically non-transparent spacer structure 2563, a converging lens set 2591, and a photosensor 2573. Unlike converging lens set 2491 of receiver channel 2400 in FIG. 24, converging lens set 2591 of receiver channel 2500 can be positioned directly on at top surface of photosensor 2573 instead of directly on an underside of optical filter layer 2560. Furthermore, optically non-transparent spacer structure 2563 can be formed of an optically non-transparent material (e.g., black chrome) coated on an optically transparent layer, such as a silicon or glass substrate, instead of being a solid optically non-transparent structure, e.g., optically non-transparent spacer structure 2463 of receiver channel 2400 in FIG. 24. Lens set 2591 serves to focus light onto photodetectors 2571 of photosensor 2573, rather than inactive areas 2572.

By implementing a receiver channel according to any of embodiments 2400 and 2500, errant light can be prevented from exposing on adjacent receiver channels, thereby improving the accuracy of each photosensor's ability to capture photons for imaging.

VI. Micro Optical Receiver Channel Array Variations

According to some embodiments of the present disclosure, micro-optical receiver channels can be organized in an array. The array can have various dimensions according to design. For instance, an array of micro-optical receiver channels can be arranged in a M×N array where M and N are equal to or greater than 1. Accordingly, micro-optical receiver channels can be one- and two-dimensional arrays, as will be discussed furthered herein with respect to FIGS. 26-30, which illustrate different embodiments of micro-optical receiver channel arrays where each dot represents a micro-optical receiver channel. As aforementioned herein, each receiver channel can include a plurality of layers stacked upon each other. Thus, it can be appreciated that when arranged in an array, each micro-optic receiver channel is part of a monolithic layer composed of the individual elements reproduced many times in the M×N arrangement, e.g., an M×N aperture layer array, an M×N micro lens layer array, and an M×N photosensor layer array. When bonded together, these array layers create a monolithic multi-channel micro optical receiver array.

FIG. 26 is a simplified illustration of an exemplary micro-optical receiver array 2600, according to some embodiments of the present disclosure. Micro-optical receiver array 2600 is configured as a linear (M×1) array, specifically a 16×1 array. This layout can achieve a high resolution (e.g. 16×1024) as the implementation is amenable to scanning the array in one dimension. As an example, for a receiver channel pitch of 500 microns the layout illustrated can be implemented in a chip of a size that is approximately 500 microns by 8000 microns.

FIG. 27 is a simplified illustration of an exemplary micro-optical receiver array 2700, according to some embodiments of the present disclosure. Micro-optical receiver array 2700 is configured as a rectangular (M×N) array, specifically a 16×32 array. Thus, for a receiver channel pitch of 500 microns the layout illustrated can be implemented in a chip of size 8,000 microns by 12000 microns.

FIG. 28 is a simplified illustration of an exemplary micro-optical receiver array 2800, according to some embodiments of the present disclosure. Micro-optical receiver array 2800 is configured as an M×N staggered array. In this illustration, receiver channels 2832 are laid out in a 16×4 staggered array. This layout can achieve a high resolution (e.g. 64×1024) as the implementation is amenable to sweeping. For a receiver channel pitch of 500 microns the layout illustrated in FIG. 28 can be implemented in a chip of a size that is approximately 2000 microns by 8375 microns.

FIG. 29 is a simplified illustration of an exemplary micro-optical receiver array 2900, according to some embodiments of the present disclosure. Micro-optical receiver array 2900 is configured as a warped linear (M×1)

array. In this embodiment, the spacing between receiver channels **2932** is uneven. Receiver channels near the center, shown as **2932-01**, are placed close together (e.g. 400 microns apart), while the exterior channels, shown as **2932-02**, are placed farther apart (e.g., greater than 400 microns apart), or vice versa. This layout has an advantage of being able to allow for correction of the distortion curve of a lens (i.e. the angles between the receiver channel fields of view are evenly spaced in the object space). The arrangement shown in FIG. **29** can be used to achieve a high resolution (e.g. 16×1024) as the implementation is amenable to sweeping. For an average receiver channel pitch of 500 microns the layout illustrated can be implemented in a chip of a size that is approximately 500 microns by 8000 microns.

In some embodiments, the receiver channels can be configured in a M×N warped array (where N≥1). In such embodiments, the receiver channels in the center are placed further from each other in both the x and y direction than the exterior receiver channels. This corrects for another possible form of lens distortion.

FIG. **29** is a simplified illustration of an exemplary micro-optical receiver array **2900**, according to some embodiments of the present disclosure. Micro-optical receiver array **2900** is configured in an arbitrary pattern. This layout arrangement has the advantage of being able to accommodate lens distortion, to make adjustments to compensate for any timing or routing variations, and also to match an arbitrary pattern from an illumination source.

Although the present disclosure has been described with respect to specific embodiments, it will be appreciated that the present disclosure is intended to cover all modifications and equivalents within the scope of the following claims.

What is claimed is:

1. An optical system for performing distance measurements, the optical system comprising:

a stationary housing having an optically transparent window;

a spinning light ranging device disposed within the housing, the light ranging device comprising:

a platform;

an optical transmitter coupled to the platform, the optical transmitter comprising a bulk transmitter optic and a plurality of transmitter channels, each transmitter channel including a light emitter configured to generate and transmit a narrowband light through the bulk transmitter optic into a field external to the optical system; and

an optical receiver coupled to the platform, the optical receiver comprising a bulk receiver optic, an aperture layer coincident with a focal plane of the bulk receiver optic and comprising a plurality of apertures separated by a stop region, and a plurality of micro-optic receiver channels, each micro-optic channel including an aperture from the plurality of apertures, an optical filter positioned along a path of light from the bulk receiver optic and axially aligned with the aperture, and a photosensor responsive to incident photons passed through the aperture and the optical filter;

a motor disposed within the housing and operatively coupled to spin the light ranging device including the platform, optical transmitter, and optical receiver within the housing; and

a system controller disposed within the housing, the system controller configured to control the motor and to start and stop light detection operations of the light ranging device.

2. The optical system set forth in claim **1** wherein the optical receiver further includes a collimating lens behind the aperture and directly coupled to the optical filter, the optical filter positioned behind the collimating lens.

3. The optical system set forth in claim **1** wherein the optical filter is a filter layer on a hemispherical lens positioned directly on a top or bottom side of the aperture.

4. The optical system set forth in claim **1** wherein the stationary housing is cylindrical in shape and the optically transparent window extends fully around a periphery of the stationary housing.

5. The optical system set forth in claim **4** further comprising a corrective optical structure to correct for optical aberrations caused by the transparent window.

6. The optical system set forth in claim **1** wherein the optical transmitter and optical receiver are configured such that each transmitter channel is paired with a receiver channel and the centers of their fields-of-view are aligned to be non-overlapping at a certain distance from the optical system.

7. The optical system set forth in claim **1** wherein the plurality of micro-optic receiver channels are part of a monolithic ASIC constructed on a common substrate, within which photosensors are fabricated, and separate layers for the aperture layer, and the optical filter are formed on the monolithic ASIC such that they become part of the monolithic structure of the ASIC.

8. An optical system for performing distance measurements, the optical system comprising:

a stationary housing having a base, a top and an optically transparent window disposed between the base and the top;

a spinning light ranging device disposed within the housing and aligned with the optically transparent window, the light ranging device comprising:

a platform;

an optical transmitter coupled to the platform, the optical transmitter comprising an image-space telecentric bulk transmitter optic and a plurality of transmitter channels, each channel including a light emitter configured to generate and transmit a narrowband light through the bulk transmitter optic into a field external to the optical system; and

an optical receiver coupled to the platform, the optical receiver comprising an image-space telecentric bulk receiver optic, an aperture layer comprising a plurality of apertures separated by a stop region, and a plurality of micro-optic receiver channels, each micro-optic channel including an aperture from the plurality of apertures coincident with a focal plane of the bulk receiver optic, a collimating lens behind the aperture, an optical filter behind the collimating lens and a photosensor responsive to incident photons passed through the aperture into the collimating lens and through the filter;

a motor disposed within the housing and operatively coupled to spin the light ranging device including the platform, optical transmitter and optical receiver within the housing;

a system controller disposed within the housing, the system controller configured to control the motor and to start and stop light detection operations of the light ranging device.

9. The optical system set forth in claim **8** wherein the stationary housing is cylindrical in shape and the optically transparent window extends fully around a periphery of the stationary housing.

10. The optical system set forth in claim 8 wherein the optical transmitter and optical receiver are configured such that each transmitter channel is paired with a receiver channel and the centers of their fields-of-view are aligned to be non-overlapping at a certain distance from the optical system.

11. The optical system set forth in claim 8 wherein the plurality of micro-optic receiver channels are part of a monolithic ASIC constructed on a common substrate, within which photosensors are fabricated, and separate layers for the aperture layer, and the optical filter are formed on the monolithic ASIC such that they become part of the monolithic structure of the ASIC.

12. An optical system for performing distance measurements, the optical system comprising:

a stationary housing having a base, a top and an optically transparent window disposed between the base and the top;

a light ranging device disposed within the housing and aligned with the optically transparent window, the light ranging device comprising:

a platform;

a plurality of vertical-cavity surface emitting lasers (VCSELs) arranged in an array, each VCSEL in the plurality of VCSELs being configured to generate and transmit discrete pulses of light into a field external to the optical system; and

an optical receiver coupled to the platform, the optical receiver comprising a bulk receiver optic, an aperture layer comprising a plurality of apertures separated by a stop region, a plurality of photosensors, each photosensor comprising a plurality of single-photon avalanche diodes (SPADs) responsive to incident photons, and an optical filter disposed between the bulk receiver optic and the plurality of photosensors and configured to allow a band of light to pass through the filter to the plurality of photosensors while blocking light outside the band from reaching the plurality of photosensors;

wherein the plurality of apertures comprises at least first and second apertures, the plurality of photosensors comprises at least first and second photosensors, and the optical receiver includes a first optical path extending between the bulk receiver optic and the first photosensor through the first aperture and a second optical path extending between the bulk receiver optic and the second photosensor through the second aperture;

a motor disposed within the housing and operatively coupled to spin the light ranging device within the housing; and

a system controller disposed within the housing, the system controller configured to control the motor and to start and stop light detection operations of the light ranging device.

13. The optical system set forth in claim 12 wherein the stationary housing is cylindrical in shape and the optically transparent window extends fully around a periphery of the stationary housing.

14. The optical system set forth in claim 12 wherein the plurality of VCSELs are arranged to form a plurality of emitter channels having non-overlapping fields of view at a certain distance from the optical system and the plurality of photosensors are arranged to form a plurality of receiver channels having non-overlapping fields of view at a certain distance from the optical system, and wherein each transmitter channel is paired with a separate one of the receiver channels.

15. The optical system set forth in claim 14 wherein the system generates distance data based on times between transmission of pulses of light from the plurality of emitter channels and detection of photons from the pulses of light by the plurality of photosensors.

16. The optical system set forth in claim 14 further comprising a bulk transmitter optic and wherein:

the bulk transmitter optic and the bulk receiver optic are each image-space telecentric optics; and

the plurality of emitter channels are configured to project a plurality of illuminating beams in the field external to the optical system according to an illumination pattern that substantially matches, in size and geometry across a range of distances from the system, a plurality of non-overlapping fields of view of the plurality of photosensors.

17. The optical system set forth in claim 12 wherein the plurality of photosensors are fabricated within, and form part of, a monolithic ASIC constructed on a common substrate.

18. The optical system set forth in claim 12 wherein the first and second apertures are pinhole apertures.

19. The optical system set forth in claim 12 wherein the discrete pulses of light are each coded with an embedded positive-value pulse-code formed by an intensity of its respective pulse of light.

20. The optical system set forth in claim 12 wherein the plurality of apertures further comprises third and fourth apertures, the plurality of photosensors further comprises third and fourth photosensors, and the optical receiver includes a third optical path extending between the bulk receiver optic and the third photosensor through the third aperture and a fourth optical path extending between the bulk receiver optic and the fourth photosensor through the fourth aperture.

21. An optical system for performing distance measurements, the optical system comprising:

a stationary housing having a base, a top and an optically transparent window disposed between the base and the top and extending fully around a periphery of the stationary housing;

a light ranging device disposed within the housing and comprising:

a platform;

a light transmission module coupled to the platform and comprising a bulk transmitter optic and a plurality of optical emitters, each optical emitter in the plurality of optical emitters configured to generate and transmit pulses of radiation through the bulk transmitter optic and through the optically transparent window into a field external to the optical system; and

a light sensing module coupled to the platform and comprising a bulk receiver optic, an aperture layer comprising a plurality of apertures separated by a stop region, a plurality of photosensors operable to detect photons emitted from the plurality of optical emitters and received through the bulk receiver optic after being reflected from surfaces within the field, and an optical filter disposed between the bulk receiver optic and the plurality of photosensors and configured to allow a band of radiation, including an operating wavelength of the plurality of optical emitters, to pass through the filter to the plurality of

photosensors while blocking radiation outside the band from reaching the plurality of photosensors; and

a motor disposed within the housing and operatively coupled to spin the platform and the light ranging device within the housing;

wherein:

each photosensor in the plurality of photosensors comprises a plurality of single photon avalanche diodes (SPADs);

the plurality of apertures comprises at least first, second, third and fourth apertures;

the plurality of photosensors comprises at least first, second, third and fourth photosensors; and

the light sensing module includes a first optical path to the first photosensor through the first aperture, a second optical path to the second photosensor through the second aperture, a third optical path to the third photosensor through the third aperture, and a fourth optical path to the fourth photosensor through the fourth aperture.

22. The optical system for performing distance measurements according to claim **21** wherein the bulk transmitter optic and the bulk receiver optic are each image-space telecentric optics.

23. The optical system for performing distance measurements according to claim **21** wherein the system generates distance data based on times between transmission of pulses of light from the plurality of optical emitters and detection of photons from the pulses of light by the plurality of photosensors.

24. The optical system for performing distance measurements according to claim **21** wherein the plurality of optical emitters are arranged to form a plurality of emitter channels having non-overlapping fields of view, and the plurality of photosensors are arranged to form a plurality of receiver channels having non-overlapping the fields of view and having a one-to-one relationship with the plurality of emitter channels such that the field of view for each receiver channel is coincident with the field of view of a corresponding emitter channel.

25. The optical system for performing distance measurements according to claim **21** wherein the plurality of emitters are configured to project a plurality of illuminating beams in the field external to the optical system according to an illumination pattern that substantially matches, in size and geometry across a range of distances from the system, a plurality of non-overlapping fields of view of the plurality of photosensors.

26. An optical system for performing distance measurements, the optical system comprising:

a stationary housing having a base, a top and an optically transparent window disposed between the base and the top and extending fully around a periphery of the stationary housing;

a light ranging device disposed within the housing and comprising:

a platform;

a light transmission module coupled to the platform and comprising a bulk transmitter optic and a plurality of optical emitters, each optical emitter in the plurality of optical emitters configured to generate and transmit pulses of radiation through the bulk transmitter optic and through the optically transparent window into a field external to the optical system; and

a light sensing module coupled to the platform and comprising a bulk receiver optic, an aperture layer comprising a plurality of apertures separated by a stop region, a plurality of photosensors operable to detect photons emitted from the plurality of optical emitters and received through the bulk receiver optic after being reflected from surfaces within the field, and one or more optical filters disposed between the bulk receiver optic and the plurality of photosensors, each of the one or more optical filters configured to allow a set of wavelengths of radiation, including an operating wavelength of the plurality of optical emitters, to pass through the one or more optical filters while blocking radiation outside that set; and

a motor disposed within the housing and operatively coupled to spin the platform and the light ranging device within the housing;

wherein:

each photosensor in the plurality of photosensors comprises a plurality of single photon avalanche diodes (SPADs);

the plurality of apertures comprises at least first, second, third and fourth apertures;

the plurality of photosensors comprises at least first, second, third and fourth photosensors; and

the light sensing module includes a first optical path to the first photosensor through the first aperture, a second optical path to the second photosensor through the second aperture, a third optical path to the third photosensor through the third aperture, and a fourth optical path to the fourth photosensor through the fourth aperture.

27. The optical system for performing distance measurements set forth in claim **26** wherein the one or more optical filters comprise a bandpass filter.

28. The optical system for performing distance measurements set forth in claim **26** wherein the one or more optical filters comprise a plurality of optical filters.

29. The optical system for performing distance measurements set forth in claim **28** wherein each of the plurality of optical filters is supported by an optically transparent substrate.

30. The optical system for performing distance measurements set forth in claim **29** wherein the plurality of optical filters are disposed in the first optical path.

31. The optical system for performing distance measurements according to claim **26** wherein the system generates distance data based on times between transmission of pulses of light from the plurality of optical emitters and detection of photons from the pulses of light by the plurality of photosensors.

32. The optical system for performing distance measurements according to claim **26** wherein the plurality of optical emitters are arranged to form a plurality of emitter channels having non-overlapping fields of view, and the plurality of photosensors are arranged to form a plurality of receiver channels having non-overlapping fields of view and having a one-to-one relationship with the plurality of emitter channels such that the field of view for each receiver channel is coincident with the field of view of a corresponding emitter channel.

33. The optical system for performing distance measurements according to claim **26** wherein the plurality of emitters are configured to project a plurality of illuminating beams in the field external to the optical system according to an illumination pattern that substantially matches, in size and geometry across a range of distances from the system, a plurality of non-overlapping fields of view of the plurality of photosensors.

34. The optical system for performing distance measurements according to claim **26** wherein the one or more optical filters comprises a first optical filter disposed in the first optical path between the first photosensor and the first aperture, a second optical filter disposed in the second optical path between the second photosensor and the second aperture, a third optical filter disposed in the third optical path between the third photosensor and the third aperture, and a fourth optical filter disposed in the fourth optical path between the fourth photosensor and the fourth aperture.

* * * * *