US010605984B2

(12) **United States Patent**
Droz et al.

(10) **Patent No.: US 10,605,984 B2**
(45) **Date of Patent: Mar. 31, 2020**

(54) **ARRAY OF WAVEGUIDE DIFFUSERS FOR LIGHT DETECTION USING AN APERTURE**

(71) Applicant: **Waymo LLC**, Mountain View, CA (US)

(72) Inventors: **Pierre-Yves Droz**, Los Altos, CA (US); **David Hutchison**, Santa Clara, CA (US)

(73) Assignee: **Waymo LLC**, Mountain View, CA (US)

(*) Notice: Subject to any disclaimer, the term of this patent is extended or adjusted under 35 U.S.C. 154(b) by 598 days.

(21) Appl. No.: **15/366,746**

(22) Filed: **Dec. 1, 2016**

(65) **Prior Publication Data**

US 2018/0156971 A1 Jun. 7, 2018

(51) **Int. Cl.**

G01C 3/08	(2006.01)
G02B 6/08	(2006.01)
G02B 19/00	(2006.01)
G01S 17/89	(2020.01)
G02B 27/09	(2006.01)
G01S 7/481	(2006.01)
G02B 5/00	(2006.01)

(52) **U.S. Cl.**

CPC ***G02B 6/08*** (2013.01); ***G01S 7/4816*** (2013.01); ***G01S 17/89*** (2013.01); ***G02B 5/003*** (2013.01); ***G02B 5/005*** (2013.01); ***G02B 19/0014*** (2013.01); ***G02B 19/0076*** (2013.01); ***G02B 27/0994*** (2013.01)

(58) **Field of Classification Search**

CPC G02B 27/0994; G02B 19/0014; G02B 19/0076; G02B 5/003; G02B 5/005; G02B 6/08; G01S 17/89; G01S 7/4816

See application file for complete search history.

(56) **References Cited**

U.S. PATENT DOCUMENTS

5,391,869	A	2/1995	Ade et al.
8,190,030	B2	5/2012	Leclair et al.
9,256,007	B2	2/2016	Vasylyev
9,322,992	B2	4/2016	Woodward et al.
9,360,554	B2	6/2016	Retterath et al.
9,992,477	B2 *	6/2018	Pacala G02B 27/2214
2004/0232430	A1	11/2004	Lempkowski et al.
2009/0147239	A1	6/2009	Zhu et al.
2015/0219834	A1	8/2015	Nichol et al.
2016/0259038	A1	9/2016	Retterath

OTHER PUBLICATIONS

International Search Report and Written Opinion dated Mar. 22, 2018 for PCT/US2017/064104.

* cited by examiner

Primary Examiner — Samantha K Abraham

(74) *Attorney, Agent, or Firm* — McDonnell Boehnen Hulbert & Berghoff LLP

(57) **ABSTRACT**

The present disclosure relates to limitation of noise on light detectors using an aperture. One example implementation includes a system. The system includes a lens that focuses light from a scene toward a focal plane. The system also includes an aperture defined within an opaque material. The system also includes a plurality of waveguides. A given waveguide of the plurality has an input end that receives a portion of light transmitted through the aperture, and guides the received portion toward an output end of the given waveguide. A cross-sectional area of the guided portion at the output end is greater than a cross-sectional area of the received portion at the input end. The system also includes an array of light detectors that detects the guided light transmitted through the output end.

20 Claims, 6 Drawing Sheets

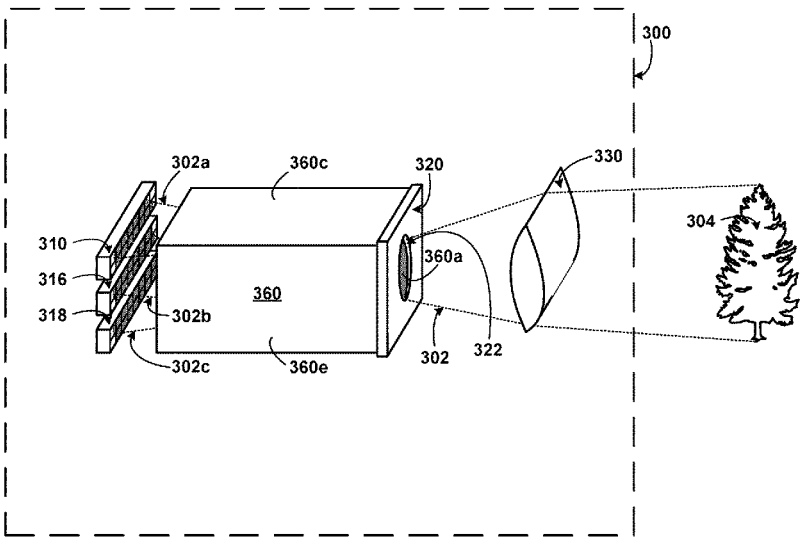

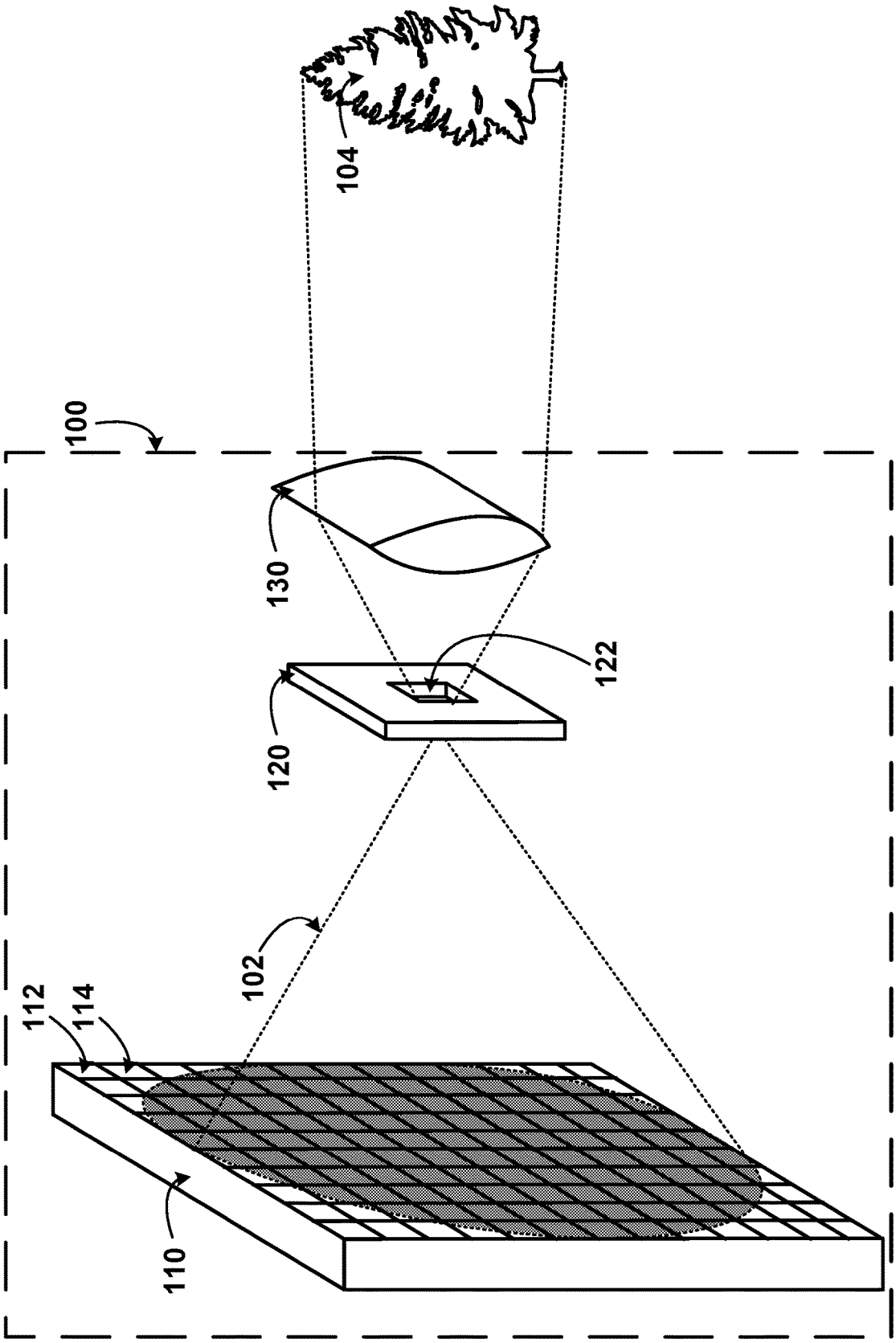

FIG. 1A

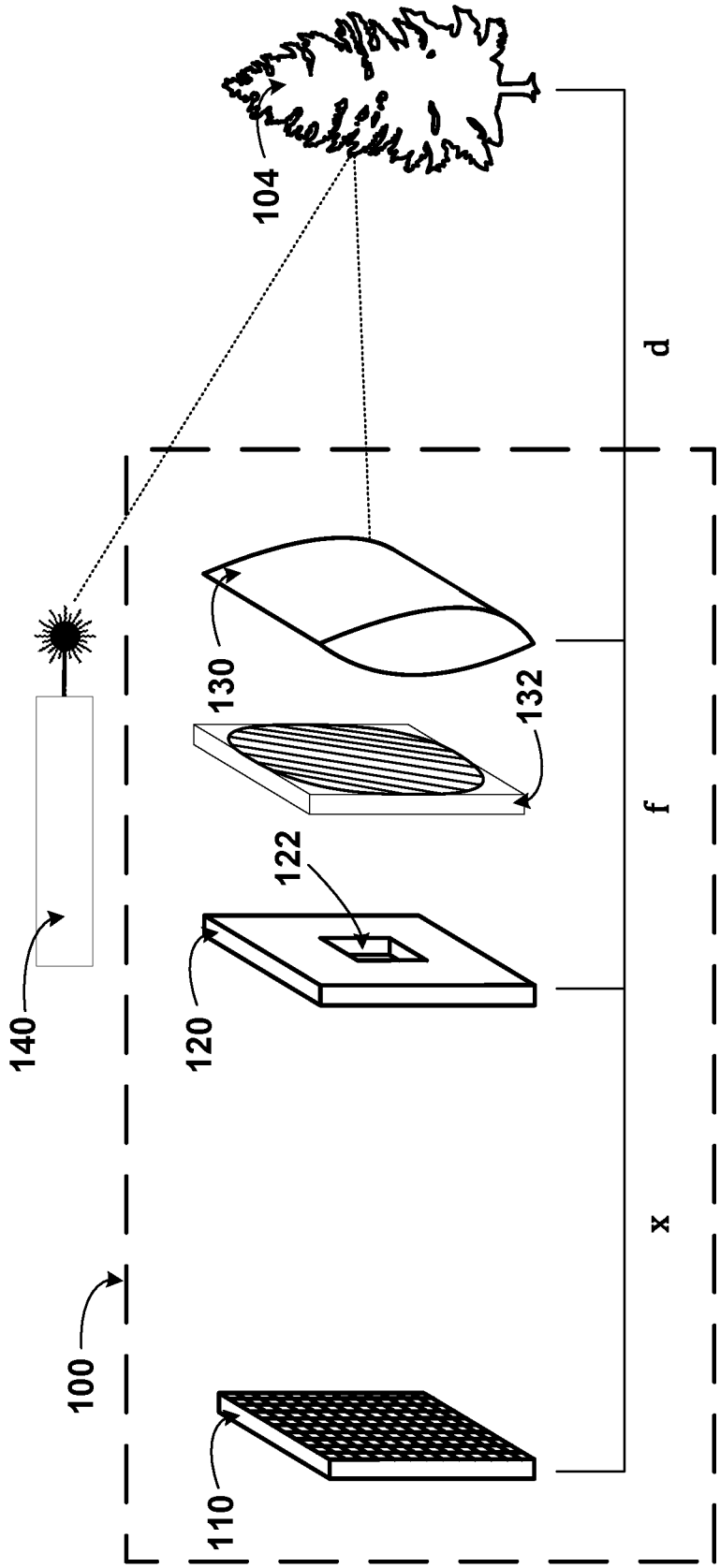

FIG. 1B

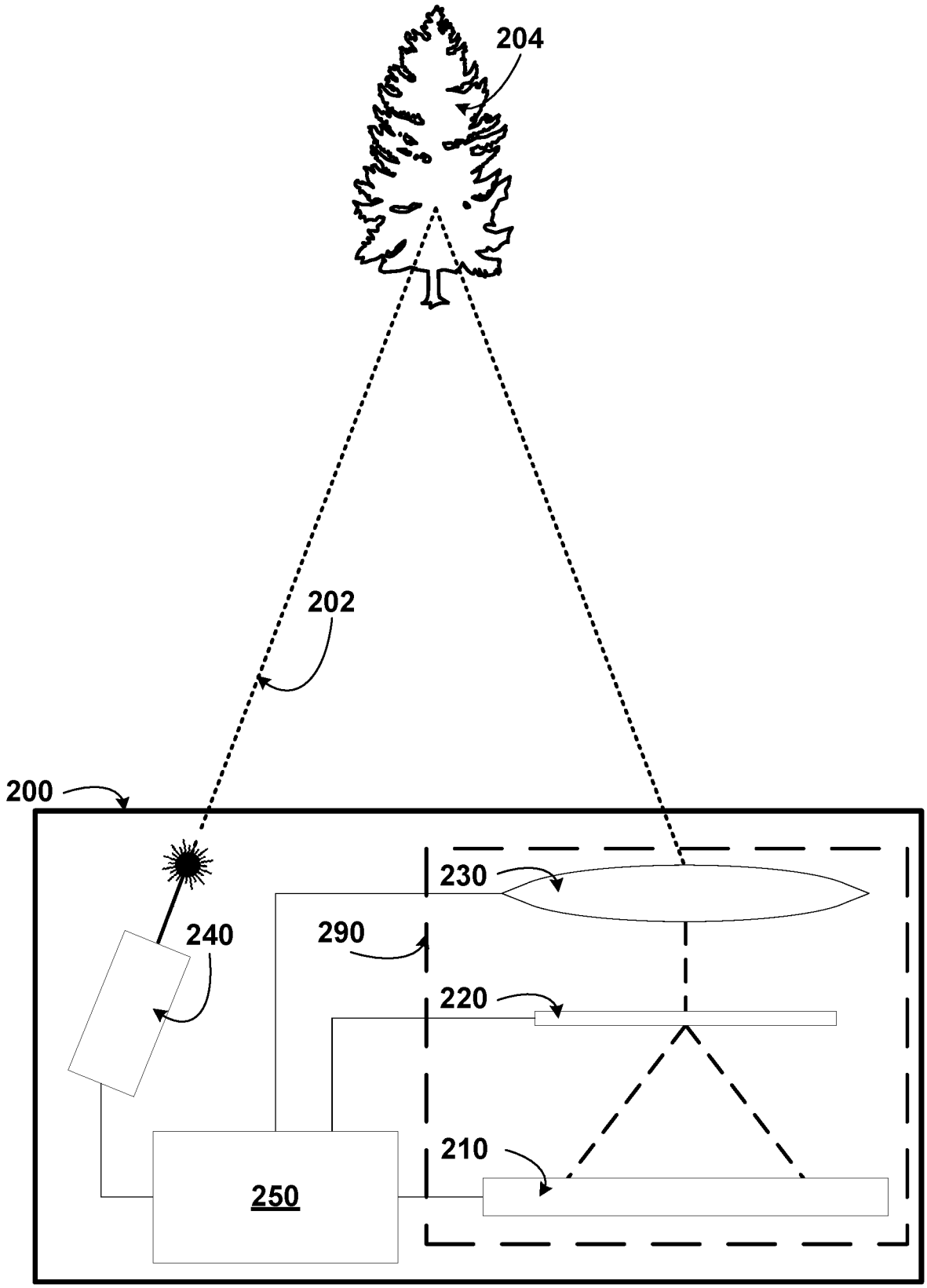

FIG. 2

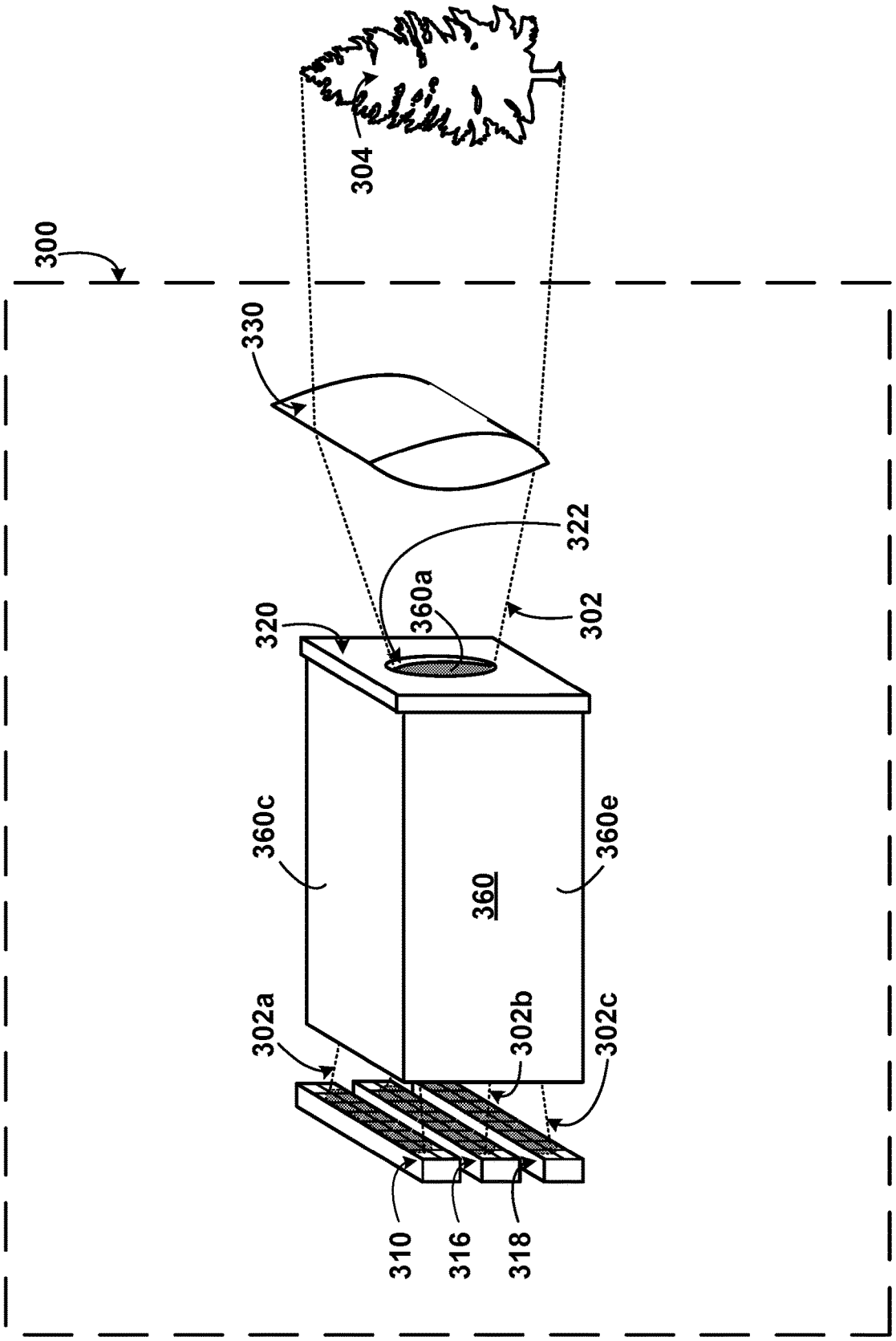
300
304
330
322
360a
320
302
360c
360
360e
302a
302b
302c
310
316
318

FIG. 3A

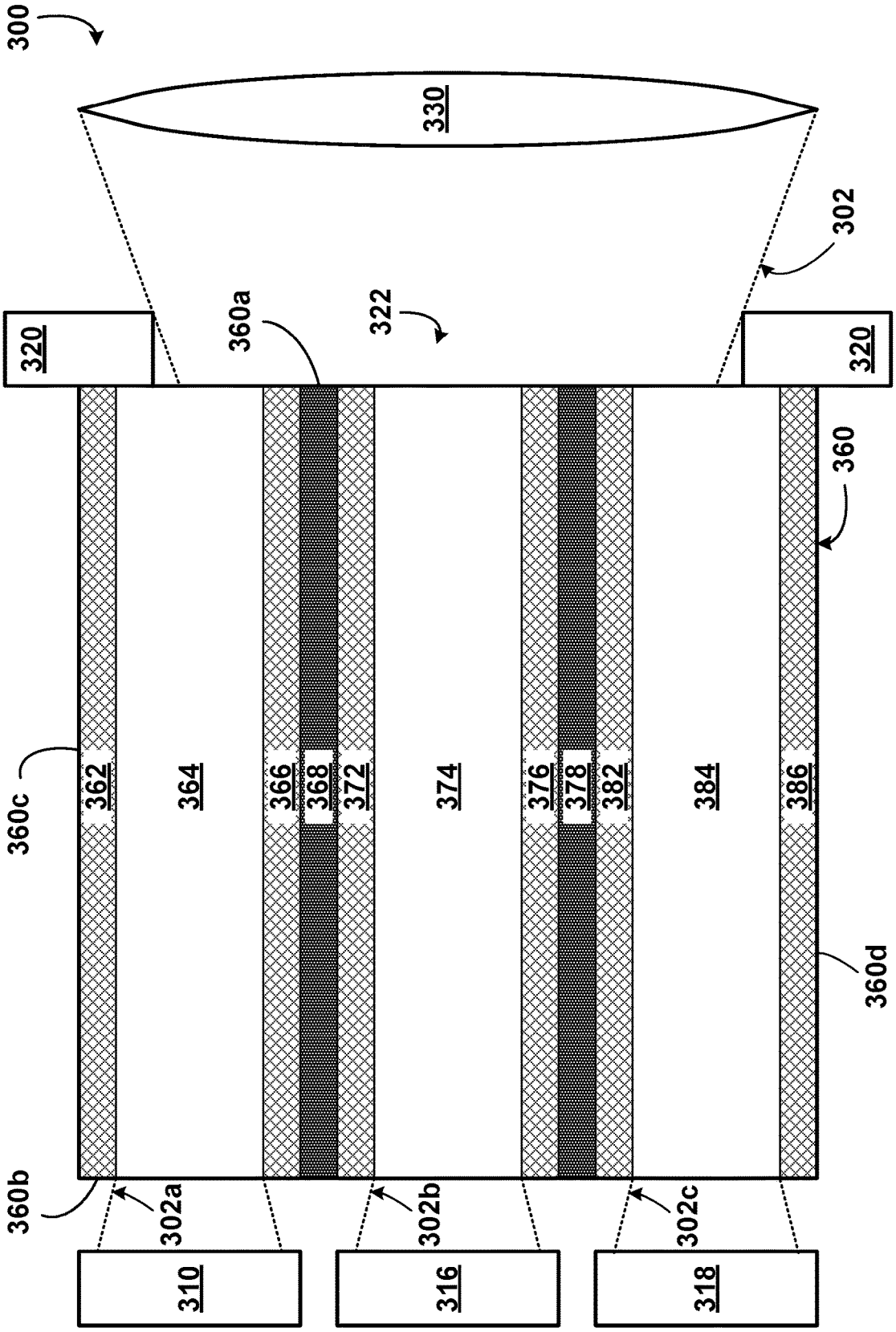
300
330
302
320
360a
322
320
360
360c
362
364
366
368
372
374
376
378
382
384
386
360d
360b
302a
302b
302c
310
316
318

FIG. 3B

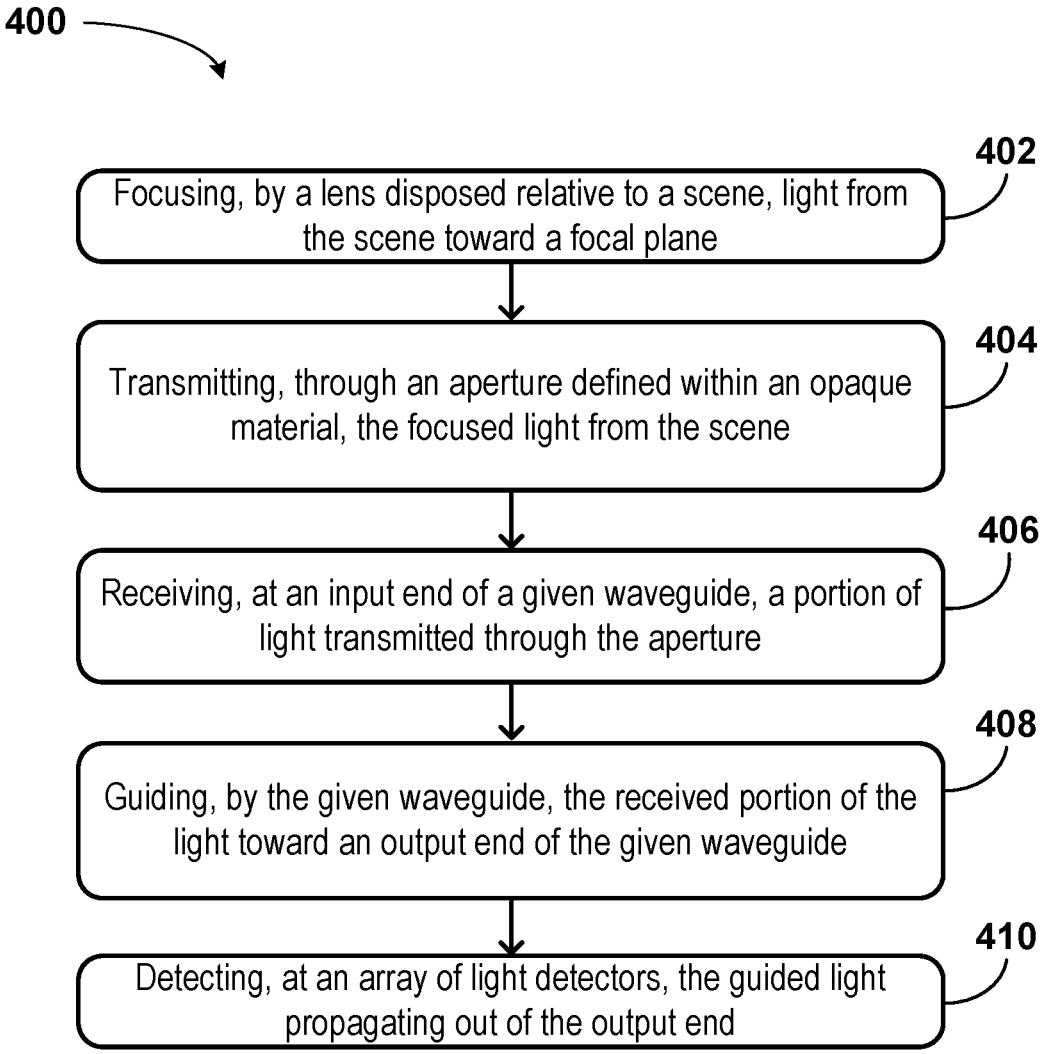
400
402
Focusing, by a lens disposed relative to a scene, light from the scene toward a focal plane
404
Transmitting, through an aperture defined within an opaque material, the focused light from the scene
406
Receiving, at an input end of a given waveguide, a portion of light transmitted through the aperture
408
Guiding, by the given waveguide, the received portion of the light toward an output end of the given waveguide
410
Detecting, at an array of light detectors, the guided light propagating out of the output end

FIG. 4

ARRAY OF WAVEGUIDE DIFFUSERS FOR LIGHT DETECTION USING AN APERTURE

BACKGROUND

Unless otherwise indicated herein, the materials described in this section are not prior art to the claims in this application and are not admitted to be prior art by inclusion in this section.

Light detectors, such as photodiodes, single photon avalanche diodes (SPADs), or other types of avalanche photodiodes (APDs), can be used to detect light that is imparted on their surfaces (e.g., by outputting an electrical signal, such as a voltage or a current, corresponding to an intensity of the light). Many types of such devices are fabricated out of semiconducting materials, such as silicon. In order to detect light over a substantial geometric area, multiple light detectors can be arranged into arrays connected in parallel. These arrays are sometimes referred to as silicon photomultipliers (SiPMs) or multi-pixel photon counters (MPPCs).

Some of the above arrangements are sensitive to relatively low intensities of light, thereby enhancing their detection qualities. However, this can lead to the above arrangements also being disproportionately susceptible to adverse background effects (e.g., extraneous light from outside sources could affect a measurement by the light detectors).

SUMMARY

In one example, a system includes a lens disposed relative to a scene and configured to focus light from the scene toward a focal plane of the lens. The system also includes an aperture defined within an opaque material disposed parallel to the focal plane of the lens. The system also includes a plurality of waveguides including a given waveguide. The given waveguide has an input end that receives a portion of light transmitted through the aperture. The given waveguide guides the received portion of the light for transmission through an output end of the given waveguide. A cross-sectional area of the guided light at the output end is greater than a cross-sectional area of the received portion of the light at the input end. The system also includes an array of light detectors that detects the guided light transmitted through the output end.

In another example, a method involves focusing, by a lens disposed relative to a scene, light from the scene toward a focal plane. The method also involves transmitting, through an aperture defined within an opaque material disposed parallel to the focal plane, the focused light from the scene. The method also involves receiving, at an input end of a given waveguide of a plurality of waveguides, a portion of the light transmitted through the aperture. The method also involves guiding, by the given waveguide, the received portion of the light toward an output end of the given waveguide. The method also involves detecting, at an array of light detectors, the guided light propagating out of the output end. A cross-sectional area of the detected light is greater than a cross-sectional area of the portion of the light received at the input end.

In yet another example, a light detection and ranging (LIDAR) device includes a LIDAR transmitter that illuminates a scene. The LIDAR device also includes a LIDAR receiver that receives light scattered by one or more objects within the scene. The LIDAR receiver includes a lens that focuses the received light toward a focal plane. The LIDAR receiver also includes an aperture defined within an opaque material disposed parallel to the focal plane. The LIDAR receiver also includes a plurality of waveguides. A given waveguide of the plurality has an input end that receives a portion of light transmitted through the aperture. The given waveguide guides the received portion of the light toward an output end of the given waveguide. The LIDAR receiver also includes an array of light detectors that intercepts and detects the guided light transmitted through the output end. A cross-sectional area of a detection region of the array that intercepts the guided light transmitted through the output end is greater than a cross-sectional area of the received portion of the light at the input end.

In still another example, a system comprises means for focusing light from a scene toward a focal plane. The system also comprises means for transmitting, through an aperture defined within an opaque material disposed at the focal plane, the focused light from the scene. The system also comprises means for receiving, at an input end of a given waveguide of a plurality of waveguides, a portion of the light transmitted through the aperture. The system also comprises means for guiding, by the given waveguide, the received portion of the light toward an output end of the given waveguide. The system also comprises means for detecting, at an array of light detectors, the guided light propagating out of the output end. A cross-sectional area of the detected light is greater than a cross-sectional area of the portion of the light received at the input end.

The foregoing summary is illustrative only and is not intended to be in any way limiting. In addition to the illustrative aspects, embodiments, and features described above, further aspects, embodiments, and features will become apparent by reference to the figures and the following detailed description.

BRIEF DESCRIPTION OF THE FIGURES

FIG. **1**A is an illustration of a noise limiting system that includes an aperture, according to example embodiments.

FIG. **1**B is another illustration of the system in FIG. **1**A, according to example embodiments.

FIG. **2** is a simplified block diagram of a LIDAR device, according to example embodiments.

FIG. **3**A is an illustration of a noise limiting system that includes an aperture and a waveguide array, according to example embodiments.

FIG. **3**B illustrates a cross-section view of the system in FIG. **3**A, according to example embodiments.

FIG. **4** is a flowchart of a method, according to example embodiments.

DETAILED DESCRIPTION

Any example embodiment or feature described herein is not necessarily to be construed as preferred or advantageous over other embodiments or features. The example embodiments described herein are not meant to be limiting. It will be readily understood that certain aspects of the disclosed implementations can be arranged and combined in a wide variety of different configurations. Furthermore, the particular arrangements shown in the figures should not be viewed as limiting. It should be understood that other implementations might include more or less of each element shown in a given figure. In addition, some of the illustrated elements may be combined or omitted. Similarly, an example implementation may include elements that are not illustrated in the figures.

I. Overview

Example implementations may relate to devices, systems, and methods for reducing background light imparted onto an array of light detectors. The light detectors in the array may be sensing light from a scene. For example, the light detectors may be a sensing component of a light detection and ranging (LIDAR) device.

One example system includes a lens. The lens may be used to focus light from a scene toward a focal plane. However, the lens may also focus background light not intended to be observed by the system (e.g., sunlight within the scene). In order to selectively filter the light (i.e., separate background light from light corresponding to information within the scene), an opaque material (e.g., selectively etched metal, a glass substrate partially covered by a mask) may be placed behind the lens. The opaque material could be shaped as a slab, a sheet, or various other shapes in a variety of embodiments. Within the opaque material, an aperture may be defined. The aperture may select a region of, or the entirety of, the light of the scene focused by the lens toward the opaque material.

On a backside of the opaque material (i.e., a side of the opaque material opposite the lens), the light selected by the aperture may be transmitted through the aperture. In the direction of the light transmitted through the aperture, the system may include a plurality of adjacent waveguides in a linear arrangement. Each waveguide can have an input end adjacent to the aperture, and an output end opposite to the input end (e.g., at a greater distance to the aperture). Further, for each waveguide, the system may also include an array of light detectors (e.g., SPADs) disposed along the output end of the waveguide. This array of light detectors may detect a portion of the light (e.g., a light intensity thereof) guided through the waveguide toward the output end. Because the light diverges inside the waveguide, the number of light detectors able to fit into a detection area (e.g., detectors that intercept light transmitted through the output end of the waveguide) can be larger than could fit in a detection area corresponding to a portion of the aperture from which a portion of the light is transmitted into the input end of the waveguide. This is due to the detection area being more focused, and thus smaller, at the aperture than at a distance displaced from the aperture.

Further, in some implementations, the plurality of waveguides can be configured to control divergence of guided light such that the divergence happens along one direction (e.g., perpendicular to a long axis of the aperture) more than another direction (e.g., parallel to the long axis of the aperture). By way of example, consider an aperture having a cross-sectional area of 2000 μm (long axis) by 200 μm (short axis). In this example, the plurality of waveguides can be implemented as 10 stacked waveguides, each having a length (along the long axis of the aperture) of 200 μm. In this example, the portion of the light entering the input end of a waveguide may have a cross-sectional area of 200 μm by 200 μm, which may be suitable to accommodate hundreds of SPADs (e.g., each SPAD having a cross-sectional area between 200 μm^2 and 600 μm^2). By comparison, after the guided light diverges inside the waveguide and exits through the output end, the cross-sectional area of the guided light at the output end may be larger depending on the dimensions of the waveguide for instance, and may thus accommodate thousands or more SPADs. Further, in some examples, the array of SPADs can be connected in parallel to one another, which may allow combining the signals from the connected SPADs to improve the sensitivity of the system (e.g., increase the combined detection area of the SPADs).

Additionally, with this arrangement, a first array of light detectors coupled to a first waveguide may receive light transmitted through a first portion of the aperture, and a second array of light detectors coupled to a second waveguide may receive light through a second portion of the aperture. As a result, the system can determine a one-dimensional (1D) image of the scene, while still allowing for a larger detection area relative to the size of the aperture. For example, each array of light detectors can be connected in parallel to provide a combined output that represents a single image pixel of the scene.

Without the waveguides, for example, the portions of the light transmitted through the aperture may diverge and overlap prior to arriving at the array of light detectors. Whereas, with the plurality of waveguides, each waveguide can limit divergence of a portion of the light guided therein such that the guided portion does not overlap another guided portion of the light inside an adjacent waveguide. As a result, each array of light detectors can receive guided light that corresponds to a respective portion of the aperture regardless of the proximity of the portions of the aperture or the distance between the aperture and the respective arrays of light detectors. Additionally or alternatively, the system can detect light transmitted through multiple proximally arranged apertures (or portions of a single aperture) simultaneously to generate a 1D or 2D image of the scene, regardless of the distance between the apertures or the distance between a light detector array and an aperture.

In some examples, the plurality of waveguides can be implemented as a plurality of glass plates stacked adjacent to the aperture. With this arrangement, light transmitted through a portion of the aperture adjacent to a glass plate could propagate through the glass plate. For example, the stacked glass plates can be separated by low index of refraction materials (e.g., a polymer coating, fluorine-doped glass, etc.) to reduce divergence of guided light therein in a direction of an adjacent waveguide (e.g., via total internal reflection, etc.), while allowing divergence of the guided light in another (e.g., perpendicular) direction.

In some implementations, the system may also include an absorber (e.g., carbon black) positioned between adjacent waveguides to prevent guided light inside one waveguide from leaking into another. For example, a light absorbing layer can have a suitable thickness for absorbing evanescent light evanescing through surfaces of adjacent waveguides, and/or for absorbing light propagating inside a cladding of a waveguide (e.g., cladding modes) rather than inside a core of the waveguide.

II. Example Systems and Devices

FIG. **1**A is an illustration of a noise limiting system **100** that includes an aperture, according to example embodiments. As shown, system **100** includes an array **110** of light detectors (exemplified by detectors **112** and **114**), an aperture **122** defined within an opaque material **120**, and a lens **130**. System **100** may measure light **102** scattered by an object **104** within a scene. Light **102** may also come, at least partially, from background sources. Thus, in some examples, system **100** may be included in a light detection and ranging (LIDAR) device. For example, the LIDAR device may be used for navigation of an autonomous vehicle. Further, in some embodiments, system **100**, or portions thereof, may be contained within an area that is unexposed to exterior light other than through lens **130** and/or aperture **122**. This may prevent ambient light from triggering the detectors in array **110** thereby affecting measurements.

Array **110** includes an arrangement of light detectors, exemplified by detectors **112** and **114**. In various embodi-

ments, array **110** may have different shapes. As shown, array **110** has a rectangular shape. However, in other embodiments, array **110** may be circular or may have a different shape. The size of array **110** may be selected according to an expected cross-sectional area of light **110** diverging from aperture **122**, and may thus be based on the distance between array **110** and aperture **122**, dimensions of aperture **122**, optical characteristics of lens **130**, etc. In some embodiments, array **110** may be movable. For example, array **110** may be actuated closer to, or further from, aperture **122**. To that end, for instance, array **110** could be mounted on an electrical stage capable of translating in one, two, or three dimensions.

Further, in some implementations, array **110** may provide one or more outputs to a computing device or logic circuitry. For example, a microprocessor-equipped computing device may receive electrical signals from array **110** which indicate an intensity of light **102** incident on array **110**. The computing device may then use the electrical signals to determine information about object **104** (e.g., distance of object **104** from aperture **122**, etc.). In some embodiments, some or all of the light detectors within array **110** may be interconnected with one another in parallel. To that end, for example, array **110** may be an SiPM or an MPPC, depending on the particular arrangement and type of the light detectors within array **110**.

Light detectors **112**, **114**, etc., may include various types of light detectors. In one example, detectors **112**, **114**, etc. include SPADs. SPADs may employ avalanche breakdown within a reverse biased p-n junction (i.e., diode) to increase an output current for a given incident illumination on the SPAD. Further, SPADs may be able to generate multiple electron-hole pairs for a single incident photon. In another example, light detectors **112**, **114**, etc., may include APDs. In some instances, APDs or SPADs may be biased above an avalanche breakdown voltage. Such a biasing condition may create a positive feedback loop having a loop gain that is greater than one. Further, APDs or SPADs biased above the threshold avalanche breakdown voltage may be single photon sensitive. In other examples, light detectors **112**, **114**, etc., may include photoresistors, charge-coupled devices (CCDs), and/or photovoltaic cells, among others.

In some implementations, array **110** may include more than one type of light detector across the array. For example, array **110** can be configured to detect multiple predefined wavelengths of light **102**. To that end, for instance, array **110** may comprise some SPADs that are sensitive to one range of wavelengths and other SPADs that are sensitive to a different range of wavelengths. In some embodiments, light detectors **110** may be sensitive to wavelengths between 400 nm and 1.6 μm (visible and infrared wavelengths). Further, light detectors **110** may have various sizes and shapes within a given embodiment or across various embodiments. In some embodiments, light detectors **112**, **114**, etc., may include SPADs that have package sizes that are 1%, 0.1%, or 0.01% of the area of array **110**.

Opaque material **120** may block a portion of light **102** from the scene (e.g., background light) that is focused by the lens **130** from being transmitted to array **110**. As such, opaque material **120** may be configured to block certain background light that could adversely affect the accuracy of a measurement performed by array **110**. Opaque material **120**, and therefore the aperture **122**, may be positioned at or near a focal plane of the lens **130**. In one example, opaque material **120** may block transmission by absorbing light **102**. In another example, opaque material **120** may block transmission by reflecting light **102**. A non-exhaustive list of example implementations of opaque material **120** includes an etched metal, a polymer substrate, a biaxially-oriented polyethylene terephthalate (BoPET) sheet (also referred to as a Mylar® sheet), or a glass overlaid with an opaque mask, among other possibilities.

Aperture **122** provides a port within opaque material **120** through which light **102** may be transmitted. Aperture **122** may be defined within opaque material **120** in a variety of ways. In one example, where opaque material **120** includes a metal, the metal may be etched to define aperture **122**. In another example, where opaque material **120** is a glass substrate overlaid with a mask, the mask may include a gap that defines aperture **122** (e.g., via photolithography). In various embodiments, aperture **122** may be partially or wholly transparent. For example, where opaque material **120** is a glass substrate overlaid with a mask, aperture **122** may be defined as a portion of the glass substrate not covered by the mask, such that aperture **122** is not completely hollow but rather made of glass. Thus, for instance, aperture **122** may be nearly, but not entirely, transparent to one or more wavelengths of light **102** scattered by the object **104** (because most glass substrates are not 100% transparent).

Aperture **122** (in conjunction with opaque material **120**) may be configured to spatially filter light **102** from the scene at the focal plane. For example, light **102** may be focused onto a focal plane along a surface opaque material **120**, and aperture **122** may allow only a portion of the focused light to be transmitted to array **110**. As such, aperture **122** may behave as an optical pinhole. In one embodiment, aperture **122** may have a cross-sectional area of between 0.02 mm^2 and 0.06 mm^2 (e.g., 0.04 mm^2). In other embodiments, aperture **122** may have a different cross-sectional area depending on various factors such as optical characteristics of lens **130**, distance to array **110**, noise rejection characteristics of the light detectors in array **110**, etc.

Although the term "aperture" as used above with respect to aperture **122** describes a recess or hole in an opaque material through which light may be transmitted, it is noted that the term "aperture" may include a broad array of optical features. In one example, as used throughout the description and claims, the term "aperture" may additionally encompass transparent or translucent structures defined within an opaque material through which light can be partially transmitted. In another example, the term "aperture" may describe a structure that otherwise selectively limits the passage of light (e.g., through reflection or refraction), such as a mirror surrounded by an opaque material. In one example embodiment, mirror arrays surrounded by an opaque material may be arranged to reflect light in a certain direction, thereby defining a reflective portion. This reflective portion may be referred to as an "aperture".

Although aperture **122** is shown to have a rectangular shape, it is noted that aperture **122** can have a different shape, such as a round shape, circular shape, elliptical shape, among others. In some examples, aperture **122** can alternatively have an irregular shape specifically designed to account for optical aberrations within system **100**. For example, a keyhole shaped aperture may assist in accounting for parallax occurring between an emitter (e.g., light source that emits light **102**) and a receiver (e.g., lens **130** and array **110**). The parallax may occur if the emitter and the receiver are not located at the same position, for example. Other irregular aperture shapes are also possible, such as specifically shaped apertures that correspond with particular objects expected to be within a particular scene or irregular apertures that select specific polarizations of light **102** (e.g., horizontal polarizations or vertical polarizations).

Lens **130** may focus light **102** from the scene onto the focal plane where aperture **122** is positioned. With this arrangement, the light intensity collected from the scene, at lens **130**, may be focused to have a reduced cross-sectional area over which light **102** is projected (i.e., increasing the spatial power density of light **102**). For example, lens **130** may include a converging lens, a biconvex lens, and/or a spherical lens, among other examples. Alternatively, lens **130** can be implemented as a consecutive set of lens positioned one after another (e.g., a biconvex lens that focuses light in a first direction and an additional biconvex lens that focuses light in a second direction). Other types of lenses and/or lens arrangements are also possible. In addition, system **100** may include other optical elements (e.g., mirrors, etc.) positioned near lens **130** to aid in focusing light **102** incident on lens **130** onto opaque material **120**.

Object **104** may be any object positioned within a scene surrounding system **100**. In implementations where system **100** is included in a LIDAR device, object **104** may be illuminated by a LIDAR transmitter that emits light **102** (or a portion thereof). In example embodiments where the LIDAR device is used for navigation on an autonomous vehicle, object **104** may comprise pedestrians, other vehicles, obstacles (e.g., trees), or road signs, among others.

As noted above, light **102** may be scattered by object **104**, focused by lens **130**, transmitted through aperture **122** in opaque material **120**, and measured by light detectors in array **110**. This sequence may occur (e.g., in a LIDAR device) to determine information about object **104**. In some embodiments, light **102** measured by array **110** may additionally or alternatively include light scattered off multiple objects, transmitted by a transmitter of another LIDAR device, ambient light, sunlight, among other possibilities.

In addition, the wavelength(s) of light **102** used to analyze object **104** may be selected based on the types of objects expected to be within a scene and their expected distance from lens **130**. For example, if an object is expected to be within the scene absorbs all incoming light of 500 nm wavelength, a wavelength other than 500 nm may be selected to illuminate object **104** and to be analyzed by system **100**. The wavelength of light **102** (e.g., if transmitted by a transmitter of a LIDAR device) may be associated with a source that generates light **102**. For example, if the light is generated by a diode laser, light **102** may comprise light within a wavelength range centered on 900 nm (or other wavelength of the diode laser). Thus, various types of light sources are possible for generating light **102** (e.g., an optical fiber amplifier, various types of lasers, a broadband source with a filter, etc.).

FIG. **1**B is another illustration of system **100**. As shown, system **100** may also include a filter **132**. Filter **132** may include any optical filter configured to selectively transmit light within a predefined wavelength range. For example, filter **132** can be configured to selectively transmit light within a visible wavelength range, an infrared wavelength range, or any other wavelength range of the light signal emitted by emitter **140**. For example, optical filter **132** may be configured to divert light of particular wavelengths away from the array **110**. For instance, optical filter **132** may divert a portion of light **102** that is not of the wavelength range emitted by emitter **140** away from array **110**. Therefore, optical filter **132** may, at least partially, reduce ambient light or background light from adversely affecting measurements by array **110**.

In various embodiments, optical filter **132** may be located in various positions relative to array **110**. As shown, optical filter **132** is located between lens **130** and opaque material **120**. However, optical filter **132** may alternatively be located between lens **130** and object **104**, between material **120** and array **110**, combined with array **110** (e.g., array **110** may have a surface screen that optical filter **132**, or each of the light detectors in array **110** may individually be covered by a separate optical filter, etc.), combined with aperture **122** (e.g., aperture **122** may be transparent only to a particular wavelength range, etc.), or combined with lens **130** (e.g., surface screen disposed on lens **130**, material of lens **130** transparent only to a particular wavelength range, etc.).

Further, as shown, system **100** could be used with an emitter **140** that emits a light signal to be measured by array **110**. Emitter **140** may include a fiber laser, a photodiode, a filament, a LIDAR transmitter, or any other light source. As shown, emitter **140** may emit light which is scattered by object **104** in the scene and ultimately measured (at least a portion thereof) by array **110**. In some embodiments, emitter **140** may be a laser emitter comprising an optical fiber amplifier or other amplifying system that increases power output of laser emitter **140**. Additionally or alternatively, in some embodiments, emitter **140** may be implemented as a pulsed laser (as opposed to a continuous wave laser), allowing for increased peak power while maintaining an equivalent continuous power output.

The following is a mathematical illustration comparing the amount of background light that is received by lens **130** to the amount of signal light that is detected by the array **110**. As shown, the distance between object **104** and lens **130** is 'd', the distance between lens **130** and opaque material **120** is 'f', and the distance between the opaque material **120** and the array **110** is 'x'. As noted above, material **120** and aperture **122** may be positioned at the focal plane of lens **130** (i.e., 'f' may be equivalent to the focal length). Further, as shown, emitter **140** is located at a distance 'd' from object **104**.

For the sake of example, it is assumed that object **104** is fully illuminated by sunlight at normal incidence, where the sunlight represents a background light source. Further, it is assumed that all the light that illuminates object **104** is scattered according to Lambert's cosine law. In addition, it is assumed that all of the light (both background and signal) that reaches array **110** is fully detected by array **110**.

The power of the signal, emitted by emitter **140**, that reaches aperture **122**, and thus array **110**, can be calculated using the following:

$$P_{signal} = P_{tx} \times \Gamma \times \frac{A_{lens}}{\pi d^2}$$

where P_{signal} represents the radiant flux (e.g., in W) of the optical signal emitted by emitter **140** that reaches array **110**, P_{tx} represents the power (e.g., in W) transmitted by emitter **140**, Γ represents the reflectivity of object **104** (e.g., taking into account Lambert's Cosine Law), and A_{lens} represents the cross-sectional area of lens **130**.

The background light that reaches lens **130** can be calculated as follows:

$$\bar{P}_{background} = \frac{\bar{P}_{sun} \times T_{filter}}{\pi}$$

where $\overline{P}_{background}$ represents the radiance (e.g., in

$$\frac{W}{m^2 \cdot sr})$$

of the background light (caused by sunlight scattering off object **104**) arriving on lens **130** that is within a wavelength band that will be selectively passed by filter **132**, $\overline{P}_{sun}$ represents the irradiance (e.g., in

$$\frac{W}{m^2})$$

density due to the sun (i.e., the background source), and T_{filter} represents the transmission coefficient of filter **132** (e.g., a bandpass optical filter). The factor of

$$\frac{1}{\pi}$$

relates to the assumption of Lambertian scattering off of object **104** from normal incidence.

Aperture **122** reduces the amount of background light permitted to be transmitted to the array **110**. To calculate the power of the background light that reaches array **110**, after being transmitted through aperture **122**, the area of aperture **122** is taken into account. The cross-sectional area ($A_{aperture}$) of aperture **122** can be calculated as follows:

$$A_{aperture}=w\times h$$

where $A_{aperture}$ represents the surface area of aperture **122** relative to object **104**, and w and h represent the width and height (or length) of aperture **122**, respectively. In addition, if lens **130** is a circular lens, the cross-sectional area (A_{lens}) of lens **130** can be calculated as follows:

$$A_{lens} = \pi\left(\frac{d_{lens}}{2}\right)^2$$

where d_{lens} represents the diameter of the lens.

Thus, the background power transmitted to array **110** through aperture **122** can be calculated as follows:

$$P_{background} = \overline{P}_{background} \times \frac{A_{aperture}}{f^2} \times A_{lens}$$

where $P_{background}$ represents background power incident on array **110**, and

$$\frac{A_{aperture}}{f^2}$$

represents the acceptance solid angle in steradians. The above formula indicates that $P_{background}$ is the amount of radiance in the background signal after being reduced by lens **130** and aperture **122**.

Substituting the above determined values in for $\overline{P}_{background}$, $A_{aperture}$, and A_{lens} the following can be derived:

$$P_{background} = \left(\frac{\overline{P}_{sun}T_{filter}}{\pi}\right)\times\left(\frac{wh}{f^2}\right)\times\left(\pi\left(\frac{d_{lens}}{2}\right)^2\right) = \overline{P}_{sun}T_{filter}wh\frac{d_{lens}^2}{4f^2}$$

Additionally, the quantity

$$F = \frac{f}{d_{lens}}$$

may be referred to as the "F number" of lens **130**. Thus, with one more substitution, the following can be deduced as the background power:

$$P_{background} = \frac{\overline{P}_{sun}T_{filter}wh}{4F^2}$$

Making similar substitutions, the following can be deduced for signal power transmitted from the emitter **140** that arrives at the array **110**:

$$P_{signal} = P_{tx} \times \Gamma \times \frac{\pi\left(\frac{d_{lens}}{2}\right)^2}{\pi d^2} = \frac{P_{tx}\Gamma d_{lens}^2}{4d^2}$$

Further, a signal to noise ratio (SNR) of system **100** may be determined by comparing P_{signal} with $P_{background}$. As demonstrated, the background power ($P_{background}$) may be significantly reduced with respect to the signal power due to the inclusion of aperture **122**, particularly for apertures having small w and/or small h (numerator of $P_{background}$ formula above). Besides reducing aperture area, increasing the transmitted power (P_{tx}) by emitter **140**, decreasing the transmission coefficient (T_{filter}) (i.e., reducing an amount of background light that gets transmitted through the filter), and increasing the reflectivity (Γ) of object **104** may be ways of increasing the SNR. Further, it is noted that in implementations where emitter **140** emits a pulsed signal, the shot noise of the background, as opposed to the power of the background, may be primarily relevant when computing the SNR. Thus, in some implementations, the SNR can be alternatively computed by comparing the shot noise against the signal power.

As shown in FIG. **1**A, light **102** diverges as it propagates away from aperture **122**. Due to the divergence, a detection area at array **110** (e.g., shown as shaded area illuminated by light **102**) may be larger than a cross-sectional area of aperture **122** at the focal plane. An increased detection area (e.g., measured in m^2) for a given light power (e.g., measured in W) may lead to a reduced light intensity (e.g., measured in

$$\frac{W}{m^2})$$

incident on array **110**.

The reduction in light intensity may be particularly beneficial in embodiments where array **110** includes SPADs or other light detectors having high sensitivities. For example, SPADs derive their sensitivity from a large reverse-bias voltage that produces avalanche breakdown within a semi-

conductor. This avalanche breakdown can be triggered by the absorption of a single photon, for example. Once a SPAD absorbs a single photon and the avalanche breakdown begins, the SPAD cannot detect additional photons until the SPAD is quenched (e.g., by restoring the reverse-bias voltage). The time until the SPAD is quenched may be referred to as the recovery time. If additional photons are arriving at time intervals approaching the recovery time (e.g., within a factor of ten), the SPAD may begin to saturate, and the measurements by the SPAD may thus become less reliable. By reducing the light power incident on any individual light detector (e.g., SPAD) within array **110**, the light detectors (e.g., SPADs) in array **110** may remain unsaturated. As a result, the light measurements by each individual SPAD may have an increased accuracy.

FIG. **2** is a simplified block diagram of a LIDAR device **200**, according to example embodiments. In some example embodiments, LIDAR device **200** can be mounted to a vehicle and employed to map a surrounding environment (e.g., the scene including object **204**, etc.) of the vehicle. As shown, LIDAR device **200** includes a laser emitter **240** that may be similar to emitter **140**. Further, as shown, LIDAR device **200** includes a controller **250**. Further, as shown, LIDAR device **200** includes a noise limiting system **290** that may be similar to system **100**. For example, as shown, system **290** includes an array **210** of light detectors, an opaque material **220** with an aperture defined therein (not shown), and a lens **230**, which are similar, respectively, to array **110**, opaque material **120**, and lens **130**. It is noted that LIDAR device **200** may alternatively include more or fewer components than those shown. For example, LIDAR device **200** may include an optical filter (e.g., filter **132**). Thus, system **290** can be implemented similarly to system **100** and/or any other noise limiting system described herein. Device **200** may operate emitter **240** to emit light **202** toward a scene that includes object **204**. Device **200** may then detect scattered light **202** to map or otherwise determine information about object **204**.

Controller **250** may be configured to control components of LIDAR device **200** and to analyze signals received from components of LIDAR device **200** (e.g., array **210** of light detectors). To that end, controller **250** may include one or more processors (e.g., a microprocessor, etc.) that execute instructions stored in a memory (not shown) of device **200** to operate device **200**. Additionally or alternatively, controller **250** may include digital or analog circuitry wired to perform one or more of the various functions described herein.

In some implementations, controller **250** may use timing information associated with a signal measured by array **210** to determine a location (e.g., distance from LIDAR device **200**) of object **204**. For example, in embodiments where laser emitter **240** is a pulsed laser, controller **250** can monitor timings of output light pulses and compare those timings with timings of signal pulses measured by array **210**. For instance, controller **250** can estimate a distance between device **200** and object **204** based on the speed of light and the time of travel of the light pulse (which can be calculated by comparing the timings). In some implementations, controller **250** may be configured to account for parallax (e.g., due to laser emitter **240** and lens **230** not being located at the same location in space). By accounting for the parallax, controller **250** can improve accuracy of the comparison between the timing of the output light pulses and the timing of the signal pulses measured by the array **210**.

In some implementations, controller **250** could modulate light **202** emitted by emitter **240**. For example, controller **250** could change the projection (e.g., pointing) direction of emitter **240** (e.g., by actuating a mechanical stage that mounts emitter **240**). As another example, controller **250** could modulate the timing, the power, or the wavelength of light **202** emitted by emitter **240**. In some implementations, controller **250** may also control other operational aspects of device **200**, such as adding or removing filters (e.g., filter **132**) along a path of propagation of light **202**, adjusting relative positions of various components of device **200** (e.g., array **210**, opaque material **220** (and an aperture therein), lens **230**, etc.), among other possibilities.

In some implementations, controller **250** could also adjust an aperture (not shown) within material **220**. For example, the aperture may, in some embodiments, be selectable from a number of apertures defined within the opaque material. In such embodiments, a MEMS mirror located between the lens and the opaque material may be adjustable by the computing device to determine to which of the multiple apertures the light is directed. In some embodiments, the various apertures may have different shapes and sizes. In still other embodiments, the aperture may be defined by an iris (or other type of diaphragm). The iris may be expanded or contracted by controller **250**, for example, to control the size or shape of the aperture.

Through this process, LIDAR device **200** can adjust system **290** to obtain additional or different information about object **204** and/or the scene. In a first example, controller **250** may determine that background noise received by system **290** is currently relatively low (e.g., during night-time). In this example, controller **250** may increase the size of the aperture to improve the likelihood of capturing a particular scattered light pulse of light **202** that would otherwise be projected onto a region of opaque material **220** outside the aperture. In a second example, controller **250** may adjust the position of the aperture to intercept scattered light **202** reflected off a different object than object **204** or from a different region in the scene.

In some scenarios, it may be desirable to obtain the additional information described above (e.g., different aperture position, etc.) simultaneously with the information obtained using the current aperture configuration, without significantly affecting the SNR. For instance, a light pulse emitted by emitter **240** may be scattered off several objects at different distances to LIDAR device **200**, and a portion of the scattered light may thus be focused, via lens **230**, onto a region of opaque material **220** outside the current aperture. Therefore, referring back to FIG. **1**A by way of example, it may be desirable to detect light focused onto a region adjacent to aperture **122** while simultaneously detecting light focused onto aperture **122**. However, if an additional aperture is positioned adjacent to aperture **122** (or the size of aperture **122** is increased), diverging light from the additional aperture may overlap with diverging light **102** prior to arrival at array **110**, thereby reducing the SNR of the detected signal.

Accordingly, example implementations are described herein for detecting light focused onto a relatively larger area along the focal plane of lens **230**, while also reducing background noise and increasing the detection area where light detectors can be deployed.

FIG. **3**A is an illustration of a noise limiting system **300** that includes an aperture and a waveguide array, according to example embodiments. In some implementations, system **300** can be used with LIDAR device **200** instead of or in addition to system **290**. As shown, system **300** may measure light **302** scattered by an object **304** within a scene, similarly to, respectively, system **100**, light **102**, and object **104**.

As shown, system **300** includes light detector arrays **310**, **316**, and **318**, each of which may be similar to light detector array **110**. For example, light detector array **310** may include a plurality of light detectors, similar to detectors **112** and **114**, arranged to intercept and/or detect diverging light portion **302***a* incident on array **310**. Further, outputs from the light detectors in array **310** can be combined (e.g., parallel circuit connection, computation via controller **250**, etc.) similarly to outputs of the light detectors in array **110**. By combining the outputs, for instance, system **300** can increase the detection area (shown as shaded region of array **310**) for detecting light **302***a*, as compared to a corresponding cross-sectional area of light portion **302***a* at aperture **322**. As shown, system **300** also includes an opaque material **320**, an aperture **322**, and a lens **330**, which may be similar, respectively, to opaque material **120**, aperture **122**, and lens **130**. For the sake of example, aperture **322** is shown to have a different shape (elliptical) compared to a shape of aperture **122** (rectangular). As shown, system **300** also includes a waveguide array **360** interposed between aperture **322** and arrays **310**, **316**, **318**.

Waveguide array **360** may include a plurality of waveguides (not shown) arranged to receive light **302** transmitted through aperture **322** and projected onto a receiving side **360***a* of array **360** (shown as shaded region of side **360***a*).

FIG. **3**B illustrates a cross-section view of system **300**, according to example embodiments. As shown, waveguide array **360** includes cladding layers **362**, **366**, **372**, **376**, **382**, and **386**, core layers **364**, **374**, and **384**, and absorbing layers **368** and **378**. Cladding layers **362**, **366**, **372**, **376**, **382**, and **386** may comprise a relatively low index of refraction material, such as polymer coated or fluorine-doped glass substrates for instance. Core layers **364**, **374**, and **384** may comprise a relatively high index of refraction material, such as a glass or high-index polymer substrate for instance, that is transparent to at least some wavelengths of light **302**. Absorbing layers **368** and **378** may comprise an absorber formed from any material suitable for absorbing wavelengths of light **302** guided within waveguide array **360**. To that end, a non-exhaustive list of example absorbers includes carbon black, black chrome, among others.

In some examples, waveguide array **360** can be formed from a glass substrate that includes doped regions corresponding to cladding layers **362**, **366**, **372**, **376**, and **386**. Thus, regions of the glass substrate that are not doped may correspond to core layers **364**, **374**, and **378**. With this arrangement, a first waveguide of the plurality of waveguides in array **360** may comprise cladding **362**, core **364**, and cladding **366**. Similarly, a second waveguide may comprise cladding **372**, core **374**, and cladding **376**. Similarly, a third waveguide may comprise cladding **382**, core **384**, and cladding **386**.

Further, as shown, each waveguide in array **360** may have a respective input end (e.g., exposed surface of respective core) along a surface of side **360***a*, and a respective output end (e.g., another exposed surface of respective core) along a surface of output side **360***b* (opposite to side **360***a*). Further, the waveguides in array **360** can have predefined dimensions based on the size of aperture **322**, the distance between aperture **322** and lens **330**, and characteristics of lens **330** (e.g., focal length), among other factors. The waveguides in array **360** may also be stacked or otherwise aligned with aperture **322** such that each waveguide receives a respective portion of light **302** projected onto side **360***a*. As shown, for instance, the waveguides in array **360** may be in a stack arrangement parallel to a lengthwise direction (e.g., long axis) of aperture **322** (e.g., vertically stacked between sides **360***c* and **360***d*).

As a result, the first waveguide may receive a portion of light **302** projected on side **360***a* and extending between cladding layers **362** and **366** (i.e., input end of the first waveguide). The first waveguide may then guide the first portion of light **302**, via total internal reflection for instance, toward and out of an output end of the first waveguide (e.g., surface of core **364** at side **360***b*) as first diverging light portion **302***a*. Further, as shown, light detector array **310** may be positioned adjacent to the output end of the first waveguide to intercept and detect diverging light portion **302***a*. Similarly, the second waveguide can guide second diverging light portion **302***b* toward light detector array **316**, and the third waveguide can guide third diverging light portion **302***c* toward light detector array **318**.

As shown, each waveguide may extend vertically (e.g., parallel to a long axis of aperture **322**) between sides **360***c* and **360***d*, and horizontally (e.g., parallel to a short axis of aperture **322** which points out of the page in FIG. **3**B) between side **360***e* and another side of array **360** opposite to side **360***e*. Further, as shown, each waveguide may reduce divergence (e.g., due to reflection of guided light at the cladding layers, etc.) in a stacking direction (e.g., vertically) of the waveguides, while allowing a greater extent of divergence in a direction perpendicular to the stacking direction (e.g., horizontally). As a result, for instance, array **360** may prevent overlap between respective diverging light portions **302***a*, **302***b*, **302***c* guided in the adjacent waveguides while increasing the respective detection areas at the light detector arrays relative to a cross-sectional area of aperture **322**.

Further, with this arrangement, system **300** can capture a multi-pixel image of the scene by detecting light portions incident on each light detector array **310**, **316**, **318** separately and simultaneously. As shown, for instance, each output from a light detector array (**310**, **316**, or **318**) may correspond to an image pixel of a vertical arrangement of pixels representating the scene. Further, the image pixel is detected over a larger cross-sectional area than a cross-sectional area of a portion of light **302** entering a respective input end. As such, for example, waveguide array **360** can be employed as an optical diffuser that distributes the power density of light **302** transmitted through aperture **322** among the various light detector arrays.

In some scenarios, the guided light portions may leak to an adjacent waveguide. In the first waveguide by way of example, such leakage may be due to an angle of incidence of the guided light at an interface between cladding **366** and core **364** approaching the critical angle. As a result, guided light in the first waveguide may potentially leak through cladding **366** as an evanescent field evanescing toward the second waveguide. To mitigate this leakage, as shown, absorbing layer **368** includes an absorber (e.g., carbon black) that has a suitable thickness to absorb the evanescent field evanescing from the first waveguide and/or the second waveguide. Similarly, absorbing layer **378** may be configured to absorb evanescing light between the second and third waveguides.

In some implementations, a core of a waveguide in array **360** can be surrounded by cladding layers along all sides of the core other than the exposed input end and output end of the waveguide. For example, cladding **362** may extend around core **364** at side **360***e* (and an opposite side of array **360**) to connect with cladding layer **366**. In these implementations, the first waveguide may be configured as a

non-planar waveguide that provides two-dimensional transverse optical confinement of light portion **302***a* guided inside the first waveguide. Alternatively, in other implementations, the core can be sandwiched between planar cladding layers along only two sides of the core. For example, cladding layers **372** and **376** may be disposed along two opposite sides of core **374** but not along side **360***e* (and an opposite side thereof) of array **360**. Thus, in these implementations, the second waveguide may be configured as a planar waveguide that provides optical confinement in only one transverse direction of light portion **302***b* guided inside the second waveguide.

It is noted that the sizes, positions, and shapes of the various components and features shown in FIGS. **3**A and **3**B are not necessarily to scale, but are illustrated as shown for convenience in description. Further, in some embodiments, system **300** may include fewer or more components than those shown. Further, in some embodiments, one or more of the components shown can be combined, or divided into separate components.

In a first embodiment, although light detector arrays **310**, **316**, **318** are shown to be disposed at a distance from side **360***b* of waveguide array **360**, one or more of light detector arrays **310**, **316**, **318** can be alternatively disposed on side **360***b*. For example, array **310** can be disposed (e.g., molded, etc.) on the output end (exposed surface of core **364**) of the first waveguide, light detector array **316** can be disposed on the output end (exposed surface of core **374**) of the second waveguide, and/or light detector **318** can be disposed on the output end (exposed surface of core **384**) of the third waveguide.

In a second embodiment, a distance between waveguide array **360** and aperture **322** can vary. In one example, as shown, waveguide array **360** can be disposed along (e.g., in contact with, etc.) opaque material **320**. Thus, for instance, input ends of the waveguides in array **360** can be substantially coplanar with aperture **322**. With this arrangement, aperture **322** can be configured as a limiting aperture in one direction (e.g., parallel to long axis or lengthwise direction of aperture **322**), and the input ends of the waveguides in array **360** can be configured as limiting apertures in another direction (e.g., parallel to short axis or widthwise direction of aperture **322**). Further, with this arrangement for instance, waveguide array **360** can guide light portions **302***a*, **302***b*, **302***c* prior to divergence and/or mixing of the light portions after being transmitted through aperture **302**. However, in other examples, waveguide array **360** can be alternatively positioned at a distance (e.g., gap) from opaque material **320** (and aperture **322**). For instance, the outputs of light detector arrays **310**, **316**, **318** can be processed (e.g., via controller **250**) to account for divergence/mixing of light **302** transmitted through aperture **322**.

In a third embodiment, the arrangement of aperture **322** (and/or side **360***a* of array **360**) relative to lens **330** can vary.

In one example, aperture **322** (and/or input ends of the waveguides in array **360**) can be disposed along the focal plane of lens **330**.

In another example, aperture **322** (and/or input ends of the waveguides in array **360**) can be disposed parallel to the focal plane of lens **330** but at a different distance to lens **330** than the distance between the focal plane and lens **330**. Thus, in this example, optical characteristics (e.g., focus configuration, etc.) of system **300** can be adjusted depending on an application of system **300**. As such, in some instances, focused light **302** may continue converging (after transmission through aperture **322**) inside waveguide **360** before beginning to diverge toward light detector arrays **310**, **316**, **318**. In some instances, system **300** may also include an actuator that moves lens **330**, opaque material **320**, and/or array **360** to achieve a particular optical configuration while scanning the scene.

In yet another example, aperture **322** (and/or side **60***a* of array **360**) can be arranged at an offset orientation relative to the focal plane of lens **330**. For instance, system **300** can rotate (e.g., via an actuator) opaque material **320** (and/or array **360**) to adjust the entry angle of light **302** into respective waveguides of array **360**. By doing so, a controller (e.g., controller **250**) can further control optical characteristics of system **300** depending on various factors such as lens characteristics of lens **330**, environment of system **300** (e.g., to reduce noise/interference arriving from a particular region of the scanned scene, etc.), among other factors.

In a fourth embodiment, opaque material **320** can be omitted from system **300**. With this arrangement for instance, each respective input end of the waveguides in array **360** may correspond to a respective aperture of system **300**.

In a fifth embodiment, although waveguide array **360** is shown to include a plurality of waveguides vertically arranged parallel to a long axis of aperture **322**, array **360** can alternatively include waveguides arranged parallel to a short axis of aperture **322** (e.g., stacked horizontally). Alternatively or additionally, waveguide array **360** may include a grid of waveguides arranged both horizontally and vertically such that system **300** can obtain a two-dimensional (2D) image of the scene.

In a sixth embodiment, although waveguide array **360** is shown as a single physical structure, the waveguides in array **360** can be alternatively implemented as separate physical structures, and the separate physical waveguides can be stacked (e.g., vertically) with absorbers **368** and **378** appropriately interposed between the various waveguides. For example, the waveguides can be implemented as glass plates that are stacked on top of one another in a stacking direction parallel to the lengthwise direction of aperture **322**.

In a seventh embodiment, one or more of cladding layers **362**, **366**, **372**, **376**, **382**, **386**, and/or absorbers **368**, **378** can be omitted.

In an eighth embodiment, the thickness of any of cladding layers **362**, **366**, **372**, **376**, **382**, and/or absorbers **368**, **378** can be varied between sides **360***a* and **360***b*. For example, the cladding layers (and/or the absorbers) can have a smaller thickness near side **360***a* relative to a corresponding thickness near side **360***b* (e.g., gradually increased, tapered, etc.). With such arrangement for instance, a larger extent of light **302** incident on side **360***a* can be projected onto the exposed surfaces of cores **364**, **374**, **384**, and thereby guided through the waveguides in array **360** toward light detector arrays **310**, **316**, **318**.

In a ninth embodiment, waveguide array **360** may include fewer or more than the three waveguides shown.

In a tenth embodiment, although the input ends of the waveguides in array **360** are shown to have a similar size, the input ends of the waveguides can alternatively have different sizes. By way of example, an input end of the first waveguide extending between cladding layers **362** and **366** can have a different size than an input end of the second waveguide extending between cladding layers **372** and **376**. In this example, light portion **302***a* detected at light detector array **310** may correspond to a greater or lower range of angles scanned within a field-of-view (FOV) of system **300**, compared to a range of angles scanned within the FOV and detected as light portion **302***b* at light detector array **316**.

In an eleventh embodiment, although light detector arrays **310**, **316**, **318** are shown as separate physical structures, light detector arrays **310**, **316**, **318** can be alternatively implemented on a single physical substrate, where one or more rows of light detectors are connected to one another but not to other rows of light detectors in the single substrate.

In a twelfth embodiment, a device that controls system **300** (e.g., LIDAR device **200**, etc.), can be configured to combine outputs from two or more light detector arrays to increase the detection area as well as the effective aperture size associated with the combined detected light portions. For example, outputs from arrays **310** and **316** can be combined such that a larger effective aperture size corresponding to two portions of light **302** incident on two input ends of the first and second waveguides can be achieved, as opposed to a smaller effective aperture size that corresponds to a single light portion incident on only one of the two input ends.

III. Example Methods and Computer Readable Media

FIG. **4** is a flowchart of a method **400**, according to example embodiments. Method **400** presents an embodiment of a method that could be used with any of systems **100**, **300**, and/or device **200**, for example. Method **400** may include one or more operations, functions, or actions as illustrated by one or more of blocks **402-410**. Although the blocks are illustrated in a sequential order, these blocks may in some instances be performed in parallel, and/or in a different order than those described herein. Also, the various blocks may be combined into fewer blocks, divided into additional blocks, and/or removed based upon the desired implementation.

In addition, for method **400** and other processes and methods disclosed herein, the flowchart shows functionality and operation of one possible implementation of present embodiments. In this regard, each block may represent a module, a segment, a portion of a manufacturing or operation process, or a portion of program code, which includes one or more instructions executable by a processor for implementing specific logical functions or steps in the process. The program code may be stored on any type of computer readable medium, for example, such as a storage device including a disk or hard drive. The computer readable medium may include a non-transitory computer readable medium, for example, such as computer-readable media that stores data for short periods of time like register memory, processor cache and Random Access Memory (RAM). The computer readable medium may also include non-transitory media, such as secondary or persistent long term storage, like read only memory (ROM), optical or magnetic disks, compact-disc read only memory (CD-ROM), for example. The computer readable media may also be any other volatile or non-volatile storage systems. The computer readable medium may be considered a computer readable storage medium, for example, or a tangible storage device.

Additionally or alternatively, for method **400** and other processes and methods disclosed herein, each block in FIG. **4** may represent circuitry that is wired to perform the specific logical functions in the process.

At block **402**, method **400** involves focusing, by a lens (e.g., lens **130**) disposed relative to a scene, light from the scene toward a focal plane of the lens. In some examples, the light from the scene may be scattered by an object (e.g., object **104**) within the scene. In some examples, a computing device (e.g., controller **250**) may actuate or otherwise adjust a characteristic of the lens (e.g., focal plane, focal length, etc.).

At block **404**, method **400** involves transmitting, through an aperture (e.g., aperture **122**) defined within an opaque material (e.g., opaque material **120**), the focused light from the scene.

At block **406**, method **400** involves receiving, at an input end of a given waveguide of a plurality of waveguides, a portion of the light transmitted through the aperture.

At block **408**, method **400** involves guiding, by the given waveguide, the received portion of the light toward an output end of the given waveguide.

At block **410**, method **400** involves detecting, via an array of light detectors, the guided light propagating out of the output end. A cross-sectional area of the detected light may be greater than a cross-sectional area of the portion of the light received at the input end.

The above detailed description describes various features and functions of the disclosed systems, devices, and methods with reference to the accompanying figures. While various aspects and embodiments have been disclosed herein, other aspects and embodiments will be apparent. The various aspects and embodiments disclosed herein are for purposes of illustration only and are not intended to be limiting, with the true scope being indicated by the following claims.

What is claimed:

1. A system comprising:

a lens disposed relative to a scene and configured to focus light from the scene toward a focal plane of the lens;

an aperture defined within an opaque material disposed parallel to the focal plane of the lens;

a plurality of waveguides, wherein a given waveguide of the plurality has an input end that receives a portion of light transmitted through the aperture, wherein the given waveguide guides the received portion of the light for transmission through an output end of the given waveguide, and wherein a cross-sectional area of the guided light at the output end is greater than a cross-sectional area of the received portion of the light at the input end; and

an array of light detectors that detects the guided light transmitted through the output end.

2. The system of claim **1**, wherein the given waveguide reduces divergence of the guided light along a lengthwise direction of the aperture.

3. The system of claim **1**, wherein the plurality of waveguides is in a stack arrangement, and wherein the given waveguide reduces divergence of the guided light along a stacking direction of the stack arrangement.

4. The system of claim **3**, wherein the plurality of waveguides comprises a planar waveguide array, and wherein the stacking direction is parallel to a lengthwise direction of the aperture.

5. The system of claim **1**, wherein the array of light detectors comprises a plurality of single photon avalanche diodes (SPADs).

6. The system of claim **1**, wherein the light detectors in the array are connected in parallel with one another.

7. The system of claim **1**, wherein the array of light detectors is disposed on the output end.

8. The system of claim **1**, wherein the output end is opposite to the input end.

9. The system of claim **1**, wherein the plurality of waveguides comprises:

a first core having a first index of refraction;

a second core having the first index of refraction; and

a cladding at least partially disposed between the first core and the second core, wherein the cladding has a second index of refraction that is less than the first index of refraction.

10. The system of claim **9**, wherein an input end of a first waveguide of the plurality of waveguides corresponds to a surface of the first core adjacent to the aperture, and wherein an input end of a second waveguide of the plurality of waveguides corresponds to a surface of the second core adjacent to the aperture.

11. The system of claim **10**, wherein the cladding is disposed along a plurality of sides of the first core other than: (i) a first side that includes the input end of the first waveguide and (ii) a second side that includes the output end of the first waveguide.

12. The system of claim **9**, further comprising an absorber disposed between the first core and the second core, wherein the absorber prevents, from propagating into the second core, evanescent light evanescing from the first core through the cladding.

13. The system of claim **9**, wherein the plurality of waveguides comprises a glass substrate, wherein the cladding corresponds a region of the glass substrate that is doped to have a lower index of refraction relative to adjacent regions of the glass substrate, wherein the first core corresponds to a region of the glass substrate that is not doped.

14. A method comprising:

focusing, by a lens disposed relative to a scene, light from the scene toward a focal plane;

transmitting, through an aperture defined within an opaque material parallel to the focal plane, the focused light from the scene;

receiving, at an input end of a given waveguide of a plurality of waveguides, a portion of the light transmitted through the aperture;

guiding, by the given waveguide, the received portion of the light toward an output end of the given waveguide; and

detecting, at an array of light detectors, the guided light propagating out of the output end, wherein a cross-sectional area of the detected light is greater than a cross-sectional area of the portion of the light received at the input end.

15. The method of claim **14**, further comprising combining outputs from the light detectors in the array based on the light detectors in the array being connected in parallel to one another.

16. The method of claim **15**, further comprising:

transmitting, via a light emitter, a light pulse toward the scene;

detecting a reflection of the light pulse based on the combined outputs from the light detectors; and

determining a location of an object in the scene based on at least the detected reflection.

17. A light detection and ranging (LIDAR) device comprising:

a LIDAR transmitter that illuminates a scene;

a LIDAR receiver that receives light scattered by one or more objects within the scene, wherein the LIDAR receiver comprises:

a lens that focuses the received light toward a focal plane;

an aperture defined within an opaque material disposed parallel to the focal plane;

a plurality of waveguides, wherein a given waveguide of the plurality has an input end that receives a portion of light transmitted through the aperture, and wherein the given waveguide guides the received portion of the light toward an output end of the given waveguide; and

an array of light detectors that intercepts and detects the guided light transmitted through the output end, wherein a cross-sectional area of a detection region of the array that intercepts the guided light transmitted through the output end is greater than a cross-sectional area of the received portion of the light at the input end.

18. The LIDAR device of claim **17**, wherein the array of light detectors comprises a plurality of single photon avalanche diodes (SPADs).

19. The LIDAR device of claim **17**, wherein the light detectors in the array are connected in parallel with one another.

20. The LIDAR device of claim **17**, wherein the array of light detectors is disposed along the output end.

* * * * *