US 20170289524A1

(19) United States

(12) Patent Application Publication

(10) Pub. No.: US 2017/0289524 A1

(43) Pub. Date: Oct. 5, 2017

Pacala et al.

(54) **OPTICAL SYSTEM FOR COLLECTING DISTANCE INFORMATION WITHIN A FIELD**

(71) Applicant: **Ouster, Inc.**, San Francisco, CA (US)

(72) Inventors: **Angus Pacala**, San Francisco, CA (US); **Mark Frichtl**, San Francisco, CA (US)

(21) Appl. No.: **15/276,532**

(22) Filed: **Sep. 26, 2016**

Related U.S. Application Data

(60) Provisional application No. 62/232,222, filed on Sep. 24, 2015.

Publication Classification

(51) **Int. Cl.**

H04N 13/02	(2006.01)
H04N 13/04	(2006.01)
G02B 3/00	(2006.01)
G02B 5/20	(2006.01)
G02B 27/22	(2006.01)
G02B 5/00	(2006.01)

(52) **U.S. Cl.**

CPC ***H04N 13/0217*** (2013.01); ***G02B 27/2214*** (2013.01); ***G02B 5/005*** (2013.01); ***G02B 3/0056*** (2013.01); ***G02B 5/208*** (2013.01); ***H04N 13/0495*** (2013.01)

(57) **ABSTRACT**

An optical system for collecting distance information within a field is provided. The optical system may include lenses for collecting photons from a field and may include lenses for distributing photons to a field. The optical system may include lenses that collimate photons passed by an aperture, optical filters that reject normally incident light outside of the operating wavelength, and pixels that detect incident photons. The optical system may further include illumination sources that output photons at an operating wavelength.

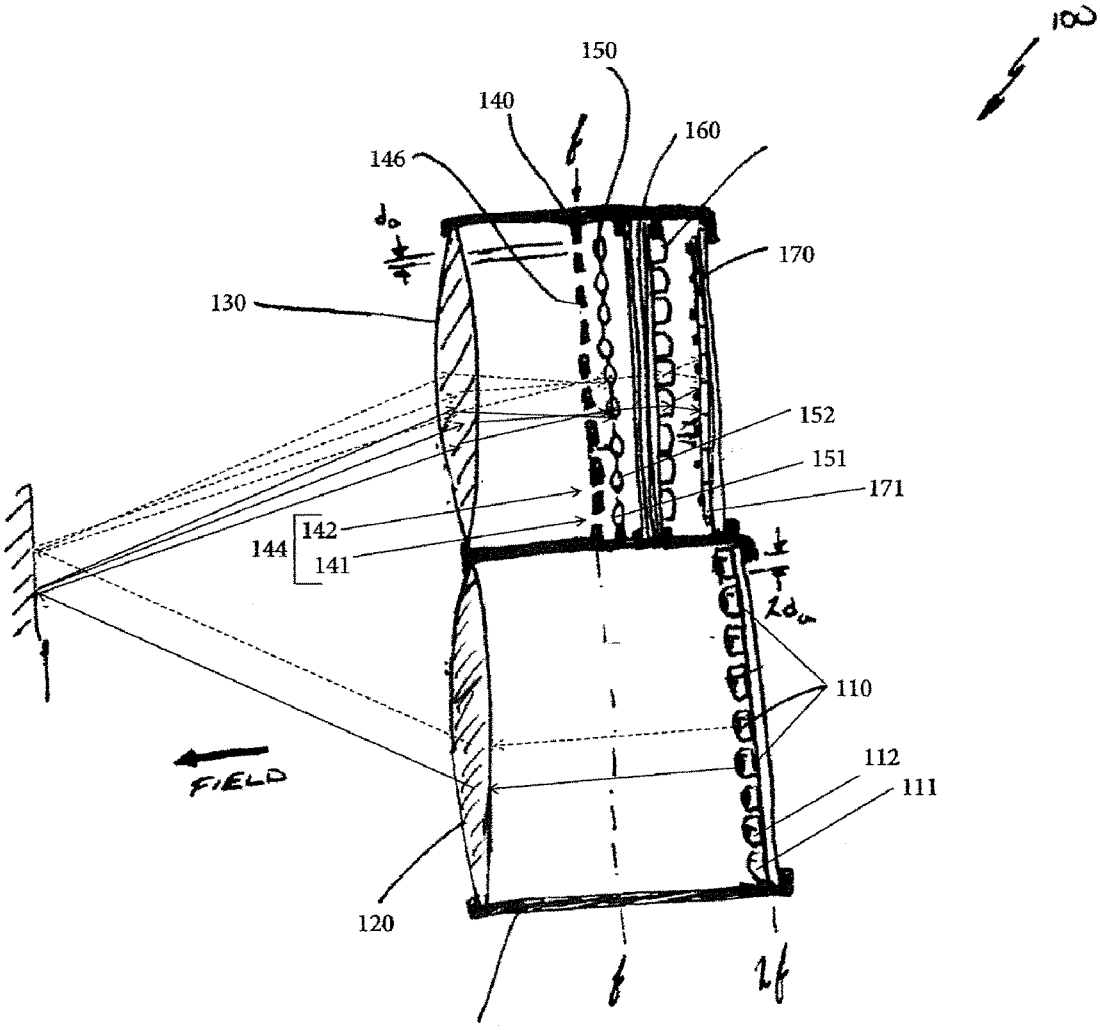

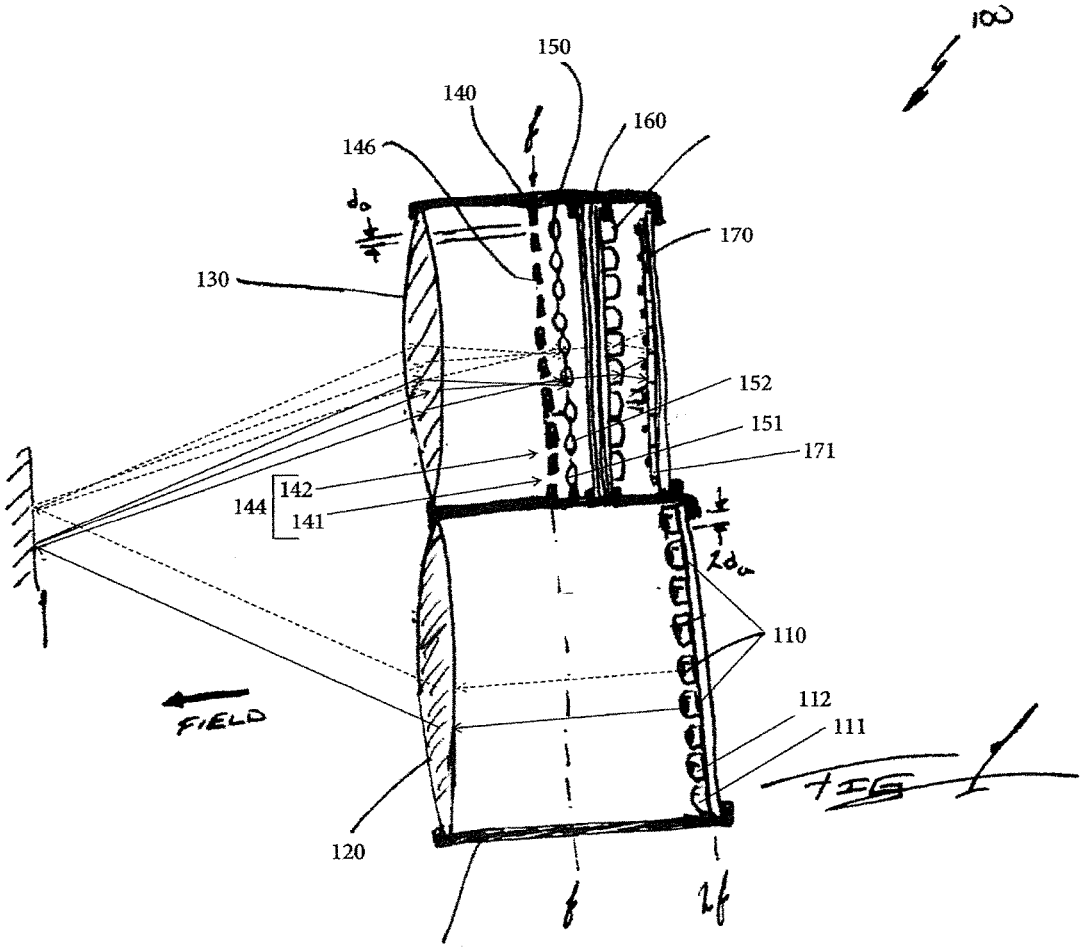
100
150
140
160
146
170
130
152
151
171
142
144
141
110
112
111
FIELD
120

FIG 1

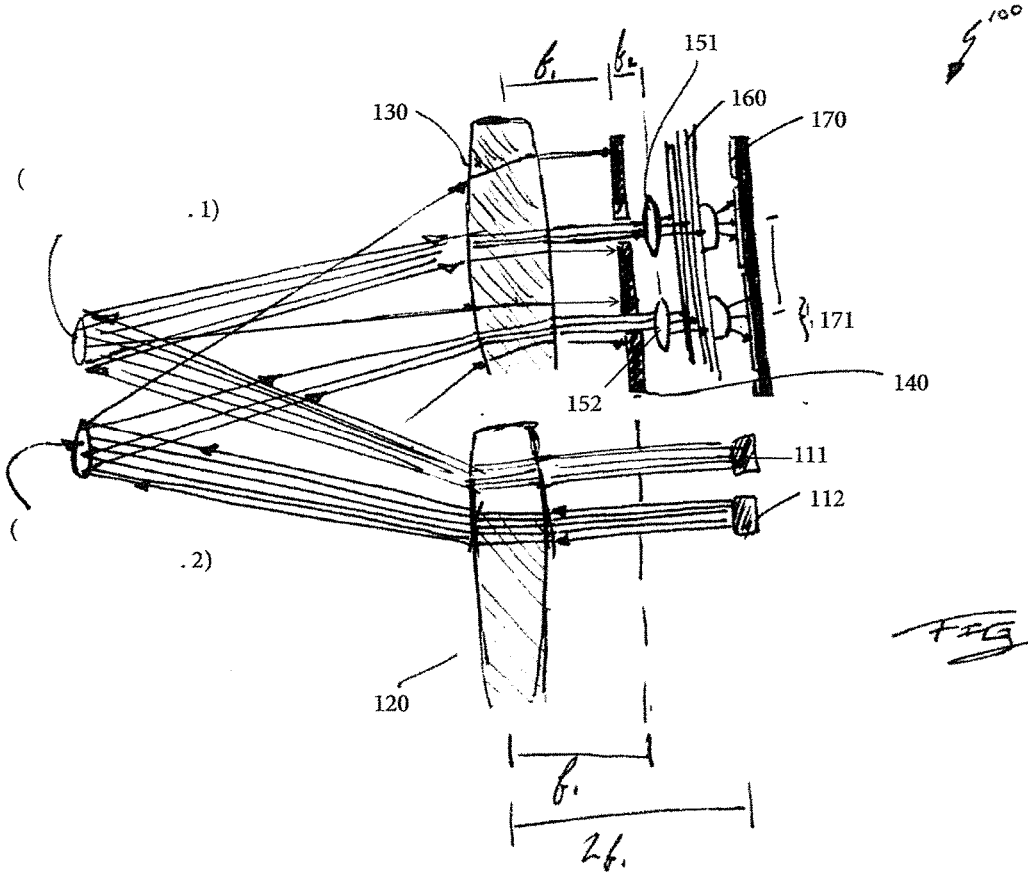

FIG. 2

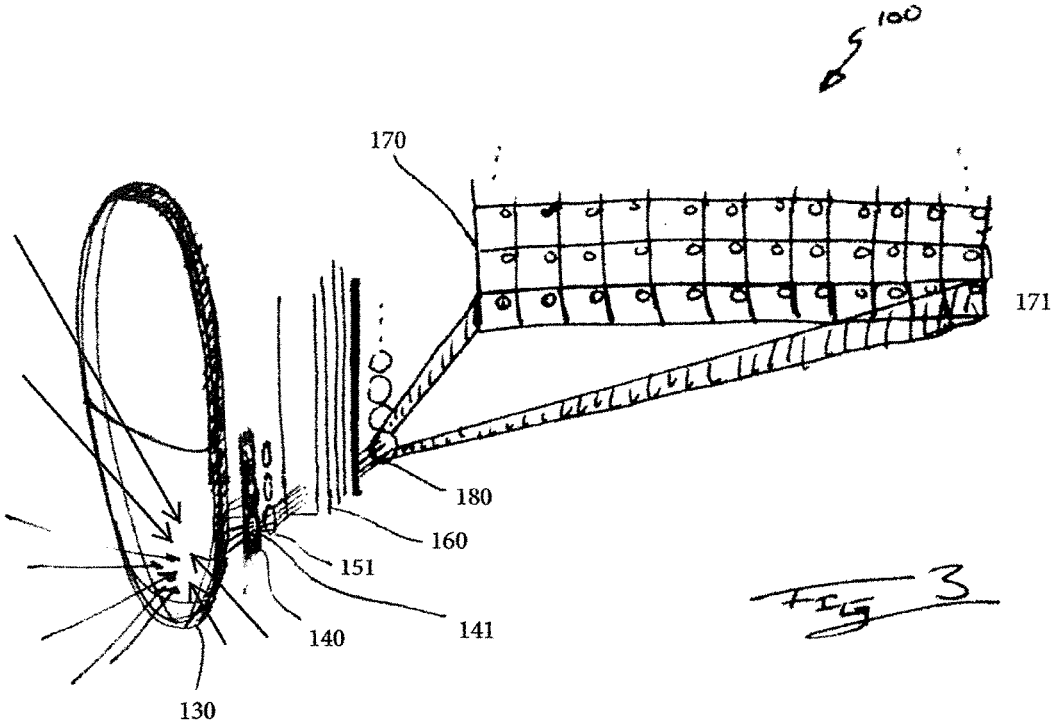

FIG 3

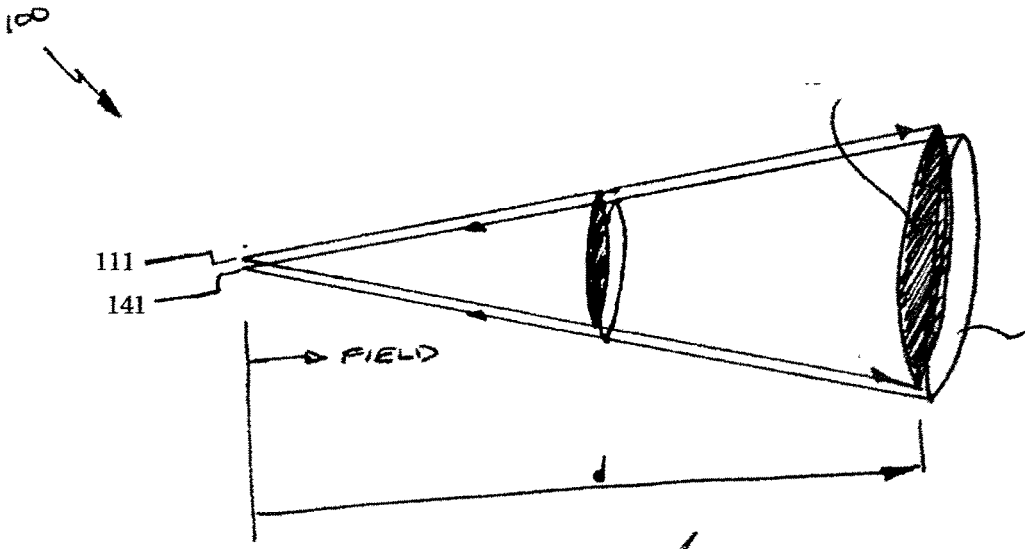

FIG 4

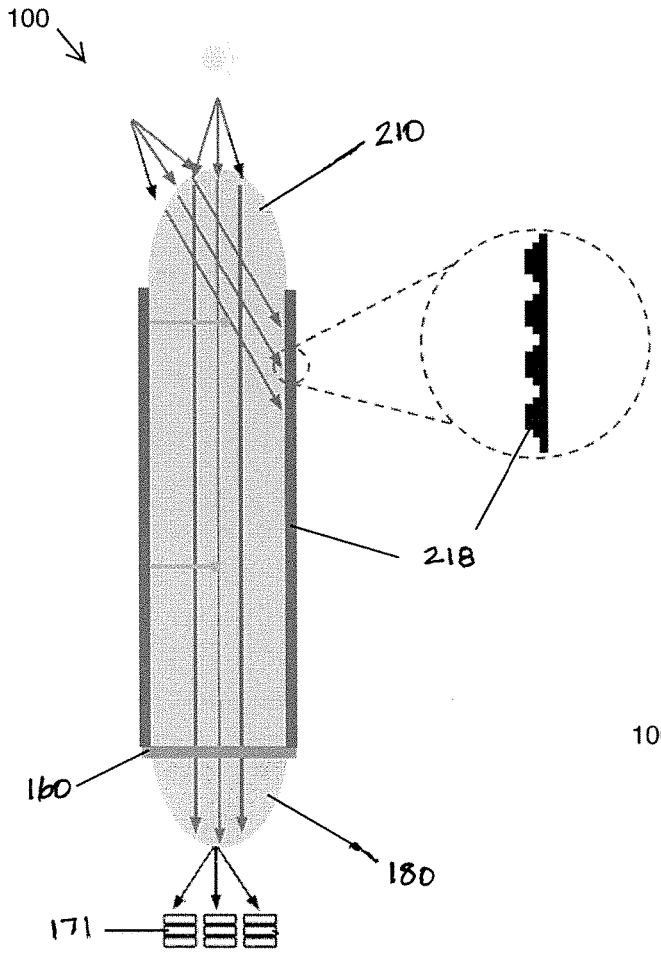

FIGURE 5

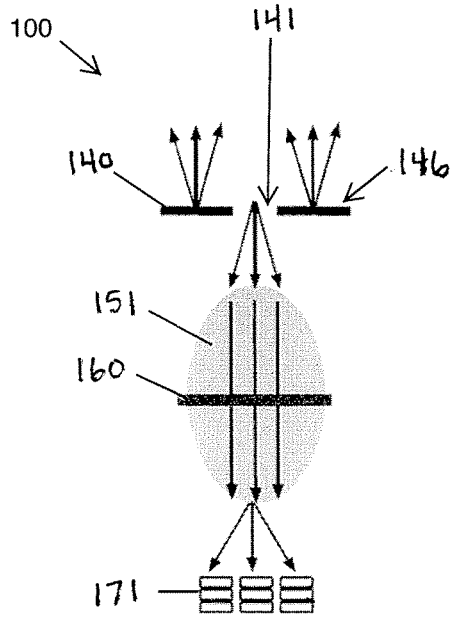

FIGURE 6

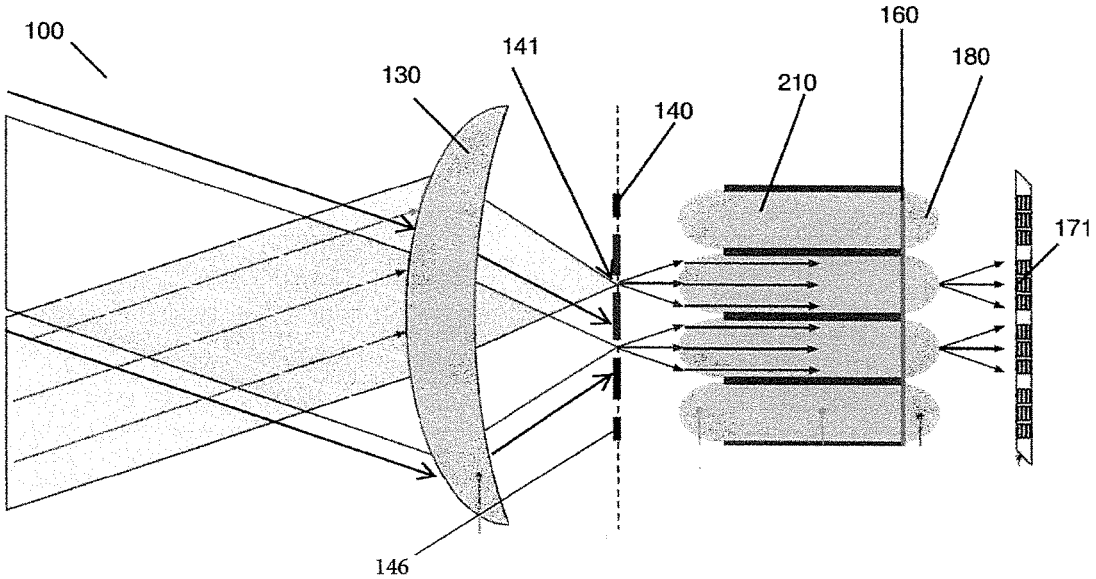
100
130
141
140
210
160
180
171
146

FIG. 7

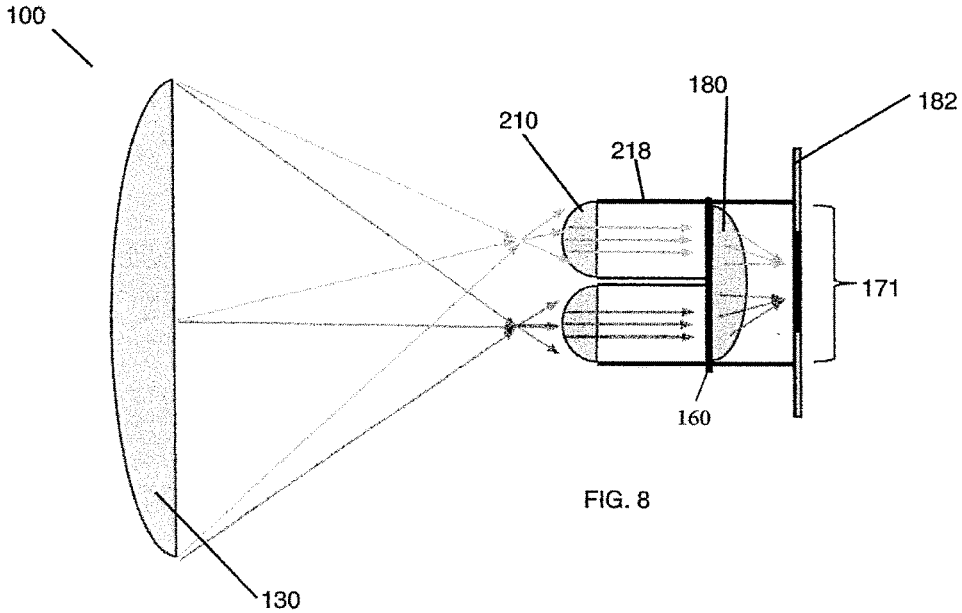
100
210
218
180
182
171
160
130

FIG. 8

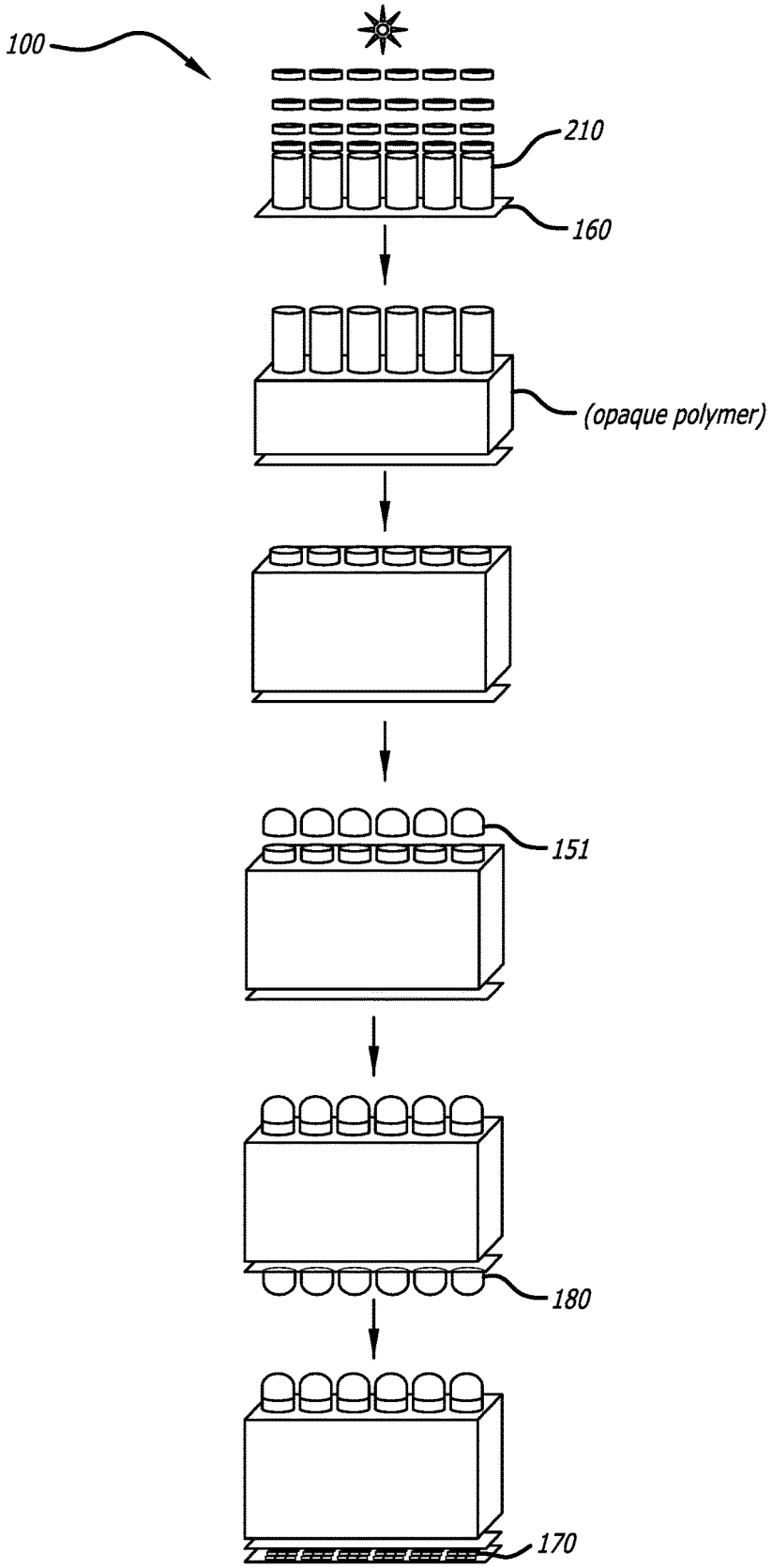

FIG. 9

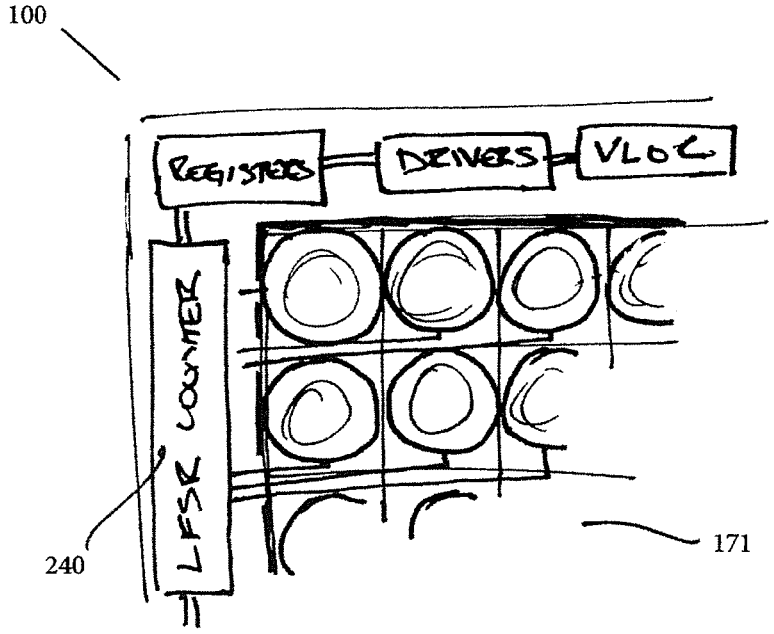

FIG. 10

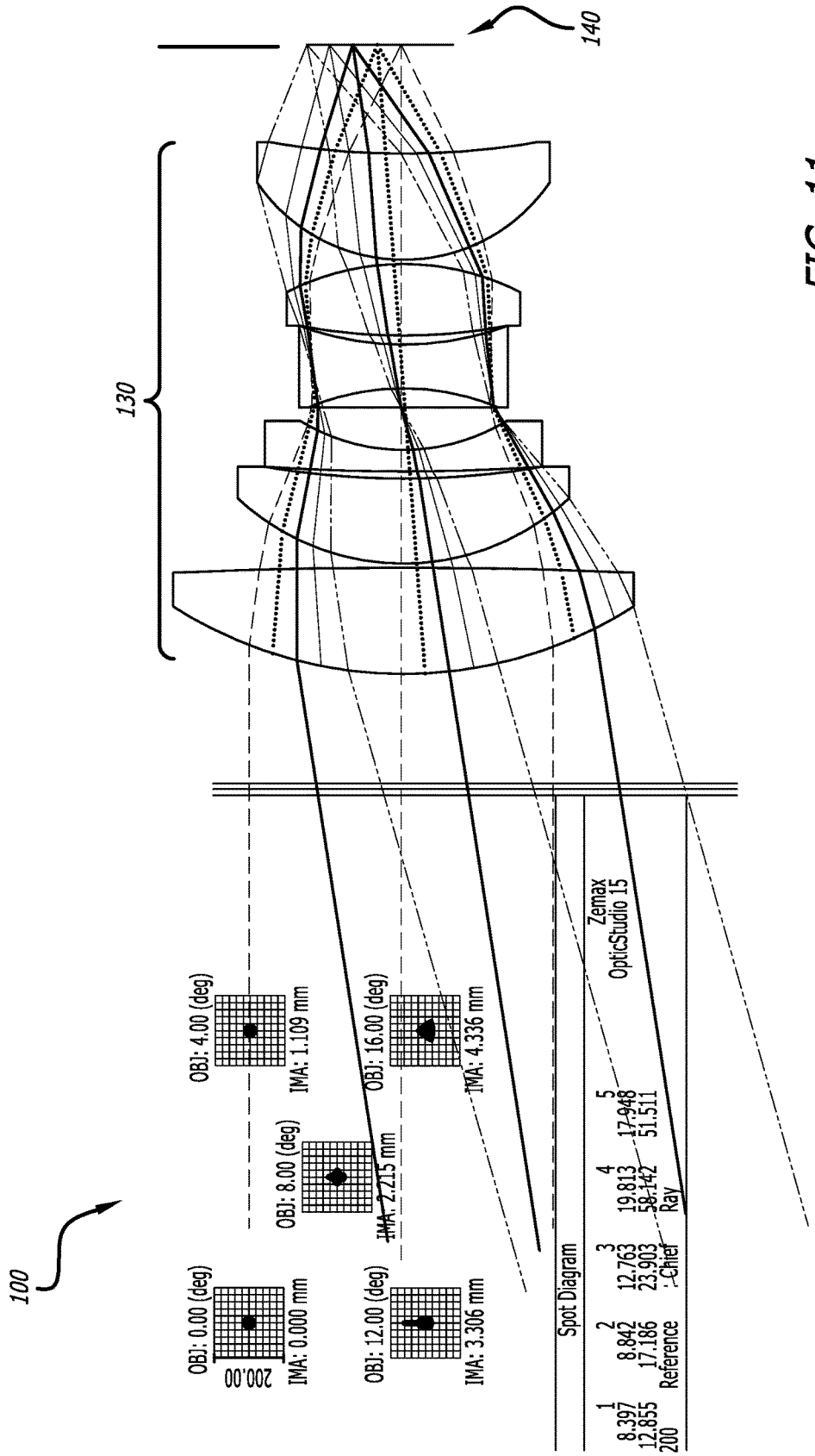
100
130
140
OBJ: 0.00 (deg)
IMA: 0.000 mm
OBJ: 4.00 (deg)
IMA: 1.109 mm
OBJ: 8.00 (deg)
IMA: 2.215 mm
OBJ: 12.00 (deg)
IMA: 3.306 mm
OBJ: 16.00 (deg)
IMA: 4.336 mm
200.00
Spot Diagram
Zemax
OpticStudio 15
1 2 3 4 5
8.397 8.842 12.763 19.813 17.948
12.855 17.186 23.903 58.142 51.511
200 Reference Chief Ray

FIG. 11

OPTICAL SYSTEM FOR COLLECTING DISTANCE INFORMATION WITHIN A FIELD

CROSS-REFERENCE TO RELATED APPLICATIONS

[0001] This application claims the benefit of U.S. Provisional Patent Application No. 62/232,222 filed Sep. 24, 2015.

BACKGROUND OF THE INVENTION

Field of the Invention

[0002] This invention relates generally to the field of optical sensors and more specifically to a new and useful optical system for collecting distance information in the field of optical sensors.

BRIEF DESCRIPTION OF THE DRAWINGS

[0003] FIG. **1** is a schematic representation of a system.
[0004] FIG. **2** is a schematic representation in accordance with one variation of the system.
[0005] FIG. **3** is a schematic representation in accordance with one variation of the system.
[0006] FIG. **4** is a schematic representation in accordance with one variation of the system.
[0007] FIG. **5** is a schematic representation in accordance with one variation of the system.
[0008] FIG. **6** is a schematic representation in accordance with one variation of the system.
[0009] FIG. **7** is a schematic representation in accordance with one variation of the system.
[0010] FIG. **8** is a schematic representation in accordance with one variation of the system.
[0011] FIG. **9** is a flowchart representation in accordance with one variation of the system.
[0012] FIG. **10** is a schematic representation in accordance with one variation of the system.
[0013] FIG. **11** is a schematic representation in accordance with one variation of the system.

DETAILED DESCRIPTION OF THE PREFERRED EMBODIMENTS

[0014] The following description of embodiments of the invention is not intended to limit the invention to these embodiments but rather to enable a person skilled in the art to make and use this invention. Variations, configurations, implementations, example implementations, and examples described herein are optional and are not exclusive to the variations, configurations, implementations, example implementations, and examples they describe. The invention described herein can include any and all permutations of these variations, configurations, implementations, example implementations, and examples.

1. One-Dimensional Optical System: Aperture Array

[0015] As shown in FIG. **1**, a one-dimensional optical system **100** for collecting distance information within a field includes: a set of illumination sources **110** arranged along a first axis, each illumination source in the set of illumination sources **110** configured to output an illuminating beam of an operating wavelength toward a discrete spot in the field ahead of the illumination source; a bulk imaging optic **130** characterized by a focal plane opposite the field; an aperture layer **140** coincident the focal plane, defining a set of apertures **144** in a line array parallel to the first axis, and defining a stop region **146** around the set of apertures **144**, each aperture in the set of apertures **144** defining a field of view in the field coincident a discrete spot output by a corresponding illumination source in the set of illumination sources **110**, the stop region **146** absorbing light rays reflected from surfaces in the field outside of fields of view defined by the set of apertures **144** and passing through the bulk imaging optic **130**; a set of lenses **150**, each lens in the set of lenses **150** characterized by a second focal length, offset from the focal plane opposite the bulk imaging optic **130** by the second focal length, aligned with an aperture in the set of apertures **144**, and configured to collimate light rays passed by the aperture; an optical filter **160** adjacent the set of lenses **150** opposite the aperture layer **140** and configured to pass light rays at the operating wavelength; a set of pixels **170** adjacent the optical filter **160** opposite the set of lenses **150**, each pixel in the set of pixels **170** corresponding to a lens in the set of lenses **150** and including a set of subpixels arranged along a second axis non-parallel to the first axis; and a diffuser **180** interposed between the optical filter **160** and the set of pixels **170** and configured to spread collimated light output from each lens in the set of lenses **150** across a set of subpixels of a corresponding pixel in the set of pixels **170**.

1.1 Applications

[0016] Generally, the one-dimensional optical system **100** (the "system") functions as an image sensor that, when rotated about an axis parallel to a column of apertures, collects three-dimensional distance data of a volume occupied by the system. Specifically, the one-dimensional optical system **100** can scan a volume to collect three-dimensional distance data that can then be reconstructed into a virtual three-dimensional representation of the volume, such as based on recorded times between transmission of illuminating beams from the illumination sources and detection of photons—likely originating from the illumination sources—incident on the set of pixels **170**, based on phase-based measurements techniques, or based on any other suitable distance measurement technique. The system **100** includes: a column of offset apertures arranged behind a bulk imaging optic **130** and defining discrete fields of view in a field ahead of the bulk imaging optic **130** (that is non-overlapping fields of view beyond a threshold distance from the system); a set of illumination sources **110** that project discrete illuminating beams at an operating wavelength into (and substantially only into) the fields of view defined by the apertures; a column of lenses that collimate light rays passed by corresponding apertures; and an optical filter **160** that selectively passes a narrow band of wavelengths of light (i.e., electromagnetic radiation) including the operating wavelength; and a set of pixels **170** that detect incident photons (e.g., count incident photons, tracks times between consecutive incident photons). The system can therefore selectively project illuminating beams into a field ahead of the system according to an illumination pattern that substantially matches—in size and geometry across a range of distances from the system—the fields of view of the apertures. In particular, the illumination sources are configured to illuminate substantially only surfaces in the field ahead of the system that can be

detected by pixels in the system such that minimal power output by the system (via the illumination sources) is wasted by illuminating surfaces in the field for which the pixels are blind. The system can therefore achieve a relatively high ratio of output signal (i.e., illuminating beam power) to input signal (i.e., photons passed to an incident on the pixel array). Furthermore, the set of lenses **150** can collimate light rays passed by adjacent apertures such that light rays incident on the optical filter **160** meet the optical filter **160** at an angle of incidence of approximately 0°, thereby maintaining a relatively narrow band of wavelengths of light passed by the optical filter **160** and achieving a relatively high signal-to-noise ratio ("SNR") for light rays reaching the set of pixels **170**.

[0017] The system includes pixels arranged in a column and aligned with the apertures, and each pixel can be non-square in geometry (e.g., short and wide) to extend the sensing area of the system for a fixed aperture pitch and pixel column height. The system also includes a diffuser **180** that spreads light rays passed from an aperture through the optical filter **160** across the area of a corresponding pixel such that the pixel can detect incident photons across its full width and height thereby increasing the dynamic range of the system.

[0018] The system is described herein as projecting electromagnetic radiation into a field and detecting electromagnetic radiation reflected from a surface in the field back to bulk receiver optic. Terms "illumination beam," "light," "light rays," and "photons" recited herein refer to such electromagnetic radiation. The term "channel" recited herein refers to one aperture in the aperture layer **140**, a corresponding lens in the set of lenses **150**, and a corresponding pixel in the set of pixels **170**.

1.2 Bulk Imaging Optic

[0019] The system includes a bulk imaging optic **130** characterized by a focal plane opposite the field. Generally, the bulk imaging optic **130** functions to project incident light rays from outside the system toward the focal plane where light rays incident on a stop region **146** of the aperture layer **140** are rejected (e.g., mirrored or absorbed) and where light rays incident on apertures in the aperture layer **140** are passed into a lens characterized by a focal length and offset from the focal plane by the focal length.

[0020] In one implementation, the bulk imaging optic **130** includes a converging lens, such as a bi-convex lens (shown in FIG. **2**) or a plano-convex lens, characterized by a particular focal length at the operating wavelength of the system. The bulk imaging optic **130** can also include multiple discrete lens that cooperate to project light rays toward the aperture layer **140** and that are characterized by a composite focal plane opposite the field, as shown in FIG. **11**. However, the bulk imaging optic **130** can be any other suitable type of lens or combination of lenses of any other type or geometry.

1.3 Aperture Layer

[0021] As shown in FIGS. **1** and **2**, the system includes an aperture layer **140** coincident the focal plane, defining a set of apertures **144** in a line array parallel to the axes of the illumination sources, and defining a stop region **146** around the set of apertures **144**, wherein each aperture in the set of apertures **144** defines a field of view in the field coincident a discrete spot output by a corresponding illumination source in the set of illumination sources **110**, and wherein the stop region **146** absorbs and/or reflects light rays reflected from surfaces in the field outside of fields of view defined by the set of apertures **144** and passing through the bulk imaging optic **130**. Generally, the aperture layer **140** defines an array of open regions (i.e., apertures, including one aperture per lens) and closed regions ("stop regions") between adjacent opens. Each aperture in the aperture layer **140** defines a "pinhole" that defines a field of view for its corresponding sense channel and passes light rights reflected from an external surface within its field of the view into its corresponding lens, and each stop region **146** can block light rays incident on select regions of the focal plane from passing into the lens array, as shown in FIG. **6**.

[0022] The aperture layer **140** includes a relatively thin opaque structure coinciding with (e.g., arranged along) the focal plane of the bulk imaging optic **130**, as shown in FIGS. **1** and **2**. For example, the aperture layer **140** can include a 10 micrometer-thick copper, silver, or nickel film deposited (e.g., plated) over a photocurable transparent polymer and then selectively etched to form the array of apertures. In a similar example, a reflective metalized layer or a light-absorbing photopolymer (e.g., a photopolymer mixed with a light absorbing dye) can be deposited onto a glass wafer and selectively cured with a photomask to form the aperture layer **140** and the set of apertures **144**. Alternatively, the aperture layer **140** can include a discrete metallic film that is mechanically or chemically perforated to form the array of apertures, bonded to the lens array, and then installed over the bulk imaging optic **130** along the focal plane. However, the aperture layer **140** can include any other reflective (e.g., mirrored) or light-absorbing material formed in any other way to define the array of apertures along the focal plane of the bulk imaging optic **130**.

[0023] In the one-dimensional optical system **100**, the aperture layer **140** can define a single column of multiple discrete circular apertures of substantially uniform diameter, wherein each aperture defines an axis substantially parallel to and aligned with one lens in the lens array, as shown in FIG. **3**. Adjacent apertures are offset by an aperture pitch distance greater than the aperture diameter and substantially similar to the lens pitch distance, and the aperture layer **140** defines a stop region **146** (i.e., an opaque or reflecting region) between adjacent apertures such that the apertures define discrete, non-overlapping fields of view for their corresponding sense channels. At increasingly smaller diameters up to a diffraction-limited diameter—which is a function of wavelength of incident light and numeric aperture of the bulk imaging lens—an aperture defines a narrower field of view (i.e., a field of view of smaller diameter) and passes a sharper but lower-intensity (attenuated) signal from the bulk imaging optic **130** into its corresponding lens. The aperture layer **140** can therefore define apertures of diameter: greater than the diffraction-limited diameter for the wavelength of light output by the illumination sources (e.g., 900 nm); substantially greater than the thickness of the aperture layer **140**; and less than the aperture pitch distance, which is substantially equivalent to the lens pitch distance and the pixel pitch distance. In one example, aperture layer **140** can define apertures of diameters approaching the diffraction-limited diameter to maximize geometrical selectivity of the field of view of each sense channel. Alternatively, the apertures can be of diameter less that the diffrac-

tion-limited diameter for the wavelength of light output by the illumination sources. In one example, the aperture layer **140** can define apertures of diameters matched to a power output of illumination sources in the system and to a number and photon detection capacity of subpixel photodetectors in each pixel in the set of pixels **170** to achieve a target number of photons incident on each pixel within each sampling period. In this example, each aperture can define a particular diameter that achieves target attenuation range for pixels originating from a corresponding illumination source and incident on the bulk imaging optic **130** during a sampling period. In particular, because an aperture in the aperture layer **140** attenuates a signal passed to its corresponding lens and on to its corresponding pixel, the diameter of the aperture can be matched to the dynamic range of its corresponding pixel.

[0024] In one implementation, a first aperture **141** in the aperture layer **140** passes light rays—reflected from a discrete region of a surface in the field (the field of view of the sense channel) ahead of the bulk imaging optic **130**—into its corresponding lens; a stop region **146** interposed between the first aperture **141** and adjacent apertures in the aperture layer **140** blocks light rays—reflected from a region of the surface outside of the field of view of the first aperture **141**—from passing into the lens corresponding to the first aperture **141**. In the one-dimensional optical system **100**, the aperture layer **140** therefore defines a column of apertures that define multiple discrete, non-overlapping fields of view of substantially infinite depth of field, as shown in FIG. **2**.

[0025] In this implementation, a first aperture **141** in the aperture layer **140** defines a field of view that is distinct and that does not intersect a field of view defined by another aperture in the aperture layer **140**, as shown in FIG. **2**. The set of illumination sources **110** includes a first illumination source **111** paired with the first aperture **141** and configured to project an illuminating beam substantially aligned with (i.e., overlapping) the field of view of the first aperture **141** in the field ahead of the bulk imaging optic **130**. Furthermore, the first illumination source **111** and a bulk transmitting optic **120** can cooperate to project an illuminating beam of a cross-section substantially similar to (and slightly larger than) the cross section of the field of view of the first aperture **141** as various distances from the bulk imaging optic **130**. Therefore light output by the first illumination source **111**—paired with the first aperture **141**—and projected into the field of view of the first aperture **141** can remain substantially outside the fields of view of other apertures in the aperture layer **140**.

[0026] Generally, photons projected into the field by the first illumination source **111** illuminate a particular region of a surface (or multiple surfaces) in the field within the field of view of the first sense channel and are reflected (e.g., scattered) by the surface(s); at least some of these photons reflected by the particular region of a surface may reach the bulk imaging optic **130**, which directs these photons toward the focal plane. Because these photons were reflected by a region of a surface within the field of view of the first aperture **141**, the bulk imaging optic **130** may project these photons into the first aperture **141**, and the first aperture **141** may pass these photons into the first lens **151** (or a subset of these photons incident at an angle relative to the axis of the first aperture **141** below a threshold angle). However, because a second aperture **142** in the aperture layer **140** is offset from the first aperture **141** and because the particular region of the surface in the field illuminated via the first illumination source **111** does not (substantially) coincide with the field of view of the second aperture **142**, photons reflected by the particular region of the surface and reaching the bulk imaging optic **130** are projected into the second aperture **142** and passed to a second lens **152** behind the second aperture **142**, and vice versa, as shown in FIG. **2**. Furthermore, a stop region **146** between the first and second apertures **142** can block photons directed toward the focal plane between the first and second apertures **142** reflected by the bulk imaging optic **130**, thereby reducing crosstalk between the first and second sense channels.

[0027] For a first aperture **141** in the aperture layer **140** paired with a first illumination source **111** in the set of illumination sources **110**, the first aperture **141** in the aperture layer **140** defines a first field of view and passes—into the first lens **151**—incident light rays originating at or reflected from a surface in the field coinciding with the first field of view. Because the first illumination source **111** projects an illuminating beam that is substantially coincident (and substantially the same size as or minimally larger than) the field of view defined by the first aperture **141** (as shown in FIG. **4**), a signal passed into the first lens **151** by the first aperture **141** in the aperture layer **140** can exhibit a relatively high ratio of light rays originating from the first illumination source **111** to light rays originating from other illumination sources in the system. Generally, because various illumination sources in the system may output illuminating beams at different frequencies, duty cycles, and/or power levels, etc. at a particular time during operation, light rays passed from the bulk imaging optic **130** into a first pixel **171** in the set of pixels **170** but originating from an illumination source other than the first illumination source **111** paired with the first pixel **171** constitute noise at the first pixel **171**. Though the relatively small diameters of apertures in the aperture layer **140** may attenuate a total light signal passed from the bulk imaging optic **130** into the set of lenses **150**, each aperture in the aperture layer **140** may pass a relatively high proportion of photons originating from its corresponding illumination source than from other illumination sources in the system; that is, due to the geometry of a particular aperture and its corresponding illumination source, a particular aperture may pass a signal exhibiting a relatively high SNR to its corresponding lens and thus into its corresponding pixel. Furthermore, at smaller aperture diameters in the aperture layer **140**—and therefore smaller fields of view of corresponding channels—the system can pass less noise from solar radiation or other ambient light sources to the set of pixels **170**.

[0028] In one variation, the system includes a second aperture layer interposed between the lens array and the optical filter **160**, wherein the second aperture layer defines a second set of apertures **144**, each aligned with a corresponding lens in the set of lenses **150**, as described above. In this variation, an aperture in the second aperture layer **140** can absorb or reflect errant light rays passed by a corresponding lens, as described above, to further reduce crosstalk between channels, thereby improving SNR within the system. Similarly, the system can additionally or alternatively include a third aperture layer interposed between the optical filter **160** and the diffuser(s) **180**, wherein the third aperture layer defines a third set of apertures **144**, each aligned with a corresponding lens in the set of lenses **150**, as described above. In this variation, an aperture in the third

aperture layer can absorb or reflect errant light rays passed by the light filter, as described above, to again reduce crosstalk between channels, thereby improving SNR within the system.

1.4 Lens Array

[0029] The system includes a set of lenses **150**, wherein each lens in the set of lenses **150** is characterized by a second focal length, is offset from the focal plane opposite the bulk imaging optic **130** by the second focal length, is aligned with a corresponding aperture in the set of apertures **144**, and is configured to collimate light rays passed by the corresponding aperture. Generally, a lens in the set of lenses **150** functions to collimate lights rays passed by its corresponding aperture and to pass these collimated light rays into the optical filter **160**.

[0030] In the one-dimensional optical system **100**, the lenses are arranged in a single column, and adjacent lenses are offset by a uniform lens pitch distance (i.e., a center-to-center-distance between adjacent pixels), as shown in FIG. **3**. The set of lenses **150** is interposed between the aperture layer and the optical filter **160**. In particular, each lens can include a converging lens characterized by a second focal length and can be offset from the focal plane of the bulk imaging optic **130**—opposite the bulk imaging optic **130**—by the second focal length to preserve the aperture of the bulk imaging optic **130** and to collimate light incident on the bulk imaging optic **130** and passed by a corresponding aperture. Each lens in the set of lens can be characterized by a relatively short focal length (i.e., less than a focal length of the bulk imaging optic **130**) and a relatively large marginal ray angle (e.g., a relatively high numeric aperture lens) such that the lens can capture highly-angled light rays projected toward the lens by the extent of the bulk imaging optic **130**. That is, each lens in the set of lens can be characterized by a ray cone substantially matched to a ray cone of the bulk imaging optic **130**.

[0031] Lenses in the set of lenses **150** can be substantially similar. A lens in the set of lenses **150** is configured to collimate light rays focused into its corresponding aperture by the bulk imaging optic **130**. For example, a lens in the set of lenses **150** can include a bi-convex or plano-convex lens characterized by a focal length selected based on the size (e.g., diameter) of its corresponding aperture and the operating wavelength of the system. In this example, the focal length (f) of a lens in the set of lenses **150** can be calculated according to the formula:

$$f = \frac{d^2}{2\lambda}$$

where d is the diameter of the corresponding aperture in the aperture layer and A is the operating wavelength of light output by the illumination source (e.g., 900 nm). The geometry of a lens in the set of lenses **150** can therefore be matched to the geometry of a corresponding aperture in the aperture layer such that the lens passes a substantially sharp image of light rays—at or near the operating wavelength—into the optical filter **160** and thus on to the pixel array.

[0032] However, the set of lenses **150** can include lenses of any other geometry and arranged in any other way adjacent the aperture layer.

1.5 Optical Filter

[0033] As shown in FIG. **3**, the system includes an optical filter **160** adjacent the set of lenses **150** opposite the aperture layer and configured to pass light rays at the operating wavelength. Generally, the optical filter **160** receives electromagnetic radiation across a spectrum from the set of lenses **150**, passes a relatively narrow band of electromagnetic radiation—including radiation at the operating wavelength—to the pixel array, and blocks electromagnetic radiation outside of the band. In particular, electromagnetic radiation other than electromagnetic radiation output by the illumination source—such as ambient light—incident on a pixel in the set of pixels **170** constitutes noise in the system. The optical filter **160** therefore functions to reject electromagnetic radiation outside of the operating wavelength or, more pragmatically, outside of a narrow wavelength band, thereby reducing noise in the system and increasing SNR.

[0034] In one implementation, the optical filter **160** includes an optical bandpass filter that passes a narrow band of electromagnetic radiation substantially centered at the operating wavelength of the system. In one example, the illumination sources output light (predominantly) at an operating wavelength of 900 nm, and the optical filter **160** is configured to pass light between 899.95 nm and 900.05 nm and to block light outside of this band.

[0035] The optical filter **160** may selectively pass and reject wavelengths of light as a function of angle of incidence on the optical filter **160**. Generally, optical bandpass filters may pass wavelengths of light inversely proportional to their angle of incidence on the light optical bandpass filter. For example, for an optical filter **160** including a 0.5 nm-wide optical bandpass filter, the optical filter **160** may pass over 95% of electromagnetic radiation over a sharp band from 899.75 nm to 900.25 nm and reject approximately 100% of electromagnetic radiation below 899.70 nm and above 900.30 nm for light rays incident on the optical filter **160** at an angle of incidence of approximately 0°. However, in this example, the optical filter **160** may pass over 95% of electromagnetic radiation over a narrow band from 899.5 nm to 900.00 nm and reject approximately 100% of electromagnetic radiation over a much wider band below 899.50 nm and above 900.30 nm for light rays incident on the optical filter **160** at an angle of incidence of approximately 15°. Therefore, the incidence plane of the optical filter **160** can be substantially normal to the axes of the lenses, and the set of lenses **150** can collimate light rays received through a corresponding aperture and output these light rays substantially normal to the incidence plane of the optical filter **160** (i.e., at an angle of incidence of approximately 0° on the optical filter). Specifically, the set of lenses **150** can output light rays toward the optical filter **160** at angles of incidence approximating 0° such that substantially all electromagnetic radiation passed by the optical filter **160** is at or very near the operating wavelength of the system.

[0036] In the one-dimensional optical system **100**, the system can include a single optical filter **160** that spans the column of lens in the set of lenses **150**. Alternatively, the system can include multiple optical filters **160**, each adjacent a single lens or a subset of lenses in the set of lenses **150**. However, the optical filter **160** can define any other geometry and can function in any other way to pass only a limited band of wavelengths of light.

1.6 Pixel Array and Diffuser

[0037] The system includes a set of pixels **170** adjacent the optical filter **160** opposite the set of lenses **150**, each pixel in the set of pixels **170** corresponding to a lens in the set of lenses **150** and including a set of subpixels arranged along a second axis non-parallel to the first axis. Generally, the set of pixels **170** are offset from the optical filter **160** opposite the set of lenses **150**, and each pixel in the set of pixels **170** functions to output a single signal or stream of signals corresponding to the count of photons incident on the pixel within one or more sampling periods, wherein each sampling period may be picoseconds, nanoseconds, microseconds, or milliseconds in duration.

[0038] The system also includes a diffuser **180** interposed between the optical filter **160** and the set of pixels **170** and configured to spread collimated light output from each lens in the set of lenses **150** across a set of subpixels of a single corresponding pixel in the set of pixels **170**. Generally, for each lens in the set of lenses **150**, the diffuser **180** functions to spread light rays—previously collimated by the lens and passed by the optical filter **160**—across the width and height of a sensing area within a corresponding pixel. The diffuser **180** can define a single optic element spanning the set of lenses **150**, or the diffuser **180** can include multiple discrete optical elements, such as including one optical diffuser element aligned with each channel in the system.

[0039] In one implementation, a first pixel **171** in the set of pixels **170** includes an array of single-photon avalanche diode detectors (hereinafter "SPADs"), and the diffuser **180** spreads lights rays—previously passed by a corresponding first aperture **141**, collimated by a corresponding first lens **151**, and passed by the optical filter **160**—across the area of the first pixel **171**, as shown in FIGS. **3**, **5**, and **6**. Generally, adjacent apertures can be aligned and offset vertically by an aperture pitch distance, adjacent lenses can be aligned and offset vertically by a lens pitch distance substantially identical to the aperture pitch distance, and adjacent pixels can be aligned and offset vertically by a pixel pitch distance substantially identical to the lens and aperture pitch distances. However, the pixel pitch distance may accommodate only a relatively small number of (e.g., two) vertically-stacked SPADs. Each pixel in the set of pixels **170** can therefore define an aspect ratio greater than 1:1, and the diffuser **180** can spread light rays passed by the optical filter **160** according to the geometry of a corresponding pixel in order to accommodate a larger sensing area per pixel.

[0040] In one example, each pixel in the set of pixels **170** is arranged on an image sensor, and a first pixel **171** in the set of pixels **170** includes a single row of 16 SPADs spaced along a lateral axis perpendicular to a vertical axis bisecting the column of apertures and lenses. In this example, the height of a single SPAD in the first pixel **171** can be less than the height (e.g., diameter) of the first lens **151**, but the total length of the 16 SPADs can be greater than the width (e.g., diameter) of the first lens **151**; the diffuser **180** can therefore converge light rays output from the first lens **151** to a height corresponding to the height of a SPAD at the plane of the first pixel **171** and can diverge light rays output from the first lens **151** to a width corresponding to the width of the 16 SPADs at the plane of the first pixel **171**. In this example, the remaining pixels in the set of pixels **170** can include similar rows of SPADs, and the diffuser **180** can similarly converge and diverge light rays passed by corresponding apertures onto corresponding pixels.

[0041] In the foregoing example, the aperture layer can include a column of 16 like apertures, the set of lenses **150** can include a column of 16 like lenses arranged behind the aperture layer, and the set of pixels **170** can include a set of 16 like pixels—each including a similar array of SPADs—arranged behind the set of lenses **150**. For a 6.4 mm-wide, 6.4 mm-tall image sensor, each pixel can include a single row of 16 SPADs, wherein each SPAD is electrically coupled to a remote analog front-end processing electronics/digital processing electronics circuit **240**. Each SPAD can be arranged in a 400 μm-wide, 400 μm-tall SPAD area and can define an active sensing area approaching 400 μm in diameter. Adjacent SPADs can be offset by a SPAD pitch distance of 400 μm. In this example, the aperture pitch distance along the vertical column of apertures, the lens pitch distance along the vertical column of lenses, and the pixel pitch distance along the vertical column of pixels can each be approximately 400 μm accordingly. For the first sense channel in the system (i.e., the first aperture **141**, the first lens **151**, and the first pixel **171**, etc.), a first diffuser **180** can diverge a cylindrical column of light rays passed from the first lens **151** through the optical filter **160**—such as a column of light approximately 100 μm in diameter for an aperture layer aspect ratio of 1:4—to a height of approximately 400 μm aligned vertically with the row of SPADs in the first pixel **171**. The first diffuser can similarly diverge the cylindrical column of light rays passed from the first lens **151** through the optical filter **160** to a width of approximately 6.4 μm centered horizontally across the row of SPADs in the first pixel **171**. Other diffusers **180** in the system can similarly diverge (or converge) collimated light passed by corresponding lenses across corresponding pixels in the set of pixels **170**. Therefore, in this example, by connecting each SPAD (or each pixel) to a remote analog front-end processing electronics/digital processing electronics circuit **240** and by incorporating diffusers **180** that spread light passed by the optical filter **160** across the breadths and heights of corresponding pixels, the system can achieve a relatively high sensing area fill factor across the imaging sensor.

[0042] Therefore, in the one-dimensional optical system **100**, pixels in the set of pixels **170** can include an array of multiple SPADS arranged in aspect ratio exceeding 1:1, and the diffuser **180** can spread light rays across corresponding non-square pixels that enables a relatively large numbers of SPADs to be tiled across a single pixel to achieve a greater dynamic range across the image sensor than an image sensor with a single SPAD per pixel, as shown in FIG. **3**. In particular, by incorporating multiple SPADs per pixel (i.e., per sense channel), a first sense channel in the system can detect multiple incident photons—originating from a surface in the field bound by a field of view defined by the first aperture **141**—within the span of the dead time characteristic of the SPADs. The first sense channel can therefore detect a "brighter" surface in its field of view. Additionally or alternatively, the first pixel **171** in the first sense channel can be sampled faster than the dead time characteristic of SPADs in the first pixel **171** because, though a first subset of SPADs in the first pixel **171** may be down (or "dead") during a first sampling period due to collection of incident photons during the first sampling period, other SPADs in the first pixel **171** remain on (or "alive") and can therefore collect incident photons during a subsequent sampling period. Furthermore, by incorporating pixels characterized by relatively

high aspect ratios of photodetectors, the image sensor can include pixels offset by a relatively small pixel pitch, but the system **100** can still achieve a relatively high dynamic range pixel.

[0043] However, pixels in the set of pixels **170** can include any other number of SPADs arranged in any other arrays, such as in a 64-by-1 grid array (as described above), in a 32-by-2 grid array, or in a 16-by-4 grid array, and the diffuser **180** can converge and/or diverge collimated light rays onto corresponding pixels accordingly in any other suitable way. Furthermore, rather than (or in addition to) SPADs, each pixel in the set of pixels **170** can include one or more linear avalanche photodiodes, Geiger mode avalanche photodiodes, photomultipliers, resonant cavity photodiodes, QUANTUM DOT detectors, or other types of photodetectors arranged as described above, and the diffuser(s) **180** can similarly converge and diverge signals passed by the optical filter(s) **160** across corresponding pixels, as described herein.

1.7 Illumination Sources

[0044] The system includes a set of illumination sources **110** arranged along a first axis, each illumination source in the set of illumination sources **110** configured to output an illuminating beam of an operating wavelength toward a discrete spot in a field ahead of the illumination source. Generally, each illumination source functions to output an illuminating beam coincident a field of view defined by a corresponding aperture in the set of apertures **144**, as shown in FIGS. **1** and **2**.

[0045] In one implementation, the set of illumination sources **110** includes a bulk transmitter optic and one discrete emitter per sense channel. For example, the set of illumination sources **110** can include a monolithic VCSEL arrays including a set of discrete emitters. In this implementation, the bulk transmitter optic can be substantially identical to the bulk imaging optic **130** in material, geometry (e.g., focal length), thermal isolation, etc., and the bulk transmitter optic is adjacent and offset laterally and/or vertically from the bulk imaging optic **130**. In a first example, set of illumination sources **110** includes a laser array including discrete emitters arranged in a column with adjacent emitters offset by an emitter pitch distance substantially identical to the aperture pitch distance. In this first example, each emitter outputs an illuminating beam of diameter substantially identical to or slightly greater than the diameter of a corresponding aperture in the apertures layer, and the column of emitters is arranged along the focal plane of the bulk transmitter optic such that each illuminating beam projected from the bulk transmitter optic into the field intersects and is of substantially the same size and geometry as the field of view of the corresponding sense channel, as shown in FIG. **4**. Therefore, substantially all power output by each emitter in the set of illumination sources **110** can be projected into the field of view of its corresponding sense channel with relatively minimal power wasted illuminating surfaces in the field outside of the fields of view of the sense channels.

[0046] In a second example, the discrete emitters are similarly arranged in a column with adjacent emitters offset by an emitter pitch distance twice the aperture pitch distance, as shown in FIG. **2**. In this second example, each emitter is characterized by an illuminating active area (or aperture) of diameter approximately (or slightly greater than) twice the diameter of a corresponding aperture in the apertures layer, and the column of emitters is offset behind the bulk transmitter optic by twice the focal length of the bulk transmitter optic such that each illuminating beam projected from the bulk transmitter optic into the field intersects and is of substantially the same size and geometry as the field of view of the corresponding sense channel, as described above. Furthermore, for the same illumination beam power density, an illuminating beam output by an emitter in this second example may contain four times the power of an illuminating beam output by an emitter in the first example described above. The system can therefore include a set of emitter arranged according to an emitter pitch distance, configured to output illuminating beams of diameter, and offset behind the bulk transmitter optic by an offset distance as a function of a scale factor (e.g., 2.0 or 3.0) and 1) the aperture pitch distance in the aperture layer, 2) the diameter of apertures in the aperture layer, and 3) the focal length of bulk transmitter optic, respectively. The system can therefore include an illuminating subsystem that is proportionally larger than a corresponding receiver subsystem to achieve greater total output illumination power within the same beam angles and fields of view of corresponding channels in the receiver subsystem.

[0047] The system can also include multiple discrete sets of illumination sources, each set of illumination sources **110** paired with a discrete bulk transmitter optic adjacent the bulk imaging optic **130**. For example, the system can include a first bulk transmitter optic, a second bulk transmitter optic, and a third bulk transmitter optic patterned radially about the bulk imaging optic **130** at a uniform radial distance from the center of the bulk imaging optic **130** and spaced apart by an angular distance of 120°. In this example, the system can include a laser array with one emitter—as described above—behind each of the first, second, and third bulk transmitter optics. Each discrete laser array and its corresponding bulk transmitter optic can thus project a set of illuminating beams into the fields of view of defined by corresponding in the apertures in the aperture layer. Therefore, in this example, the three discrete laser arrays and the three corresponding bulk transmitter optics can cooperate to project three times the power onto the fields of view of the sense channels in the system, as compared to a single laser array and one bulk transmitter optic. Additionally or alternatively, the system can include multiple discrete layer arrays and bulk transmitter optics to both: 1) achieve a target illumination power output into the field of view of each sensing channel in the receiver subsystem with multiple lower-power emitters per sensing channel; and 2) distribute optical energy over a larger area in the near-field to achieve an optical energy density less than a threshold allowable optical energy density for the human eye.

[0048] However, the system can include any other number and configuration of illumination source sets and bulk transmitter optics configured to illuminate fields of view defined by the sense channels. The set of illumination sources **110** can also include any other suitable type of optical transmitter, such as a 1×16 optical splitter powered by a single laser diode, a side-emitting laser diode array, an LED array, or a quantum dot LED array, etc.

1.8 Fabrication

[0049] In one implementation, the bulk receiver lens, the aperture layer, the set of lenses **150**, the optical filter **160**,

and the diffuser **180** are fabricated and then aligned with and mounted onto an image sensor. For example, the optical filter **160** can be fabricated by coating a fused silica substrate. Photoactive optical polymer can then be deposited over the optical filter **160**, and a lens mold can be placed over the photoactive optical polymer and a UV light source activated to cure the photoactive optical polymer in the form of lenses patterned across the optical filter **160**. Standoffs can be similarly molded or formed across the optical filter **160** via photolithography techniques, and an aperture layer defined by a selectively-cured, metallized glass wafer can then be bonded or otherwise mounted to the standoffs to form the aperture layer. The assembly can then be inverted, and a set of discrete diffusers and standoffs can be similarly fabricated across the opposite side of the optical filter **160**. A discrete image sensor can then be aligned with and bonded to the standoffs, and a bulk imaging optic **130** can be similarly mounted over the aperture layer.

[0050] Alternatively, photolithography and wafer level bonding techniques can be implemented to fabricate the bulk imaging optics, the aperture layer, the set of lenses **150**, the optical filter **160**, and the diffuser **180** directly on to the un-diced semiconductor wafer containing the detector chips in order to simplify manufacturing, reduce cost, and reduce optical stack height for decreased pixel crosstalk.

2. One-Dimensional Optical System: Lens Tube

[0051] One variation of the system includes: a set of illumination sources **110** arranged along a first axis, each illumination source in the set of illumination sources **110** configured to output an illuminating beam of an operating wavelength toward a discrete spot in a field ahead of the illumination source; a bulk imaging optic **130** characterized by a focal plane opposite the field; a set of lens tubes **210** arranged in a line array parallel to the first axis, each lens tube in the set of lens tubes **210** including: a lens characterized by a focal length, offset from the focal plane by the focal length, and configured to collimate light rays reflected into the bulk imaging optic **130** from a discrete spot in the field illuminated by a corresponding illumination source in the set of optics into the bulk imaging optic **130**; and a cylindrical wall **218** extending from the lens opposite the focal plane, defining a long axis substantially perpendicular to the first axis, and configured to absorb incident light rays reflected into the bulk imaging optic **130** from a region in the field outside the discrete spot illuminated by the corresponding illumination source. In this variation, the system also includes: an optical filter **160** adjacent the set of lens tubes **210** opposite the focal plane and configured to pass light rays at the operating wavelength; a set of pixels **170** adjacent the optical filter **160** opposite the set of lenses **150**, each pixel in the set of pixels **170** corresponding to a lens in the set of lenses **150** and including a set of subpixels aligned along a third axis perpendicular to the first axis; and a diffuser **180** interposed between the optical filter **160** and the set of pixels **170** and configured to spread collimated light output from each lens in the set of lenses **150** across a set of subpixels of a corresponding pixel in the set of pixels **170**.

[0052] Generally, in this variation, the system includes a lens tube in replacement of (or in addition to) each aperture and lens pair described above. In this variation, each lens tube can be characterized by a second (short) focal length and can be offset from the focal plane of the bulk imaging optic **130** by the second focal length to preserve the aperture of the bulk imaging optic **130** and to collimate incident light received from the bulk imaging optic **130**, as described above and as shown in FIGS. **5** and **7**.

[0053] Each lens tube also defines an opaque cylindrical wall **218** defining an axis normal to the incidence plane of the adjacent optical filter **160** and configured to absorb incident light rays, as shown in FIG. **5**. Generally, at greater axial lengths, the cylindrical wall **218** of a lens tube may absorb light rays passing through the lens tube at shallower angles to the axis of the lens tube, thereby reducing the field of view of the lens tube (which may be similar to decreasing the diameter of an aperture in the aperture layer up to the diffraction-limited diameter, as described above) and yielding an output signal of collimated light rays nearer to perpendicular to the incidence plane of the optical filter **160**. Each lens tube can therefore define an elongated cylindrical wall **218** of length sufficient to achieve a target field of view and to pass collimated light rays at maximum angles to the axis of the lens tube less than a threshold angle. In this variation, a lens tube can thus function as an aperture-sense pair described above to define a narrow field of view and to output substantially collimated light to the adjacent optical filter **160**.

[0054] The cylindrical wall **218** of a lens tube can define a coarse or patterned opaque interface about a transparent (or translucent) lens material, as shown in FIG. **5**, to increase absorption and decrease reflection of light rays incident on the cylindrical wall **218**. Each lens tube (and each lens described above) can also be coated with an anti-reflective coating.

[0055] As shown in FIG. **9**, in this variation, the set of lens tubes **210** can be fabricated by implementing photolithography techniques to pattern a photoactive optical polymer (e.g., SU8) onto the optical filter **160** (e.g., on a silicon wafer defining the optical filter). A light-absorbing polymer can then be poured between the lens tubes and cured. A set of lenses **150** can then be fabricated (e.g., molded) separately and then bonded over the lens tubes. Alternatively, lenses can be fabricated directly onto the lens tubes by photolithography techniques. Yet alternatively, a mold for lenses can be cast directly onto the lens tubes by injecting polymer into a mold arranged over the lens tubes. A singular diffuser **180** or multiple discrete diffusers **180** can be similarly fabricated and/or assembled on the optical filter **160** opposite the lens tubes. Standoffs extending from the optical filter **160** can be similarly fabricated or installed around the diffuser(s) **180**, and the image sensor can be aligned with and bonded to the standoffs opposite the optical filter **160**. Other optical elements within the system (e.g., the bulk imaging lens, the bulk transmitting lens, etc.) can be fabricated according to similar techniques and with similar materials.

3. Two-Dimensional Optical System

[0056] Another variation of the system includes: a set of illumination sources **110** arranged in a first rectilinear grid array, each illumination source in the set of illumination sources **110** configured to output an illuminating beam of an operating wavelength toward a discrete spot in a field ahead of the illumination source; a bulk imaging optic **130** characterized by a focal plane opposite the field; an aperture layer coincident the focal plane, defining a set of apertures **144** in a second rectilinear grid array proportional to the first rectilinear grid array, and defining a stop region **146** around

the set of apertures **144**, each aperture in the set of apertures **144** defining a field of view in the field coincident a discrete spot output by a corresponding illumination source in the set of illumination sources **110**, the stop region **146** absorbing light rays reflected from surfaces in the field outside of fields of view defined by the set of apertures **144** and passing through the bulk imaging optic **130**; a set of lenses **150**, each lens in the set of lenses **150** characterized by a second focal length, offset from the focal plane opposite the bulk imaging optic **130** by the second focal length, aligned with an aperture in the set of apertures **144**, and configured to collimate light rays passed by the aperture; an optical filter **160** adjacent the set of lenses **150** opposite the aperture layer and configured to pass light rays at the operating wavelength; a set of pixels **170** adjacent the optical filter **160** opposite the set of lenses **150**, each pixel in the set of pixels **170** aligned with a subset of lenses in the set of lenses **150**; and a diffuser **180** interposed between the optical filter **160** and the set of pixels **170** and configured to spread collimated light output from each lens in the set of lenses **150** across a corresponding pixel in the set of pixels **170**.

[0057] Generally, in this variation, the system includes a two-dimensional grid array of channels (i.e., aperture, lens, and pixel sets or lens tube and pixel sets) and is configured to image a volume occupied by the system in two dimensions. The system can collect one-dimensional distance data—such as counts of incident photons within a sampling period and/or times between consecutive photons incident on pixels of known position corresponding to known fields of view in the field—across a two-dimensional field. The one-dimensional distance data can then be merged with known positions of the fields of view for each channel in the system to reconstruct a virtual three-dimensional representation of the field ahead of the system.

[0058] In this variation, the aperture layer can define a grid array of apertures, the set of lenses **150** can be arranged in a similar grid array with one lens aligned with one aperture in the aperture layer, and the set of pixels **170** can include one pixel per aperture and lens pair, as described above. For example, the aperture layer can define a 24-by-24 grid array of 200-μm-diameter apertures offset vertically and laterally by an aperture pitch distance of 300 μm, and the set of lenses **150** can similarly define a 24-by-24 grid array of lenses offset vertically and laterally by a lens pitch distance of 300 μm. In this example, the set of pixels **170** can include a 24-by-24 grid array of 300-μm-square pixels, wherein each pixel includes a 3×3 square array of nine 100-μm-square SPADs.

[0059] Alternatively, in this variation, the set of pixels **170** can include one pixel per group of multiple aperture and lens pairs. In the foregoing example, the set of pixels **170** can alternatively include a 12-by-12 grid array of 600-μm-square pixels, wherein each pixel includes a 6×6 square array of 36 100-μm-square SPADs and wherein each pixel is aligned with a group of four adjacent lenses in a square grid. In this example, for each group of four adjacent lenses, the diffuser **180**: can bias collimated light rays output from a lens in the (1,1) position in the square grid upward and to the right to spread light rays passing through the (1,1) lens across the full breadth and width of the corresponding pixel; can bias collimated light rays output from a lens in the (2,1) position in the square grid upward and to the left to spread light rays passing through the (2,1) lens across the full breadth and width of the corresponding pixel; can bias collimated light rays output from a lens in the (1,2) position in the square grid downward and to the right to spread light rays passing through the (1,2) lens across the full breadth and width of the corresponding pixel; and can bias collimated light rays output from a lens in the (2,2) position in the square grid downward and to the left to spread light rays passing through the (2,2) lens across the full breadth and width of the corresponding pixel, as shown in FIG. **8**.

[0060] In the foregoing example, for each group of four illumination sources in a square grid and corresponding to one group of four lenses in a square grid, the system can actuate one illumination source in the group of four illumination sources at any given instance in time. In particular, for each group of four illumination sources in a square grid corresponding to one pixel in the set of pixels **170**, the system can actuate a first illumination source **111** in a (1,1) position during a first sampling period to illuminate a field of view defined by a first aperture **141** corresponding to a lens in the (1,1) position in the corresponding group of four lenses, and the system can sample all 36 SPADs in the corresponding pixel during the first sampling period. The system can then shut down the first illumination source **111** and actuate a second illumination source **112** in a (1,2) position during a subsequent second sampling period to illuminate a field of view defined by a second aperture **142** corresponding to a lens in the (1,2) position in the corresponding group of four lenses, and the system can sample all 36 SPADs in the corresponding pixel during the second sampling period. Subsequently, the system can then shut down the first and second illumination sources **112** and actuate a third illumination source in a (2,1) position during a subsequent third sampling period to illuminate a field of view defined by a third aperture corresponding to a lens in the (2,1) position in the corresponding group of four lenses, and the system can sample all 36 SPADs in the corresponding pixel during the third sampling period. Finally, the system can shut down the first, second, and third illumination sources and actuate a fourth illumination source in a (2,2) position during a fourth sampling period to illuminate a field of view defined by a fourth aperture corresponding to a lens in the (2,2) position in the corresponding group of four lenses, and the system can sample all 36 SPADs in the corresponding pixel during the fourth sampling period. The system can repeat this process throughout its operation.

[0061] Therefore, in the foregoing example, the system can include a set of pixels **170** arranged across an image sensor 7.2 mm in width and 7.2 mm in length and can implement a scanning schema such that each channel in the system can access (can project light rays onto) a number of SPADs otherwise necessitating a substantially larger image sensor (e.g., a 14.4 mm by 14.4 mm image sensor). In particular, the system can implement a serial scanning schema per group of illumination sources to achieve an exponential increase in the dynamic range of each channel in the system. In particular, in this variation, the system can implement the foregoing imaging techniques to increase imaging resolution of the system.

[0062] In the foregoing implementation, the system can also include a shutter **182** between each channel and the image sensor, and the system can selectively open and close each shutter **182** when the illumination source for the corresponding channel is actuated and deactivated, respectively. For example, the system can include one independently-operable electrochromic shutter **182** interposed

between each lens, and the system can open the electrochromic shutter **182** over the (1,1) lens in the square-gridded group of four lenses and close electrochromic shutters **182** over the (1,2), (2,1), and (2,2) lens when the (1,1) illumination source is activated, thereby rejecting noise passing through the (1,2), (2,1), and (2,2) lens from reaching the corresponding pixel on the image sensor. The system can therefore selectively open and close shutters **182** between each channel and the image sensor to increase SNR per channel during operation. Alternatively, the system can include one independently-operable electrochromic shutter **182** arranged over select regions of each pixel, as shown in FIG. **8**, wherein each electrochromic shutter **182** is aligned with a single channel (i.e., with a single lens in the set of lenses). The system can alternatively include MEMS mechanical shutters or any other suitable type of shutter interposed between the set of lenses **150** and the image sensor.

[0063] In this variation, the system can define two-dimension grid arrays of apertures, lenses, diffusers, and/or pixels characterized by a first pitch distance along a first (e.g., X) axis and a second pitch distance—different from the first pitch distance—along a second (e.g., Y) axis. For example, the image sensor can include pixels offset by a 25 μm horizontal pitch and a 300 μm vertical pitch, wherein each pixel includes a single row of twelve subpixels.

[0064] However, in this variation, the two-dimensional optical system can include an array of any other number and pattern of channels (e.g., apertures, lenses (or lens tubes), and diffusers) and pixels and can execute any other suitable scanning schema to achieve higher spatial resolutions per channel than the raw pixel resolution of the image sensor. The system can additionally or alternatively include a converging optic, a diverging optic, and/or any other suitable type of optical element to spread light rights passed from a channel across the breadth of a corresponding pixel.

[0065] As a person skilled in the art will recognize from the previous detailed description and from the figures and claims, modifications and changes can be made to the embodiments of the invention without departing from the scope of this invention as defined in the following claims.

What is claimed is:

1. An optical channel for receiving photons and detecting the photons comprising:
- a bulk imaging optic;
- an aperture layer located at an imaging plane of the bulk optic;
- a collimating lens layer behind the aperture layer and separated therefrom by a focal length of the collimating lens layer;
- an optical filter behind the collimating lens layer; and
- a pixel offset from the optical filter opposite the collimating lens layer, and responsive to photons incident on the pixel.

2. The optical channel of claim **1** further comprising a diffuser that spreads light rays passed from the aperture layer through the optical filter across an area of a corresponding pixel, whereby the pixel can detect incident photons across its full width and height to increase the dynamic range of the system.

3. The optical channel of claim **1** wherein the pixel comprises at least one single-photon avalanche diode detector.

4. The optical channel of claim **1** wherein the pixel comprises at least one resonant cavity photodiodes.

5. A set of optical channels of claim **1** having the set of pixels of the set of optical channels being arranged on a single image sensor.

6. The set of optical channels of claim **5** wherein multiple sets of optical channels are fabricated on the same wafer and diced to yield multiple sets of optical channels.

7. The set of optical channels of claim **5** further comprising a bulk imaging optic having apertures at a focal plane projected into a field defining fields of view for each optical channel.

8. The set of optical channels with the bulk imaging optic of claim **7** further comprising a bulk transmitter optic having a set of optical emitters at a focal plane projecting light into a field defining transmitter fields of view that are overlapping with the fields of view defined by the set of optical channels, and operating at a same wavelength as the set of optical channels and a controller to form an active illumination optical sensor.

9. The active illumination optical sensor of claim **8** having the set of optical emitters being arranged on a single semiconductor die.

10. The active illumination optical sensor of claim **8** having the set of optical emitters being lasers.

* * * * *