US011374458B2

(12) **United States Patent**
**Johansen**

(10) **Patent No.: US 11,374,458 B2**
(45) **Date of Patent: Jun. 28, 2022**

(54) **ELECTRIC MOTOR WITH FLUID COOLING**

(71) Applicant: **DEKALB BLOWER INC.**, Yorkville, IL (US)

(72) Inventor: **Eric J. Johansen**, Newark, IL (US)

(73) Assignee: **DEKALB BLOWER INC.**, Yorkville, IL (US)

( * ) Notice: Subject to any disclaimer, the term of this patent is extended or adjusted under 35 U.S.C. 154(b) by 170 days.

(21) Appl. No.: **16/726,711**

(22) Filed: **Dec. 24, 2019**

(65) **Prior Publication Data**

US 2020/0328649 A1 Oct. 15, 2020

**Related U.S. Application Data**

(60) Provisional application No. 62/750,053, filed on Oct. 24, 2018.

(51) **Int. Cl.**

| | |
|---|---|
| ***H02K 5/20*** | (2006.01) |
| ***H02K 9/193*** | (2006.01) |
| ***H02K 9/06*** | (2006.01) |

(52) **U.S. Cl.**

CPC ..... ***H02K 5/20*** (2013.01); ***H02K 5/203*** (2021.01); ***H02K 9/06*** (2013.01); ***H02K 9/193*** (2013.01)

(58) **Field of Classification Search**

CPC ..... H02K 5/20; H02K 9/19; H02K 9/193; H02K 5/203; H02K 5/207

See application file for complete search history.

(56) **References Cited**

U.S. PATENT DOCUMENTS

| | | | |
|---|---|---|---|
| 1,730,372 | A | 10/1929 | Lawrie |
| 2,106,841 | A | 2/1938 | Baker |
| 2,237,451 | A | 4/1941 | Samuels |
| 2,424,501 | A | 7/1947 | Place |
| 2,473,813 | A | 6/1949 | Nygren |
| 2,653,755 | A | 9/1953 | Kruhmin |
| 3,275,223 | A | 9/1966 | Fowell |
| 3,401,871 | A | 9/1968 | Crowe |
| 3,907,307 | A | 9/1975 | Maurer et al. |
| 3,943,717 | A | 3/1976 | Schexnayder |
| 4,040,769 | A | 8/1977 | Britz |

(Continued)

FOREIGN PATENT DOCUMENTS

EP 0631365 A2 * 12/1994 ..... H02K 5/20

OTHER PUBLICATIONS

Garden City Fan & Blower Co., "PF2 Propeller. Plug Units," Bulletin PF681C 1982, p. 13.

*Primary Examiner* — Quyen P Leung
*Assistant Examiner* — Eric Johnson
(74) *Attorney, Agent, or Firm* — von Briesen & Roper, s.c.

(57) **ABSTRACT**

The present disclosure relates to electric motors having fluid cooling by fluid flow through a cooling jacket cavity. An electric motor may include a cylindrical housing wall, a stator mounted to an inner surface of the housing wall, a motor shaft mounted for rotation within the housing wall, and a cooling jacket wall surrounding and concentric with the housing wall. A housing wall outer surface and a jacket wall inner surface define the cooling jacket cavity, and the cooling jacket wall has a fluid inlet port and a fluid outlet port. Cooling fluid flows into the cooling jacket cavity through the fluid inlet, flows through the cooling jacket cavity over the housing wall outer surface, and flows out of the cooling jacket cavity through the fluid outlet.

**19 Claims, 12 Drawing Sheets**

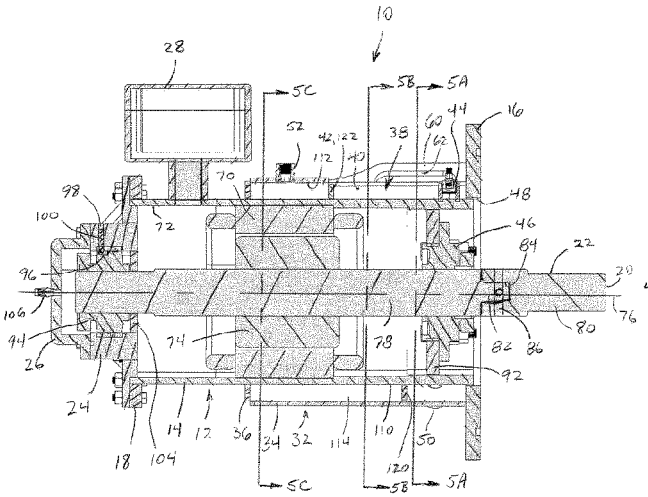

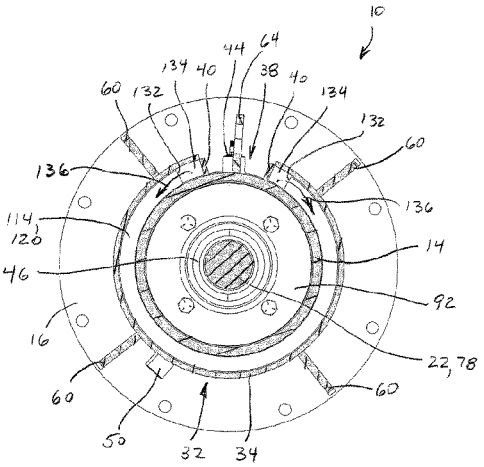

(56) **References Cited**

U.S. PATENT DOCUMENTS

4,253,483 A 3/1981 Cornelius
4,373,509 A 2/1983 Neitzel et al.
4,508,486 A 4/1985 Tinker
4,534,569 A 8/1985 Ishitani et al.
4,664,362 A 5/1987 Hennells
4,775,294 A 10/1988 LaPorte
4,844,479 A 7/1989 Ueda et al.
4,957,414 A 9/1990 Willingham
5,006,064 A 4/1991 Freund
5,083,904 A 1/1992 Masatsugu et al.
5,127,798 A 7/1992 Campolmi
5,171,128 A 12/1992 Williamson et al.
5,238,453 A 8/1993 Heil
5,246,343 A 9/1993 Windsor et al.
5,437,541 A 8/1995 Vainrub
5,567,380 A 10/1996 Hoover
5,588,803 A 12/1996 Vetter et al.
5,636,688 A 6/1997 Bassinger
5,648,694 A * 7/1997 Kobayashi ..... F04D 13/0686 310/87
5,673,681 A 10/1997 Neitzel et al.
D393,708 S 4/1998 Haeck
5,809,993 A 9/1998 Neitzel et al.
D405,170 S 2/1999 Haeck
5,879,815 A 3/1999 Schotz
5,894,737 A 4/1999 Haeck
5,915,960 A 6/1999 Check et al.
6,033,183 A 3/2000 Genster
6,050,258 A 4/2000 Neitzel et al.
6,065,936 A 5/2000 Shingai et al.
6,156,090 A 12/2000 Ishikawa et al.
6,251,153 B1 6/2001 Neitzel et al.
6,457,550 B1 10/2002 Barry et al.
6,505,502 B1 1/2003 Brownell et al.
6,644,337 B2 11/2003 Heil
6,726,454 B2 4/2004 Blass et al.
6,759,774 B1 * 7/2004 Griggs ..... H02K 5/124 310/87
6,797,041 B2 9/2004 Brownell et al.
6,994,743 B2 2/2006 Brownell et al.
7,018,289 B2 3/2006 Heil et al.
7,049,499 B1 5/2006 Mathson et al.
7,320,636 B2 1/2008 Seliger et al.
7,547,249 B2 6/2009 Seliger et al.
7,682,231 B2 3/2010 Enzenroth et al.
7,758,305 B2 7/2010 Kurszewski et al.
7,951,226 B2 5/2011 Stanton et al.
8,025,477 B2 9/2011 Ganesh et al.
8,100,407 B2 1/2012 Stanton et al.
8,221,082 B2 7/2012 Key
8,758,101 B2 6/2014 Khalitov et al.
8,932,013 B2 1/2015 Khalitov et al.
8,939,646 B2 1/2015 Forrest
9,004,868 B2 4/2015 Rhodes
9,109,605 B2 8/2015 Chou
9,182,131 B1 11/2015 Prasser et al.
9,505,092 B2 11/2016 Brownell et al.
9,523,371 B2 12/2016 Hollan et al.
10,054,130 B1 8/2018 Johansen
10,356,943 B2 7/2019 Johansen
10,605,258 B2 3/2020 Johansen
10,605,262 B2 3/2020 Johansen
10,935,040 B2 3/2021 Johansen
2002/0086574 A1 7/2002 Vinson et al.
2004/0254037 A1 12/2004 Williamson et al.
2005/0111972 A1 5/2005 Penlesky et al.
2005/0143001 A1 6/2005 Merlet et al.
2005/0159101 A1 7/2005 Hrdina et al.
2005/0204582 A1 9/2005 Rossi et al.
2007/0202795 A1 8/2007 Seliger et al.
2008/0030085 A1 * 2/2008 Gizaw ..... H02K 5/20 310/54
2011/0067836 A1 3/2011 Tang et al.
2011/0155345 A1 6/2011 Li
2011/0317362 A1 12/2011 Chen
2012/0156019 A1 6/2012 Gong et al.
2012/0322358 A1 12/2012 Wendorski et al.
2013/0169077 A1 * 7/2013 Takei ..... H02K 5/20 310/54
2013/0189131 A1 * 7/2013 Huang ..... 417/366
2013/0342046 A1 * 12/2013 Hyun ..... H02K 5/20 310/54
2014/0241868 A1 8/2014 Brownell et al.
2014/0241894 A1 8/2014 Brownell et al.
2015/0037154 A1 2/2015 Hall et al.
2015/0086349 A1 3/2015 Ganesh et al.
2015/0176603 A1 6/2015 Fetting et al.
2015/0267713 A1 9/2015 Robinson et al.
2015/0345512 A1 12/2015 Robinson et al.
2016/0061222 A1 3/2016 Robinson et al.
2016/0138606 A1 5/2016 Barry
2016/0161133 A1 6/2016 Oh
2016/0356278 A1 12/2016 Khalitov et al.
2016/0356287 A1 12/2016 Khalitov et al.
2018/0212494 A1 * 7/2018 Schochlow ..... H02K 9/19

* cited by examiner

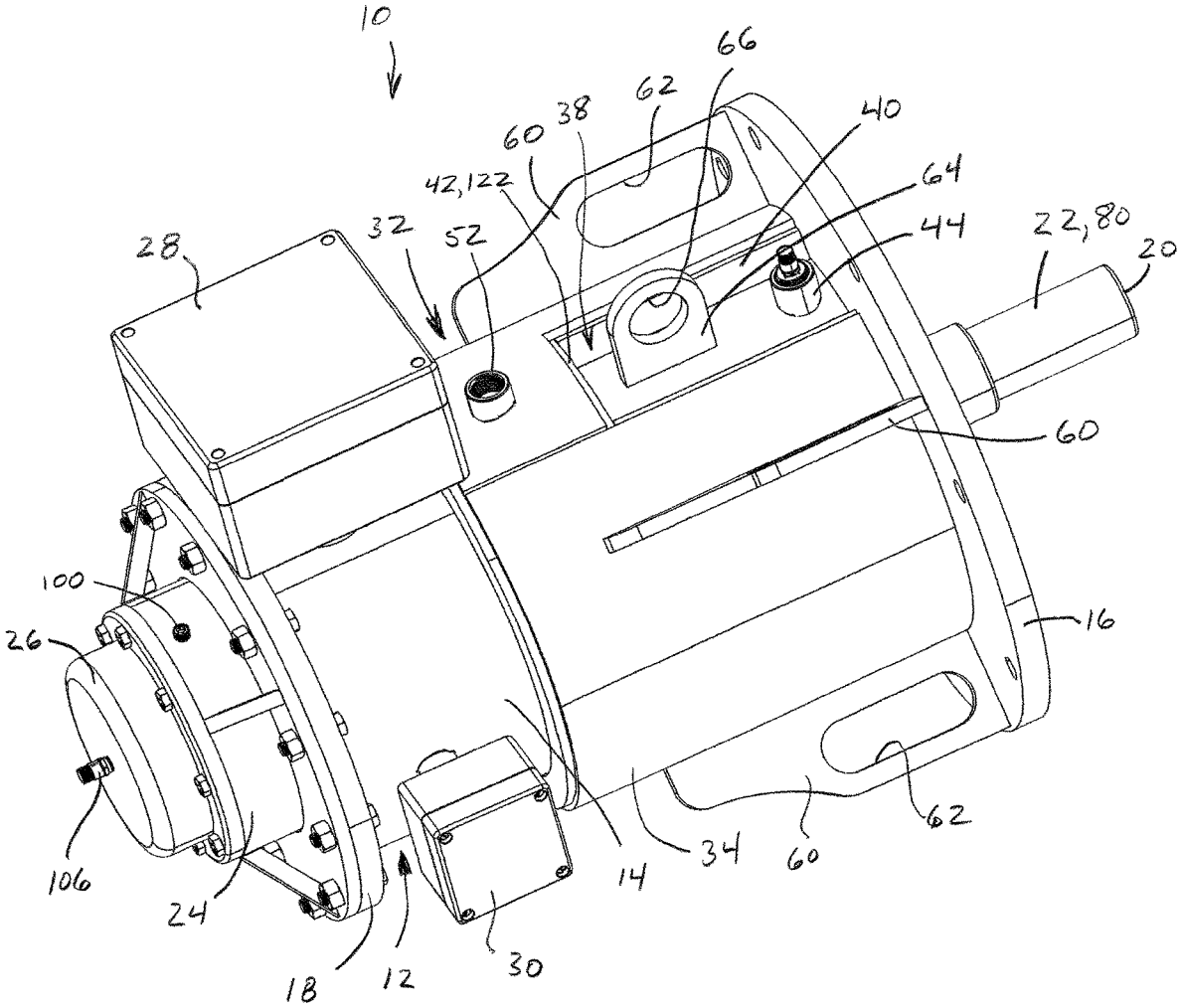
10
66
62
38
60
40
42,122
64
32
52
44
22,80
28
20
60
100
16
26
62
34
60
14
106
24
18
12
30

FIG. 1

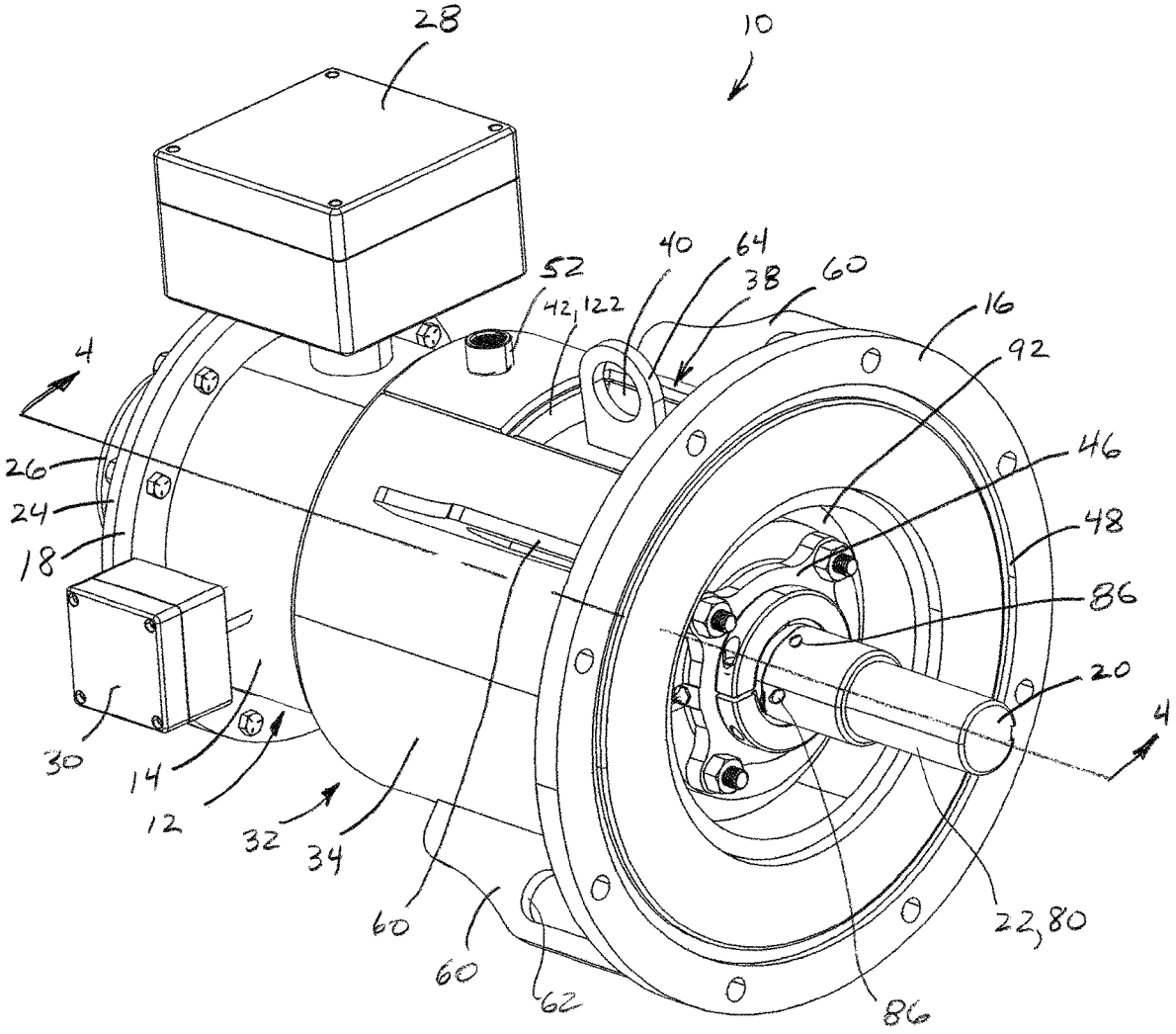
28
10
52
40
64
38
60
42,122
16
92
4
26
24
18
46
48
86
20
4
30
14
12
32
34
60
60
62
22,80
86

FIG. 2

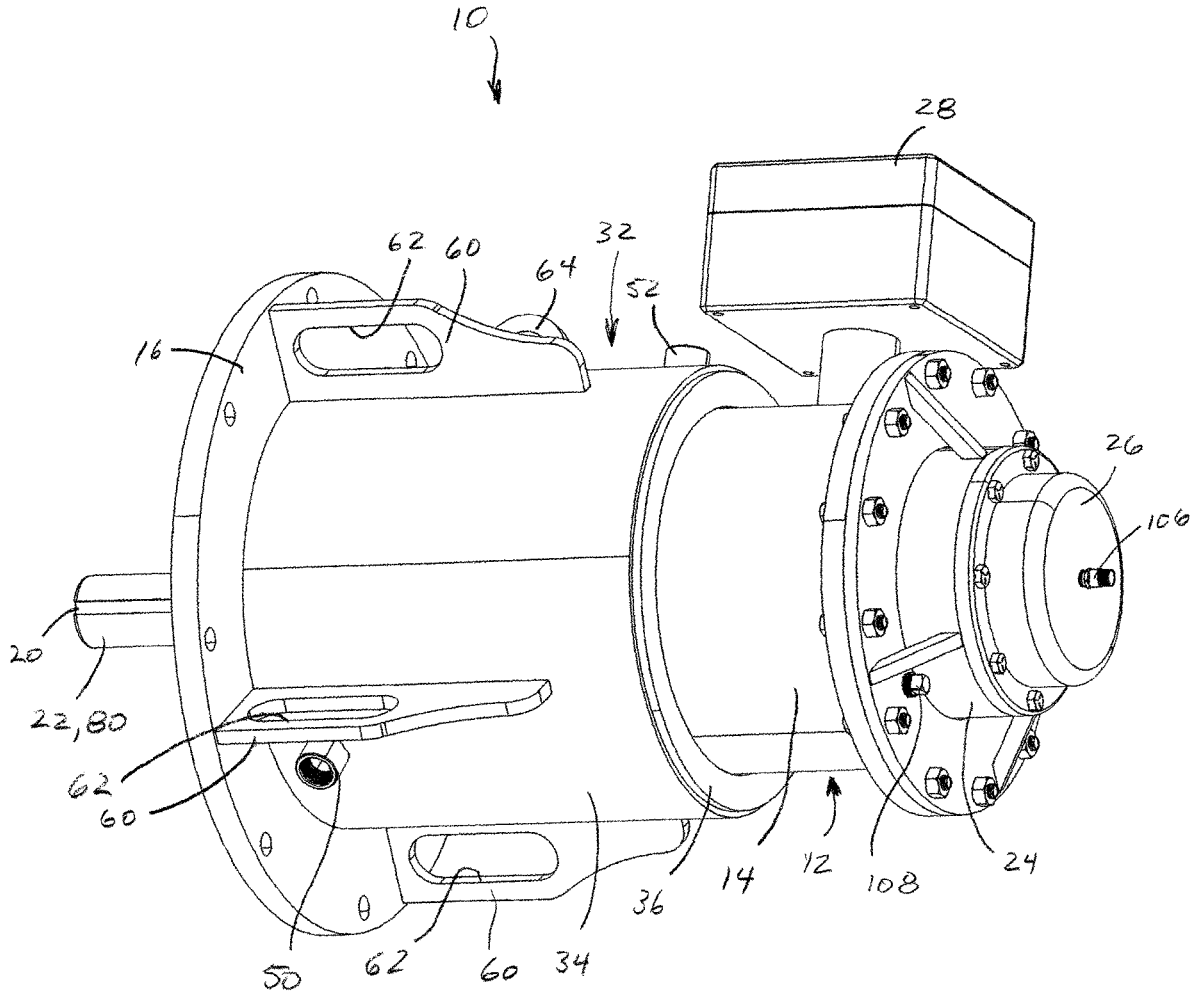
10
28
62
60
64
32
52
16
26
106
20
22,80
62
60
50
62
60
34
36
14
12
108
24

FIG. 3

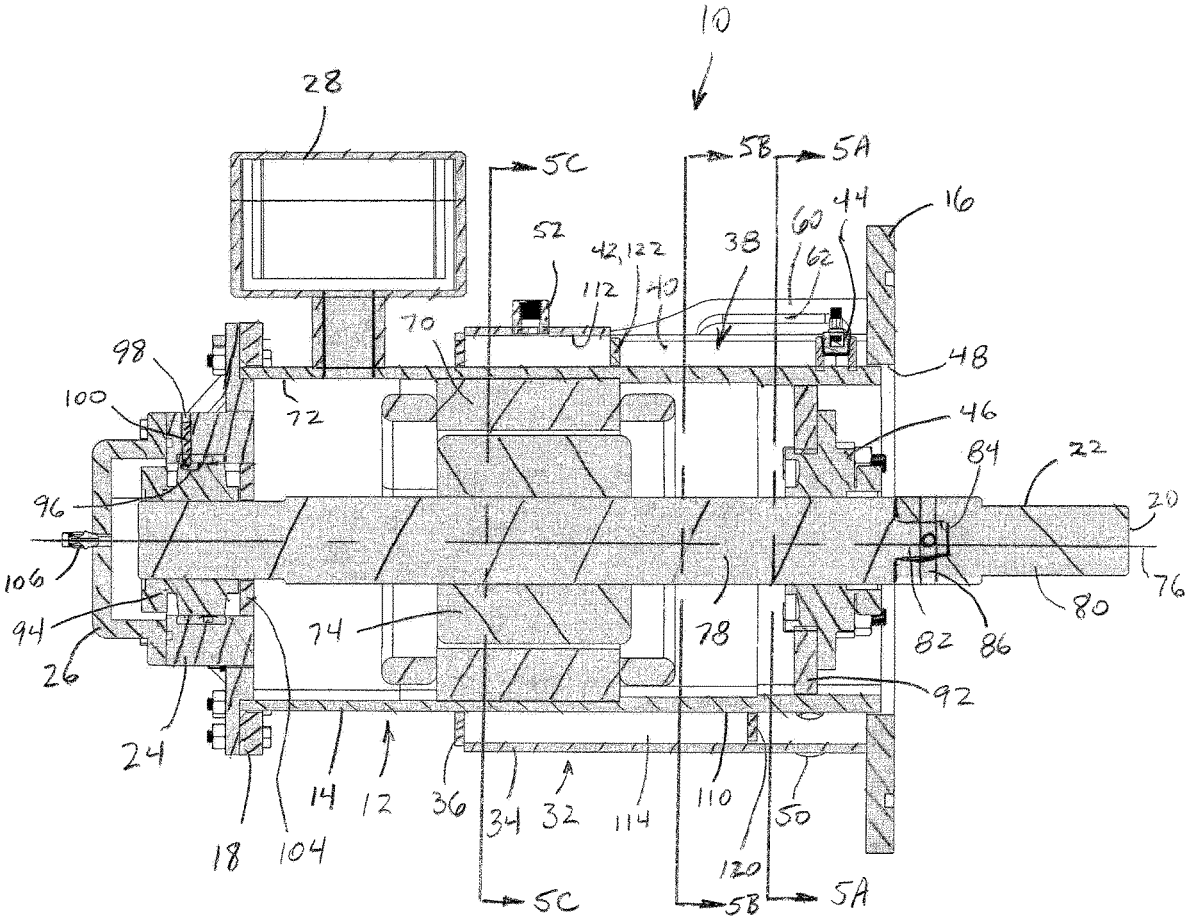
10
28
5C
5B
5A
52
42,122
38
60
44
16
62
112
40
70
98
48
100
72
46
84
22
96
20
106
76
94
74
78
80
82
86
26
92
24
14
12
36
34
32
114
110
50
18
104
120
5C
5B
5A

FIG 4

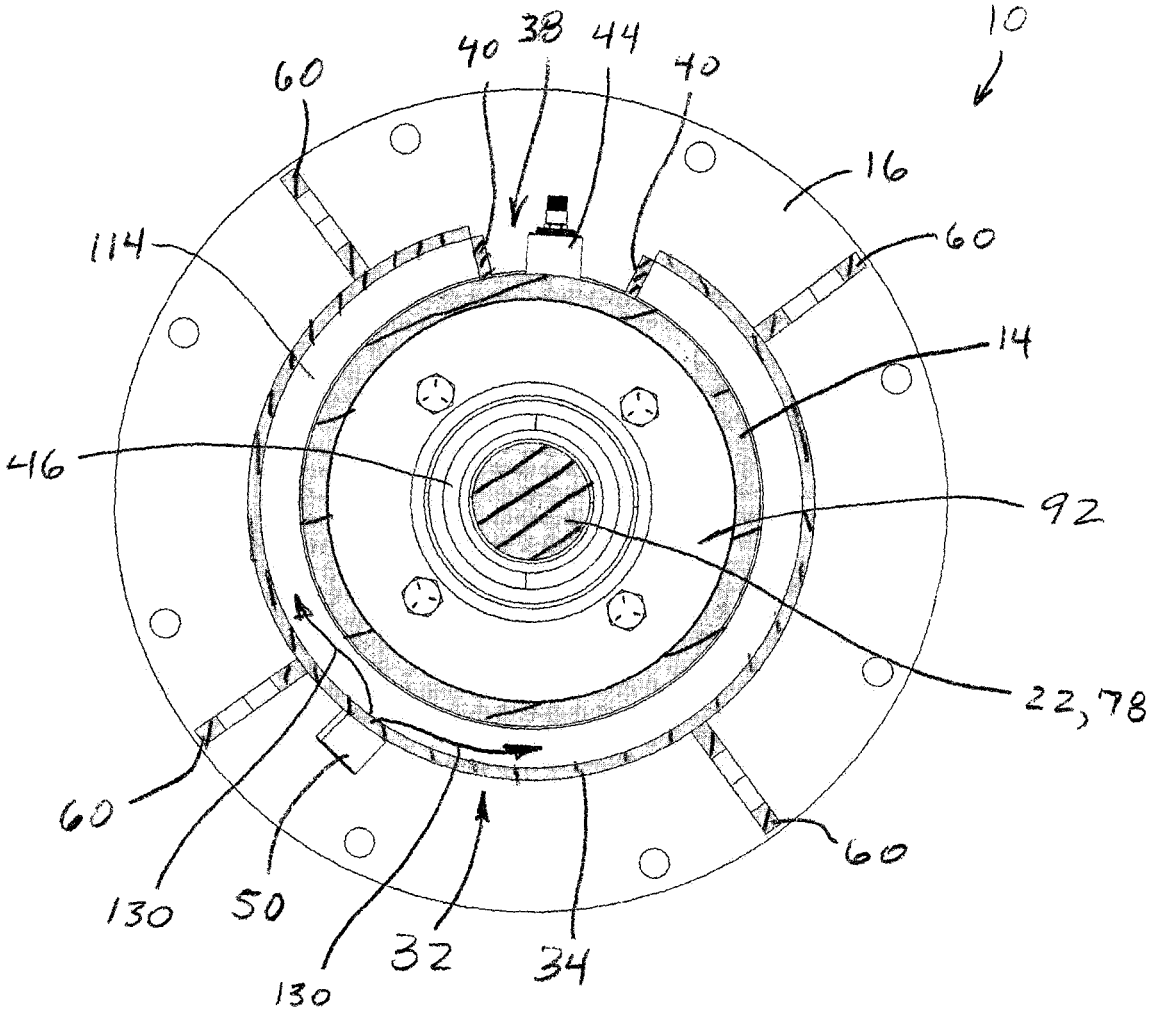


FIG. 5A

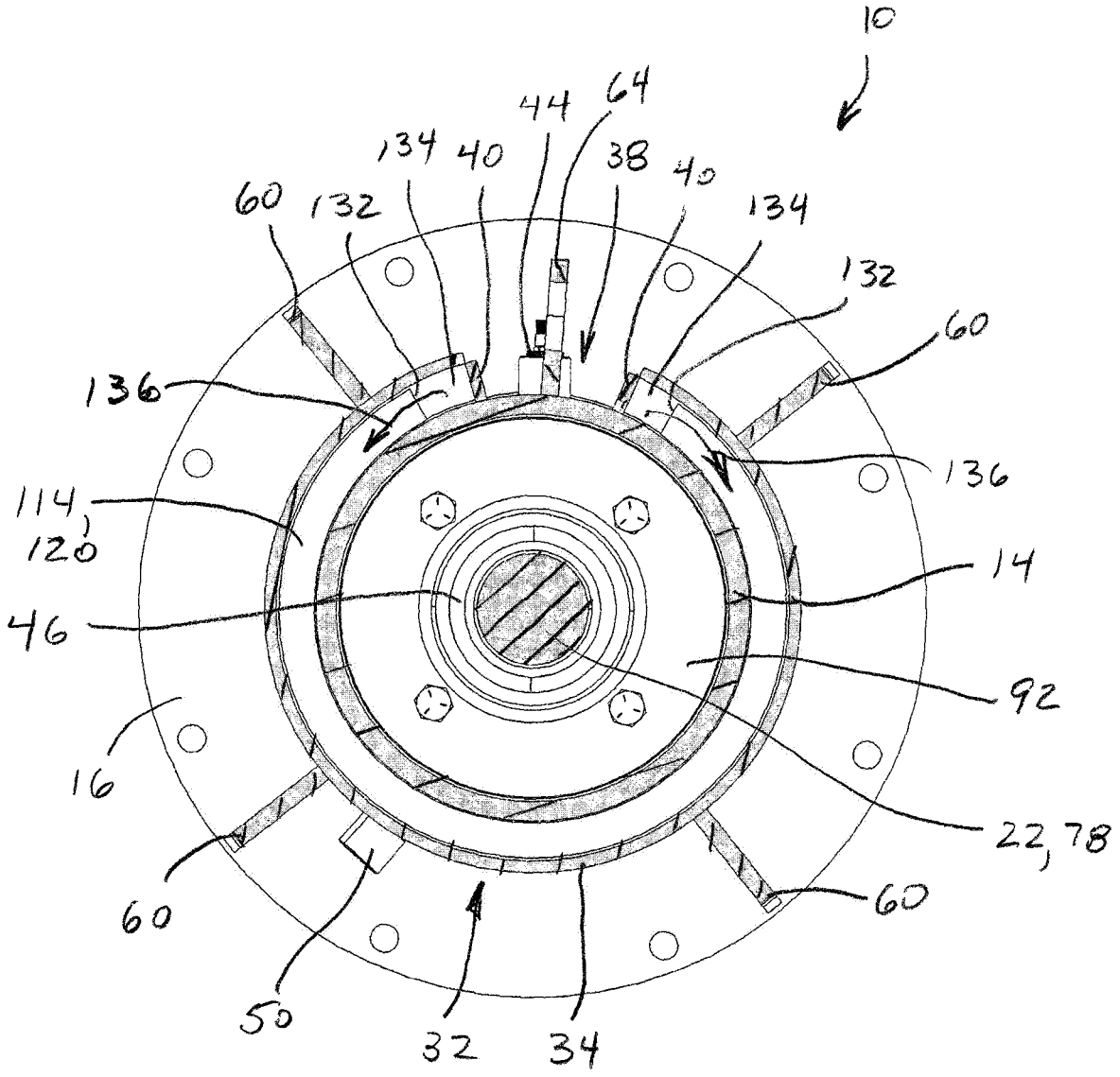
10
44
64
134
40
38
40
60
132
134
132
60
136
136
114,
120
14
46
92
16
22, 78
60
60
50
32
34

FIG. 5B

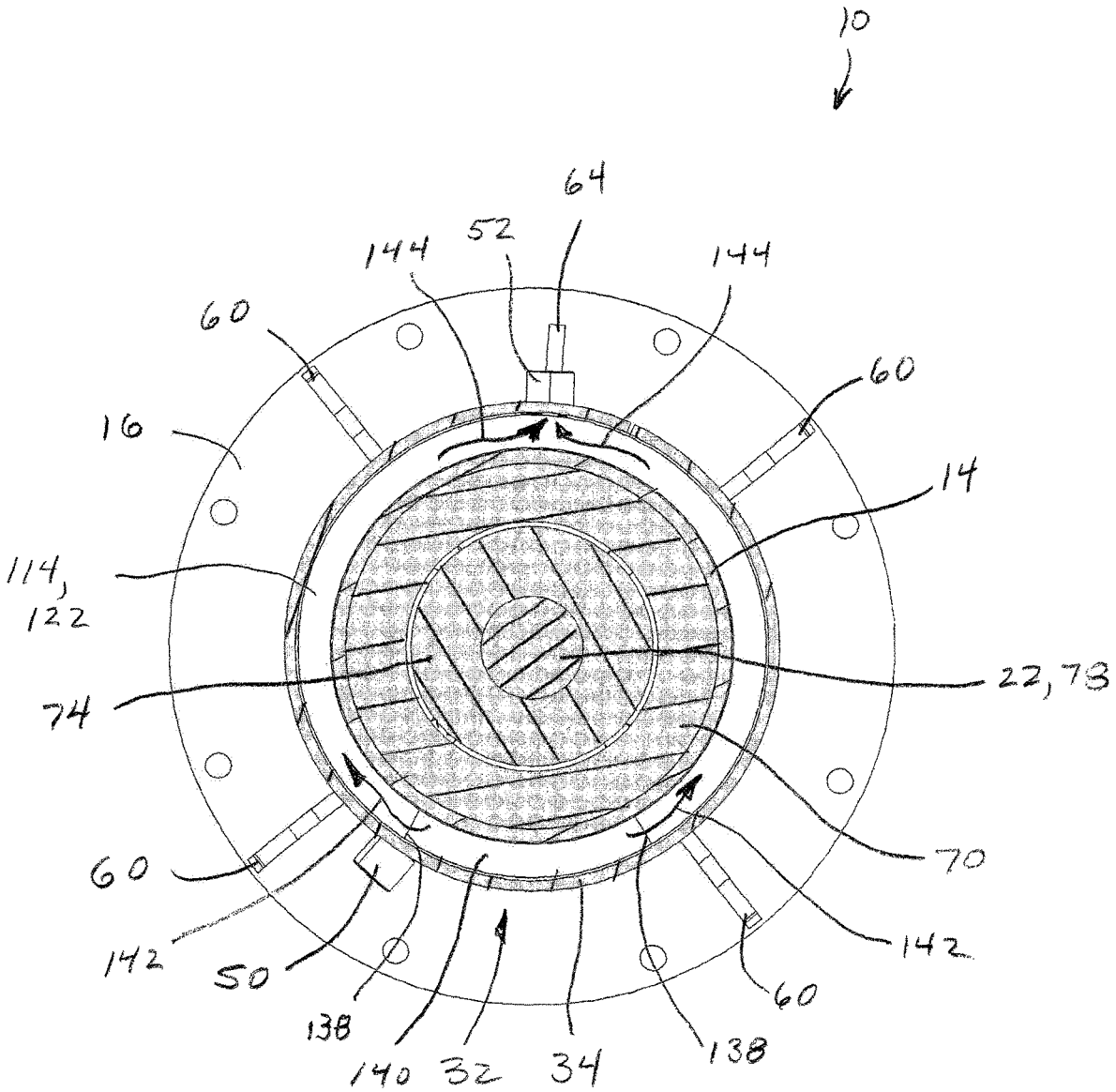
10
64
52
144
144
60
60
16
14
114,
122
22,78
74
70
60
142
142
50
60
138
140
32
34
138

FIG. 5C

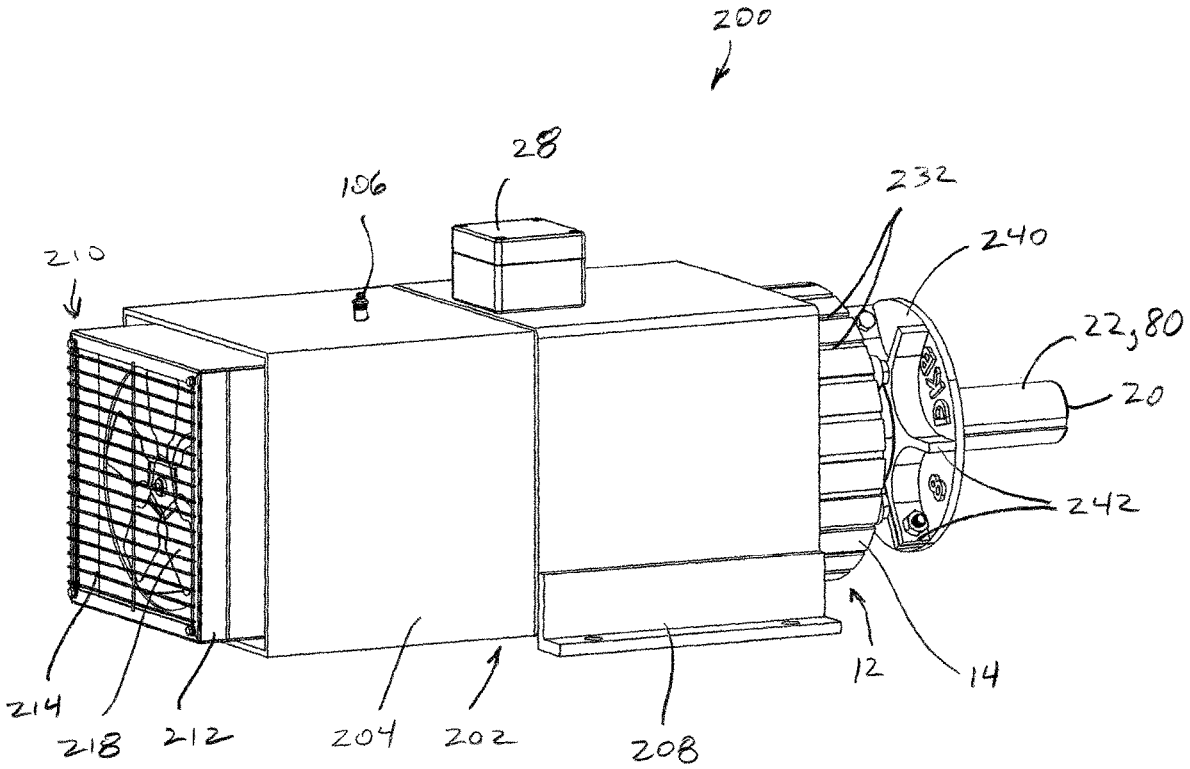


FIG. 6

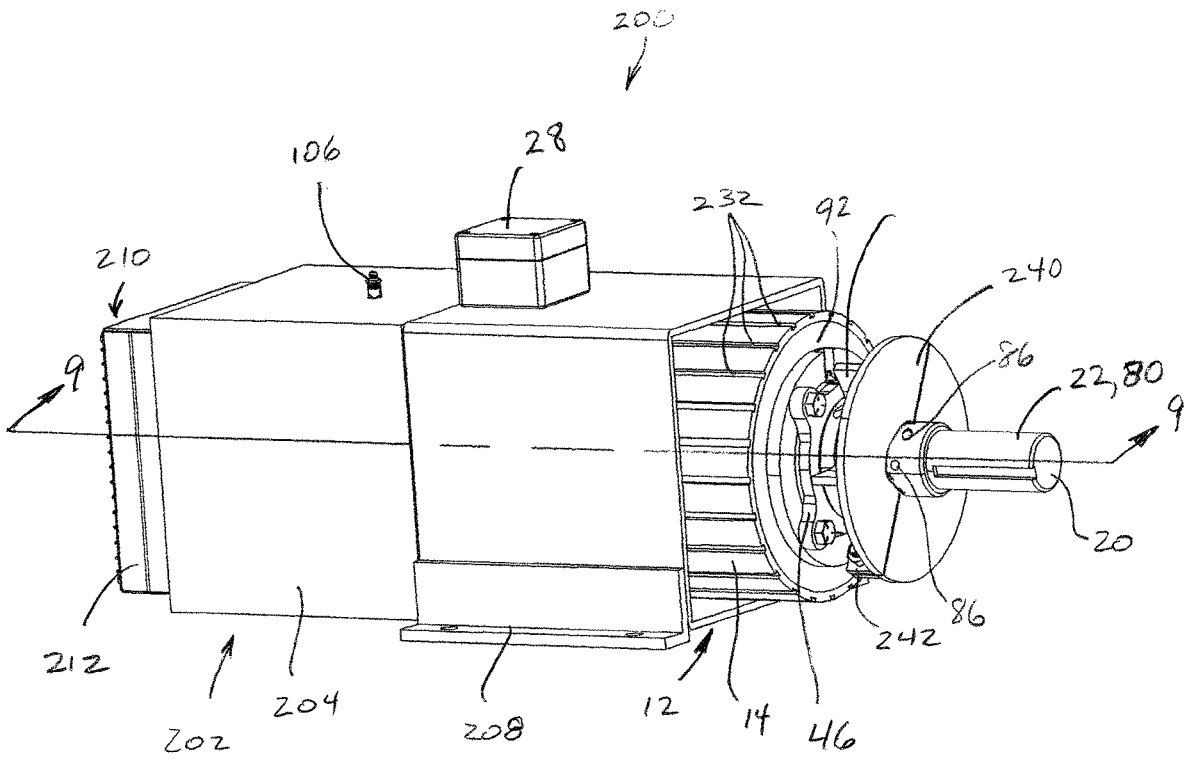
200
106
28
232
92
210
240
86
22,80
9
9
20
86
242
212
202
204
208
12
14
46

FIG. 7

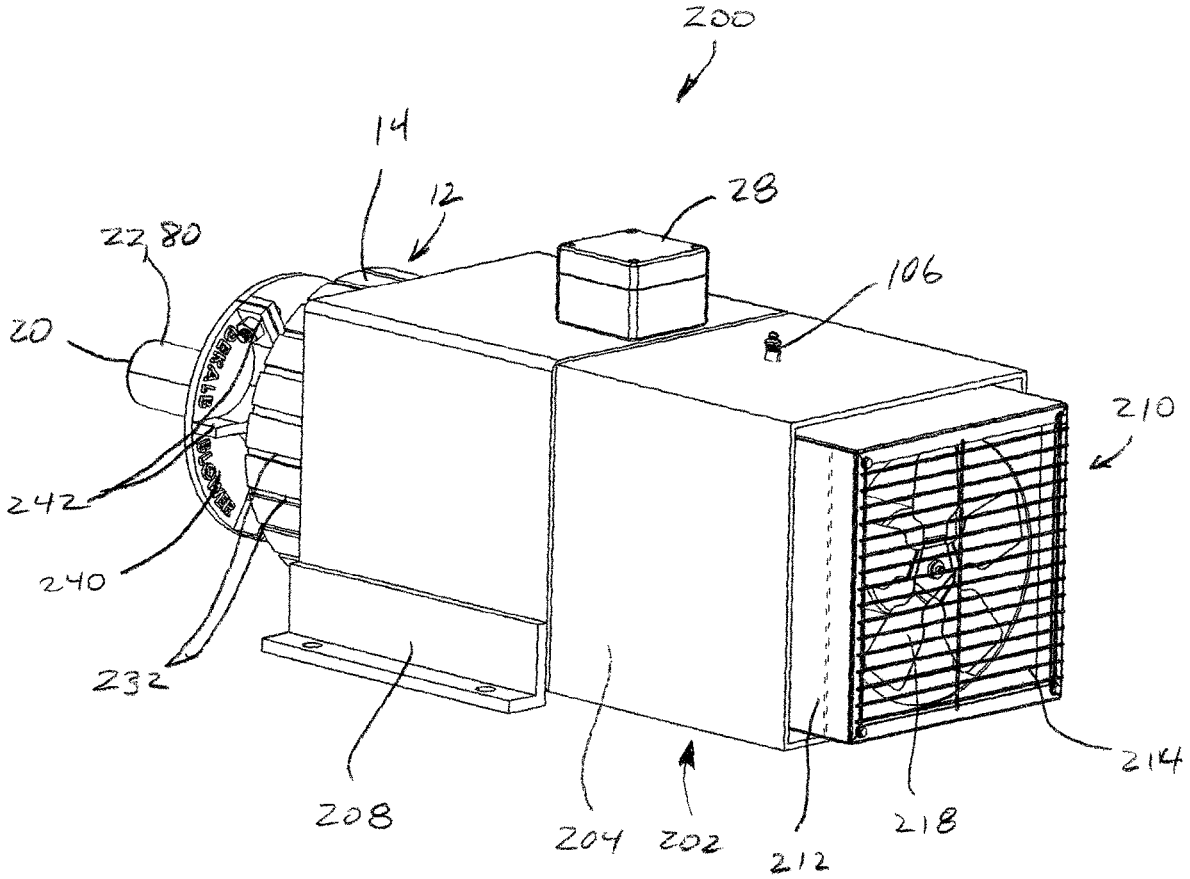


FIG. 8

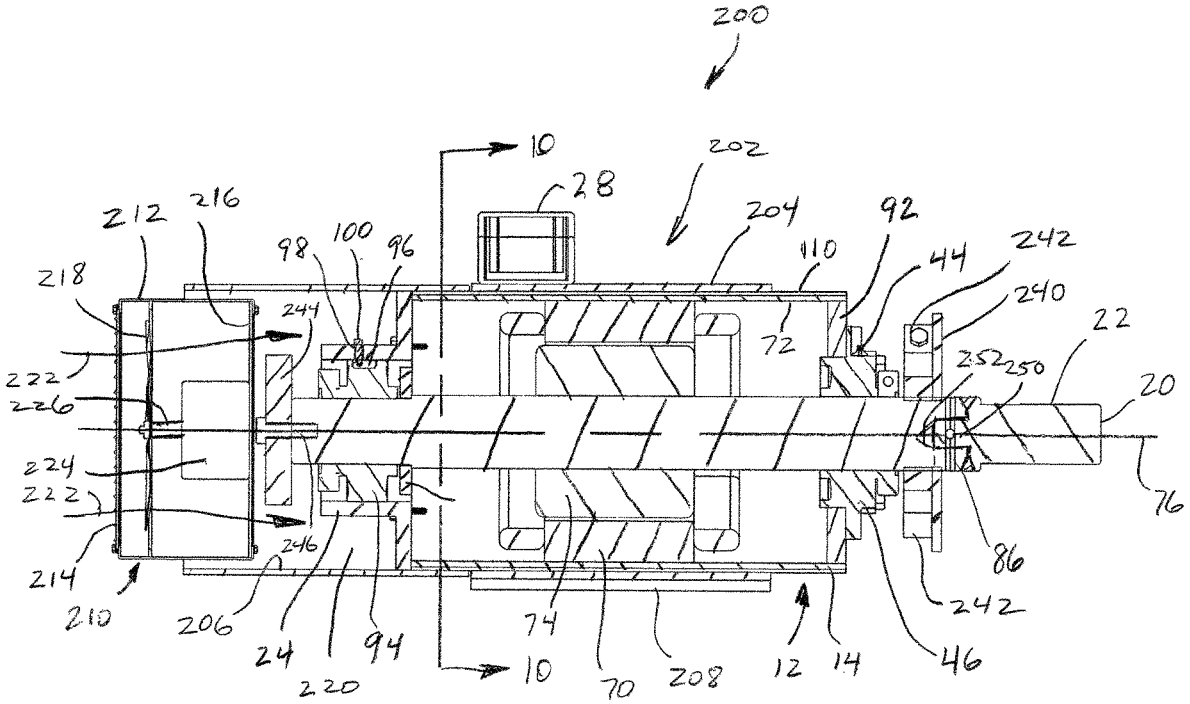
200
10
202
28
212
216
204
92
110
44
242
218
98
100
96
240
244
72
22
222
252
250
20
226
224
76
222
86
214
246
242
210
206
24
94
74
12
14
46
220
10
70
208

FIG. 9

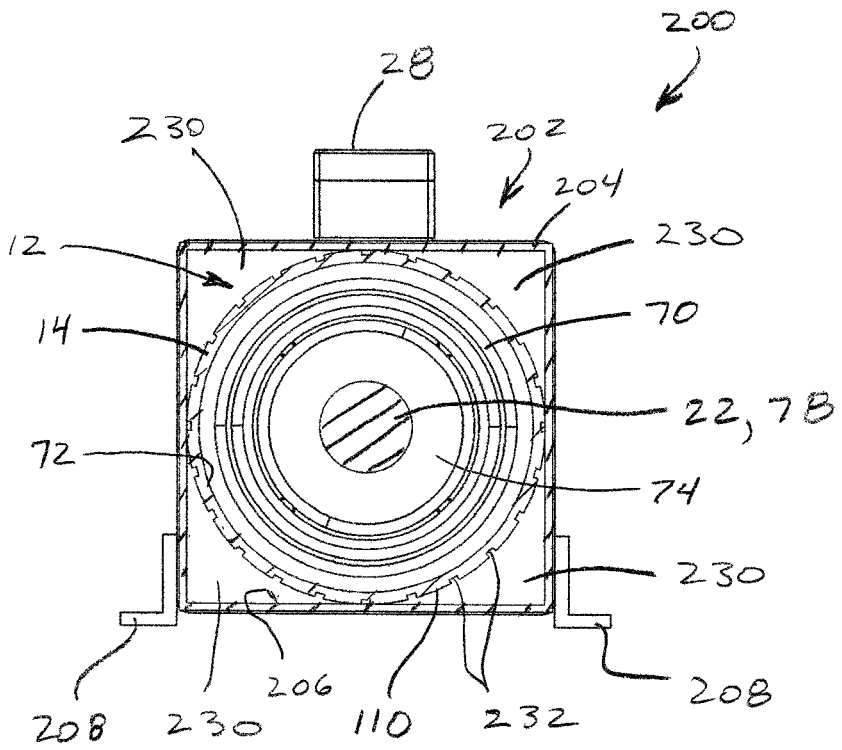
200
28
230
202
204
12
230
14
70
22, 78
72
74
230
208
230
206
110
232
208

FIG. 10

# ELECTRIC MOTOR WITH FLUID COOLING

## CROSS-REFERENCE TO RELATED APPLICATION

This application claims priority to U.S. Provisional Patent Application Ser. No. 62/750,053, filed on Oct. 24, 2018, which application is expressly incorporated by reference herein.

## TECHNICAL FIELD

The present disclosure relates generally to industrial electric motors and, more particularly, to industrial electric motors for high temperature environments that are cooled by fluid flow over an electric motor housing.

## BACKGROUND

Electric motors are used in industrial applications to create airflow for processes such as combustion, ventilation, aeration, particulate transport, exhaust, cooling, air-cleaning, drying and air recirculation. Airflow is created by rotating an impeller having a plurality of blades to create the desired circulation of air within the operating environment. Typically, an industrial electric motor includes an external motor housing, internal components within the housing such as a stator and a rotor, and a motor shaft extending out of the motor housing. The impeller is mounted on or otherwise operatively connected to the motor shaft so that rotation of the motor shaft causes rotation of the impeller to generate the airflow. In many high temperature environment applications, the motor housing is mounted to an exterior wall or roof of the high temperature environment with the motor shaft extending through the wall or roof and the impeller being disposed within the high temperature environment.

The components of the industrial electric motors are subjected to loads and stresses during the operation in high temperature environments. Thermal stresses along with the normal loads and stresses of operating electric motors can cause damage to the components that will reduce the efficiency of the electric motor or cause complete failure. The high temperature environments can also subject the components to contaminants that may corrode the components or otherwise damage the components so that the electric motors do not operate at their optimal efficiencies. Ultimately, the additional thermal stresses and other adverse conditions can result in earlier fatigue failure of the industrial electric motor and more frequent need for replacement of components in high temperature environments as the components endure numerous thermal cycles from processes, and in corrosive environments due to exposure to harmful chemicals, than when operating in environments that do not cause the same level of thermal stresses or corrosive exposure on the components. Moreover, when operating on a variable drive frequency (VFD) controller, an electric motor may have an excessive turndown ratio that can cause the internal components of the motor to run much hotter at lower frequency, thus causing an overheating condition where the motor is not be able to dissipate the additional heat through the motor housing through traditional convective or conductive cooling methods.

## SUMMARY OF THE DISCLOSURE

In one aspect of the present disclosure, an electric motor is disclosed. The electric motor may include a housing wall



having a cylindrical shape, a housing wall inner surface and a housing wall outer surface, a stator mounted to the housing wall inner surface, a motor shaft mounted for rotation within the housing wall, and a cooling jacket wall surrounding and concentric with the housing wall and having a jacket wall inner surface and a jacket wall outer surface. The housing wall outer surface and the jacket wall inner surface may define a cooling jacket cavity, the cooling jacket wall may have a fluid inlet and a fluid outlet, and cooling fluid may flow into the cooling jacket cavity through the fluid inlet, flow through the cooling jacket cavity over the housing wall outer surface and flow out of the cooling jacket cavity through the fluid outlet.

In another aspect of the present disclosure, an electric motor is disclosed. The electric motor may include a housing wall having a cylindrical shape, a housing wall inner surface and a housing wall outer surface, a stator mounted to the housing wall inner surface, a motor shaft mounted for rotation within the housing wall, a cooling jacket wall surrounding and concentric with the housing wall and having a jacket wall inner surface and a jacket wall outer surface, a first jacket end wall connected to the jacket wall proximate a first jacket wall end and to the housing wall, and a second jacket end wall connected to the jacket wall proximate a second jacket wall end and to the housing wall. The housing wall outer surface, the jacket wall inner surface, the first jacket end wall and a second jacket end wall may define a cooling jacket cavity, and the cooling jacket wall has a fluid inlet port proximate the first jacket end wall and a fluid outlet port proximate the second jacket end wall, and cooling fluid may flow into the cooling jacket cavity through the fluid inlet port, flow through the cooling jacket cavity over the housing wall outer surface and flow out of the cooling jacket cavity through the fluid outlet port.

In a further aspect of the present disclosure, an electric motor is disclosed. The electric motor may include a housing wall having a cylindrical shape, a housing wall inner surface and a housing wall outer surface, a stator mounted to the housing wall inner surface, a motor shaft mounted for rotation within the housing wall, a cooling jacket wall surrounding and concentric with the housing wall and having a jacket wall inner surface and a jacket wall outer surface, wherein the housing wall outer surface and the jacket wall inner surface define a cooling jacket cavity, and a cooling fan mounted at an open end of the jacket wall and upstream from the housing wall to discharge air into the cooling jacket cavity. The air discharged from the cooling fan may flow longitudinally through the cooling jacket cavity and along the housing wall outer surface.

Additional aspects are defined by the claims of this patent.

## BRIEF DESCRIPTION OF THE DRAWINGS

FIG. **1** is an isometric view of an electric motor including an embodiment of fluid cooling in accordance with the present disclosure;

FIG. **2** is a second isometric view of the electric motor of FIG. **1**;

FIG. **3** is a third isometric view of the electric motor of FIG. **1**;

FIG. **4** is a cross-sectional view of the electric motor of FIG. **1** taken through line **4**-**4** of FIG. **2**;

FIG. **5**A is a cross-sectional view of the electric motor of FIG. **1** taken through line **5**A-**5**A of FIG. **4**;

FIG. **5**B is a cross-sectional view of the electric motor of FIG. **1** taken through line **5**B-**5**B of FIG. **4**;

FIG. **5**C is a cross-sectional view of the electric motor of FIG. **1** taken through line **5**C-**5**C of FIG. **4**;

FIG. **6** is an isometric view of an electric motor including a second embodiment of fluid cooling in accordance with the present disclosure;

FIG. **7** is a second isometric view of the electric motor of FIG. **6**;

FIG. **8** is a third isometric view of the electric motor of FIG. **6**;

FIG. **9** is a cross-sectional view of the electric motor of FIG. **6** taken through line **9**-**9** of FIG. **7**; and

FIG. **10** is a cross-sectional view of the electric motor of FIG. **6** taken through line **10**-**10** of FIG. **9**.

## DETAILED DESCRIPTION

The present disclosure is directed to electric motors having housings and other features for causing fluid flow around the electric components to remove heat during operation. The electric motors in accordance with the present disclosure have particular application in high temperature environments where the electric motors drive impellers to create airflow within the high temperature environments. The housing of the electric motor may be mounted to an exterior surface such as a wall or roof of the high temperature environment with a shaft extending into the high temperature and/or corrosive environment where the impeller will be located. Heat may still be communicated from the high temperature to the electric motor housing where the cooling jackets and other components in accordance with the present disclosure remove heat to protect the internal components of the electric motor.

FIGS. **1**-**3** illustrate isometric views of a first embodiment of an electric motor **10** with fluid cooling in accordance with the present disclosure. The electric motor **10** may be a standard 3 phase A/C induction motor and may include a motor housing **12** enclosing the electrical components discussed later in the present application. The motor housing **12** includes a housing wall **14** with a first or mounting flange **16** at a first end and a second or closed end flange **18** at an opposite end. The flanges **16**, **18** may be integrally formed at the corresponding ends of the housing wall **14**, or welded or otherwise connected to the ends to from substantially air- and water-tight connections so gases and fluids cannot leak into or out of the motor housing **12** at the interfaces between the housing wall **14** and the flanges **16**, **18**. The mounting flange **16** is annular and configured for connection to a wall or roof (not shown) of a high temperature environment with a shaft end **20** of a motor shaft **22** extending through the mounting flange **16** and into the high temperature environment for attachment of an impeller (not shown) that will be driven by the electric motor **10** to create airflow within the high temperature environment. The second flange **18** is configured for attachment of an end bell **24** and an end cap **26** to close off the motor housing as discussed more fully below. The motor housing **12** may further include a wire terminal box **28** for the electrical connections between the motor components and a power source and controls (not shown) for the electric motor **10**, and a thermostat box **30** for a thermostat (not shown) that may measure the internal temperature of the motor housing **12** to provide feedback for detecting overheating conditions that may happen in the case of power outages for the cooling liquid supply, water flow shortages or other cooling medium disruptions.

Cooling of the motor housing **12** is provided by a cooling jacket **32** that surrounds the housing wall **14** to facilitate fluid flow over the housing wall **14** to remove heat from the motor housing **12**. The interior of the cooling jacket **32** includes a cylindrical jacket wall **34** surrounding and concentrically aligned with the housing wall **14**. The jacket wall **34** may be integrally formed with, or welded or otherwise connected to the mounting flange **16** to form an air- and water-tight seal there between. At an end opposite the mounting flange **16**, an annular jacket end wall **36** extends from the end of the jacket wall **34** to the housing wall **14** and is connected thereto to close off the end of the cooling jacket **32**. In the illustrated embodiment, the jacket wall **34** includes a cutout portion **38** extending from the mounting flange **16** and providing access to a corresponding portion of the housing wall **14**. The cooling jacket **32** is closed in the area of the cutout portion **38** by a pair of cutout side walls **40** and a cutout end wall **42**. The cutout portion **38** may provide access for installation of a grease fitting **44** proximate the mounting flange **16** to provide lubrication to a fixed shaft bearing **46** (FIG. **2**) without the necessity of opening the motor housing **12** or detaching the electric motor **10** to gain access to the fixed shaft bearing **46** through a central circular opening **48** of the mounting flange **16**.

Access for the cooling fluid to the cooling jacket **32** is provided by a fluid inlet port **50** (FIG. **3**) and a fluid outlet port **52** (FIGS. **1** and **2**) in the jacket wall **34**. The fluid inlet port **50** is located proximate the mounting flange **16** in an area that is most proximate to the heat from the high temperature environment. The fluid inlet port **50** is also proximate a lowest portion of the motor housing **12** when the electric motor **10** is mounted with the motor shaft **22** horizontal and the wire terminal box **28** on top of the motor housing **12**. Being positioned proximate the mounting flange **16**, the fluid inlet port **50** is also proximate the lowest point of the motor housing **12** when the electric motor **10** is oriented with the end **20** of the motor shaft **22** extending vertically downward, such as when the electric motor **10** is installed on a roof of a high temperature environment.

The fluid outlet port **52** is located proximate the jacket end wall **36** and on the same side of the motor housing **12** as the wire terminal box **28**. Positioned as shown, the fluid outlet port **52** is disposed proximate the top of the motor housing **12** and the cooling jacket **32**, and above the fluid inlet port **50** whether the electric motor **10** is oriented horizontally with the wire terminal box on top or vertically with the motor shaft **22** extending downward. With this arrangement, air pockets within the cooling jacket **32** that can reduce the thermal efficiency of the cooling jacket **32** may be virtually eliminated as discussed further below.

To facilitate orienting the electric motor **10** horizontally or vertically as discussed above for installation, a plurality of lifting gussets **60** are circumferentially spaced about the cooling jacket **32** proximate the mounting flange **16**. The lifting gussets **60** may be welded to the outer surface of the jacket wall **34** and to the mounting flange **16**, thereby providing structural reinforcement for the mounting flange **16** in addition to being points of attachment for lifting elements. The lifting gussets **60** may each include a connection aperture **62** for attachment of hooks, chain, cables, ropes or other lifting elements. An additional lifting gusset **64** with a connection aperture **66** may be welded to the housing wall **14** within the cutout portion **38** of the jacket wall **34**.

The interior of the electric motor **10** is illustrated in detail in the cross-sectional view of FIG. **4**. The electrical components of the electric motor **10** are installed within the housing wall **14**. A stator **70** is mounted to a housing wall inner surface **72** and is held stationary relative to the housing wall **14**. A rotor **74** is mounted on and rotates with the motor

shaft **22** about a shaft longitudinal axis **76**. The operation of the stator **70** and the rotor **74** to drive the motor shaft **22** and attached impeller is conventional for a 3 phase A/C induction motor as is known to those skilled in the art.

The motor shaft **22** has different operating requirements within the motor housing **12** and within the high temperature environment. Within the motor housing **12**, the motor shaft **21** must be electrically conductive so as to not interfere with the magnetic field and current flow of the stator **70** and the rotor **74**. Outside the motor housing **12** and proximate to and within the high temperature environment, the motor shaft **22** must be resistant to high temperatures. To accommodate both sets of operating conditions, the motor shaft **22** may be provided with a two-piece construction. A motor housing shaft portion **78** within the motor housing **12** may be fabricated from a conductive material such as 1018 or 1045 carbon steel or similar conductive material. An exterior shaft portion **80** external to the motor housing **12** may be fabricated from a non-conductive, high temperature resistant material such as 300 series stainless steel alloys (approximate melting point=2750° F.), nickel steel alloys (approximate melting point=2647° F.), chromium steel (approximate melting point=3380° F.) or similar materials having melting points of approximately 2200° F. or higher. While the centrifugal forces applied from the impeller rotating on the motor shaft **22**, the material of the exterior shaft portion **80** may require a very high tensile strength and high resistance to creep at the elevated temperatures where standard carbon or mild steel elements would not be up to the challenge. Resistance to shaft deflection is taken into consideration in material selection to ensure a long service life for the motor shaft **22**. The shaft portions **78**, **80** may be fabricated separately and assembled prior to installation. In one embodiment, the motor housing shaft portion **78** may have a splined male end **82** that is inserted into a splined bore **84** of the exterior shaft portion **80**, with the splines of the male end **82** and the bore **84** meshing and engaging so that the shaft portions **78**, **80** rotate together. Due to the operation in extreme heat conditions, one or both shaft portions **78**, **80** may include heat dissipation bores **86** drilled through the shaft portions **78**, **80** transverse to the longitudinal axis **76**. The heat dissipation bores **86** increase the exposed surface area of the motor shaft **22** that allow heat to be communicated to the atmosphere surround the motor shaft **22**.

The motor shaft **22** is mounted to the motor housing **12** for rotation using appropriate rotational bearings. The fixed shaft bearing **46** discussed above is disposed proximate the mounting flange **16**, and is accessible through the circular opening **48** of the mounting flange **16** when the electric motor **10** is not installed. In one embodiment, the fixed shaft bearing **46** may be a pillow block bearing. Bearings such as pillow block bearings may allow rotation of the motor shaft **22** while forming a seal to prevent unwanted contaminants from entering the motor housing **12** from the high temperature environment. An annular bearing mounting flange **92** may be connected to and extend inward from the housing wall inner surface **72**. The fixed shaft bearing **46** may have an outer housing that is press fit into, welded to or otherwise connected to the bearing mounting flange **92** to center the fixed shaft bearing **46** within the motor housing **12**.

At the opposite end of the motor housing **12** proximate the closed end flange **18**, a floating shaft bearing **94** may be mounted within the end bell **24** of the motor housing **12**. The floating shaft bearing **94** may be any appropriate ball bearing for the motor shaft **22**. Even with the cooling jacket **32** removing heat from the motor housing **12**, the motor shaft **22** may still deflect due to natural flexing motion caused by rotational and centrifugal forces applied due to the inertia of the impeller. The motor shaft **22** may also experience some thermal expansion due to heat transferred from the high temperature environment, as well as heat generated from rotational loading and power transmission friction from the electric current flowing through the rotor **74** mounted on the motor shaft **22**. To allow for thermal expansion of the motor shaft **22**, the floating shaft bearing **94** is engaged by the end bell **24** in a manner that allows axial movement of the floating shaft bearing **94** as the motor shaft **22** expands and contracts. In the illustrated embodiment, for example, the floating shaft bearing **94** may have a axial expansion slot **96** defined in an outer surface, such as an outer surface of an outer race. The end bell **24** may have a corresponding threaded expansion set screw bore **98** drilled through from an outer surface to an inner surface. The expansion set screw bore **98** receives an expansion set screw **100** therein. The expansion slot **96** may have a circumferential width wide enough to receive an end of the expansion set screw **100**. During installation, the expansion slot **96** may be aligned with the expansion set screw bore **98**, and the expansion set screw **100** may be screwed into the expansion set screw bore **98** with the tip being received within the expansion slot **96**, but not tightened to the point of preventing axial movement of the floating shaft bearing **94**. The expansion slot **96** may have an axial length and an axial position that allows the floating shaft bearing **94** to move axially with the expansion and contraction of the motor shaft **22** without the expansion set screw **100** engaging the longitudinal ends of the expansion slot **96** and restricting movement. At the same time, the expansion set screw **100** will engage lateral sides of the expansion slot **96** to substantially rotation of the floating shaft bearing **94** about the longitudinal axis **76**. Alternative mechanisms for allowing axial movement of the floating shaft bearing **94** while preventing rotation will be apparent to those skilled in the art and are contemplated by the inventor. This arrangement can prolong the life of the floating shaft bearing **94** as the motor shaft grows linearly from deflection rather than binding the bearings in the races of the ball bearings and causing thrust loads, additional friction, misalignment and overheating of the floating shaft bearing **94** in a preloaded condition as the motor shaft **22** expands.

Grease or other coating materials, if introduced within the motor housing **12**, may adhere to or coat the stator **70** and/or the rotor **74**. By coating the electric components **70**, **74**, the grease or coating material may act as a thermal insulator that seals in heat and create a risk of causing the electric motor **10** to overheat. Consequently, because the floating shaft bearing **94** has potential to leak grease or coating material, a radial restriction bushing and/or lip seal **104** may be installed between the floating shaft bearing **94** and the components **70**, **74**. In the illustrated embodiment, the lip seal **104** is press fit into the base of the end bell **24** in which the floating shaft bearing **94** is installed. However, the lip seal **104** may be installed at any other location where it can prevent fluids from the floating shaft bearing **94** from leaking into the motor housing **12**.

Installation of the end cap **26** substantially seals the interior of the motor housing **12** from the ambient atmosphere surrounding the electric motor **10**. The end cap **26** may include a grease fitting **106** similar to the grease fitting **44** proximate the mounting flange **16** for providing lubricant to the floating shaft bearing **94** without removing the end cap **26**. The grease fittings **44**, **106** contain dust caps that prevent gas from entering or escaping the motor housing **12**. The dust caps are in place during normal operation. At service or

lubrication, the dust caps are unscrewed and removed, making a standard grease gun accessible to add the appropriate lubricant. After servicing, the dust caps are reinstalled to reseal the motor housing **12**. In addition to welds between mating parts, the motor housing **12** will include other sealing mechanisms as necessary at locations to seal the motor housing **12** from the ambient atmosphere. However, in some implementations, contaminants from the high temperature environment may flow past the fixed shaft bearing **46** and into the interior of the motor housing **12**. The contaminants can include gases such as ammonia that are corrosive to the materials of the stator **70** and the rotor **74** and do damage that may impact the performance of the electric motor **10**. In such embodiments, the end bell **24** may include an inert gas purge port **108** (FIG. **3**) that is in fluid communication with the interior of the motor housing **12**. The inert gas purge port **108** may be connected to a source (not shown) of pressurized inert gas that will not react with and corrode the stator **70** and the rotor **74**. The inert gas can be pumped into the interior of the motor housing **12** to raise the internal pressure to a point that is greater than the pressure at the outer side of the fixed shaft bearing **46**. The internal pressure created by the inert gas will keep the unwanted contaminants from infiltrating the interior of the motor housing **12**. When inert gas purging is not needed, the inter gas purge port **108** may be plugged to hermetically seal the interior of the motor housing **12** from the ambient atmosphere.

The interior of the cooling jacket **32** is also shown in FIG. **4**. A housing wall outer surface **110**, a jacket wall inner surface **112**, the mounting flange **16**, the jacket end wall **36** and the cutout end wall **42** define a cooling jacket cavity **114** through which the cooling fluid will flow from the fluid inlet port **50** to the fluid outlet port **52**. As shown, the cooling jacket cavity **114** extends from the mounting flange **16** to a point where substantially all of the stator **70** and the rotor **74** are encircled by the cooling jacket **32**. In alternative embodiments, the cooling jacket **32** may extend further or shorter to meet the heat transfer requirements for a particular implementation of the electric motor **10**. The cooling fluid may be any fluid having heat transfer properties sufficient to remove the required heat from the motor housing **12**. Where no source of liquid coolant is available, pressurized air may function as the coolant fluid to create airflow over the housing wall outer surface **110**. In most applications, pressurized water functions as the coolant fluid and is pumped through the cooling jacket cavity **114**. In alternative embodiments, other liquid coolants such as polyalkylene glycol (PAG), cutting fluid, oils, other waterless coolants and the like may be used to achieve a desired level of heat transfer.

Due to the positioning of the fluid inlet port **50** at the bottom and the fluid outlet port **52** at the top of the cooling jacket **32** as described above, the coolant such as water will flow through and substantially fill the entire cooling jacket cavity **114** with minimal air gaps forming. In some implementations, it may be desirable to promote coolant fluid flow through a particular path within the cooling jacket cavity **114** that increases fluid flow over the housing wall outer surface **110**. In the illustrated embodiment, the coolant flow through the cooling jacket cavity **114** is facilitated by a first flow control ring **120** and a second flow control ring **122**. In this embodiment, the cutout end wall **42** may be a portion of the second flow control ring **122** at the cutout portion **38** of the jacket wall **34**. In alternative embodiment, the cutout end wall **42** and the second flow control ring **122** may be separate components. The first flow control ring **120** is annular and is installed proximate to and downstream of the fluid inlet port **50**. The first flow control ring **120** extends from the housing wall outer surface **110** to the jacket wall inner surface **112**. The second flow control ring **122** is also annular and is installed between the first flow control ring **120** and the fluid outlet port **52**. The flow control rings **120**, **122** extend from the housing wall outer surface **110** to the jacket wall inner surface **112** and are connected so that there is minimal to no fluid flow between the flow control rings **120**, **122** and the surfaces **110**, **112**.

Fluid flow within the cooling jacket cavity **114** from the fluid inlet port **50** to the fluid outlet port **52** may take a serpentine or winding path by the provision of flow openings in the flow control rings **120**, **122** as illustrated in the sequence of FIGS. **5**A-**5**C. FIG. **5**A is a cross-section perpendicular to the longitudinal axis **76** taken between the fluid inlet port **50** and the first flow control ring **120**. Arrows **130** indicate fluid flow into the cooling jacket cavity **114** through the fluid inlet port **50** proximate the bottom of the cooling jacket **32**. The first flow control ring **120** initially constrains the cooling fluid to flow between the mounting flange **16** and the first flow control ring **120**, around the housing wall and upward toward the cutout portion **38** of the jacket wall **34**. This arrangement provides the coldest cooling fluid directly to the hottest area of the motor housing **12**, which is typically at the base or mount of the motor housing **12**, to achieve the greatest thermal efficiency in the cooling jacket **32**. As seen in FIG. **5**B, which is taken between the first flow control ring **120** and the second flow control ring **122**, the first flow control ring **120** has an arcuate section removed at the top to accommodate the cutout portion **38** and to provide space between ends **132** and the corresponding cutout side walls **40** to form first flow control openings **134**. The first flow control openings **134** allow the cooling fluid that flowed upward from the fluid inlet port **50** between the mounting flange **16** and first flow control ring **120** to flow past the first flow control ring **120** as indicated by arrows **136** and into the area between the flow control rings **120**, **122**. In this area, the cooling fluid flows downward around the housing wall **14**. In alternative configurations where the cutout portion **38** is omitted and the jacket wall **34** encircles the housing wall **14** in that area, the cutout portion of the first flow control ring **120** may be smaller to provide a single smaller first flow control opening **134**.

FIG. **5**C is taken downstream of the fluid outlet port **52** and shows the area of the cooling jacket cavity **114** between the second flow control ring **122** and the jacket end wall **36**. The second flow control ring **122** has an arcuate section removed at the bottom to provide space between ends **138** to form a second flow control opening **140**. The second flow control opening **140** allows the cooling fluid that flowed downward from the first flow control openings **134** between the flow control rings **120**, **122** to flow past the second flow control ring as indicated by arrows **142** and into the area between the second flow control ring **122** and the jacket end wall **36**. In this area, the cooling fluid flows upward around the housing wall **14** and out through the fluid outlet port **52** as indicated by arrows **144**.

Alternative arrangements for controlling fluid flow through the cooling jacket cavity **114** are contemplated. For example, additional flow control rings may be added to achieve a desired flow path around the housing wall **14**. Also, as an alternative to cutting out sections of the flow control rings **120**, **122**, the flow control rings **120**, **122** may be continues circles and have flow control apertures through the flow control rings **120**, **122** that are positioned during assembly to allow cooling fluid to pass flow though the flow control apertures and past the flow control rings **120**, **122** at prescribed locations to achieve the desired fluid flow. Fur-

ther alternative embodiments are contemplated by the inventors as having use in electric motors **10** and cooling jackets **32** in accordance with the present disclosure.

FIGS. **6-8** illustrate isometric views of a second embodiment of an electric motor **200** with fluid cooling in accordance with the present disclosure. The electric motor **200** is also a standard 3 phase A/C induction motor with many elements in common with the electric motor **10**. In the drawing figures and the following discussion, similar components between the embodiments are identified by the same reference numerals. Previous discussion of the similar components for the electric motor **10** have equal application to the electric motor **200** except where noted in the following discussion. Many of the differences in the embodiments relate to the cooling mechanisms.

The electric motor **200** is ideal for similar applications as the liquid-cooled electric motor **10**, but may have particular application in environments where sources for water or other cooling liquids are not available or less feasible to use. For these environments, the electric motor **200** includes a cooling jacket **202** that can keep airflow concentrated tightly around the motor housing **12**. The cooling jacket **202** has a jacket wall **204** surrounding and concentric with the motor housing **12**. The cooling wall **204** may be substantially square in cross-section and dimensioned so that a jacket inner surface **206** fits tightly around the housing wall outer surface **110** of the housing wall **14** as shown in FIGS. **9** and **10**. The electric motor **200** is foot mounted and includes foot brackets **208** mounted on either side of the jacket wall **204** proximate the bottom of the electric motor **200**.

The jacket wall **204** is open at both ends to facilitate airflow in the longitudinal direction over the housing wall outer surface **110**. The airflow is provided by an integral direct drive fan **210** mounted on the cooling jacket **202** at an end opposite the shaft end **20**. The fan **210** has a fan housing **212** with a complimentary shape to the jacket wall **204** for insertion in the open end. A fan grate **214** provides a protective cover at an inlet side of the fan **210**, and an aperture fan discharge wall **216** (FIG. **9**) at an outlet side of the fan **210** allows airflow produced by fan blades **218** to enter a cooling jacket cavity **220** as indicated by arrows **222** in FIG. **9**. A fixed frequency fan motor **224** is mounted to the fan discharge wall **216**, with the fan blades **218** being mounted on a fan shaft **226** extending from the fan motor **224**. The fan motor **224** may typically be synchronous to 1800 RPM or 3600 RPM to provide a constant cooling airflow at a flow rate targeted to maximize cooling efficiency.

The fan motor **224** allows the fan **210** to be operated independent of the electric motor **200** and the rotation of the motor shaft **22**. Consequently, the fan speed is adjustable to achieve a desired airflow **222** and heat transfer from the motor housing **12**. The airflow **222** in the cooling jacket cavity **220** flows around the motor housing **12** in four fluid flow channels **230** (FIG. **10**) defined by the jacket wall inner surface **206** at corners of the jacket wall **204** and corresponding portions of the housing wall outer surface **110** of the housing wall **14**. Of course, the jacket wall **204** may have other geometries such as necessary to achieve desired airflow over the housing wall outer surface **110**. Heat transfer to the exterior of the motor housing **12** is further facilitated by milling longitudinal slots or grooves **232** in the housing wall outer surface **110**. The grooves **232** increase the surface area over which the air flows within the fluid flow channels **230** to draw more heat from the motor housing **12**.

The electric motor **200** implements additional structures for keep heat from the high temperature environment or generated by the electric motor **200** from conducting or transferring up the motor shaft **22** to the critical components within the motor housing **12**. For example, the cross-drilled heat dissipation bores **86** in the motor shaft **22** proximate the shaft end **20** and the high temperature environment remove mass from the center of the motor shaft **22**. The reduced cross-sectional area of the motor shaft **22** reduces the heat transfer rate at the heat dissipation bores **86** while also providing increased exposed surface area for loss of heat to the surrounding atmosphere. Also proximate the shaft end **20**, a first heat slinger **240** is mounted on the motor shaft **22** and rotates with the motor shaft **22**. The first heat slinger **240** may be fabricated from a thermally conductive material such as aluminum and have a plurality of slinger fins **242**. The first heat slinger **240** thermally connects the motor shaft **22** to the surrounding ambient atmosphere. As the motor shaft **22** and the first heat slinger **240** rotate, the first heat slinger **240** dissipates heat outward from the slinger fins **242**. The first heat slinger **240** may also provide cooling to the fixed shaft bearing **46** as the motor shaft **22** rotates and the

In this embodiment in contrast to the electric motor **10**, the motor housing **12** is not mounted to a wall of the high temperature environment in a manner that forms a gas tight or hermetic seal as can be formed with the mounting flange **16** of the electric motor **10**. Instead, the fixed shaft bearing **46** may be relied upon to hermetically seal the motor housing **12**. In one embodiment, the fixed shaft bearing **46** may be a rotary shaft seal of the type disclosed in U.S. Pat. No. 10,054,130 that issued on Aug. 21, 2018, and which is expressly incorporated by reference herein. Bearings such as rotary shaft seal may allow rotation of the motor shaft **22** while forming a seal to prevent unwanted contaminants from entering the motor housing **12** from the high temperature environment. The rotary shaft seal can provide isolation of the motor housing **12** from high temperature and/or chemically induced corrosive environments while allowing rotation of the motor shaft **22** extending there through. The effectiveness of the rotary shaft seal may be increased by pressurizing the seal housing bore to suppress leakage of gases through the shaft seal using a neutral or non-contaminating gas or lubricant. The pressurization can prevent leakage of hazardous gases from the high temperature or corrosive environment to the motor housing **12**.

A second heat slinger **244** (FIG. **9**) may be incorporated on the motor shaft **22** on the opposite side of the motor housing **12**. The second heat slinger **244** may be mounted on the motor shaft **22** by a slinger bolt **246** threaded into a bore in the end of the motor shaft **22** in a manner that facilitates rotation of the second heat slinger **244** with the motor shaft **22**. As heat is generated from the electric current flowing through the stator **70** and the rotor **74**, heat is absorbed by the motor shaft **22**. The integral second heat slinger **244** provides an alternate dissipation path for the heat than being transferred or conducted to the floating shaft bearing **94**, the end bell **24** or other bearing support structure. As heat is conducted through the core of the material of the motor shaft **22**, the cooling provided by the heat slingers **240**, **244** will provide a much lower thermal equilibrium set point. The heat slingers **240**, **244** on both ends of the motor shaft **22** can also act as a balancing or dynamic balancing means in the event the mass of the rotor **74** becomes unbalanced and is not easily accessible after the motor housing **12** is sealed. This may be particularly important in high RPM applications where increased amplitude levels can wear out the equipment faster. Weights may be added or removed from the heat slingers **44**, **106** on either or both ends of the motor shaft **22** to balance the electric motor **200** to ISO standards

prior to completing the assembly or maintenance of the electric motor **200** and installing the impeller.

The illustrated embodiment also provides an alternative mechanism for connecting the shaft portions **78**, **80** of the motor shaft **22**. As shown in FIG. **9**, the exterior shaft portion **80** has a nipple **250** that is received by a bore **252** of the motor housing shaft portion **78** to align the shaft portions **78**, **80**. The facing surfaces of the shaft portions **78**, **80** are chamfered at the edges and welded at the seam to form a secure connection. After welding, the weld is sanded down to make a smooth, continuous surface along the motor shaft **22**. The attachment mechanisms illustrated and described herein are exemplary, and those skilled in the art will understand that alternative connections are possible and contemplated by the inventor.

## INDUSTRIAL APPLICABILITY

The various electric motor designs in accordance with the present disclosure can improve cooling of the components of the electric motor and the overall performance of the electric motors. Electric motors in accordance with the present disclosure may have use in implementations where hermetic or gas tight sealing arrangements are required, but still require a rotating medium such as a fan impeller. The electric motors may be used in vacuum heat treating vessels or in environments containing toxic or explosive gases such as hydrogen that is explosive if exposed to oxygen, or outside ambient atmosphere or ammonia that is corrosive to copper. The direct drive assembly of the electric motors, when coupled with the appropriate fan blade or impeller, can act as a cooling fan or a recirculating fan for these vessels and environments where standard fan or rotary sealing arrangements will not suffice.

Also, typically air cooled models are ideal where belt driving the impeller becomes a maintenance issue or controlling the motor through a VFD controller is required or ideal to control the fan or impeller performance on the fan shaft. By direct driving the impeller. Some processes require multiple or a plethora or fan RPMS to control performance of the fan while the product or process is being maintained, such as glass tempering, or when providing an air or cooling quench to the processed parts is needed for only a period of time and not continuous. This can be done using the direct drive motor where utilizing standard method of belts and pulley and operating at low or high turndown on the motor will not provide sufficient motor cooling rates to the TEFC frame motor being used, as this type of cooling method on this motor, the cooling fan located within the TEFC motor operates at the same synchronous speed as the motor turning. Not ideal for slow RPM or large turndown.

While the preceding text sets forth a detailed description of numerous different embodiments, it should be understood that the legal scope of protection is defined by the words of the claims set forth at the end of this patent. The detailed description is to be construed as exemplary only and does not describe every possible embodiment since describing every possible embodiment would be impractical, if not impossible. Numerous alternative embodiments could be implemented, using either current technology or technology developed after the filing date of this patent, which would still fall within the scope of the claims defining the scope of protection.

It should also be understood that, unless a term was expressly defined herein, there is no intent to limit the meaning of that term, either expressly or by implication, beyond its plain or ordinary meaning, and such term should not be interpreted to be limited in scope based on any statement made in any section of this patent (other than the language of the claims). To the extent that any term recited in the claims at the end of this patent is referred to herein in a manner consistent with a single meaning, that is done for sake of clarity only so as to not confuse the reader, and it is not intended that such claim term be limited, by implication or otherwise, to that single meaning.

What is claimed is:

**1**. An electric motor comprising:

a housing wall having a cylindrical shape, a housing wall inner surface and a housing wall outer surface;

a stator mounted to the housing wall inner surface;

a motor shaft mounted for rotation within the housing wall; and

a cooling jacket wall surrounding and concentric with the housing wall and having a jacket wall inner surface and a jacket wall outer surface, wherein the cooling jacket wall further includes a cutout portion extending axially from a first jacket wall end of the cooling jacket wall and providing access to a corresponding portion of the housing wall outer surface and a cutout wall extending from the cooling jacket wall to the housing wall outer surface, wherein the housing wall outer surface and the jacket wall inner surface define a cooling jacket cavity, and wherein the cooling jacket wall has a fluid inlet port proximate the first jacket wall end and a fluid outlet port proximate a second end of the cooling jacket wall, with the fluid inlet port positioned below the fluid outlet port, and cooling fluid flows into the cooling jacket cavity through the fluid inlet port, flows through the cooling jacket cavity over the housing wall outer surface and flows out of the cooling jacket cavity through the fluid outlet port.

**2**. The electric motor of claim **1**, comprising: a first flow control ring having an annular shape and extending between the housing wall outer surface and the jacket wall inner surface, and having a first flow control opening allowing cooling fluid to flow past the first flow control ring, wherein the first flow control ring is positioned between the fluid inlet port and the fluid outlet port; and

a second flow control ring having an annular shape and extending between the housing wall outer surface and the jacket wall inner surface, and having a second flow control opening allowing cooling fluid to flow past the second flow control ring, wherein the second flow control ring is positioned between the first flow control ring and the fluid outlet port so that cooling fluid entering the cooling jacket cavity through the fluid inlet port flows through the first flow control opening, through the second flow control opening and then out of the cooling jacket cavity through the fluid outlet port.

**3**. The electric motor of claim **2**, wherein the first flow control opening is disposed above the fluid inlet port and the second flow control opening is disposed below the first fluid control opening.

**4**. The electric motor of claim **3**, wherein the first flow control opening is disposed diametrically opposite the second flow control opening within the cooling jacket cavity.

**5**. The electric motor of claim **2**, wherein the first flow control opening is defined between a first flow control ring end and a corresponding portion of the cutout wall.

**6**. The electric motor of claim **2**, wherein the first flow control opening comprises a pair of first flow control openings wherein each of the pair of first flow control openings is defined between a first flow control ring end and a corresponding portion of the cutout wall.

7. The electric motor of claim 2, wherein the cutout wall comprises a cutout end wall that is a portion of the second flow control ring.

8. The electric motor of claim 1, wherein the motor shaft comprises:

a motor housing shaft portion disposed within the housing wall with a rotor mounted thereon, wherein the motor housing shaft portion is fabricated from an electrically conductive material; and

an exterior shaft portion connected to the motor housing shaft portion and disposed outward of an end of the housing wall, wherein the exterior shaft portion is fabricated from material having a melting point greater than 2200° F.

9. The electric motor of claim 1, wherein the fluid inlet port is positioned below the cutout portion.

10. An electric motor comprising:

a housing wall having a cylindrical shape, a housing wall inner surface and a housing wall outer surface;

a stator mounted to the housing wall inner surface;

a motor shaft mounted for rotation within the housing wall;

a cooling jacket wall surrounding and concentric with the housing wall and having a jacket wall inner surface and a jacket wall outer surface, wherein the cooling jacket wall further includes a cutout portion extending axially from a first jacket wall end of the cooling jacket wall and providing access to a corresponding portion of the housing wall outer surface;

a cutout wall extending from the cooling jacket wall to the housing wall outer surface;

a first jacket end wall connected to the jacket wall proximate the first jacket wall end and to the housing wall; and

a second jacket end wall connected to the jacket wall proximate a second jacket wall end and to the housing wall, wherein the housing wall outer surface, the jacket wall inner surface, the first jacket end wall and the second jacket end wall define a cooling jacket cavity, and wherein the cooling jacket wall has a fluid inlet port proximate the first jacket end wall and a fluid outlet port proximate the second jacket end wall and cooling fluid flows into the cooling jacket cavity through the fluid inlet port, flows through the cooling jacket cavity over the housing wall outer surface and flows out of the cooling jacket cavity through the fluid outlet port.

11. The electric motor of claim 10, wherein the fluid inlet port is positioned below the fluid outlet port.

12. The electric motor of claim 11, comprising: a first flow control ring having an annular shape and extending between the housing wall outer surface and the jacket wall inner surface, and having a first flow control opening allowing cooling fluid to flow past the first flow control ring, wherein the first flow control ring is positioned between the fluid inlet port and the fluid outlet port; and

a second flow control ring having an annular shape and extending between housing wall outer surface and the jacket wall inner surface, and having a second flow control opening allowing cooling fluid to flow past the second flow control ring, wherein the second flow control ring is positioned between the first flow control ring and the fluid outlet port so that cooling fluid entering the cooling jacket cavity through the fluid inlet port flows through the first flow control opening, through the second flow control opening and then out of the cooling jacket cavity through the fluid outlet port.

13. The electric motor of claim 12, wherein the first flow control opening is disposed above the fluid inlet port and the second flow control opening is disposed below the first fluid control opening.

14. The electric motor of claim 13, wherein the first flow control opening is disposed diametrically opposite the second flow control opening within the cooling jacket cavity.

15. The electric motor of claim 12, wherein the first flow control ring has an arcuate section cut out from the first flow control ring, and where the first flow control opening is defined by a gap between ends of the first flow control ring from which the arcuate section was cut.

16. The electric motor of claim 12, wherein the first flow control opening is defined between a first flow control ring end and a corresponding portion of the cutout wall.

17. The electric motor of claim 12, wherein the first flow control opening comprises a pair of first flow control openings wherein each of the pair of first flow control openings is defined between a first flow control ring end and a corresponding portion of the cutout wall.

18. The electric motor of claim 12, wherein the cutout wall comprises a cutout end wall that is a portion of the second flow control ring.

19. The electric motor of claim 10, wherein the fluid inlet port is positioned below the cutout portion.

* * * * *