US007946986B2

(12) **United States Patent**
Bockenstedt et al.

(10) **Patent No.: US 7,946,986 B2**
(45) **Date of Patent: May 24, 2011**

(54) **CARTRIDGE FOR USE WITH AN ULTRASOUND THERAPY HEAD**

(75) Inventors: **Craig R. Bockenstedt**, Bothell, WA (US); **Jeffrey R. Crunkilton**, Everett, WA (US); **Gregory T. Wing**, Carnation, WA (US); **Frederick J. Bennett**, Bellevue, WA (US); **Blake W. Little**, Bothell, WA (US)

(73) Assignee: **Medicis Technologies Corporation**, Bothell, WA (US)

(*) Notice: Subject to any disclaimer, the term of this patent is extended or adjusted under 35 U.S.C. 154(b) by 0 days.

(21) Appl. No.: **12/794,611**

(22) Filed: **Jun. 4, 2010**

(65) **Prior Publication Data**

US 2011/0077556 A1 Mar. 31, 2011

Related U.S. Application Data

(60) Provisional application No. 61/246,937, filed on Sep. 29, 2009.

(51) **Int. Cl.**
A61B 8/00 (2006.01)

(52) **U.S. Cl.** **600/437**; 601/2; 601/4; 600/439; 600/446; 600/459; 310/317; 310/319; 310/322; 73/625; 73/626; 73/618; 73/602

(58) **Field of Classification Search** 600/407, 600/437, 439, 446, 459, 463; 601/2, 4; 606/1–3, 606/11, 19; 310/317, 319, 322, 334–337; 73/587, 620, 632–634, 639
See application file for complete search history.

(56) **References Cited**

U.S. PATENT DOCUMENTS

4,429,577	A *	2/1984	Sorenson et al.	73/644
5,879,314	A	3/1999	Peterson et al.	
2001/0046184	A1	11/2001	Reitter et al.	
2008/0243003	A1	10/2008	Crunkilton et al.	
2008/0243035	A1	10/2008	Crunkilton	
2009/0143673	A1	6/2009	Drost et al.	
2009/0171252	A1	7/2009	Bockenstedt et al.	
2009/0216121	A1	8/2009	Lacoste	

FOREIGN PATENT DOCUMENTS

EP	2226099	A1	9/2010
WO	WO 2009/052470	A2	4/2009
WO	WO 2009/082874	A2	7/2009

OTHER PUBLICATIONS

U.S. Appl. No. 12/794,415, filed Jun. 4, 2010, Ulric.

(Continued)

Primary Examiner — Tse Chen
Assistant Examiner — John F Ramirez
(74) *Attorney, Agent, or Firm* — Kilpatrick Townsend and Stockton LLP

(57) **ABSTRACT**

A medical ultrasound system. A base unit is included having system electronics, a user interface and ultrasound control electronics. An ultrasound therapy head is in electronic communication with the base unit. The therapy head includes a replaceable, sealed transducer cartridge with a coupling fluid therein. A cooling system is provided for cooling the coupling fluid. A plurality of guide indicators are positioned around the therapy head to align with crossed lines on a patient so as to properly align the therapy head prior to use. The therapy head can provide variable treatments to an area while the therapy head is in contact with a patient.

11 Claims, 61 Drawing Sheets

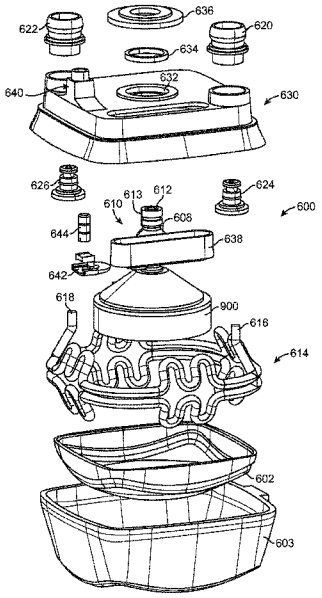

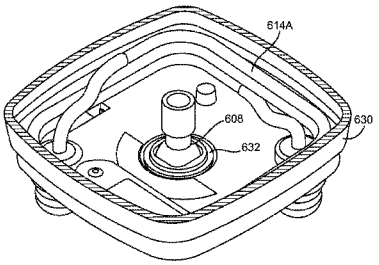

OTHER PUBLICATIONS

U.S. Appl. No. 12/794,595, filed Jun. 4, 2010, Wings.
U.S. Appl. No. 12/794,653, filed Jun. 4, 2010, Slobodzian.
U.S. Appl. No. 12/794,669, filed Jun. 4, 2010, Wing.
U.S. Appl. No. 29/363,081, filed Jun. 4, 2010, Ladwig.
U.S. Appl. No. 29/363,084, filed Jun. 4, 2010, Ladwig.
U.S. Appl. No. 29/363,086, filed Jun. 4, 2010, Crunkilton.
U.S. Appl. No. 29/363,089, filed Jun. 4, 2010, Porter.
International Search Report and Written Opinion of PCT Application No. PCT/US2010/050267, mailed Dec. 1, 2010, 8 pages total.

* cited by examiner

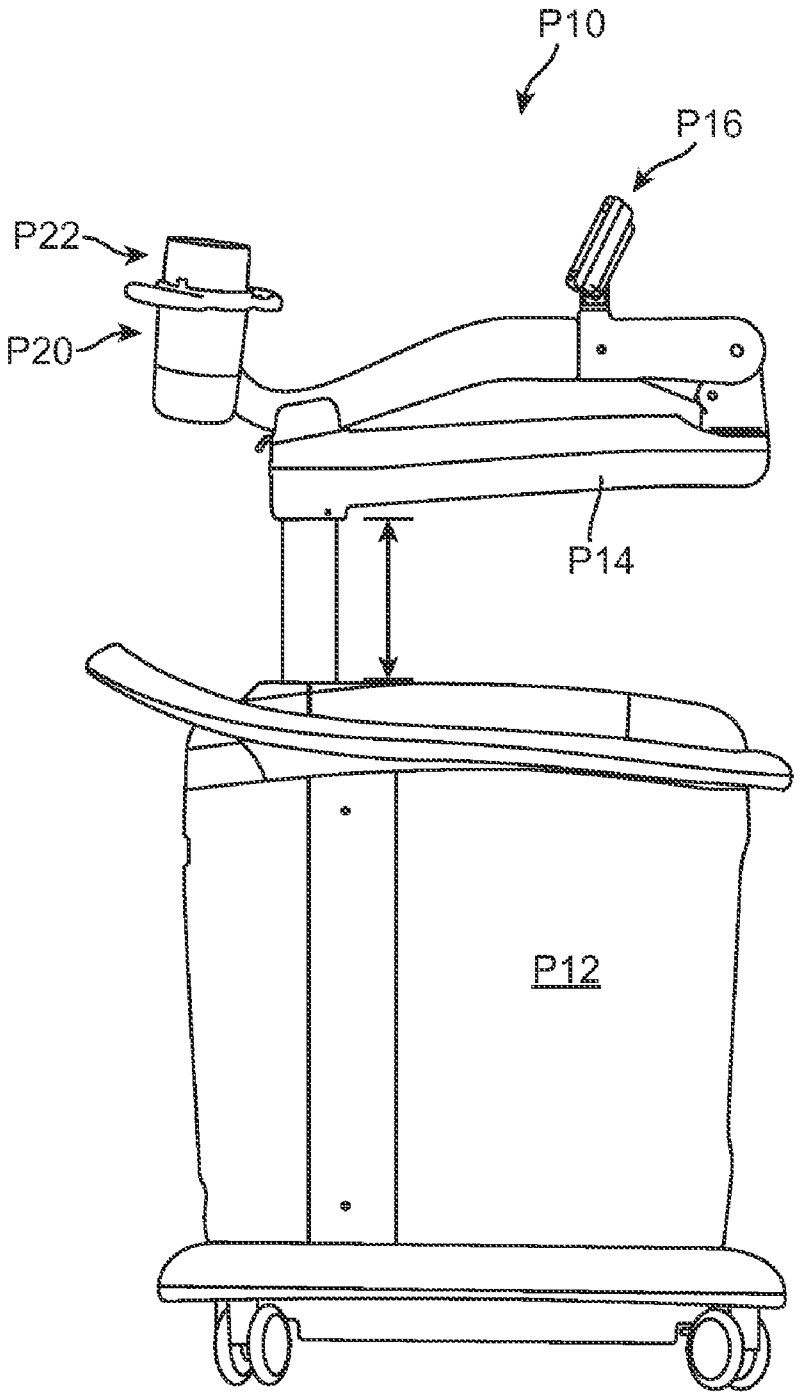

FIG. 1
(PRIOR ART)

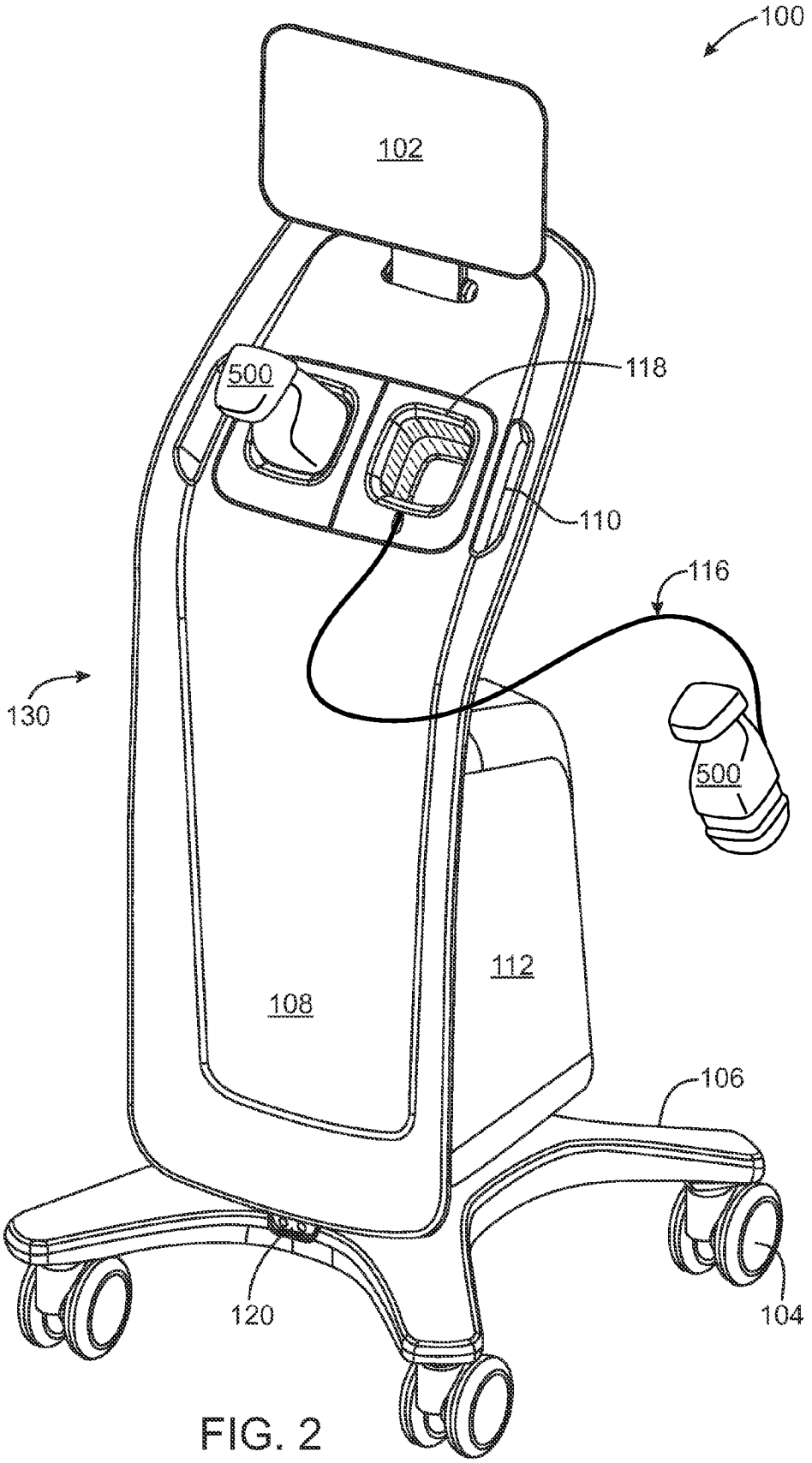

FIG. 2

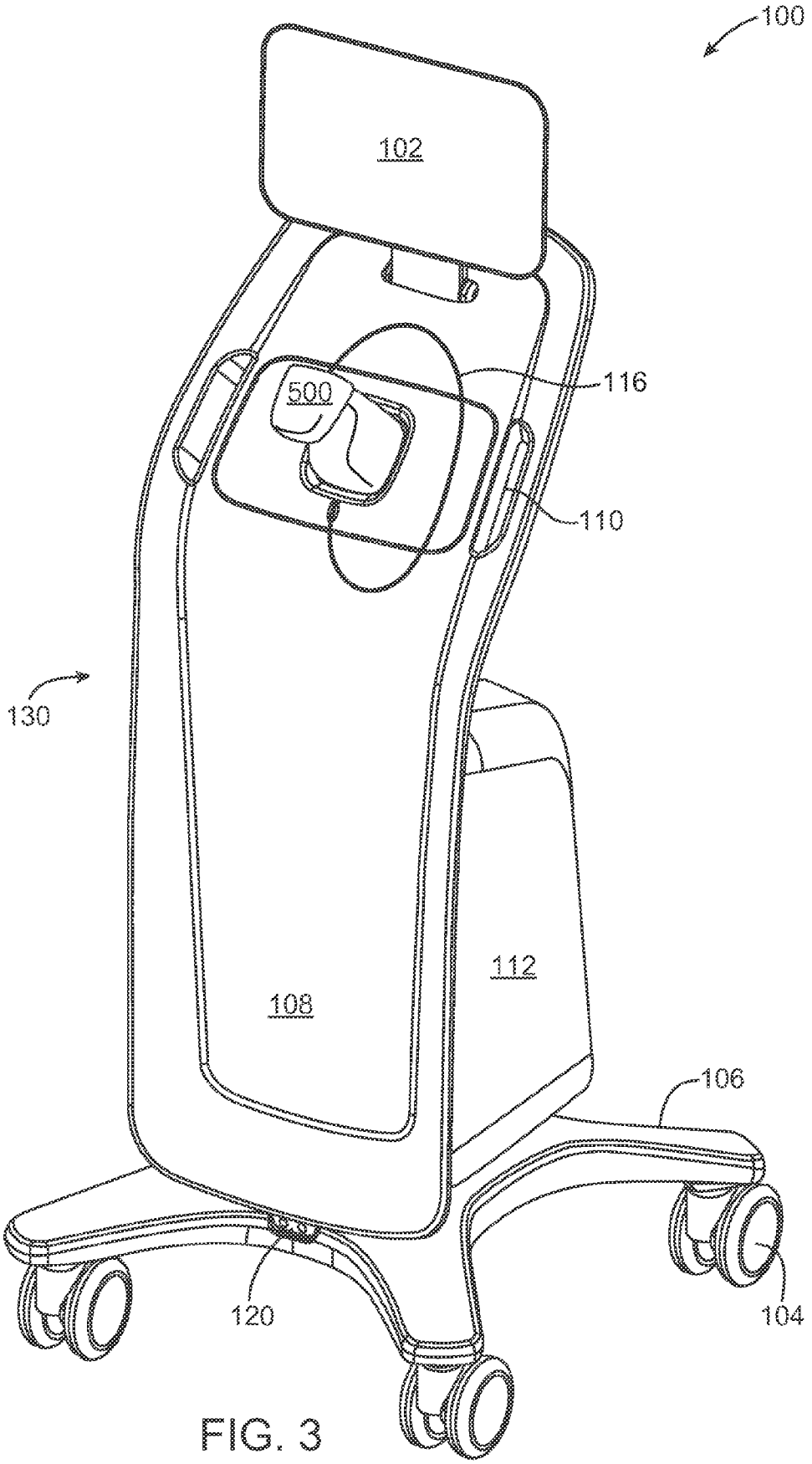

FIG. 3

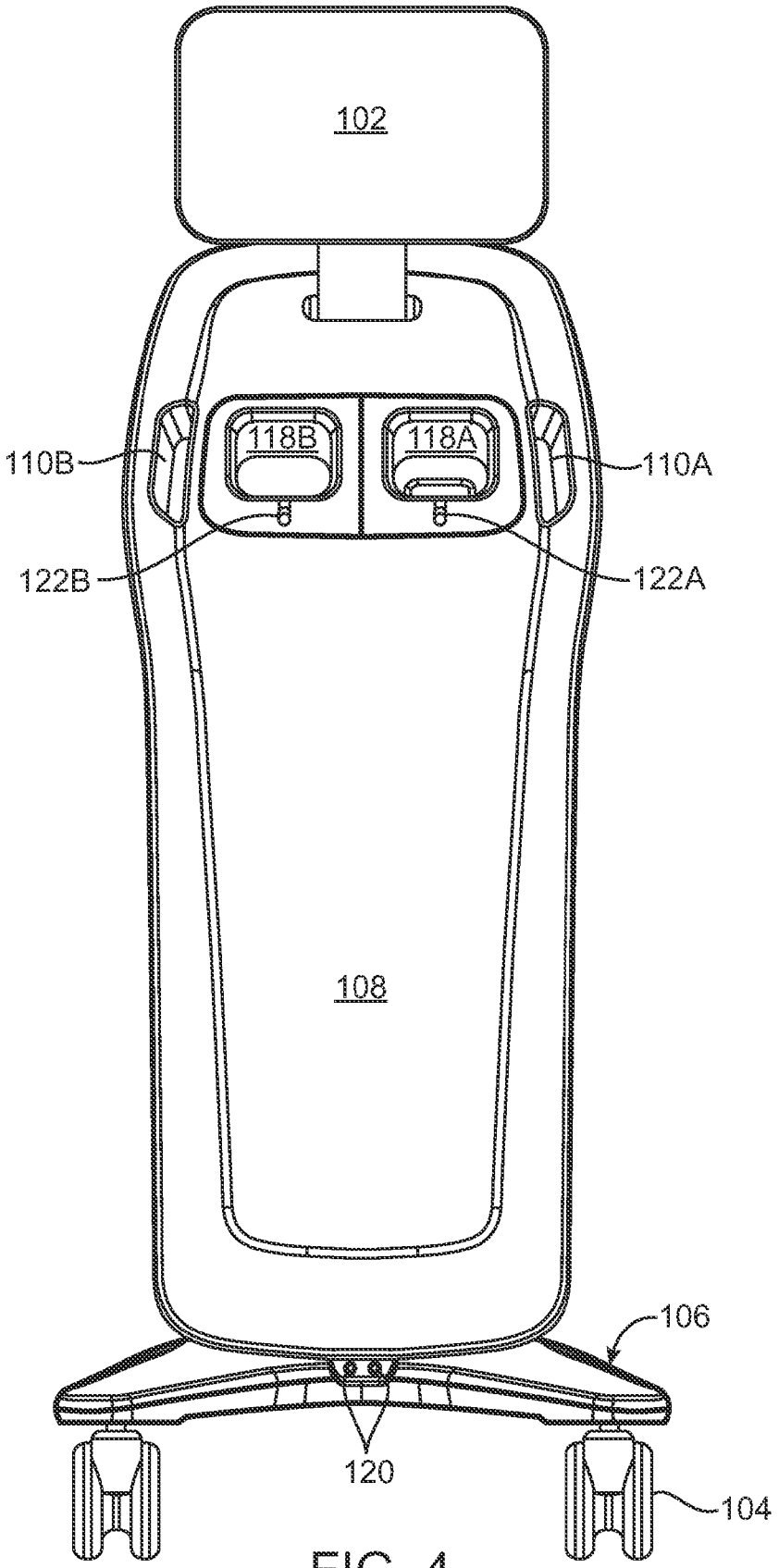

FIG. 4

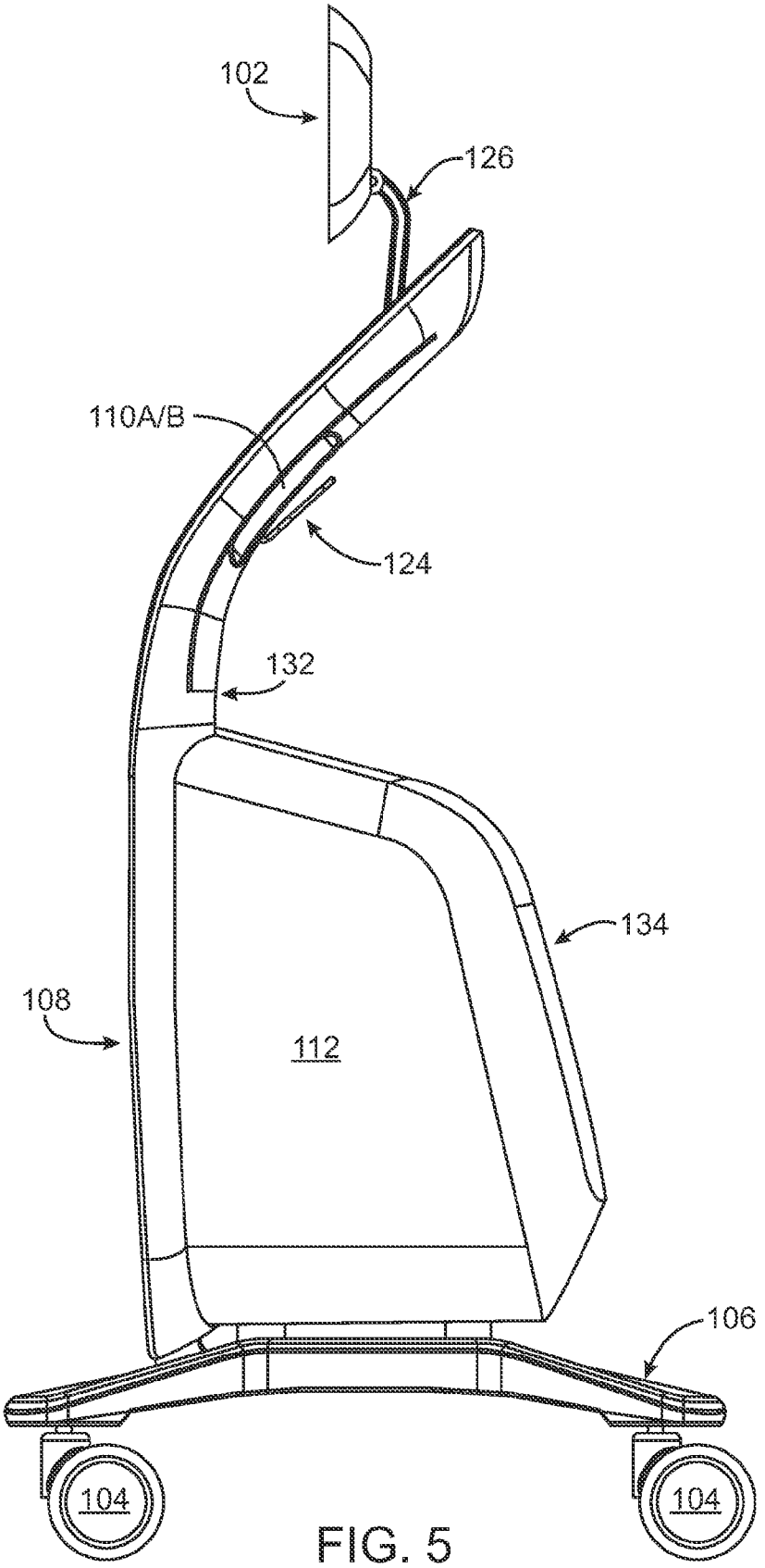

FIG. 5

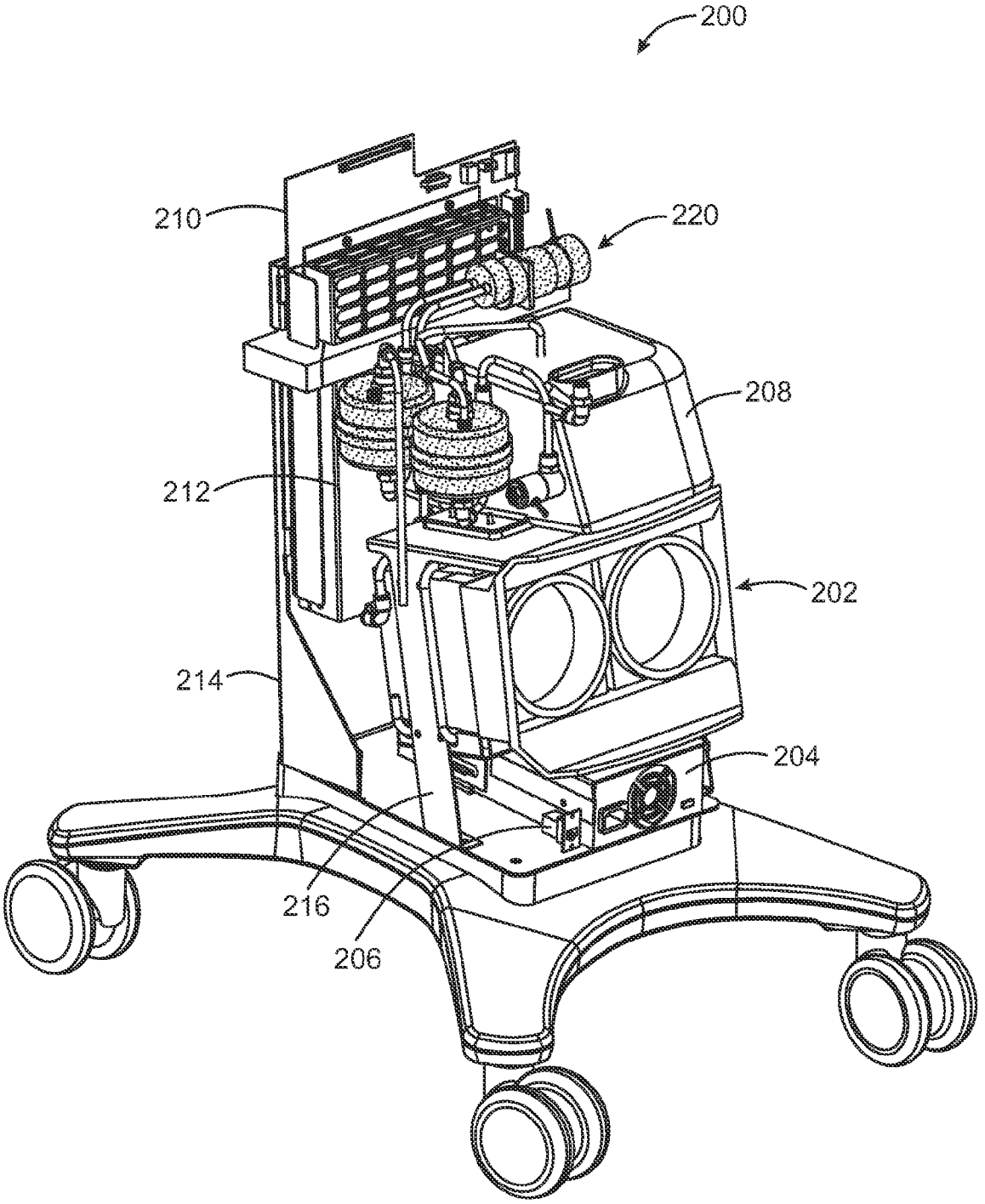

FIG. 6

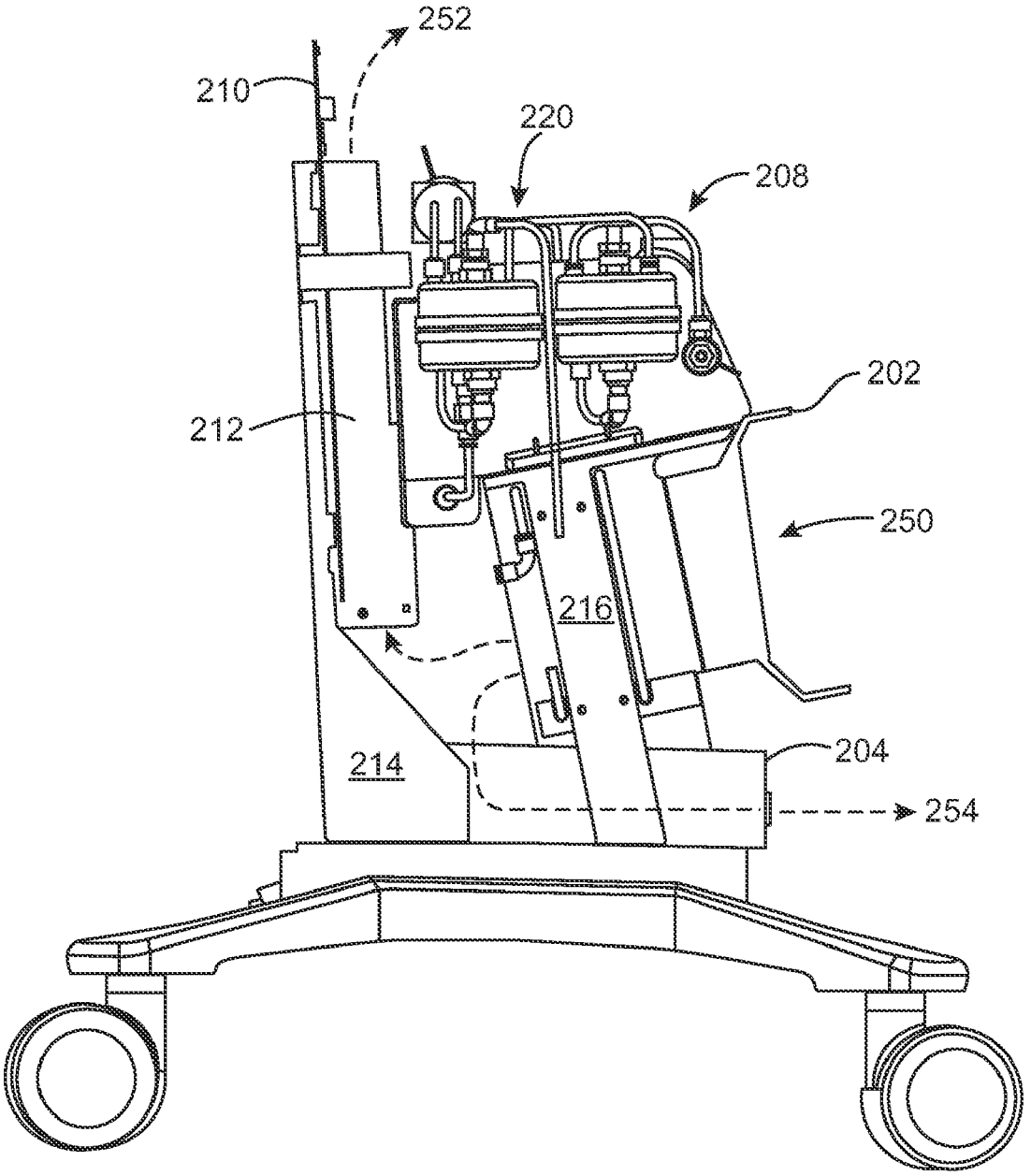

FIG. 7

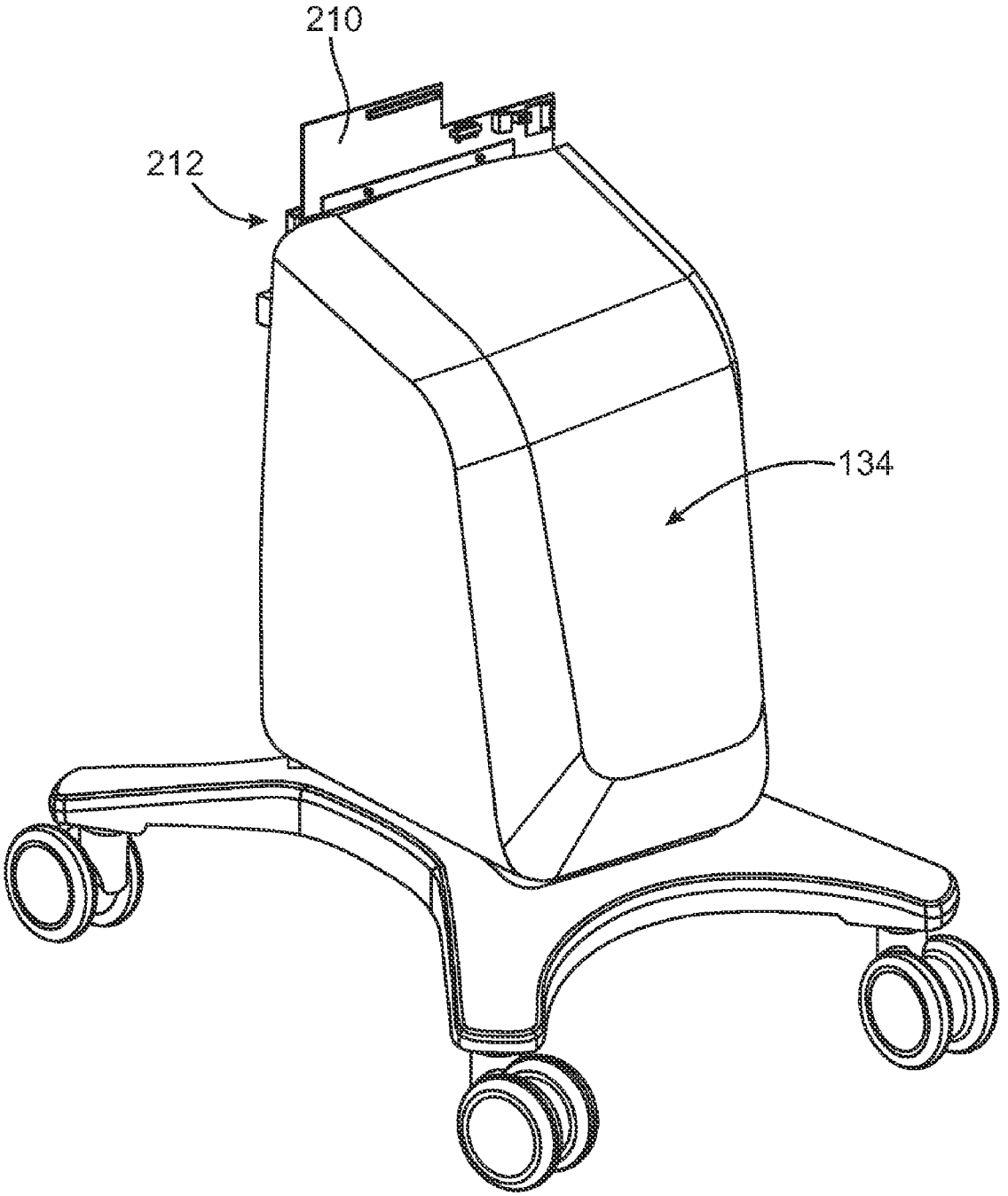

FIG. 8

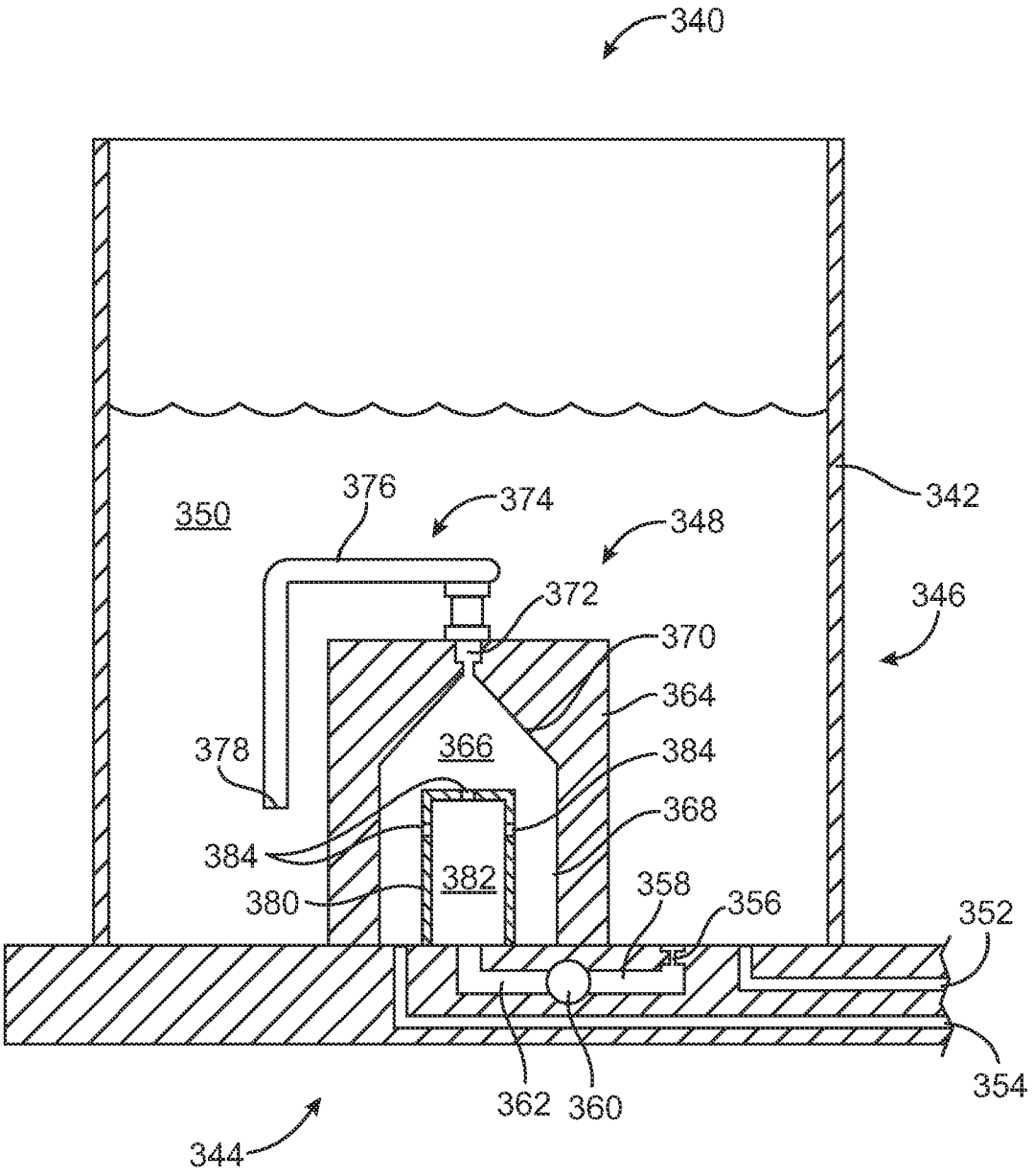
340
342
350
376
374
348
346
372
370
364
378
366
384
368
384
382
380
358
356
352
354
362
360
344

FIG. 9

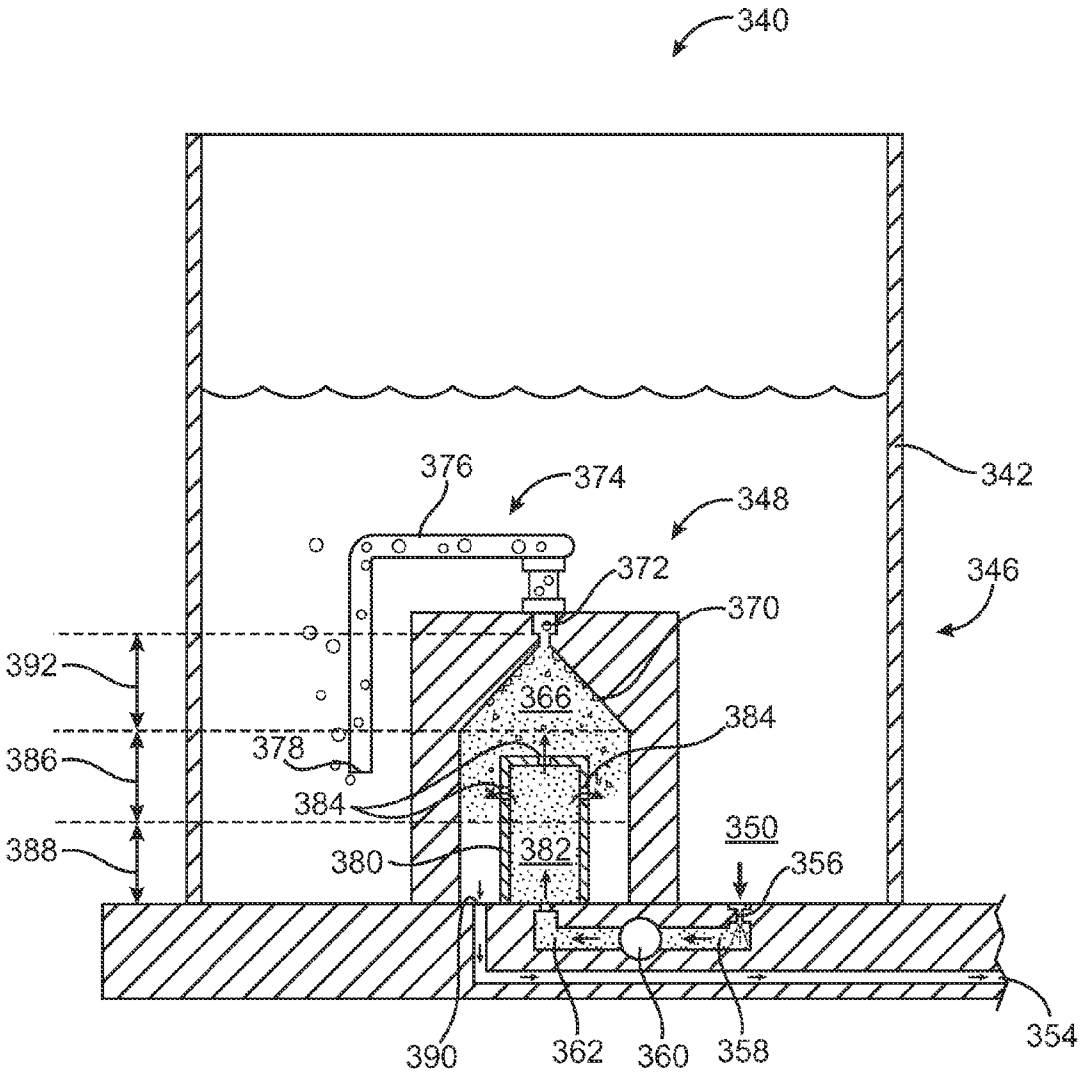
340
342
346
348
374
376
372
370
366
384
378
384
392
386
388
380
382
350
356
390
362
360
358
354

FIG. 10A

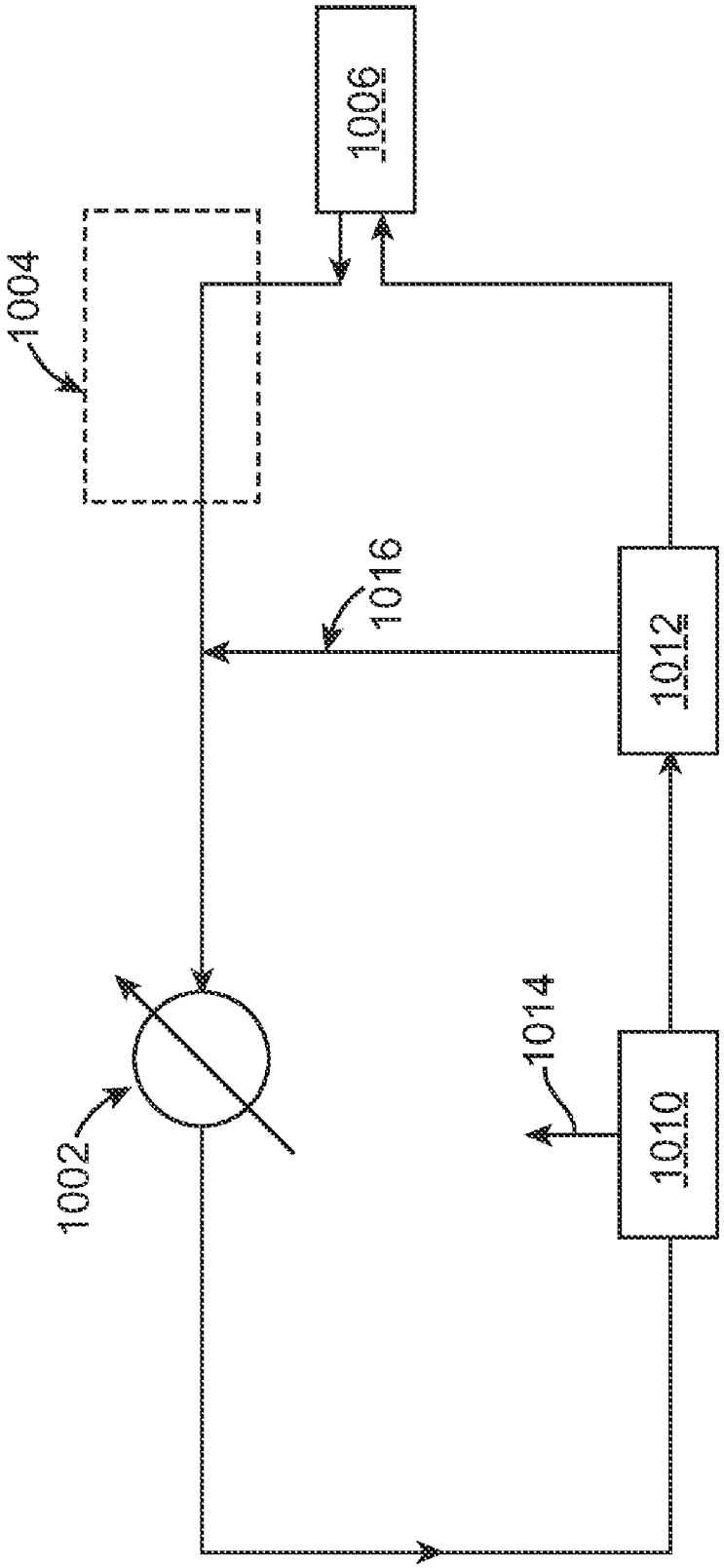

FIG. 10B

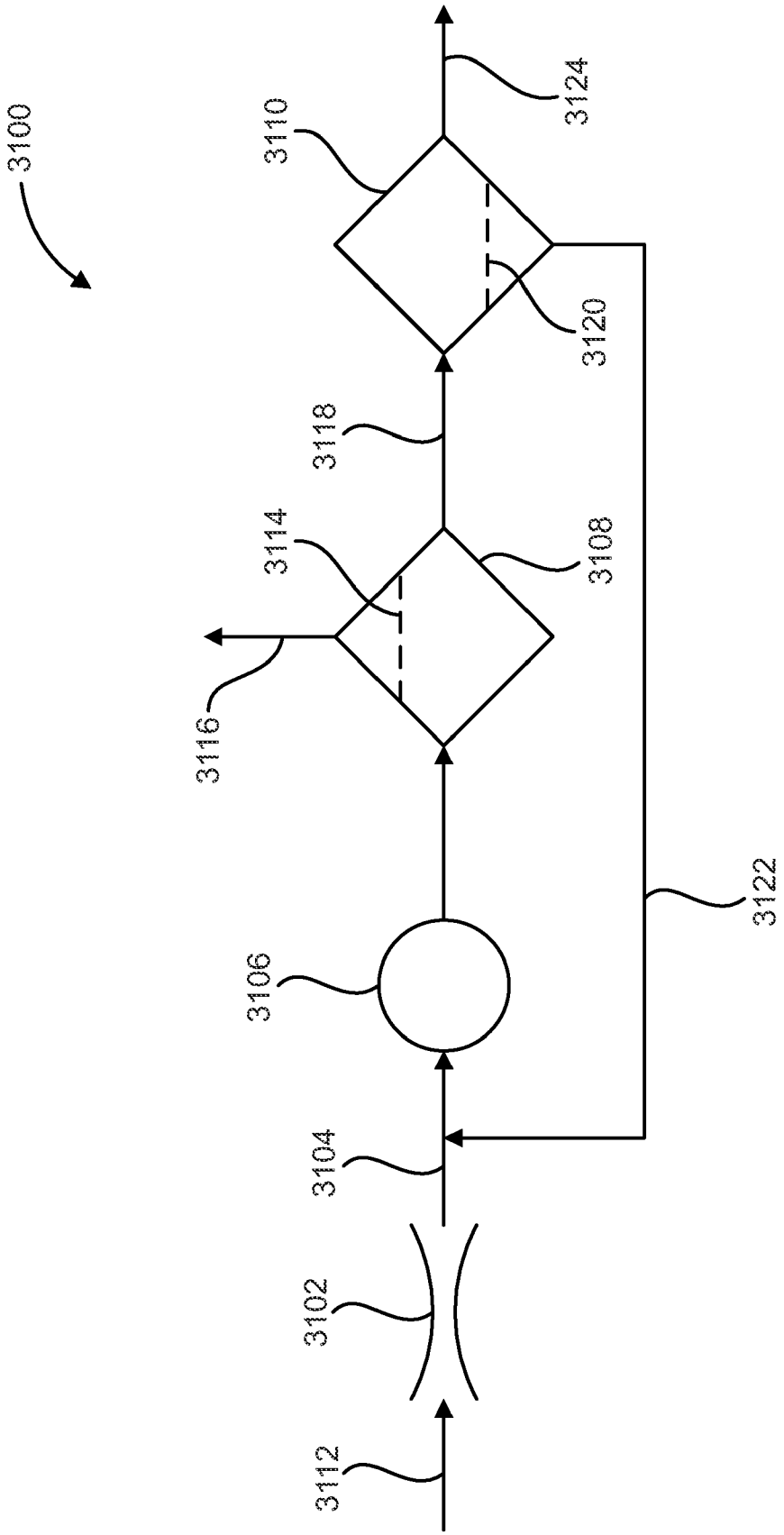
3100
3110
3124
3120
3118
3114
3108
3116
3122
3106
3104
3102
3112

FIG. 11

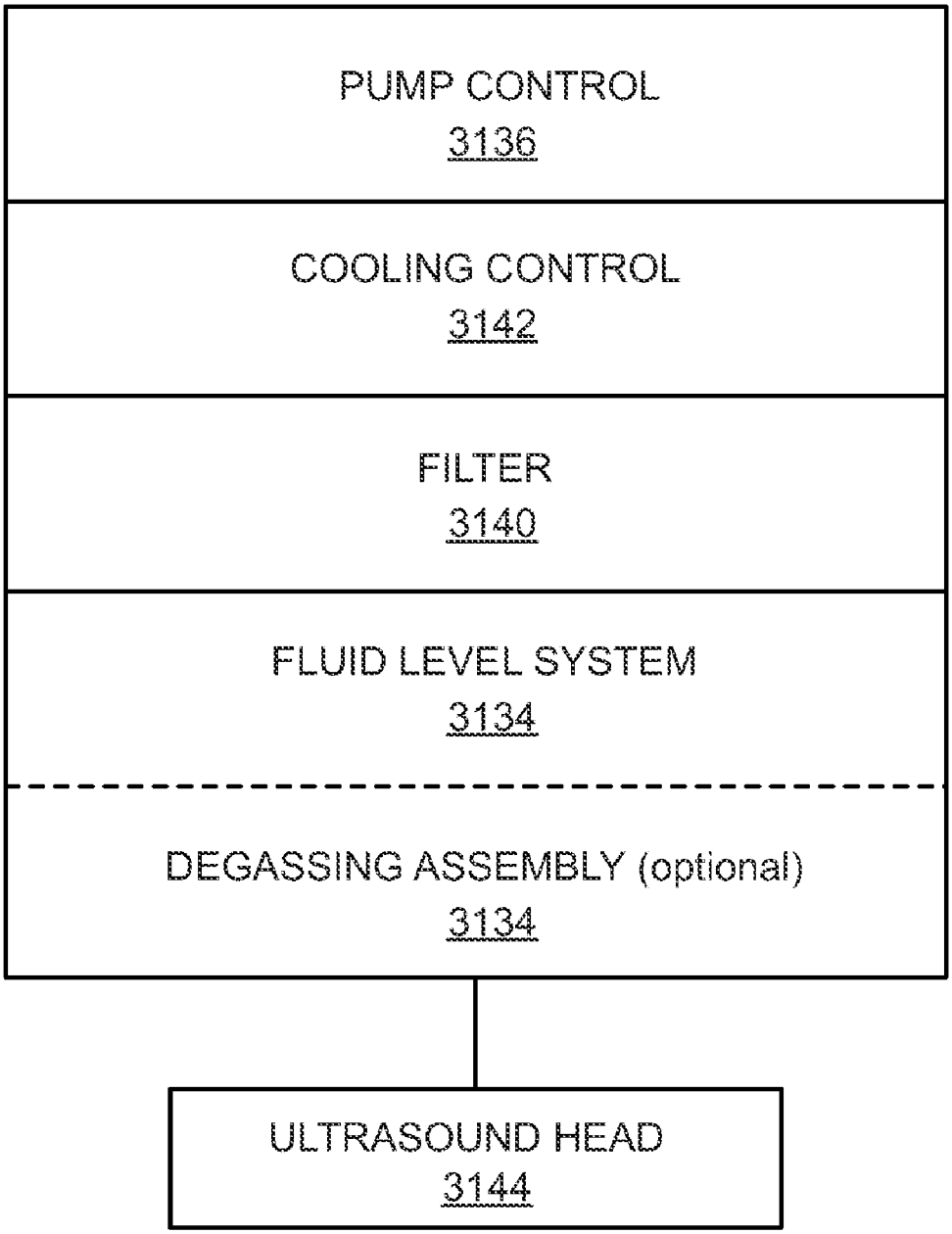
PUMP CONTROL
3136
COOLING CONTROL
3142
FILTER
3140
FLUID LEVEL SYSTEM
3134
DEGASSING ASSEMBLY (optional)
3134
ULTRASOUND HEAD
3144

FIG. 12

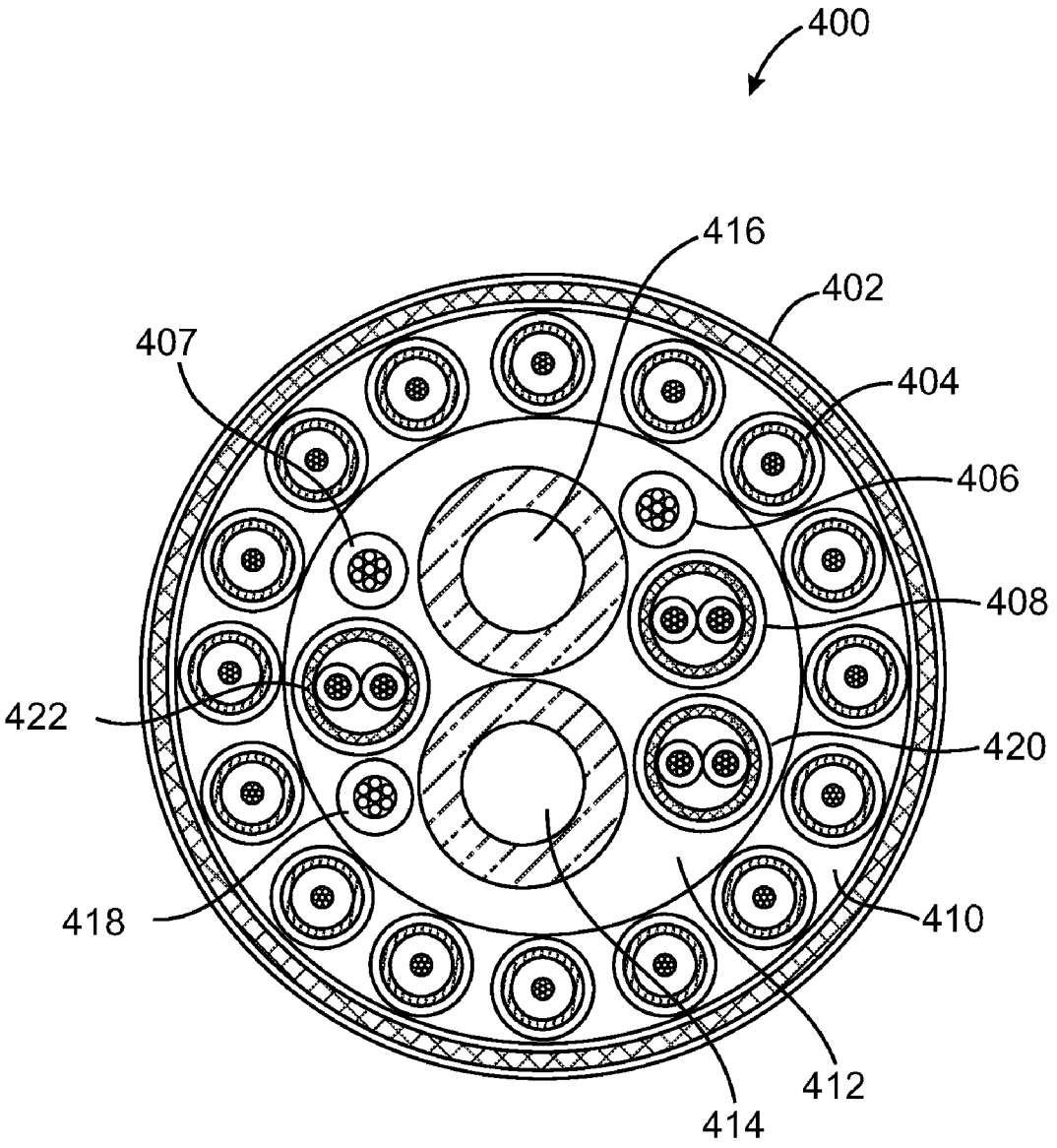

FIG. 13

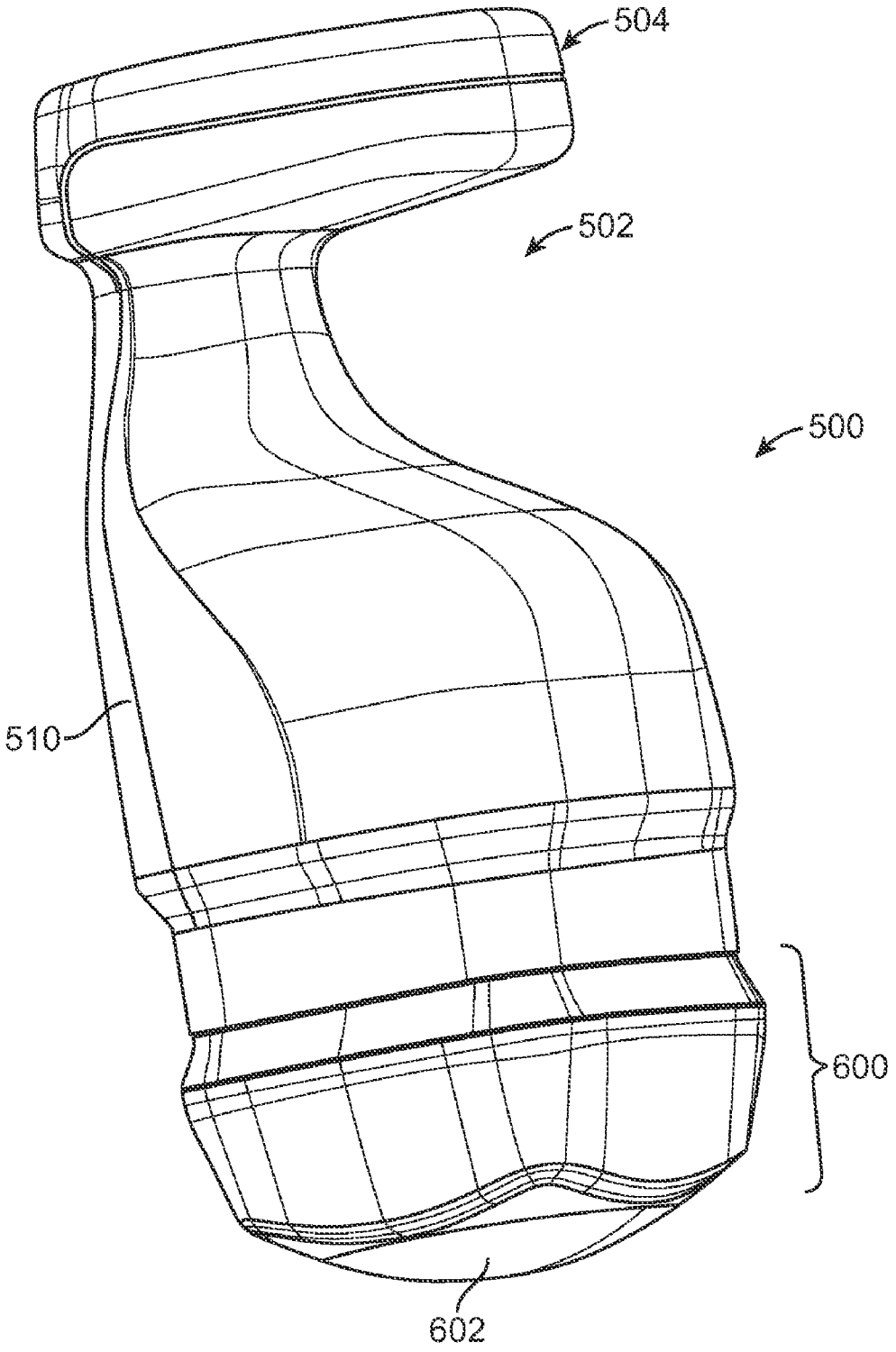

FIG. 14

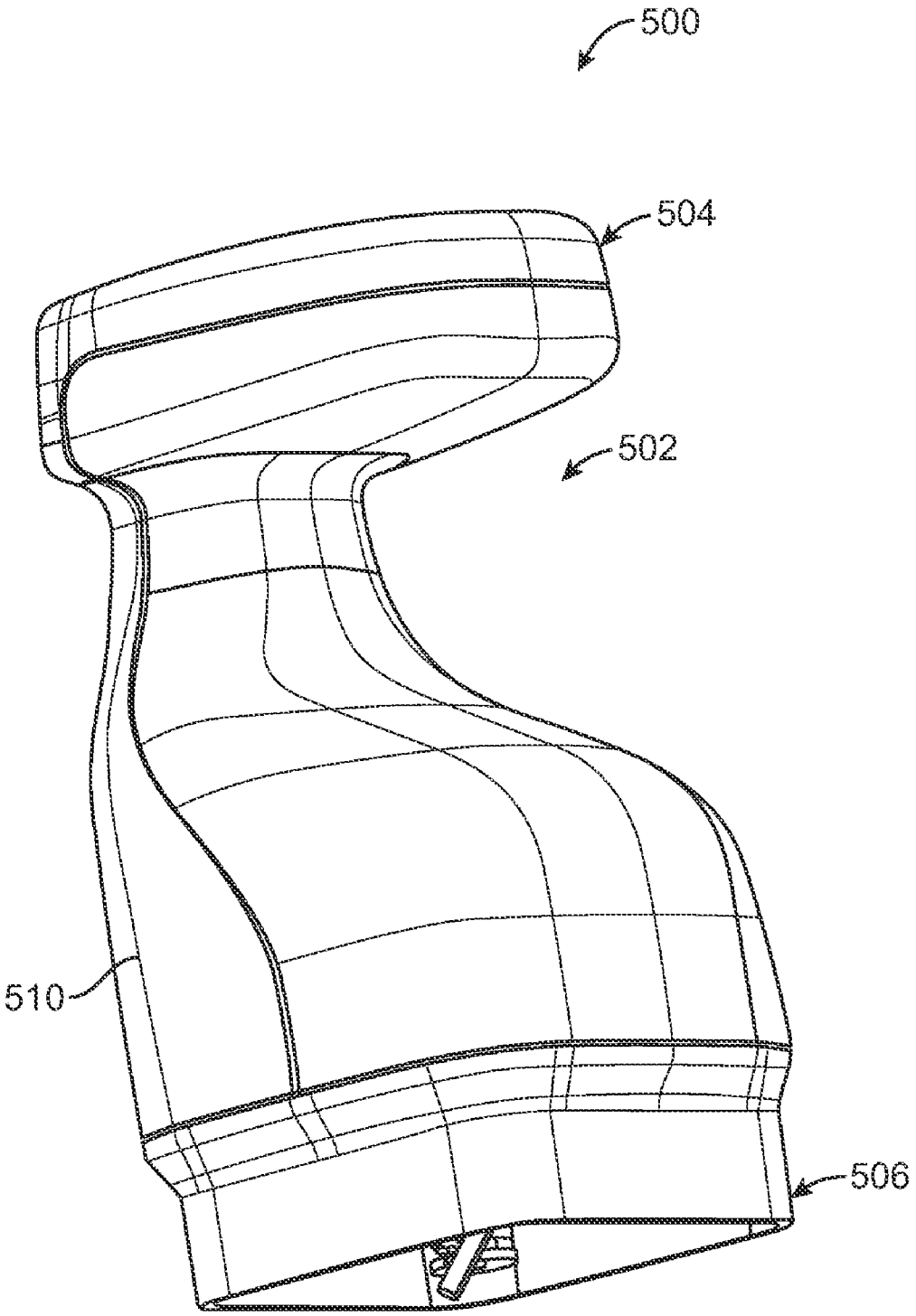

FIG. 15

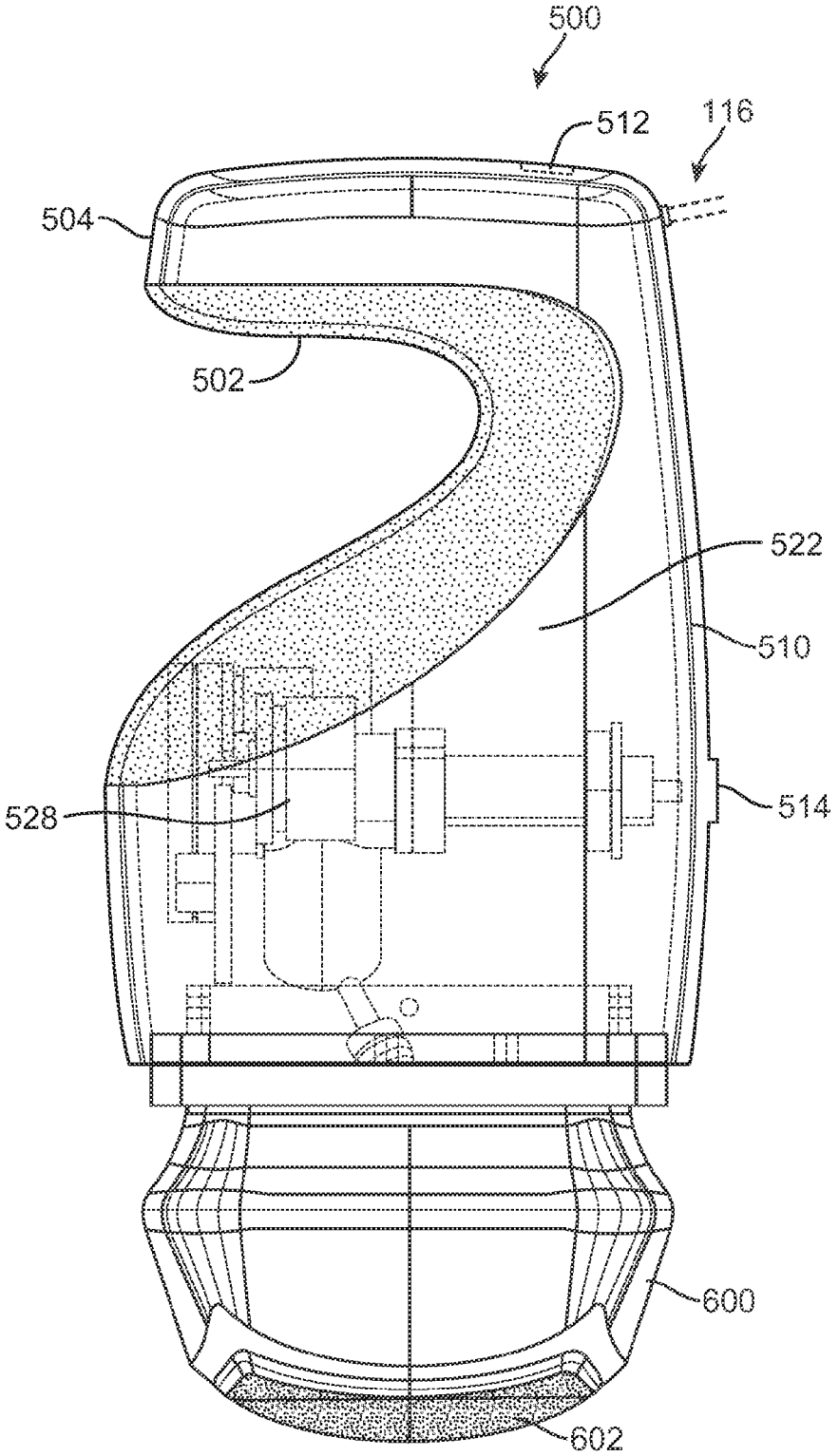

FIG. 16

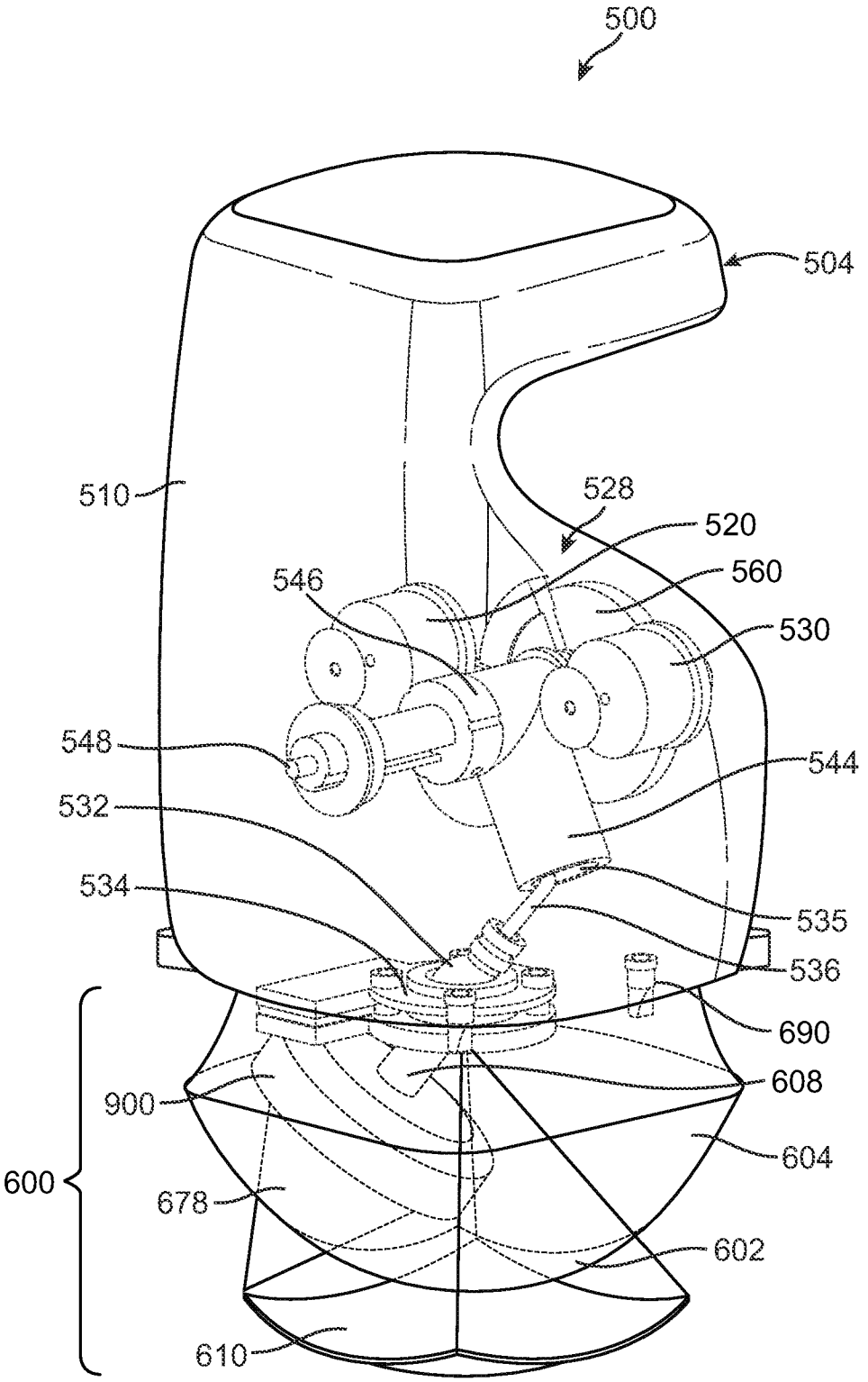
500
504
510
528
520
560
546
530
548
544
532
534
535
536
690
608
900
604
600
678
602
610

FIG. 17

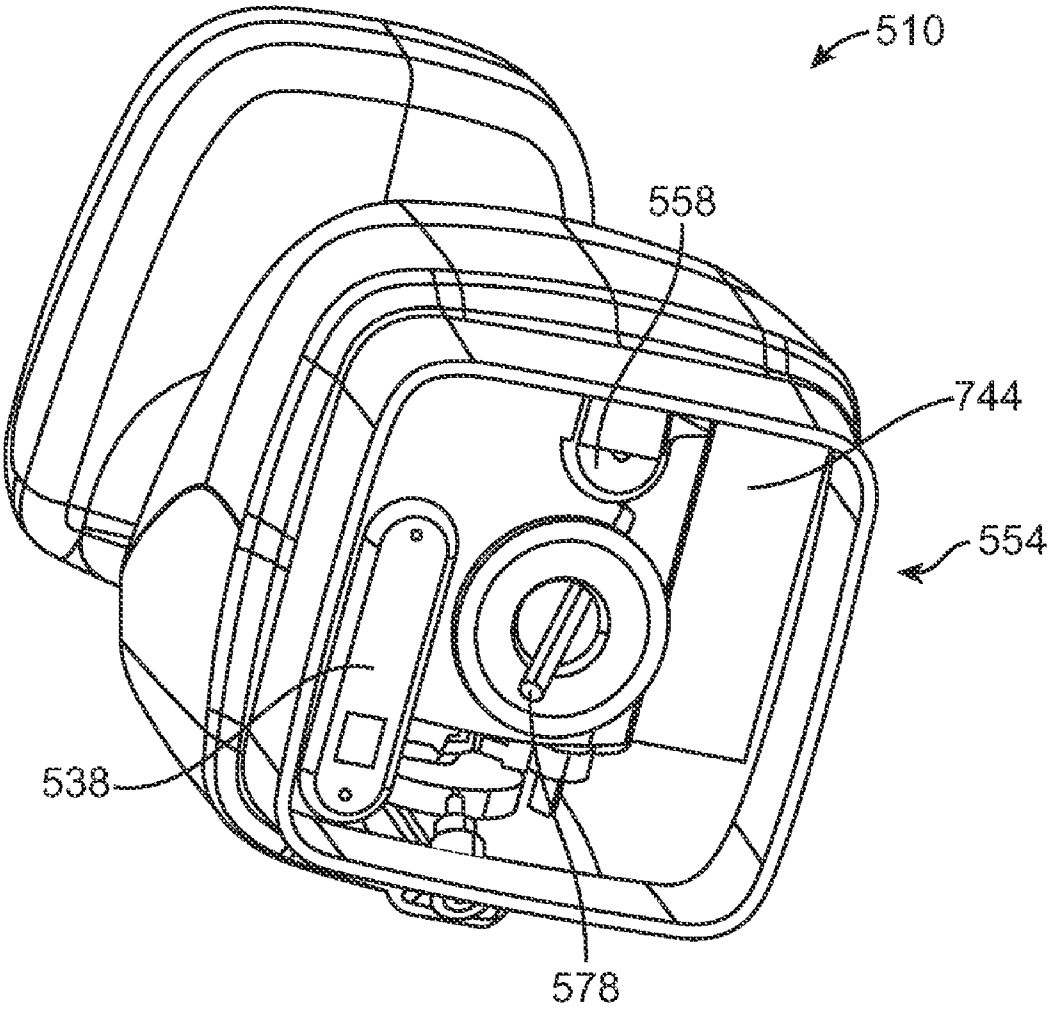

FIG. 18

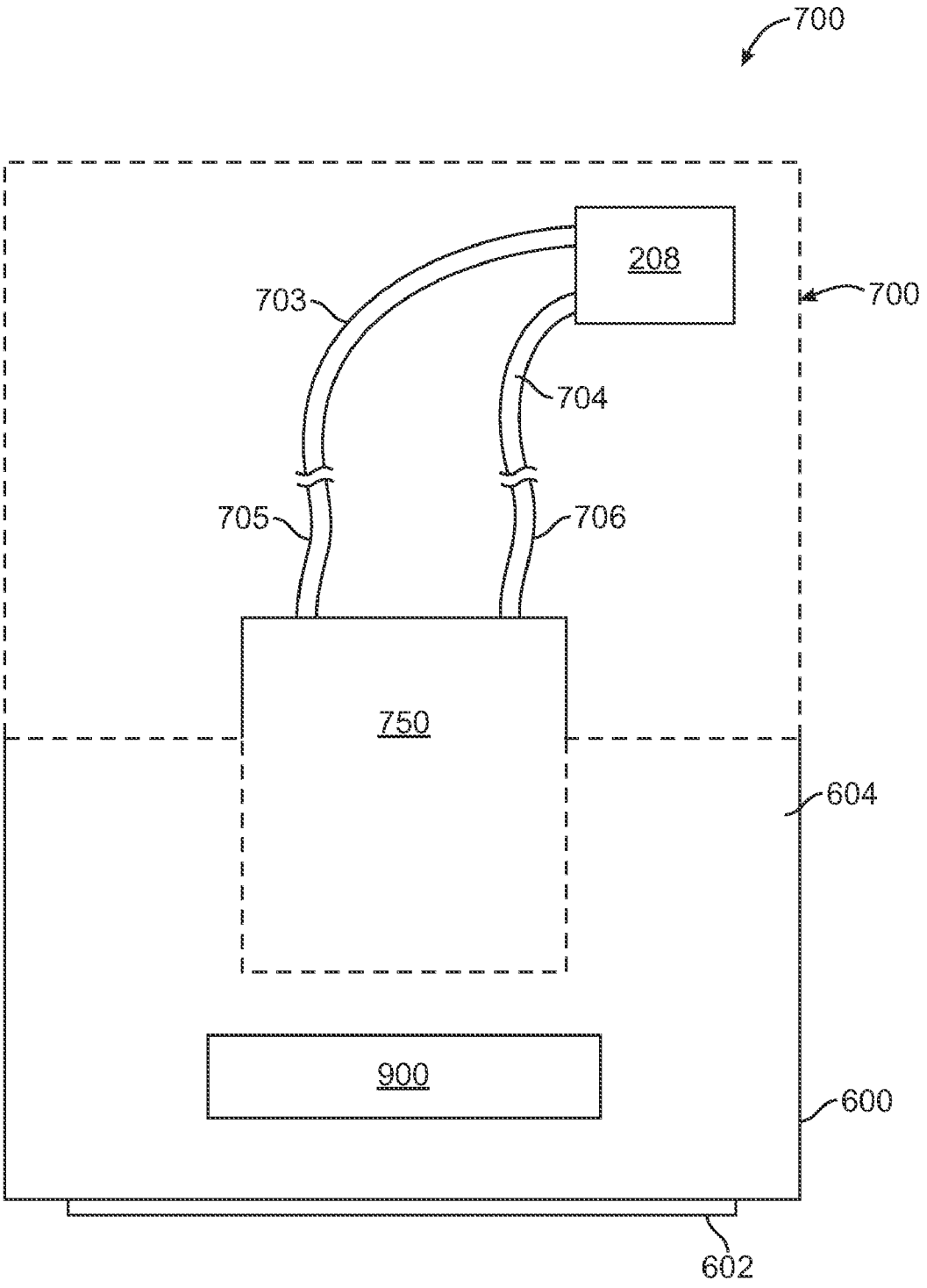

FIG. 19

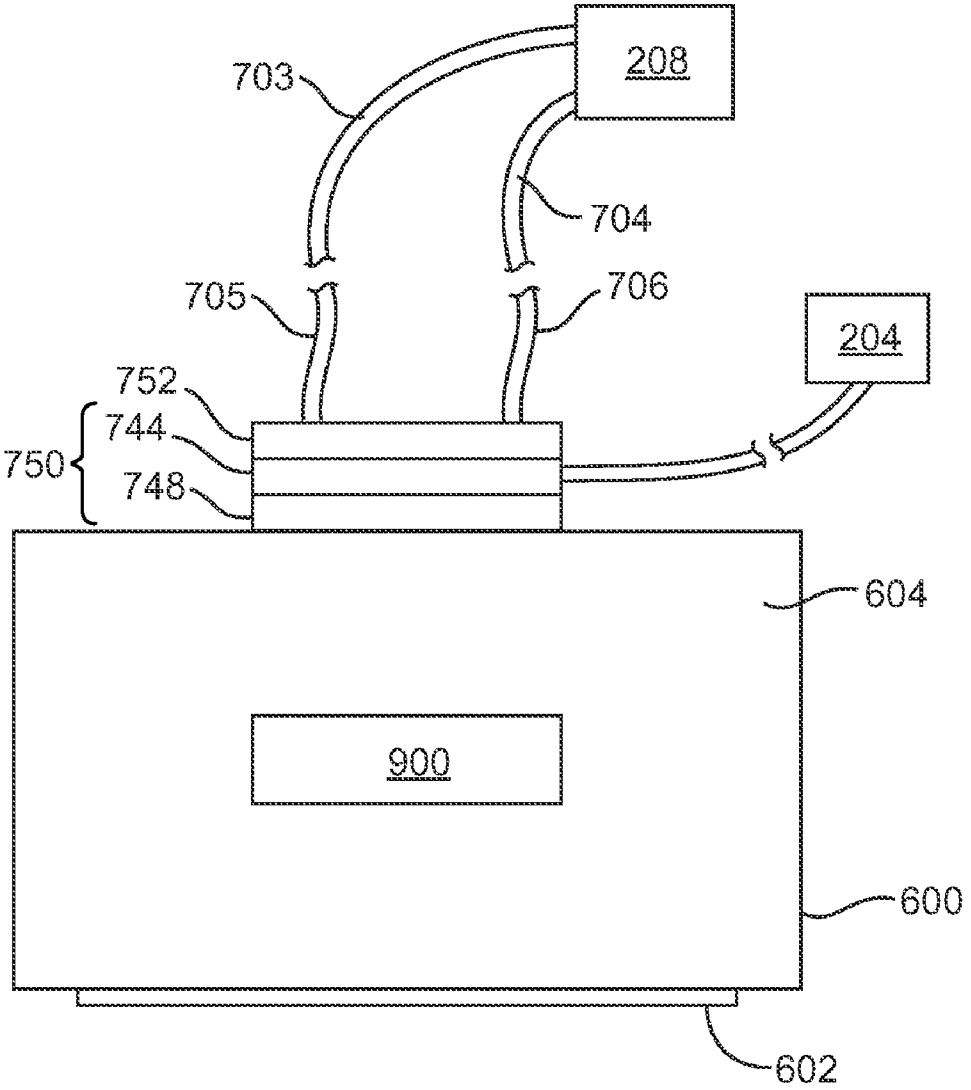

FIG. 20

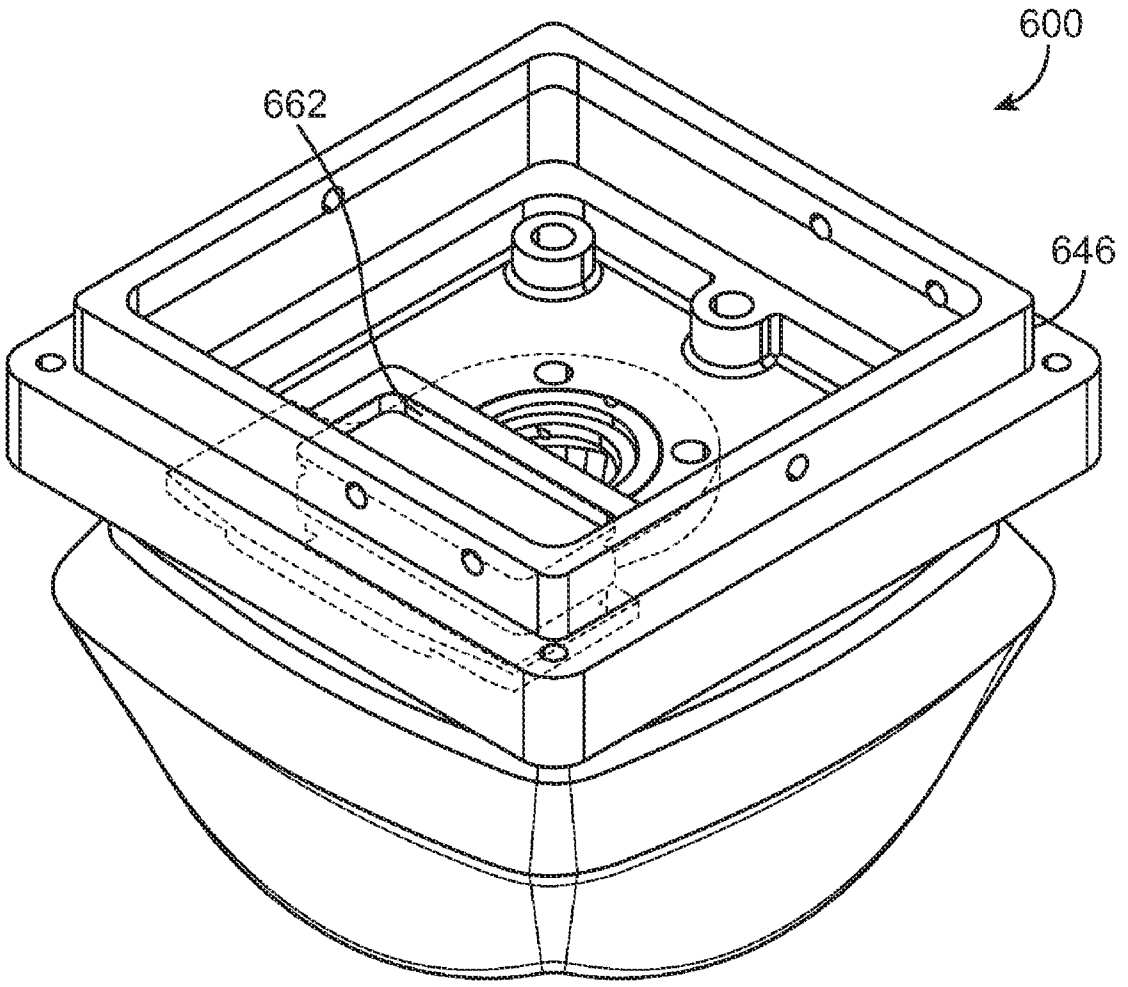

FIG. 21

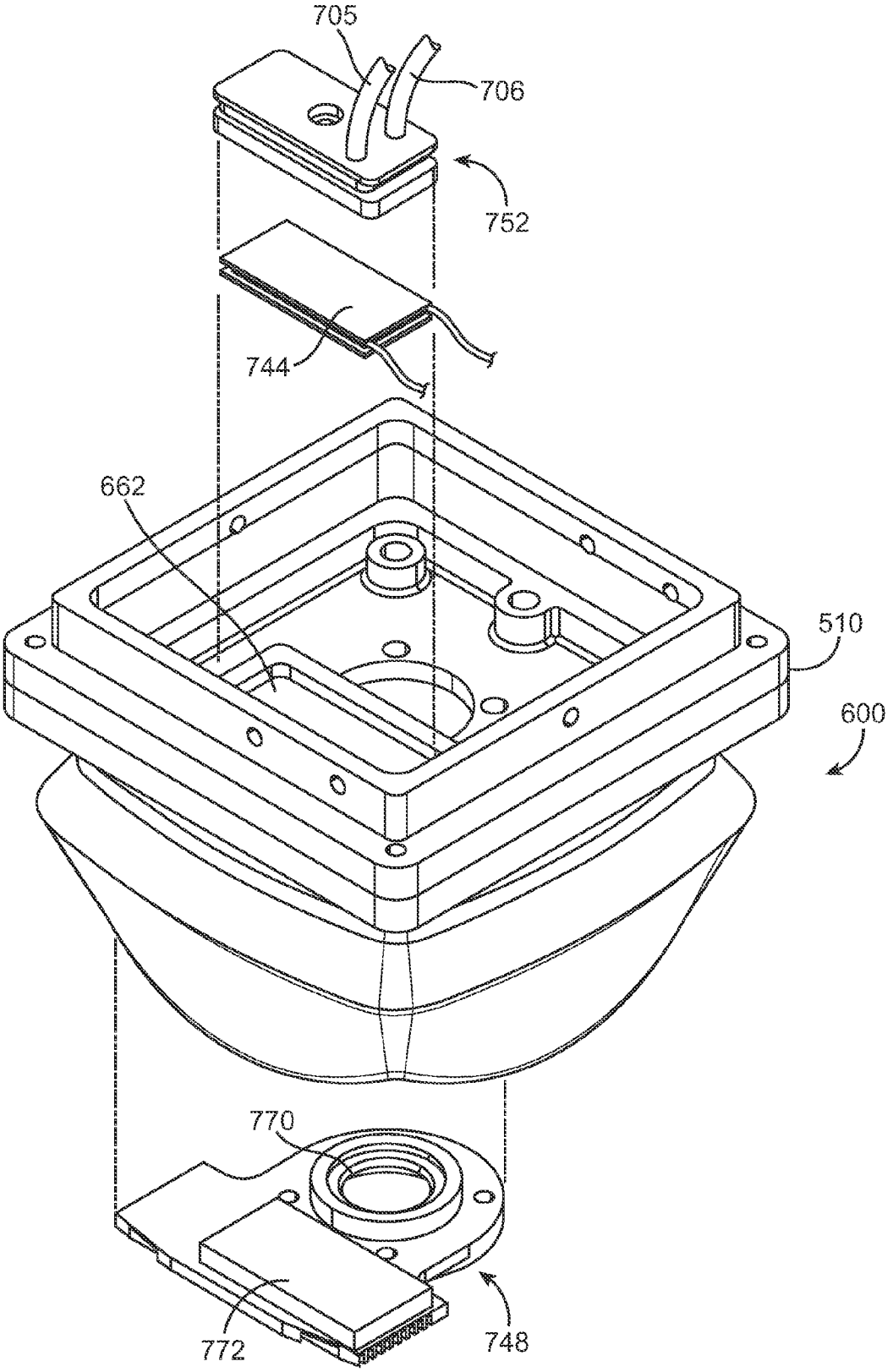

FIG. 22

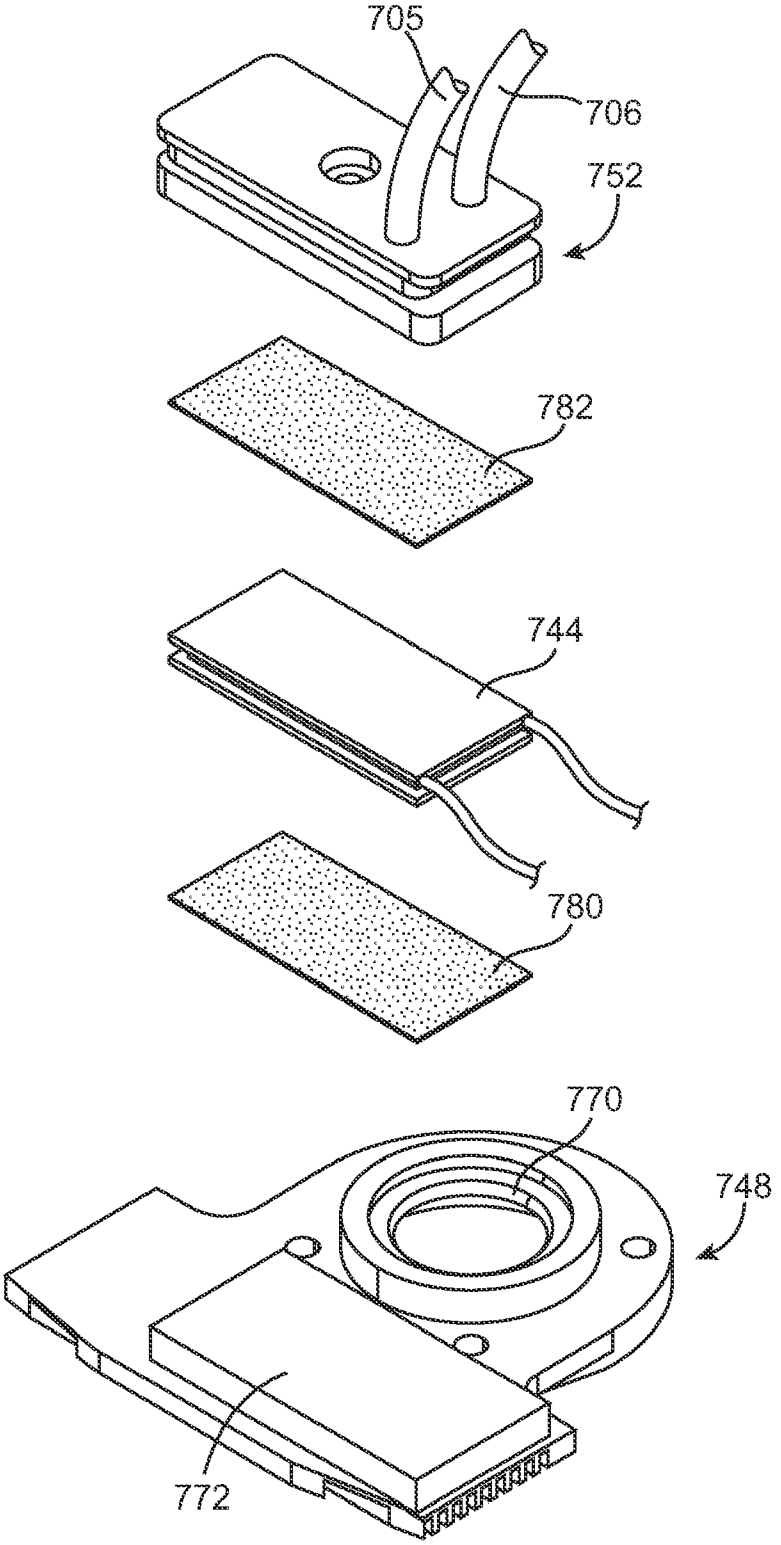

FIG. 23

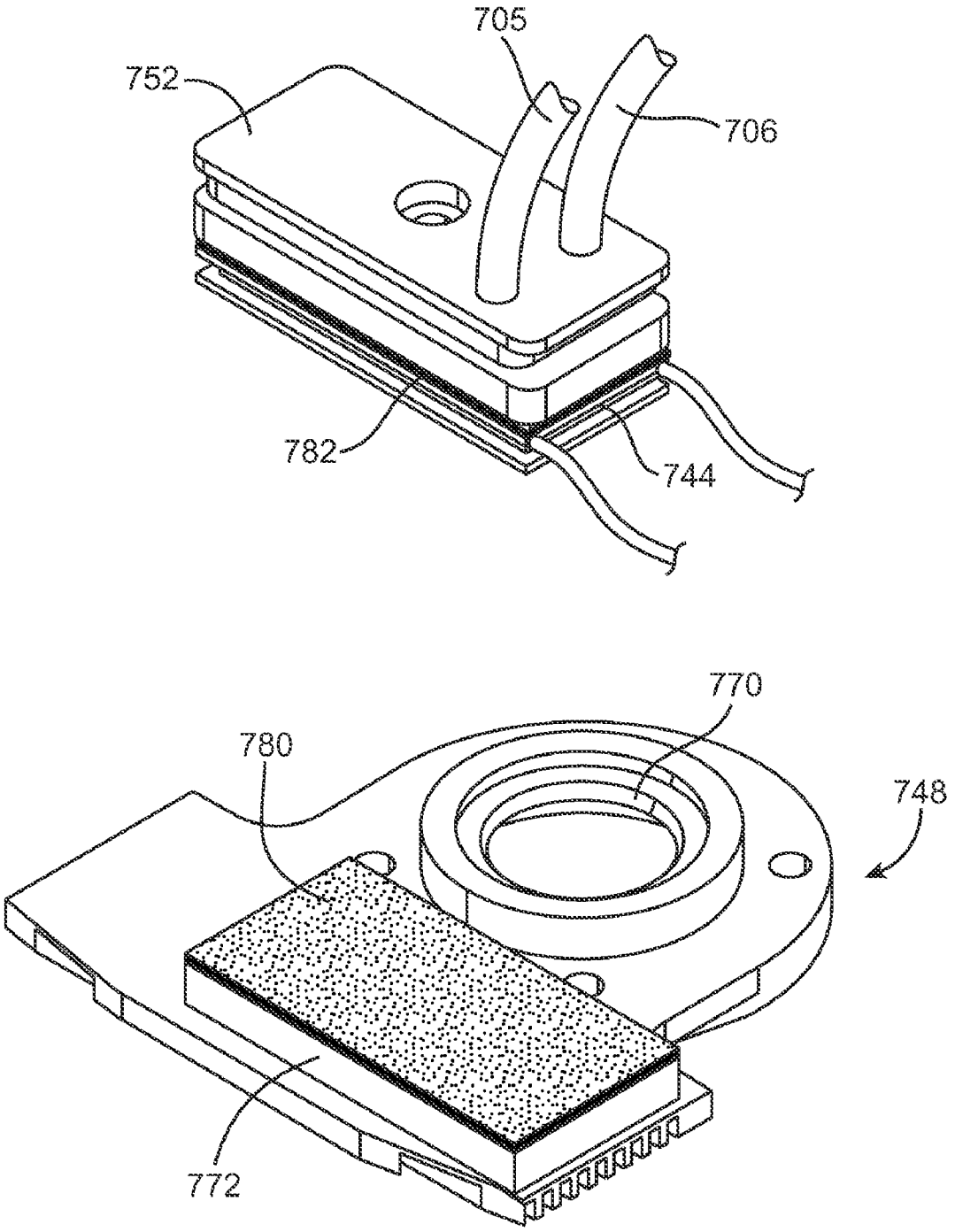

FIG. 24

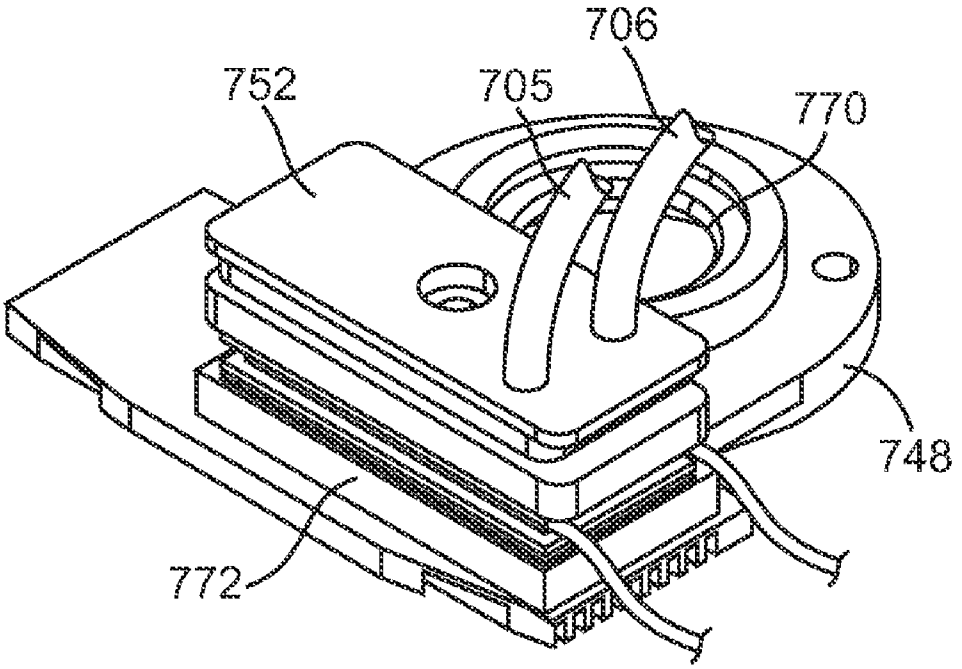

FIG. 25

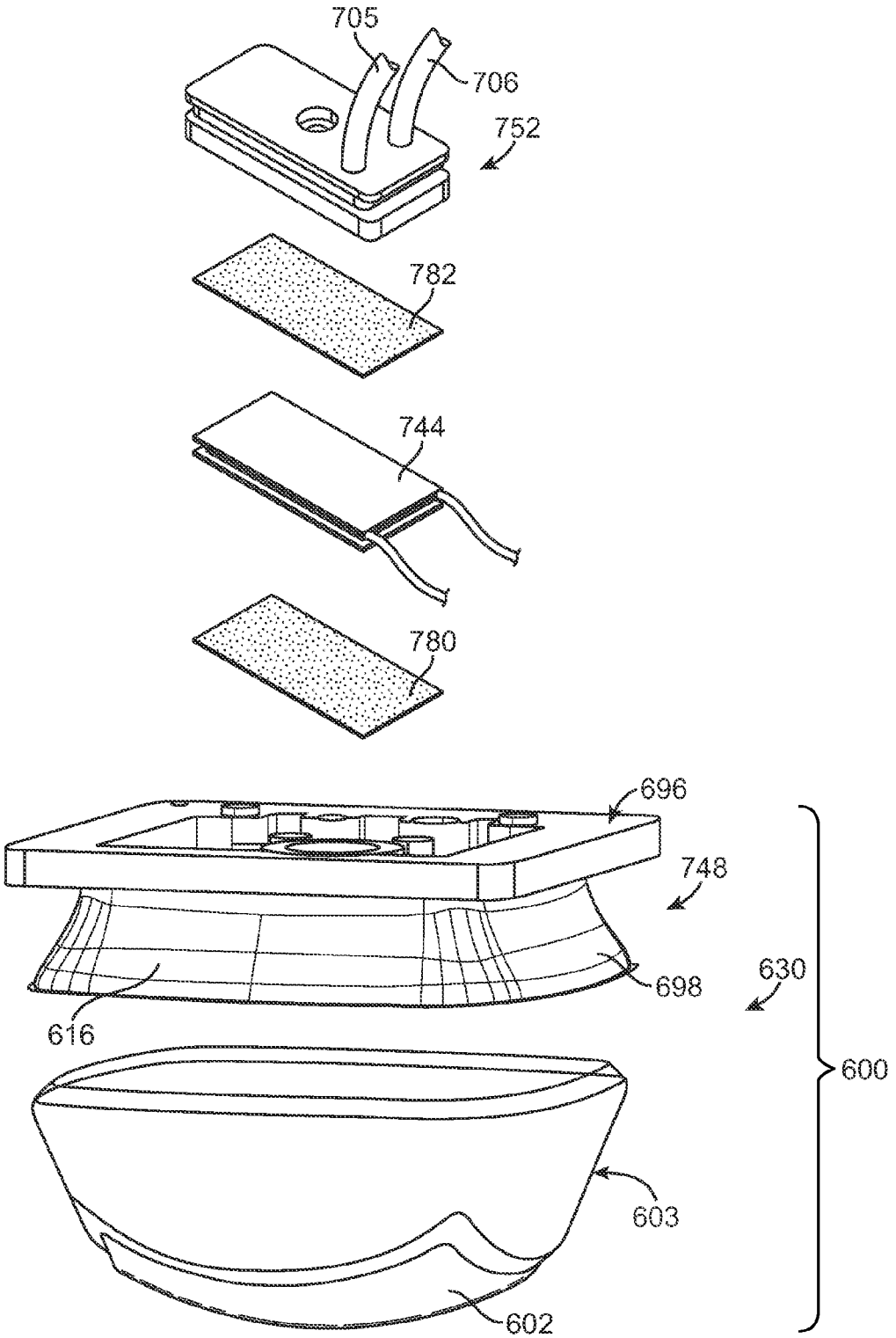

FIG. 26

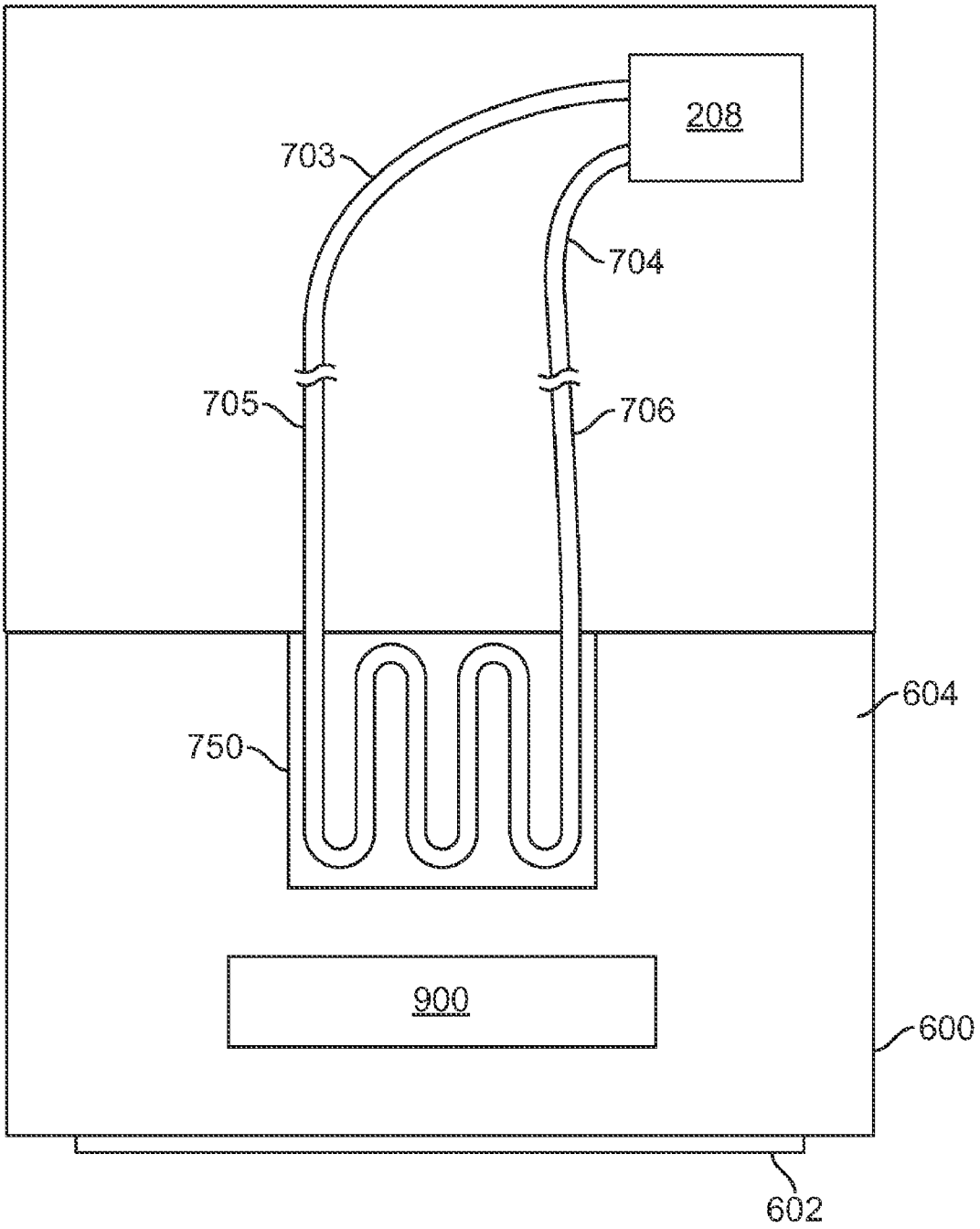

FIG. 27A

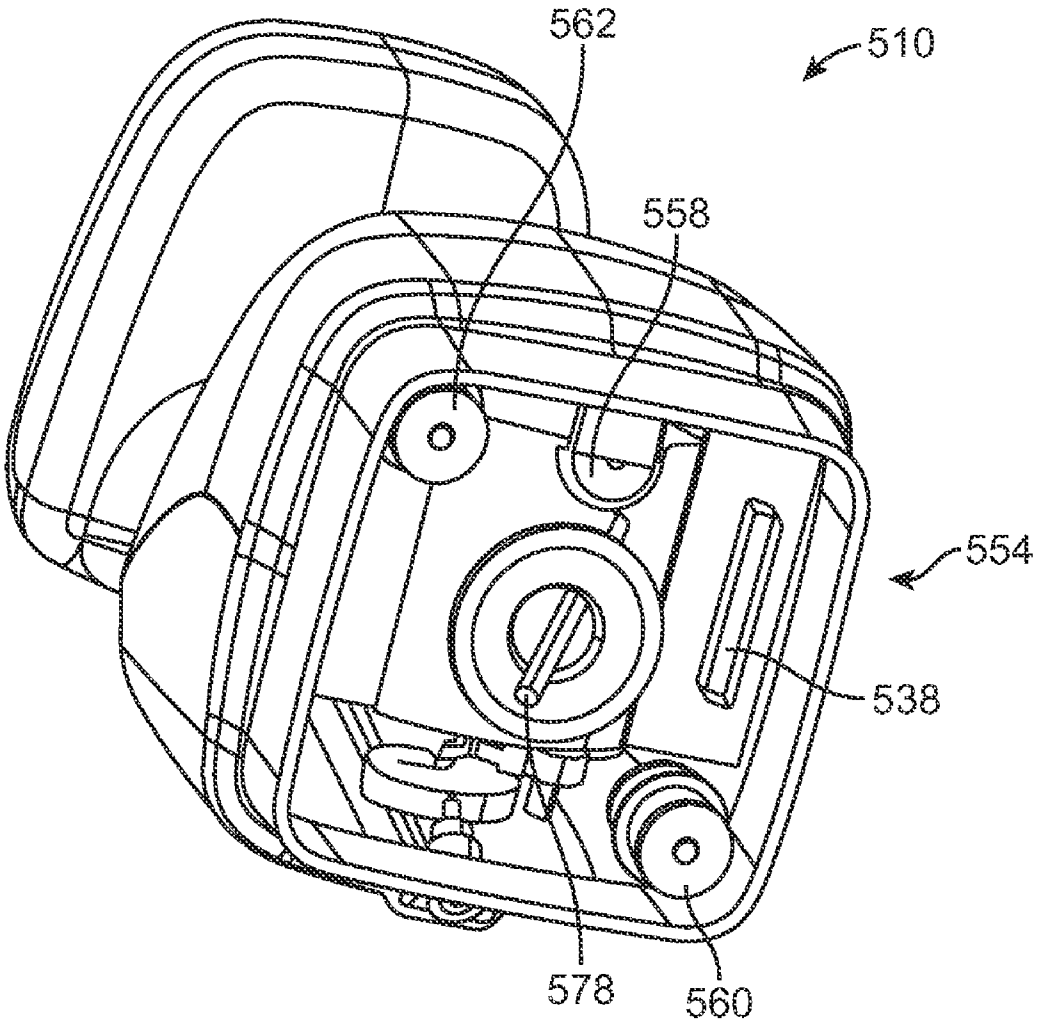

FIG. 27B

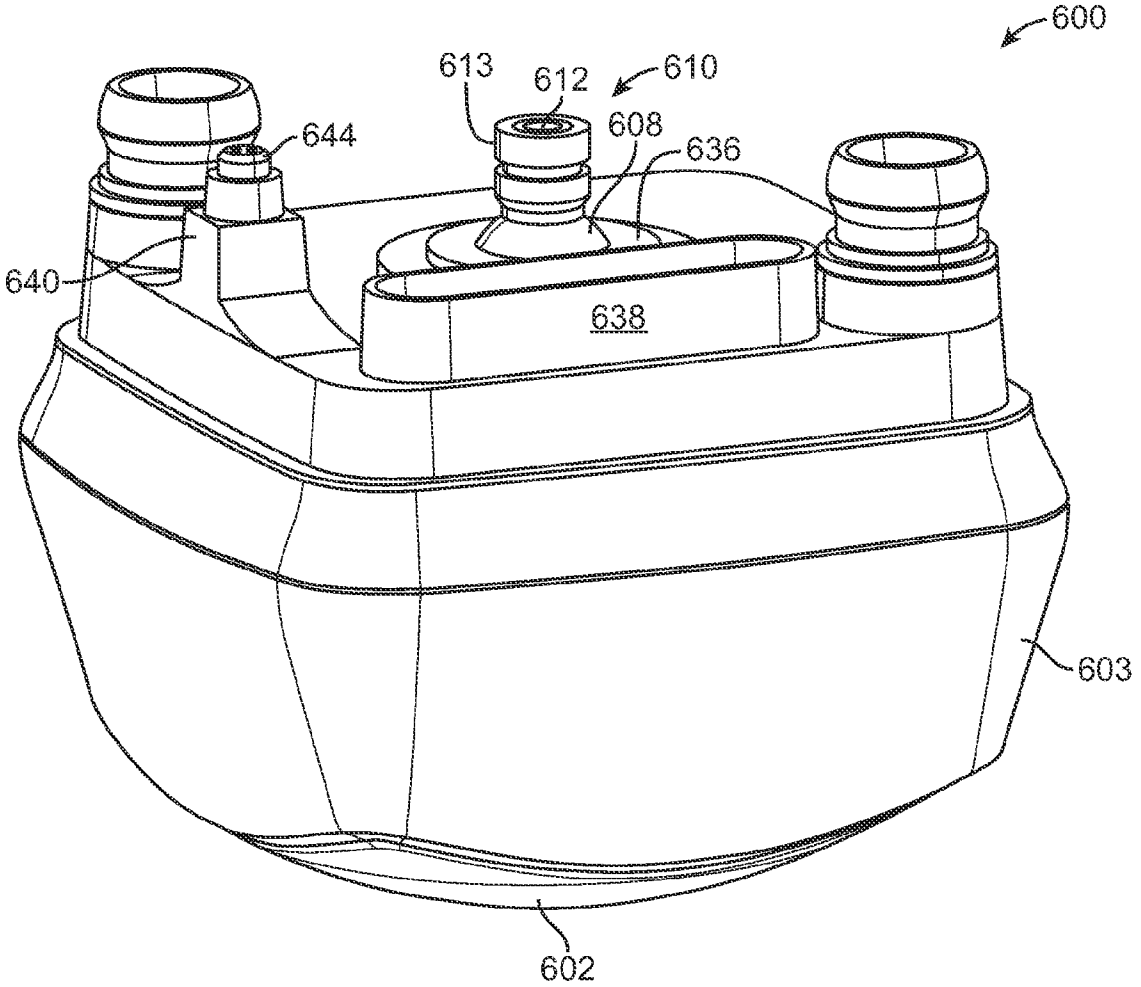

FIG. 28

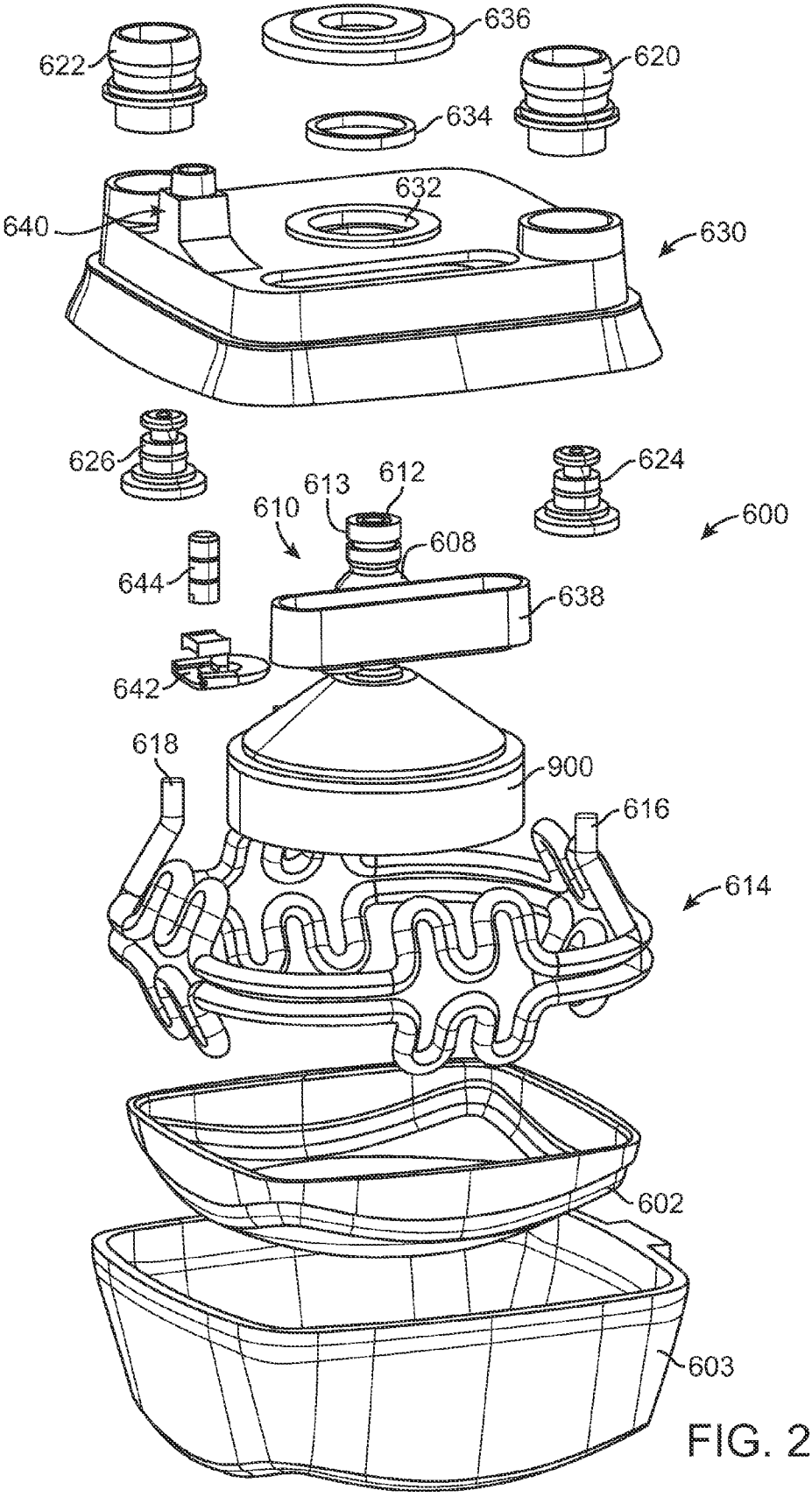
636
622
620
634
632
640
630
626
624
613
612
610
600
608
644
638
642
618
900
616
614
602
603

FIG. 29A

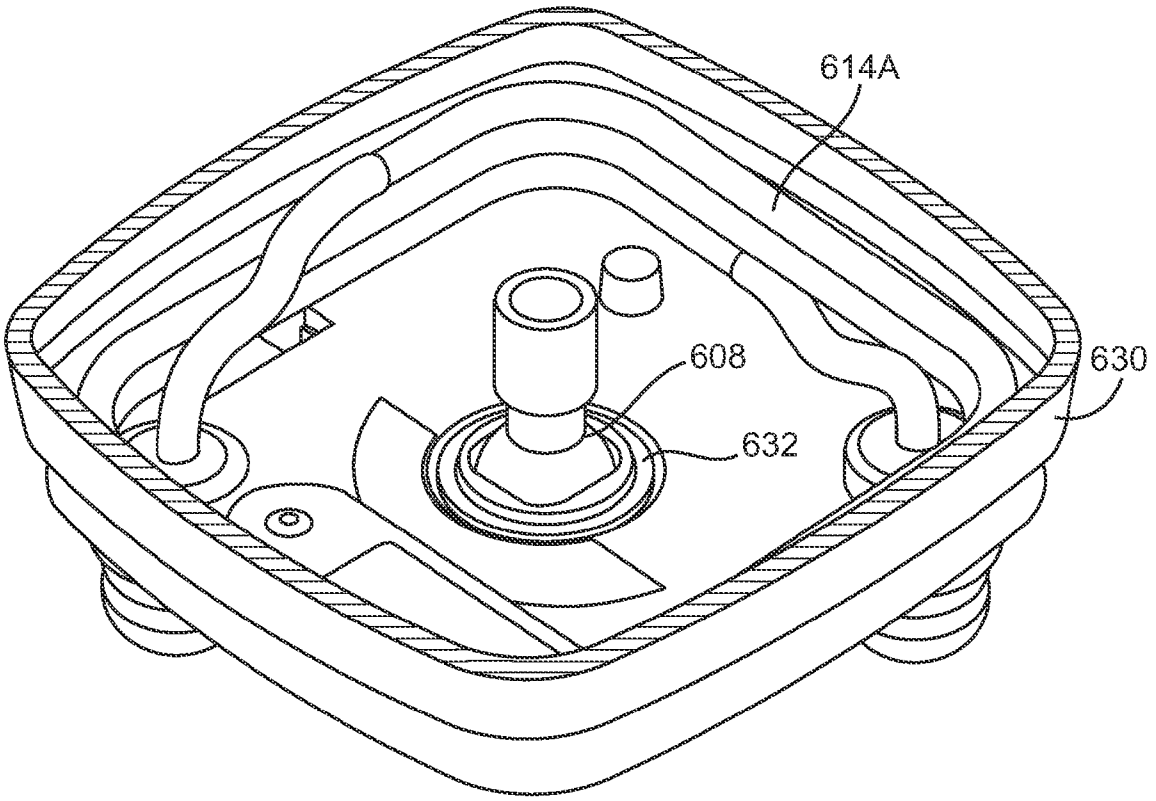

FIG. 29B

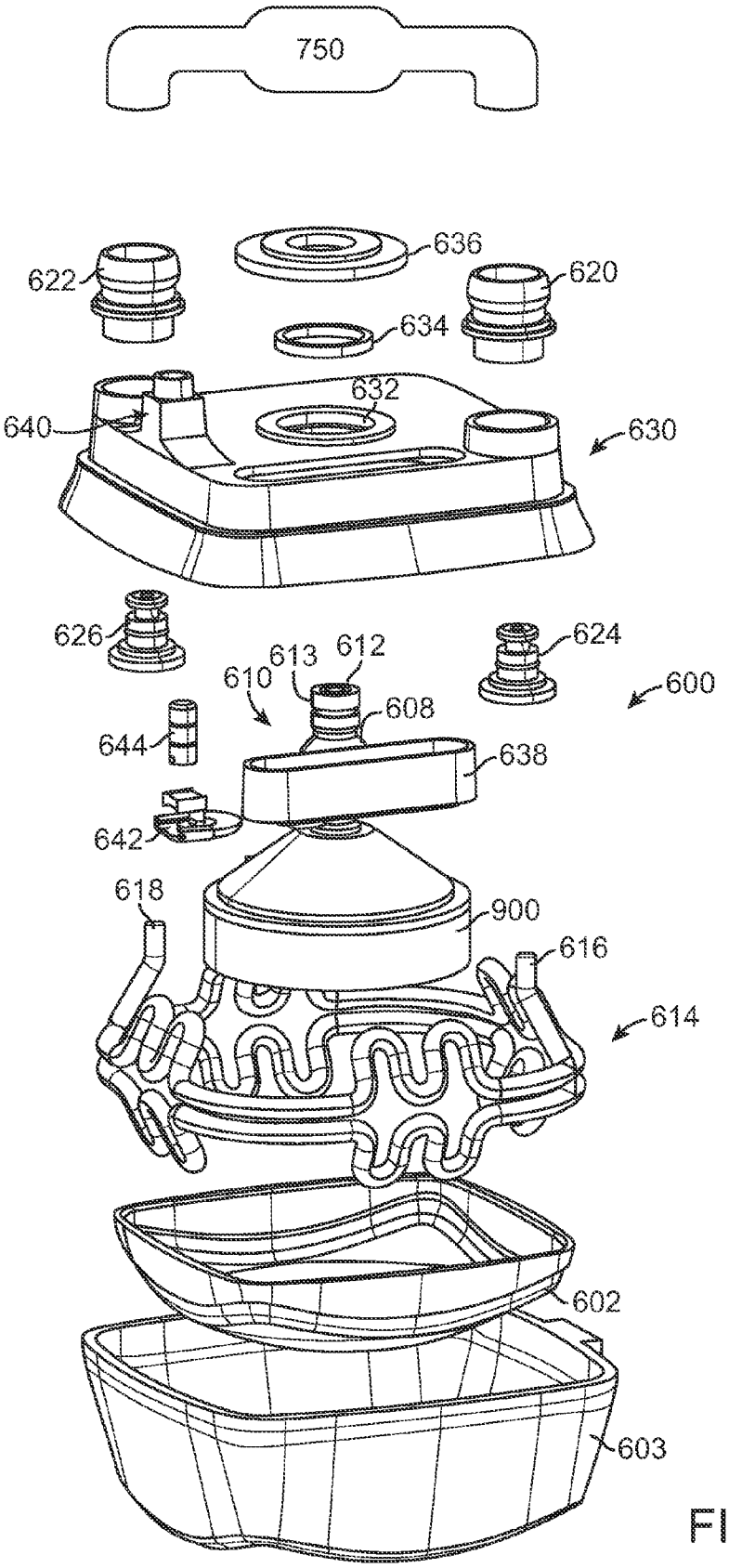
750
636
622
620
634
632
640
630
626
624
613
612
610
600
608
644
638
642
618
900
616
614
602
603

FIG. 30

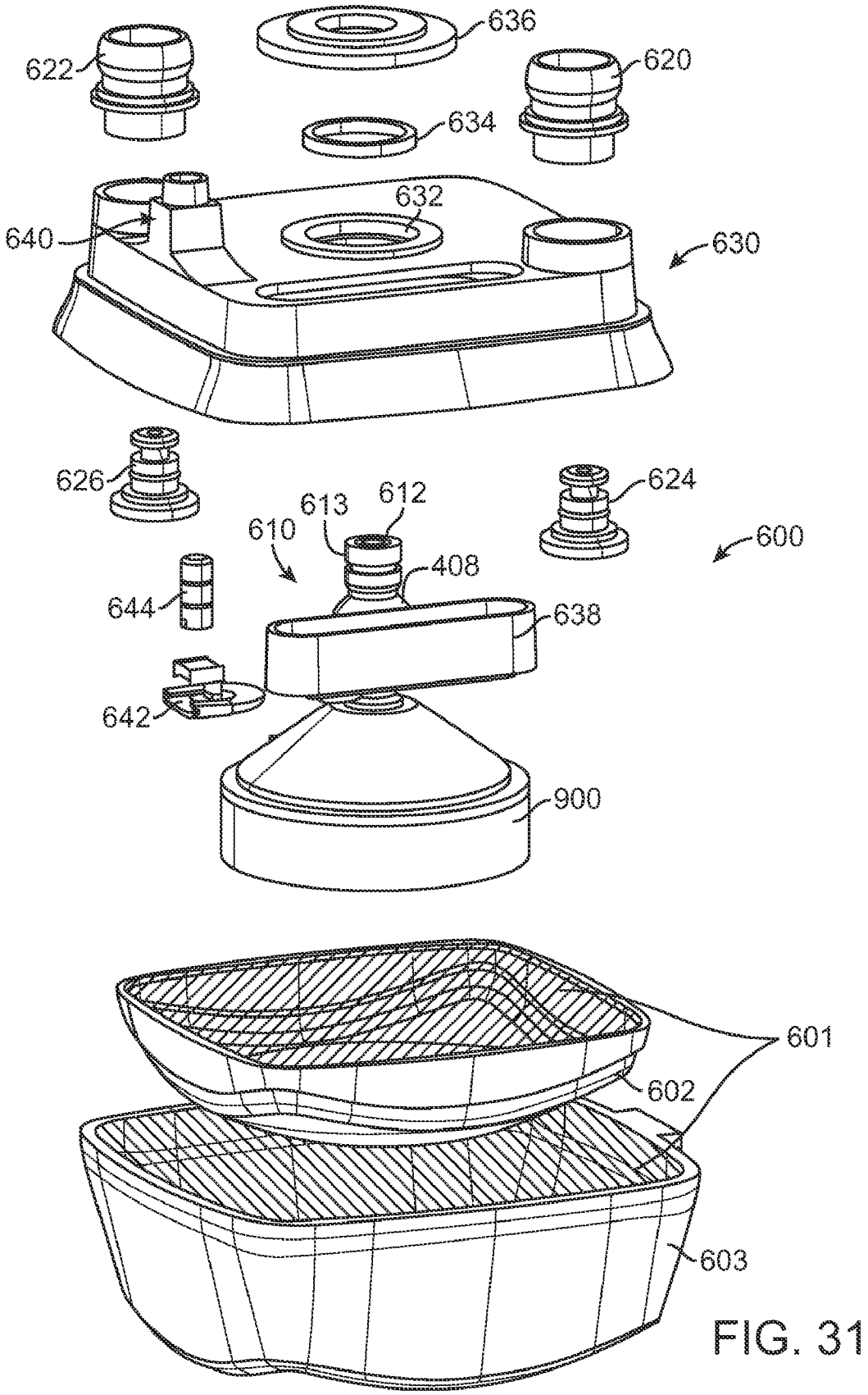
636
622
620
634
632
640
630
626
624
613
612
610
600
408
644
638
642
900
601
602
603

FIG. 31

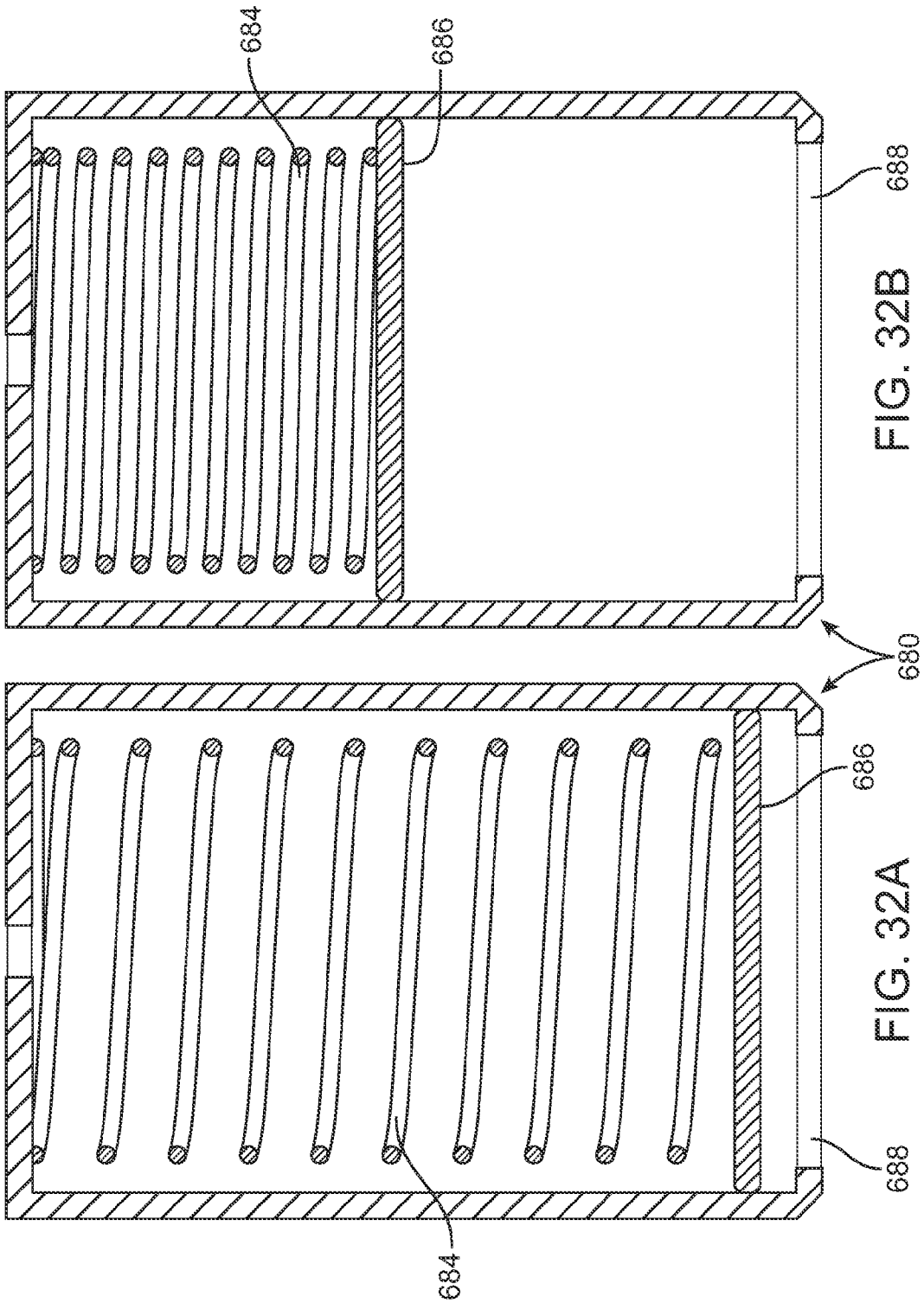

FIG. 32B

FIG. 32A

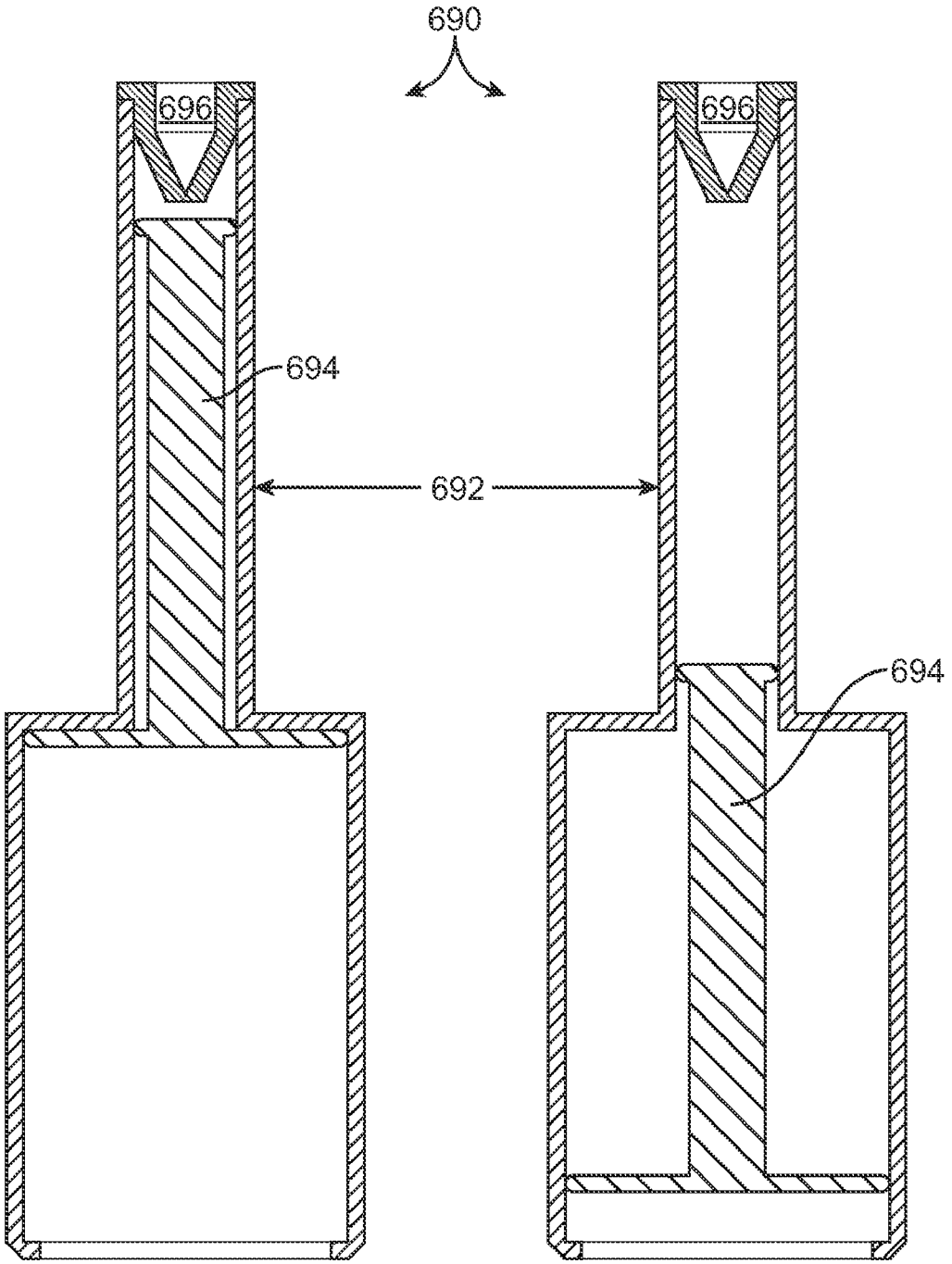

FIG. 33A FIG. 33B

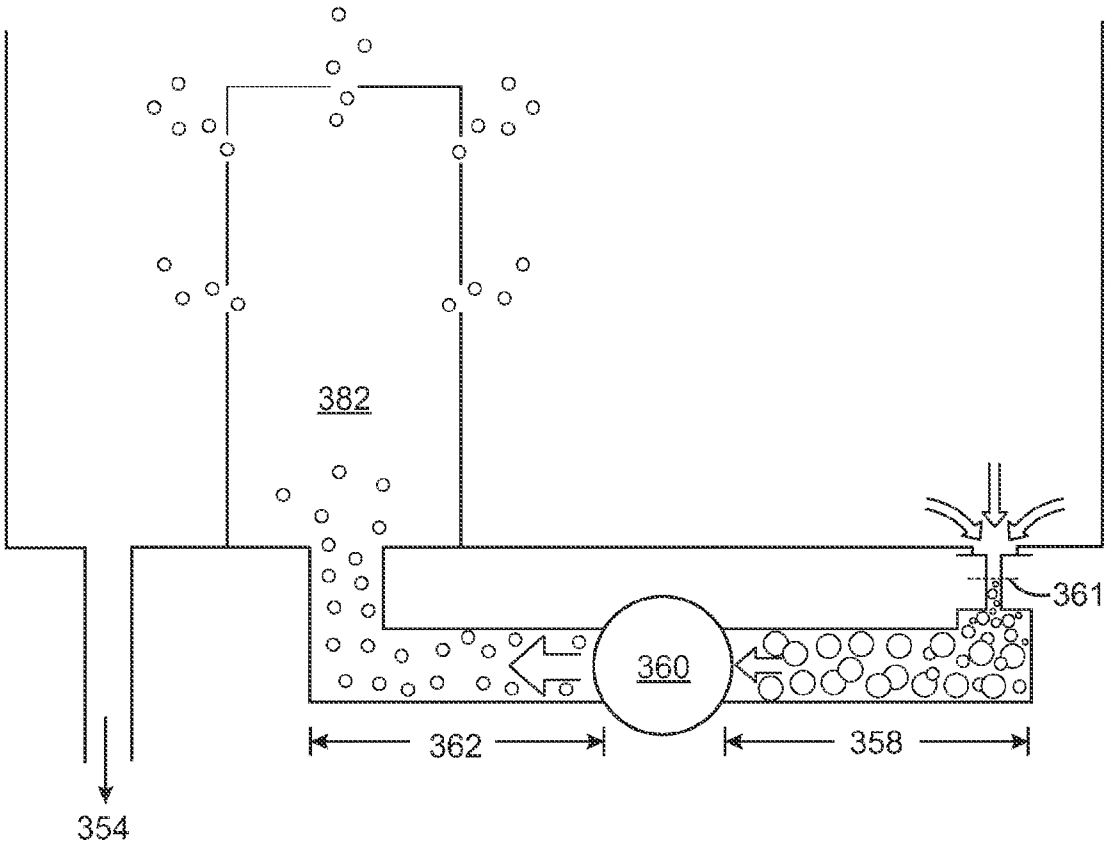

FIG. 34

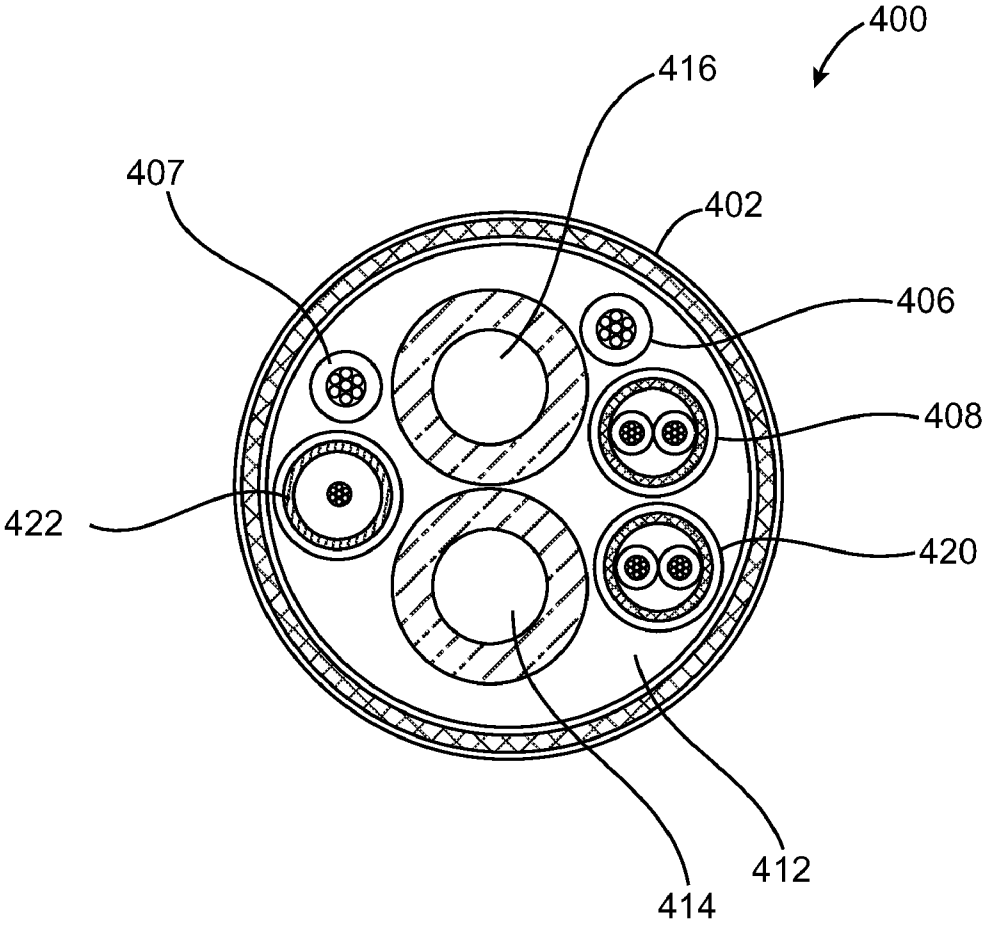

FIG. 35

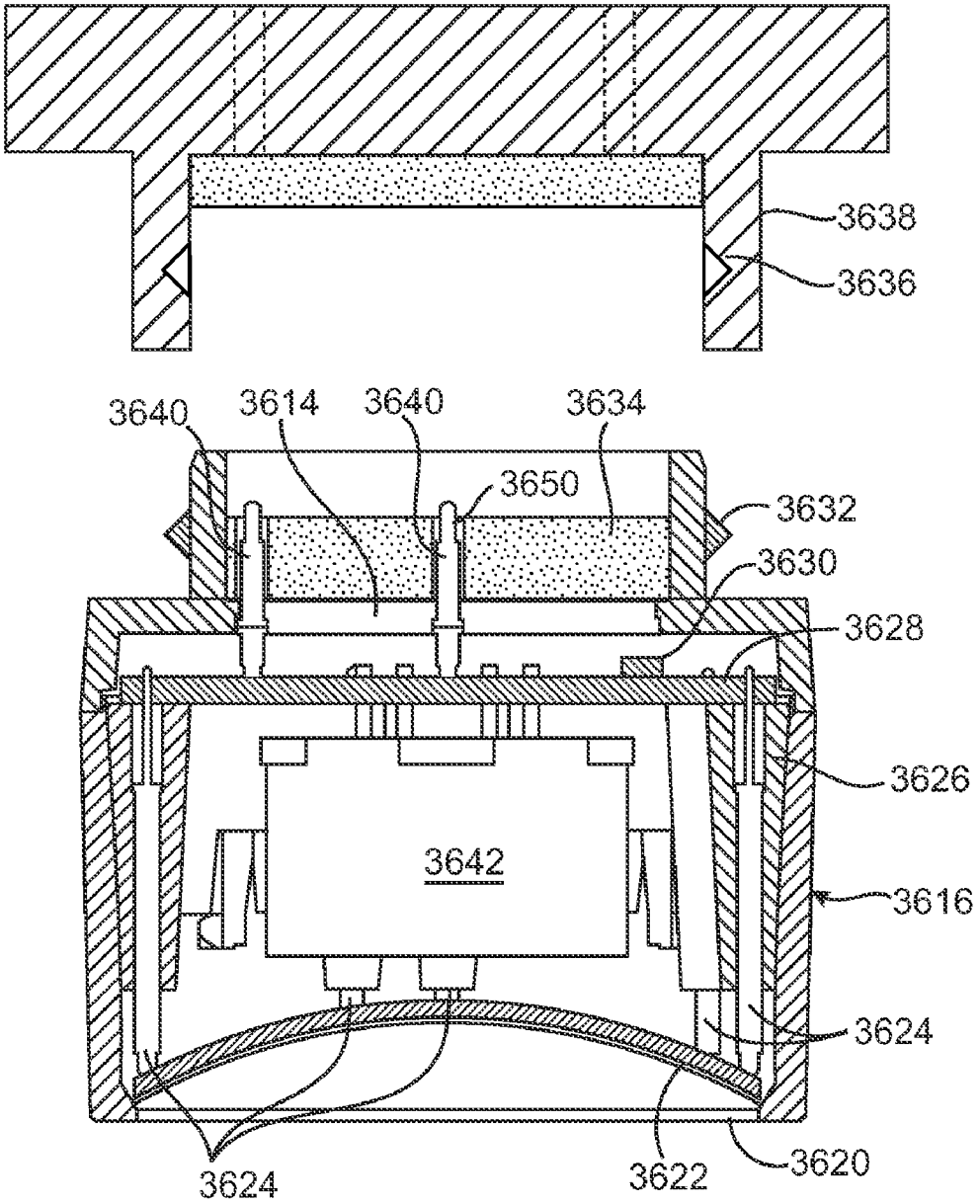
3638
3636
3640
3614
3640
3634
3650
3632
3630
3628
3626
3642
3616
3624
3624
3622
3620

FIG. 36A

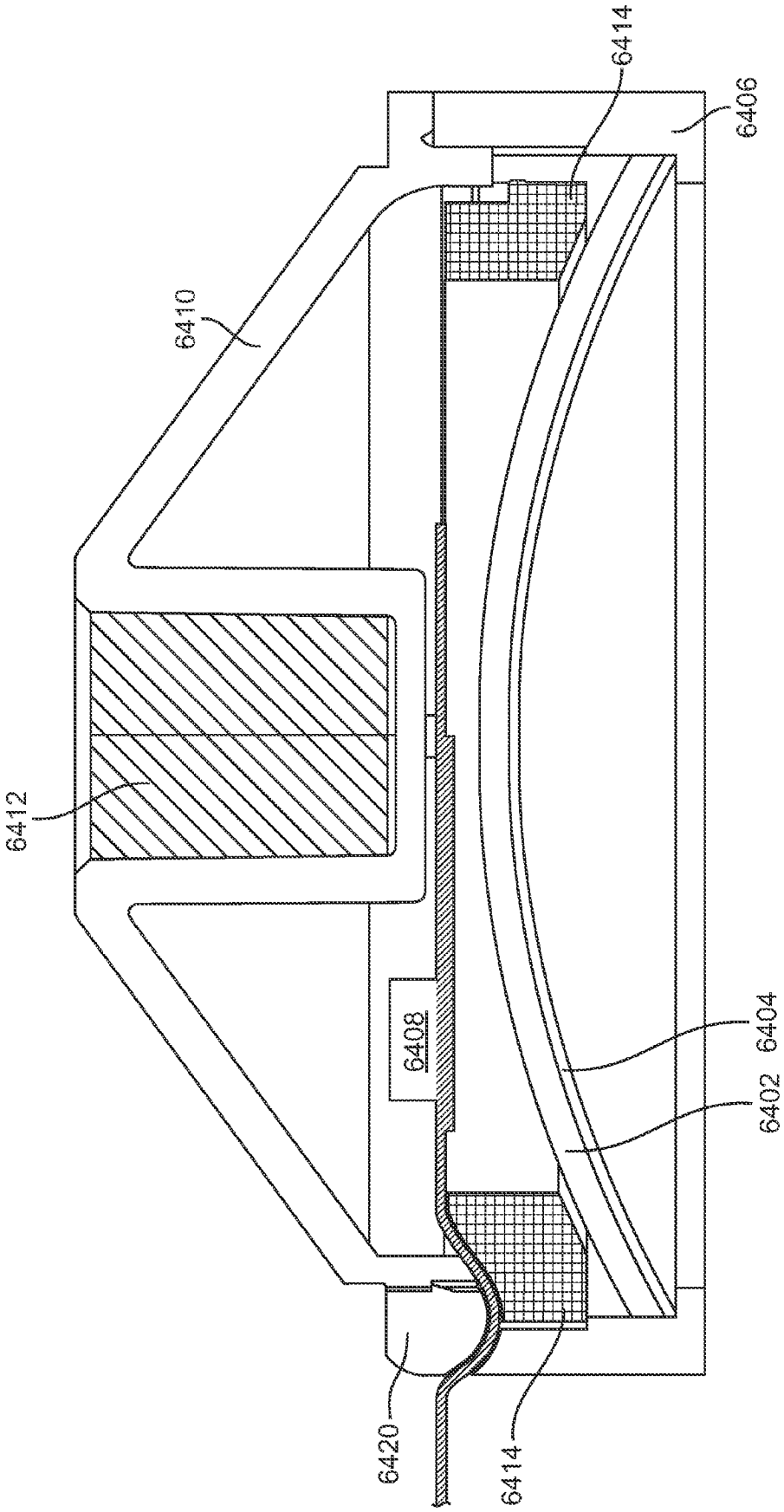

FIG. 36B

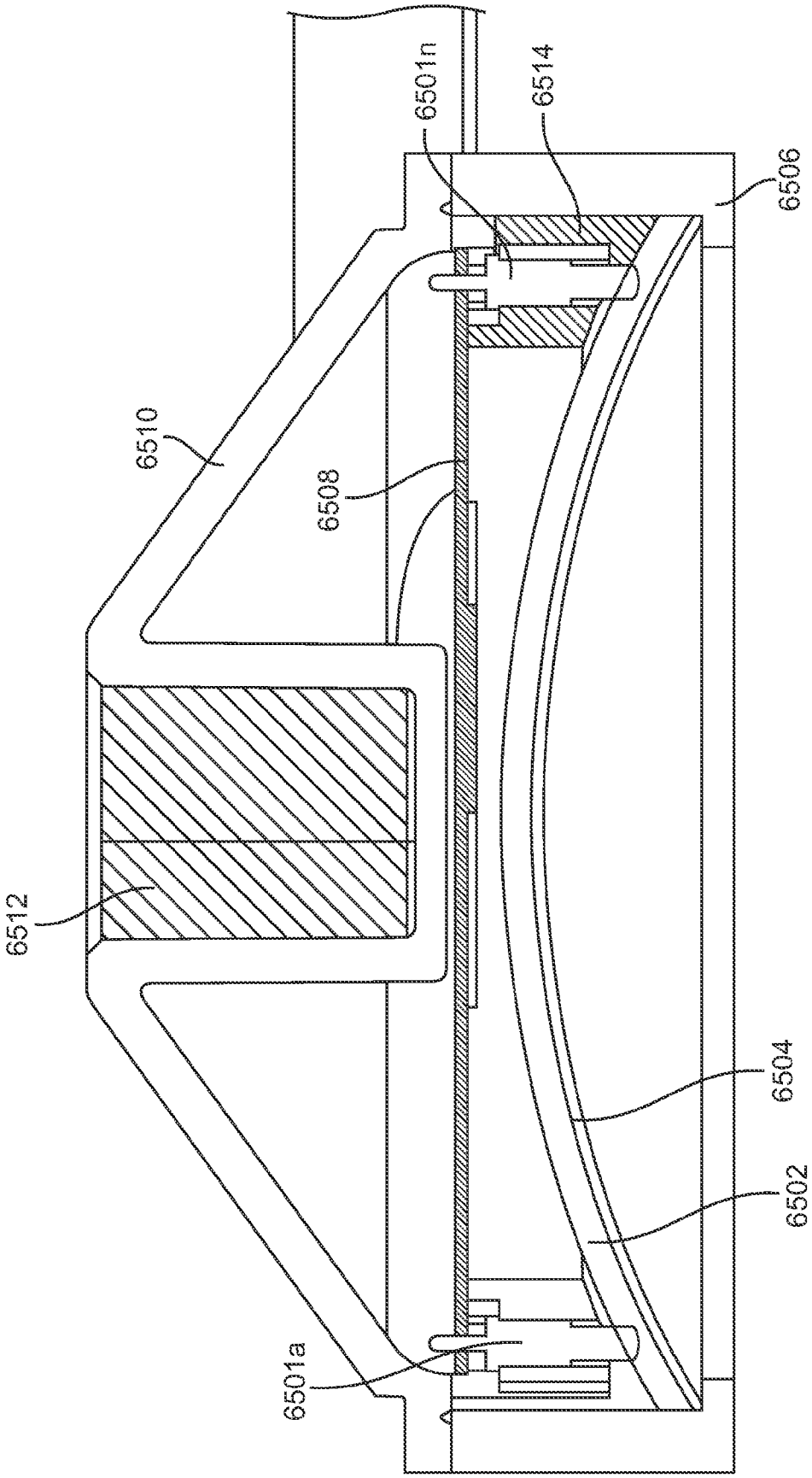

FIG. 36C

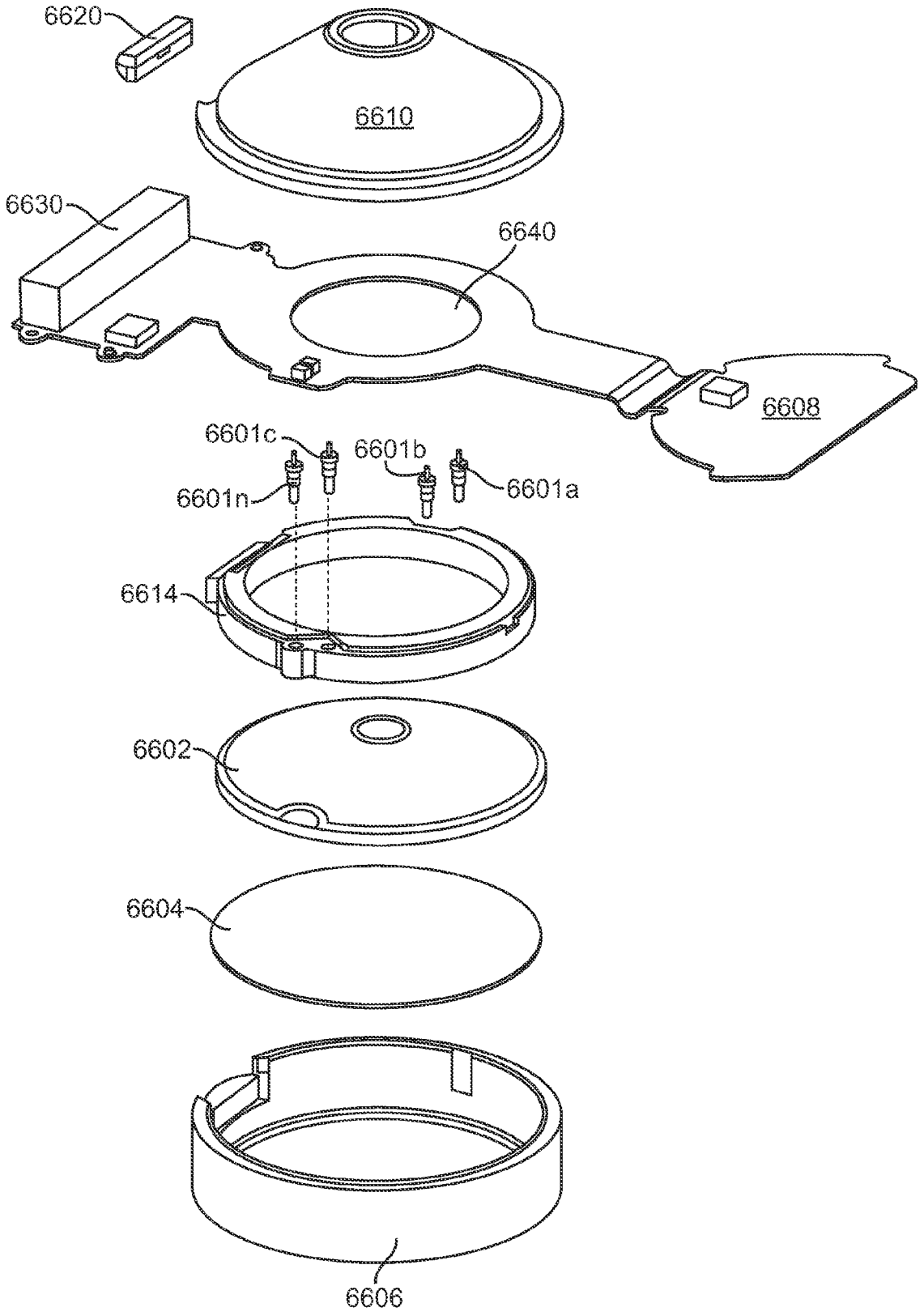
6620
6610
6630
6640
6608
6601c
6601b
6601n
6601a
6614
6602
6604
6606

FIG. 36D

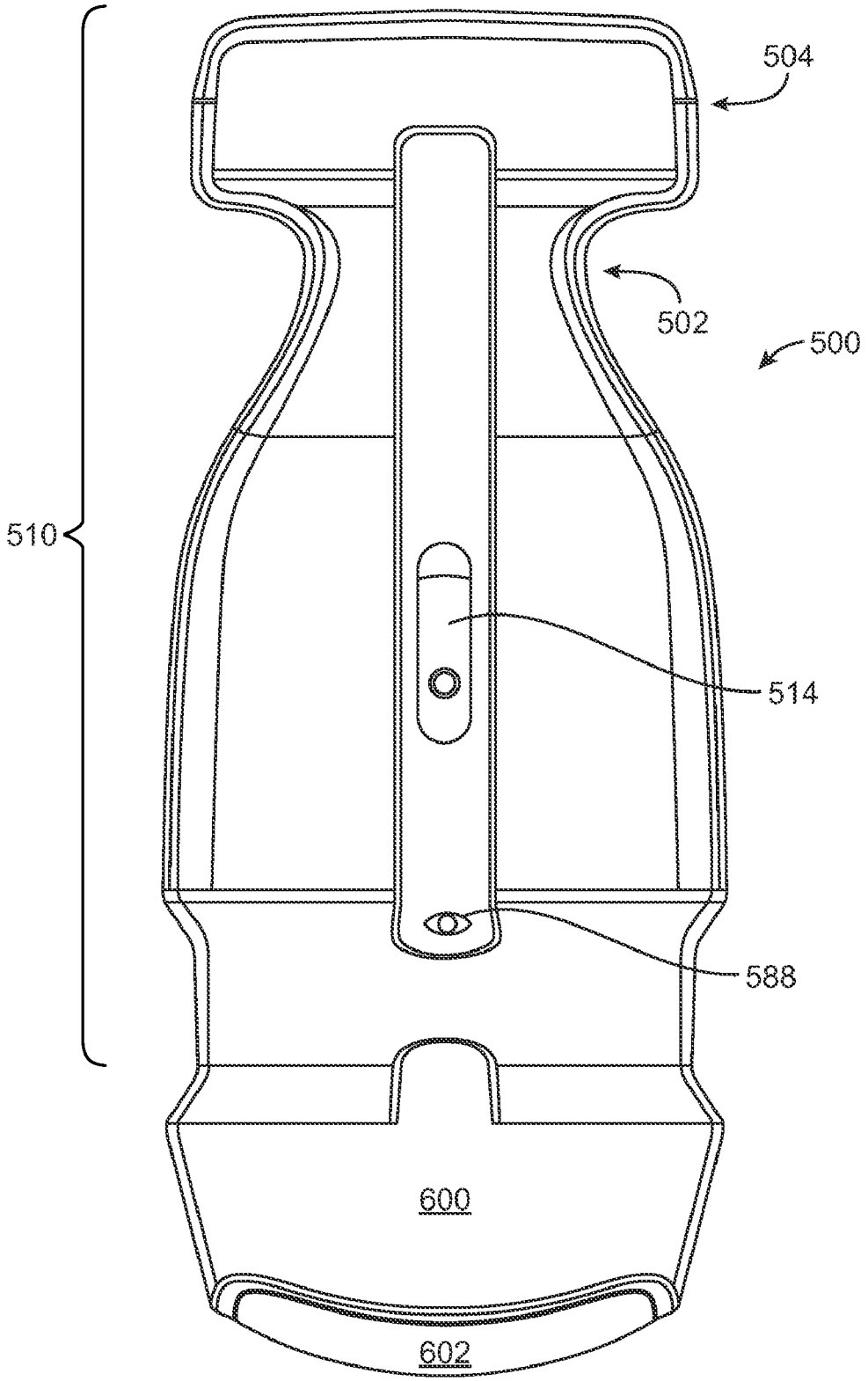

FIG. 37

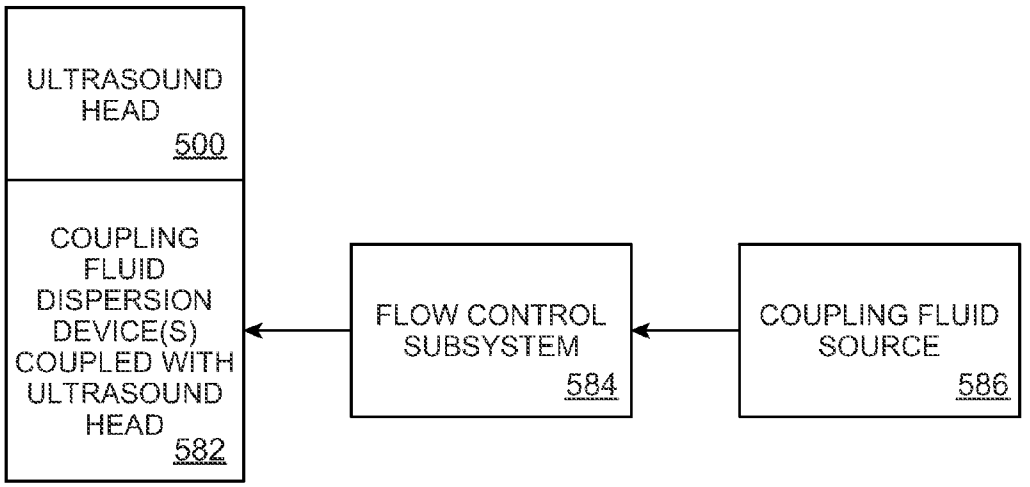
ULTRASOUND HEAD
500
COUPLING FLUID DISPERSION DEVICE(S) COUPLED WITH ULTRASOUND HEAD
582
FLOW CONTROL SUBSYSTEM
584
COUPLING FLUID SOURCE
586

FIG. 38

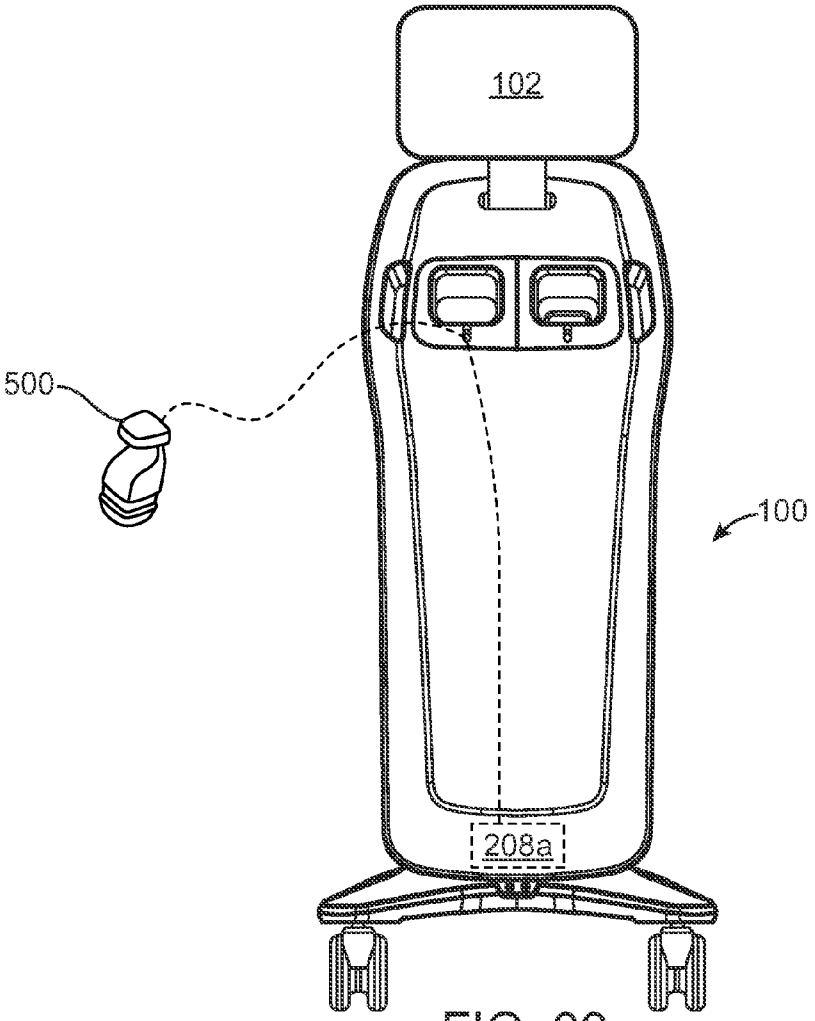
102
500
100
208a

FIG. 39

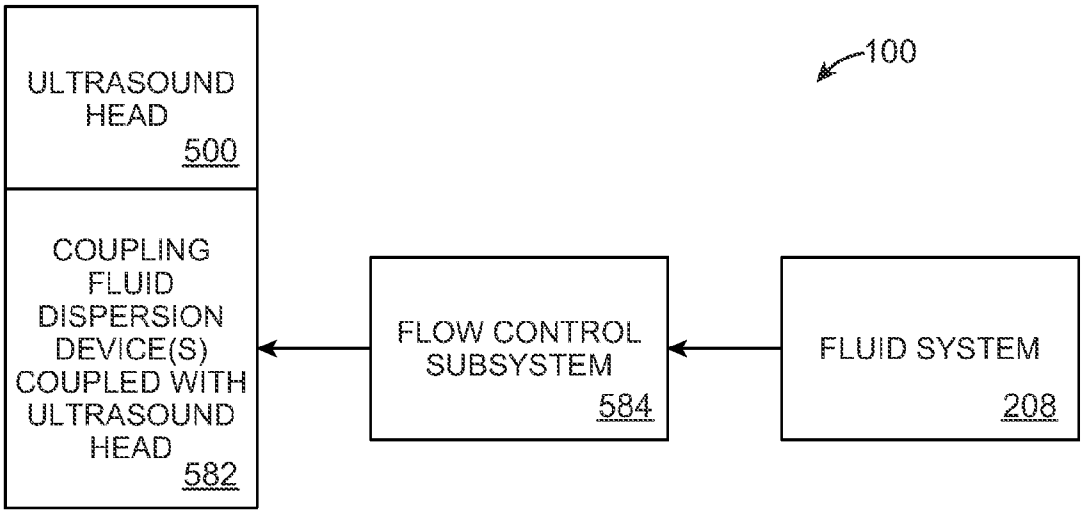
100
ULTRASOUND HEAD
500
COUPLING FLUID DISPERSION DEVICE(S) COUPLED WITH ULTRASOUND HEAD
582
FLOW CONTROL SUBSYSTEM
584
FLUID SYSTEM
208

FIG. 40

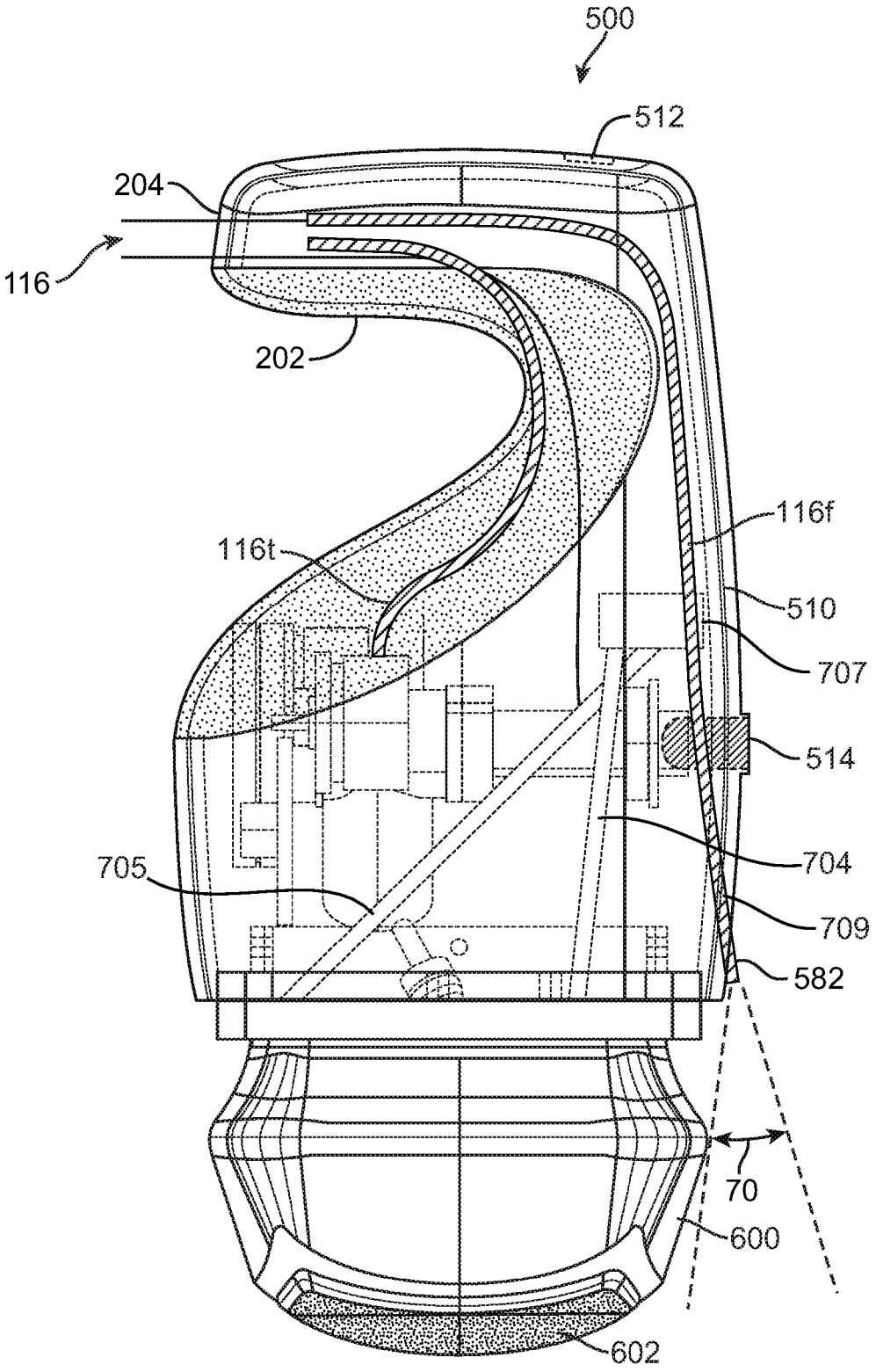
500
512
204
116
202
116f
116t
510
707
514
704
705
709
582
70
600
602

FIG. 41

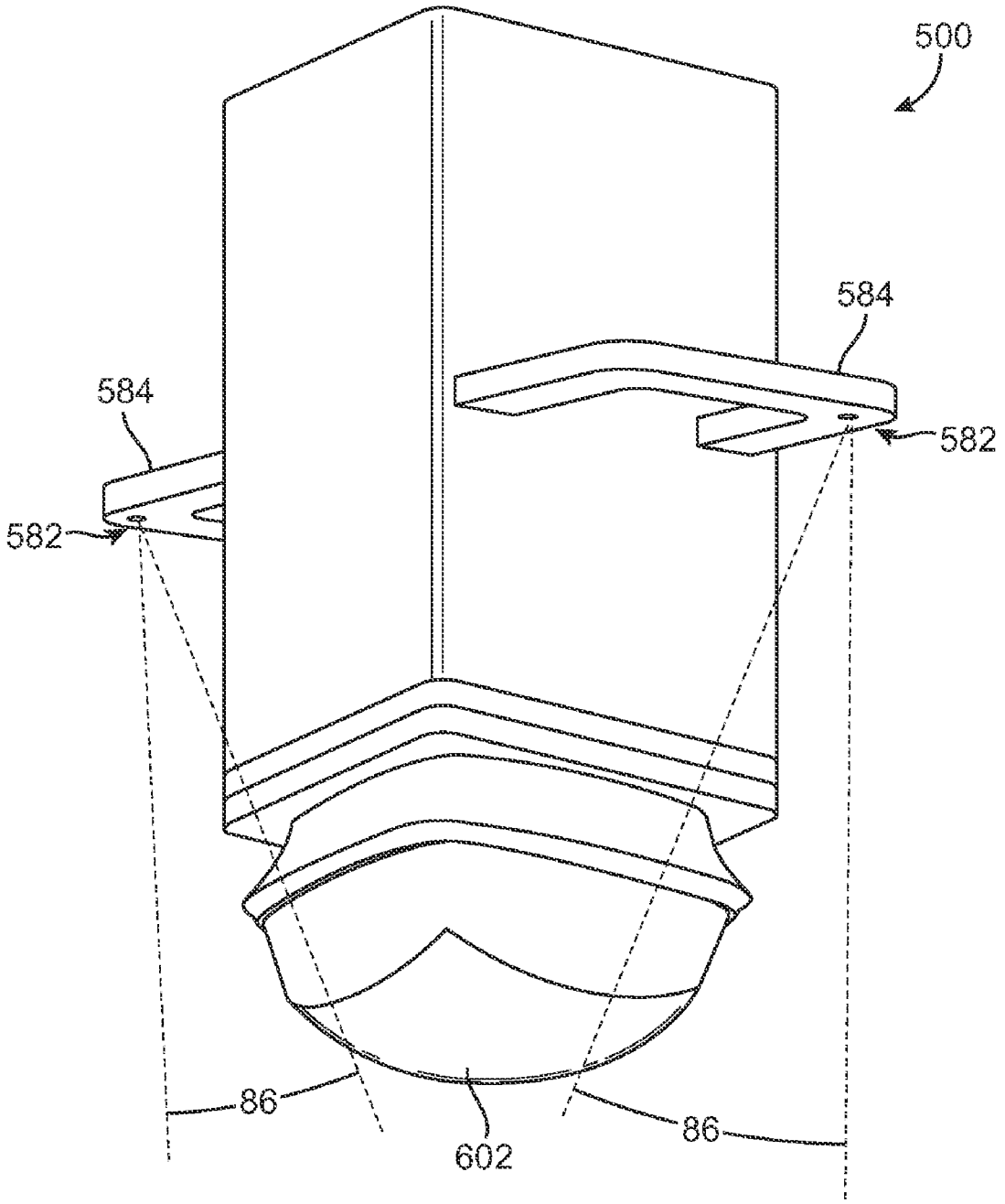

FIG. 42

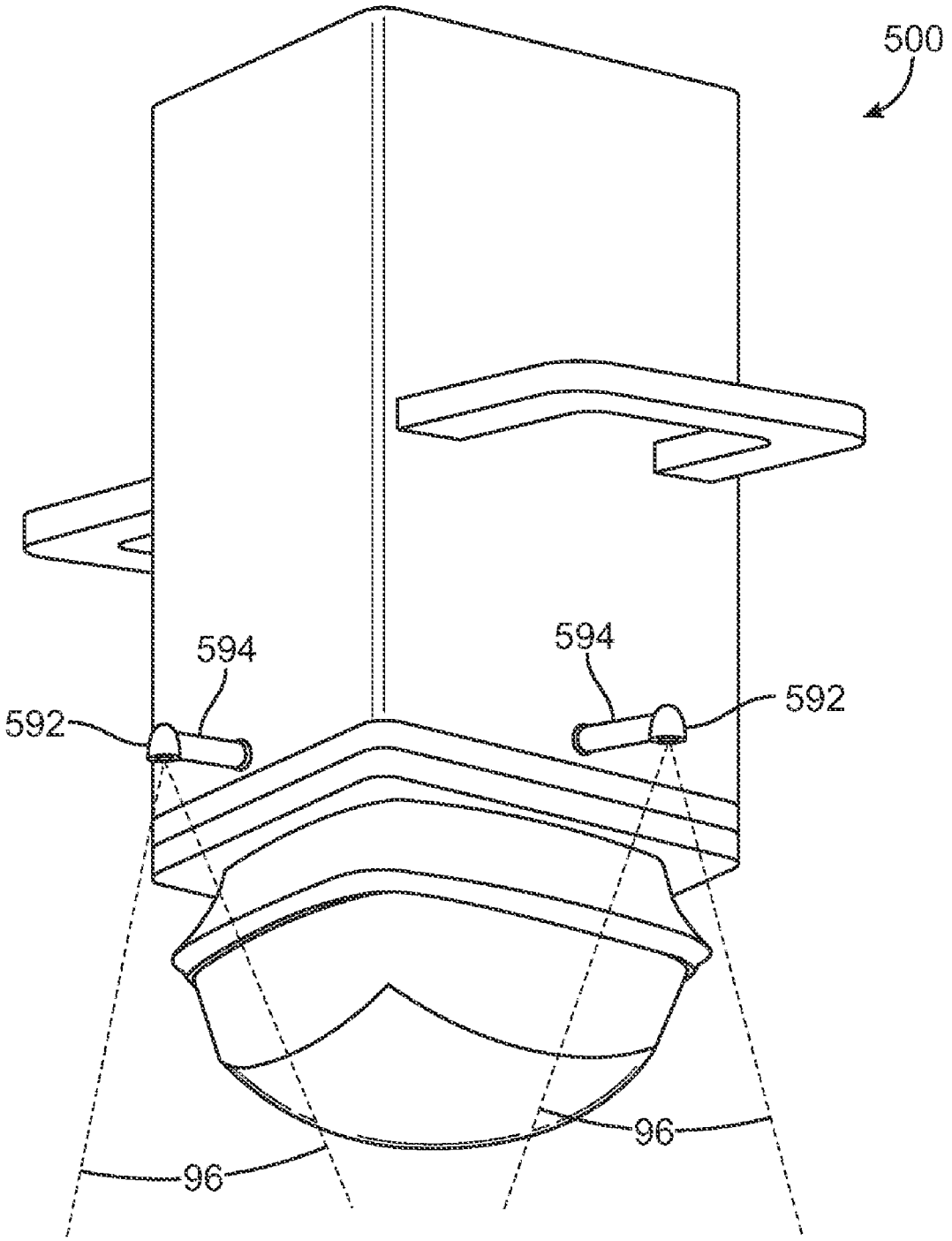

FIG. 43

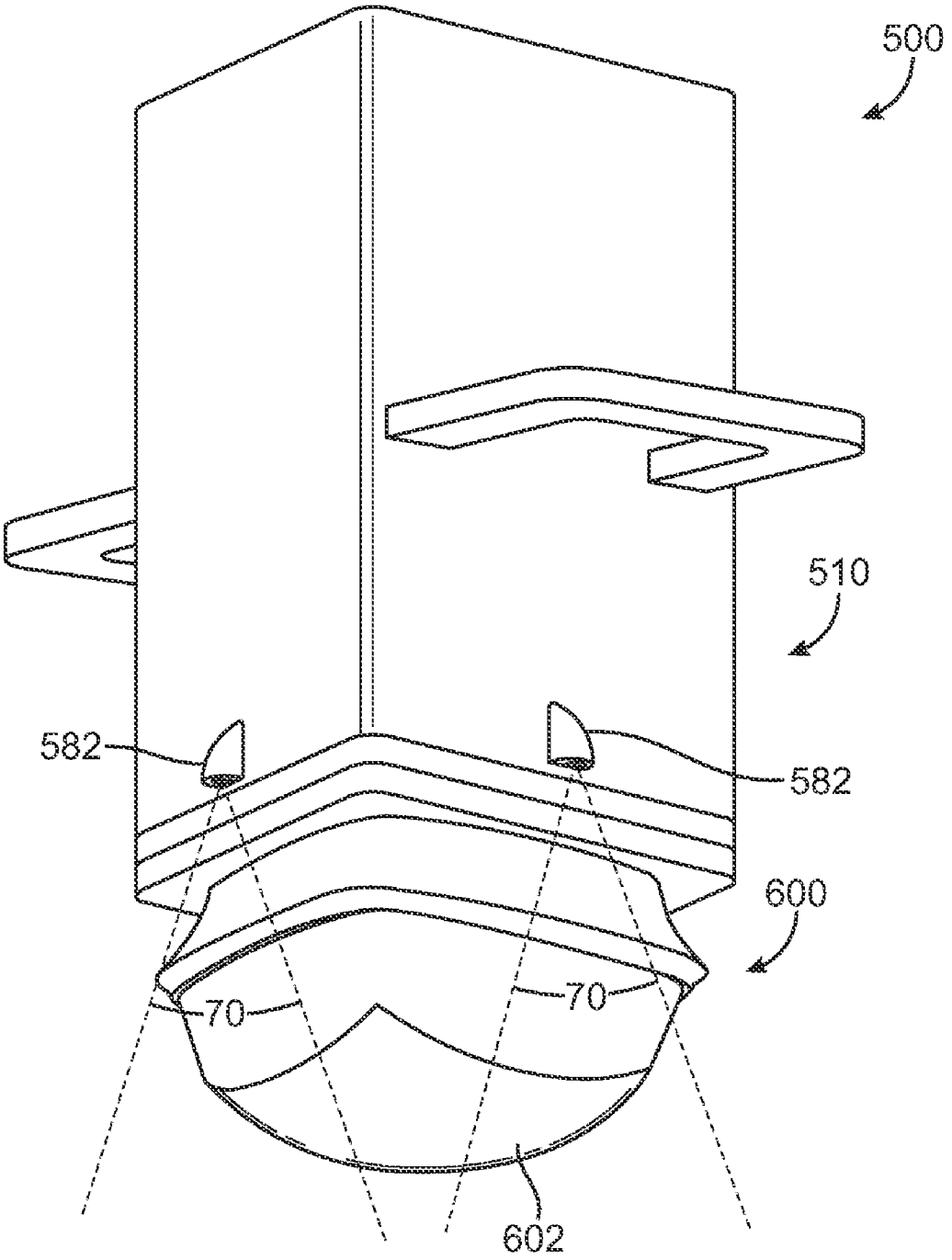

FIG. 44A

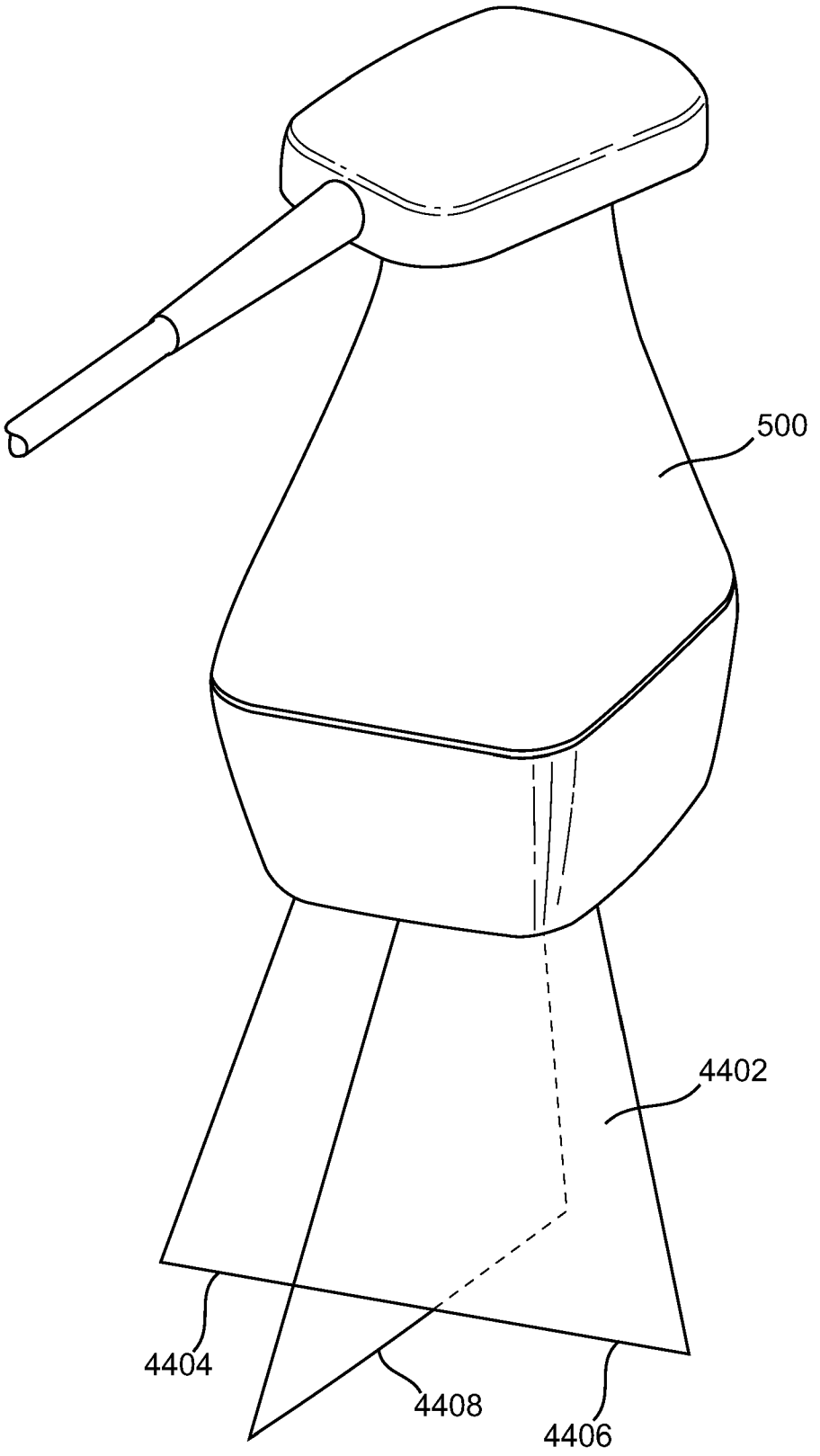

FIG. 44B

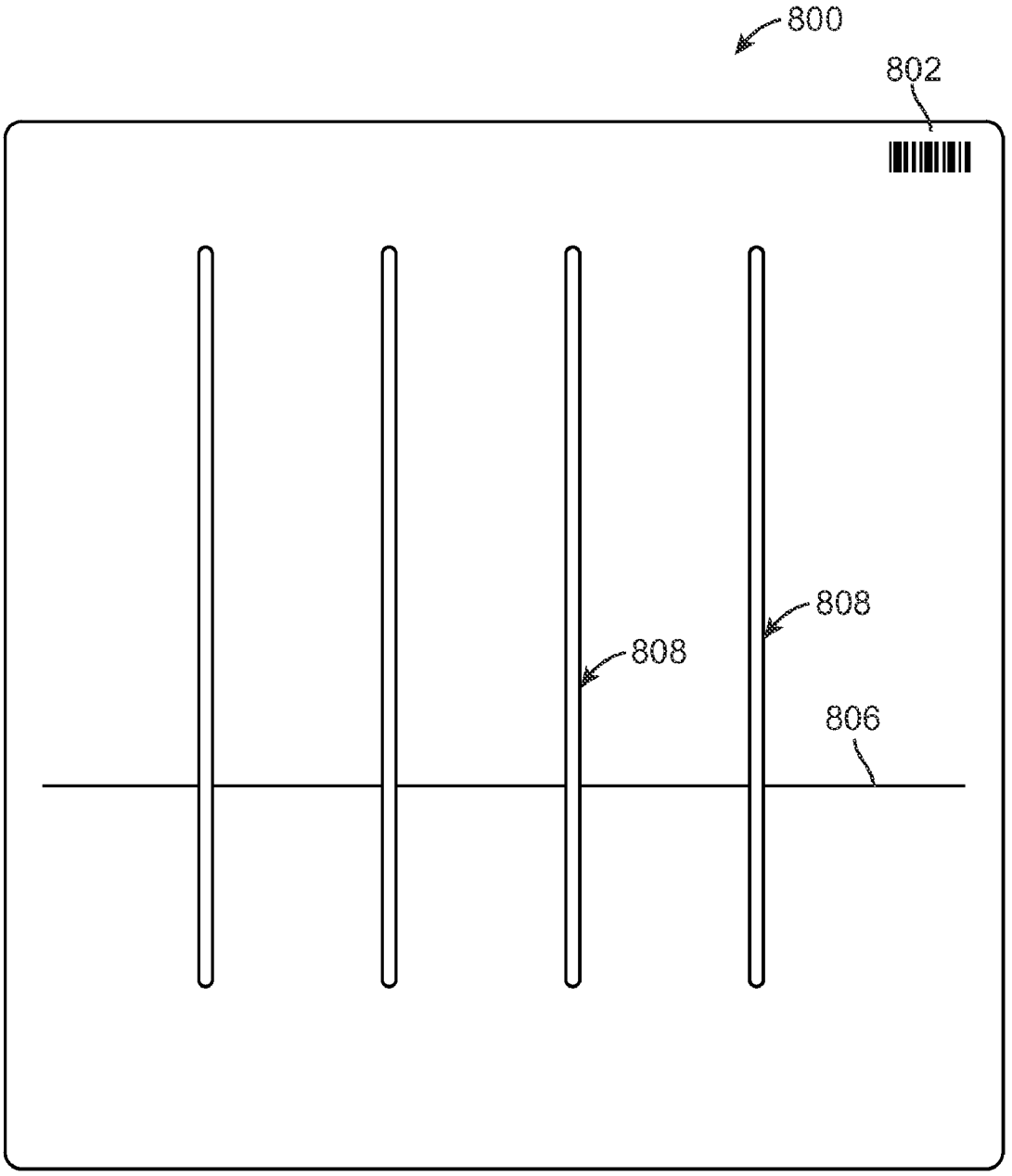

FIG. 45

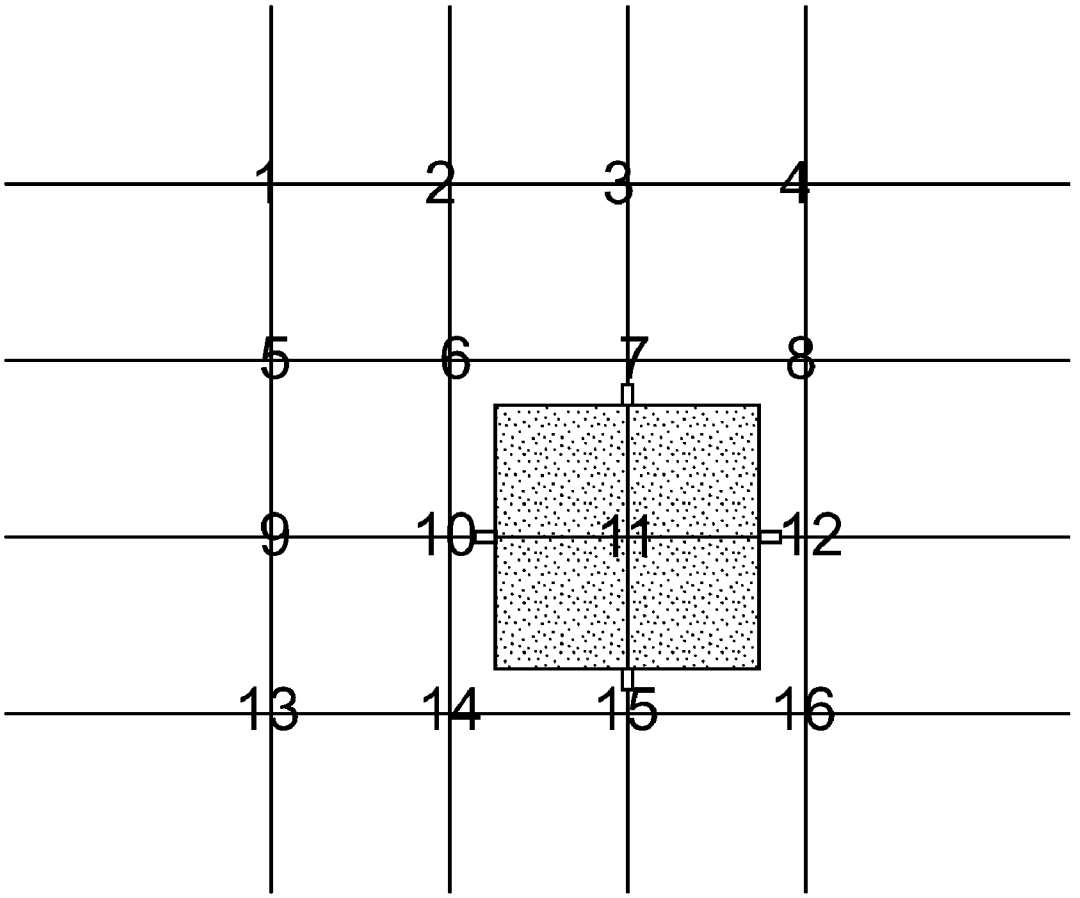

FIG. 46

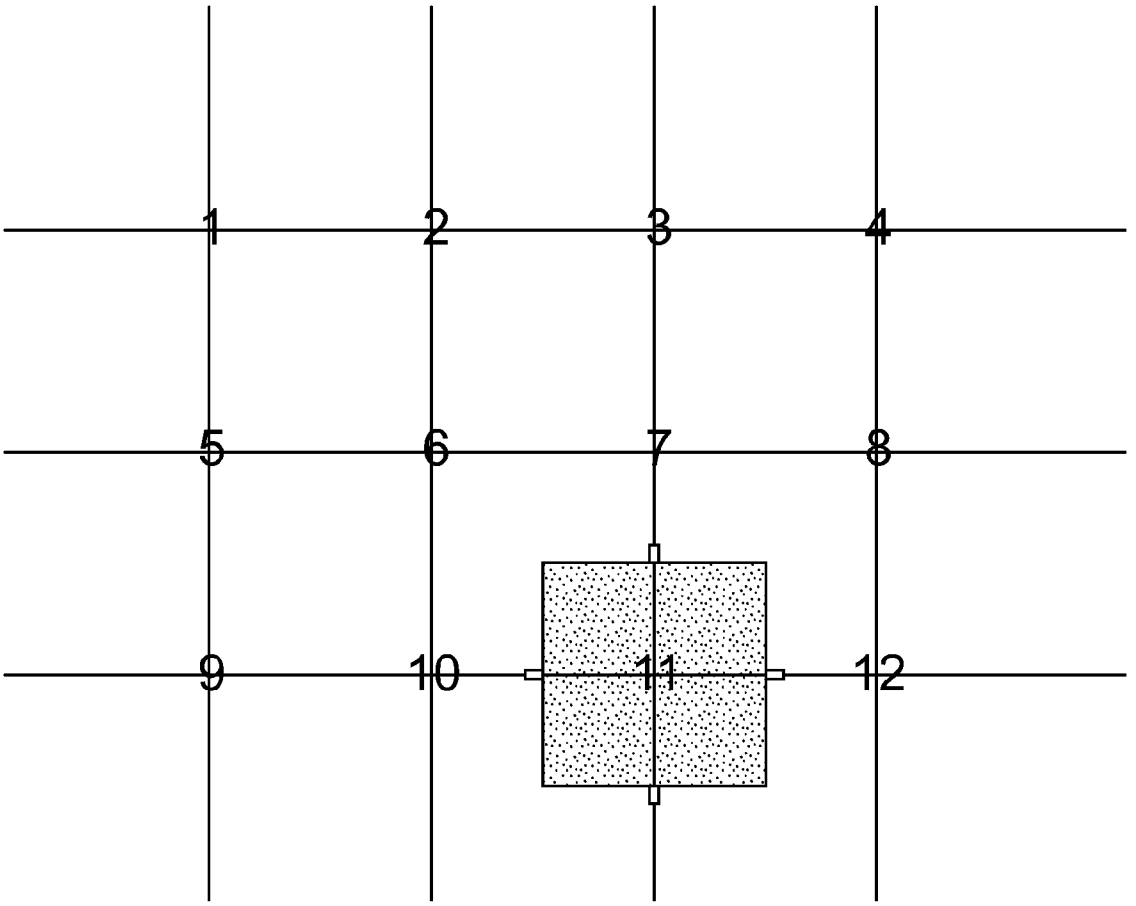

FIG. 47

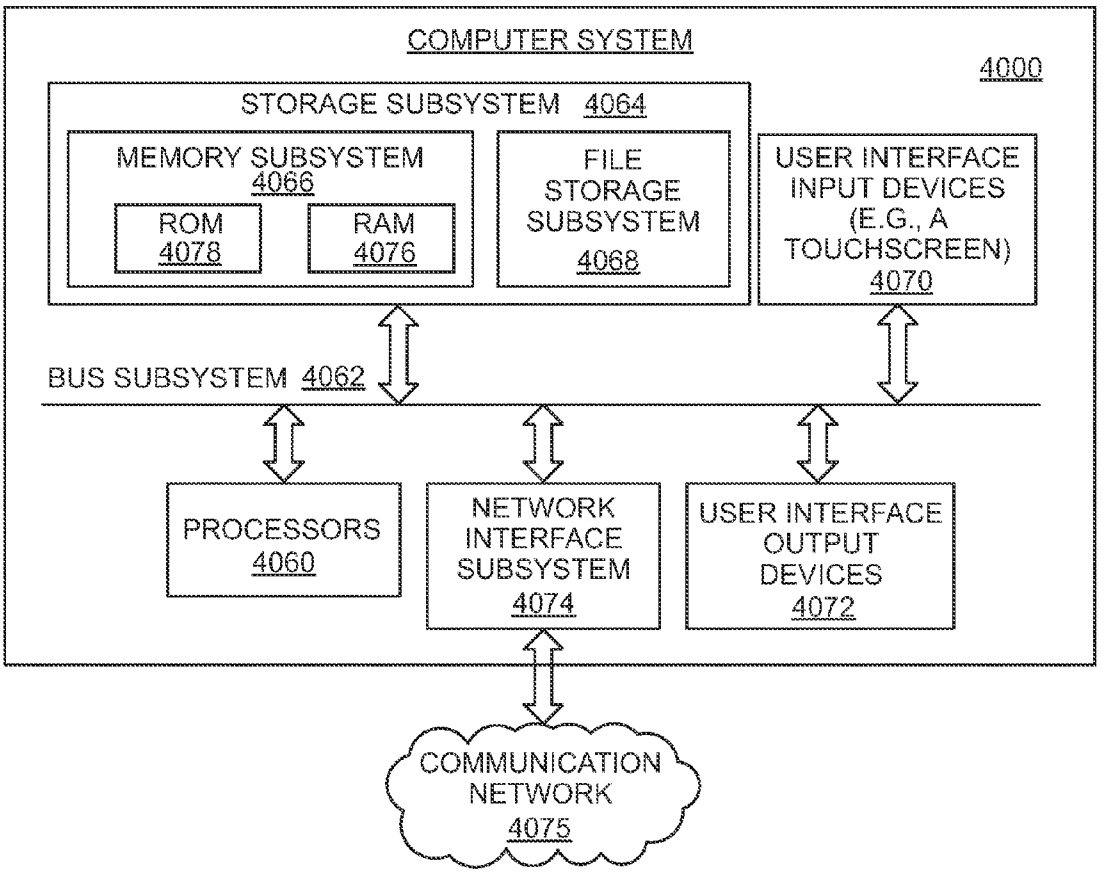
COMPUTER SYSTEM
4000
STORAGE SUBSYSTEM 4064
MEMORY SUBSYSTEM 4066
ROM 4078
RAM 4076
FILE STORAGE SUBSYSTEM 4068
USER INTERFACE INPUT DEVICES (E.G., A TOUCHSCREEN) 4070
BUS SUBSYSTEM 4062
PROCESSORS 4060
NETWORK INTERFACE SUBSYSTEM 4074
USER INTERFACE OUTPUT DEVICES 4072
COMMUNICATION NETWORK 4075

FIG. 48

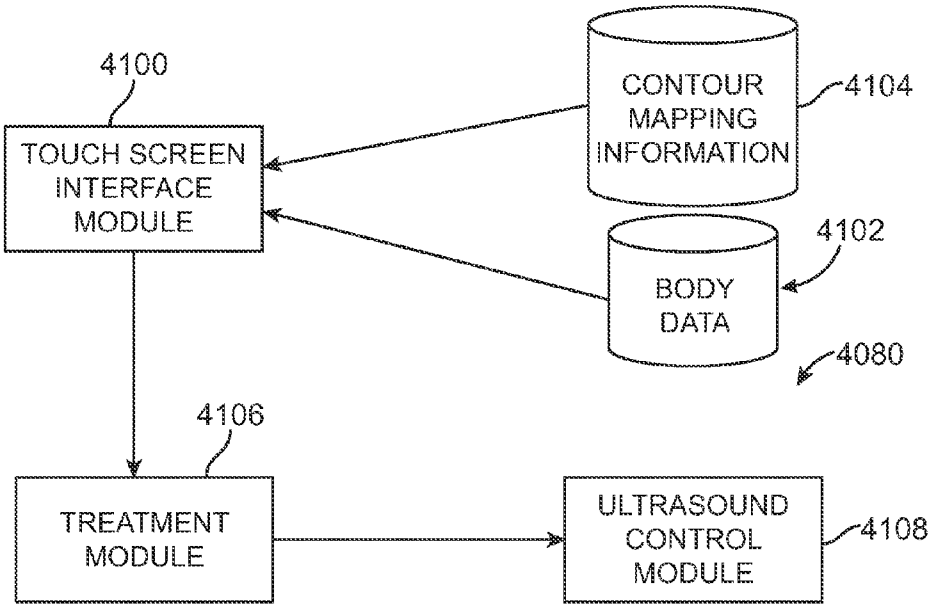
4100
TOUCH SCREEN INTERFACE MODULE
CONTOUR MAPPING INFORMATION
4104
4102
BODY DATA
4080
4106
TREATMENT MODULE
ULTRASOUND CONTROL MODULE
4108

FIG. 49

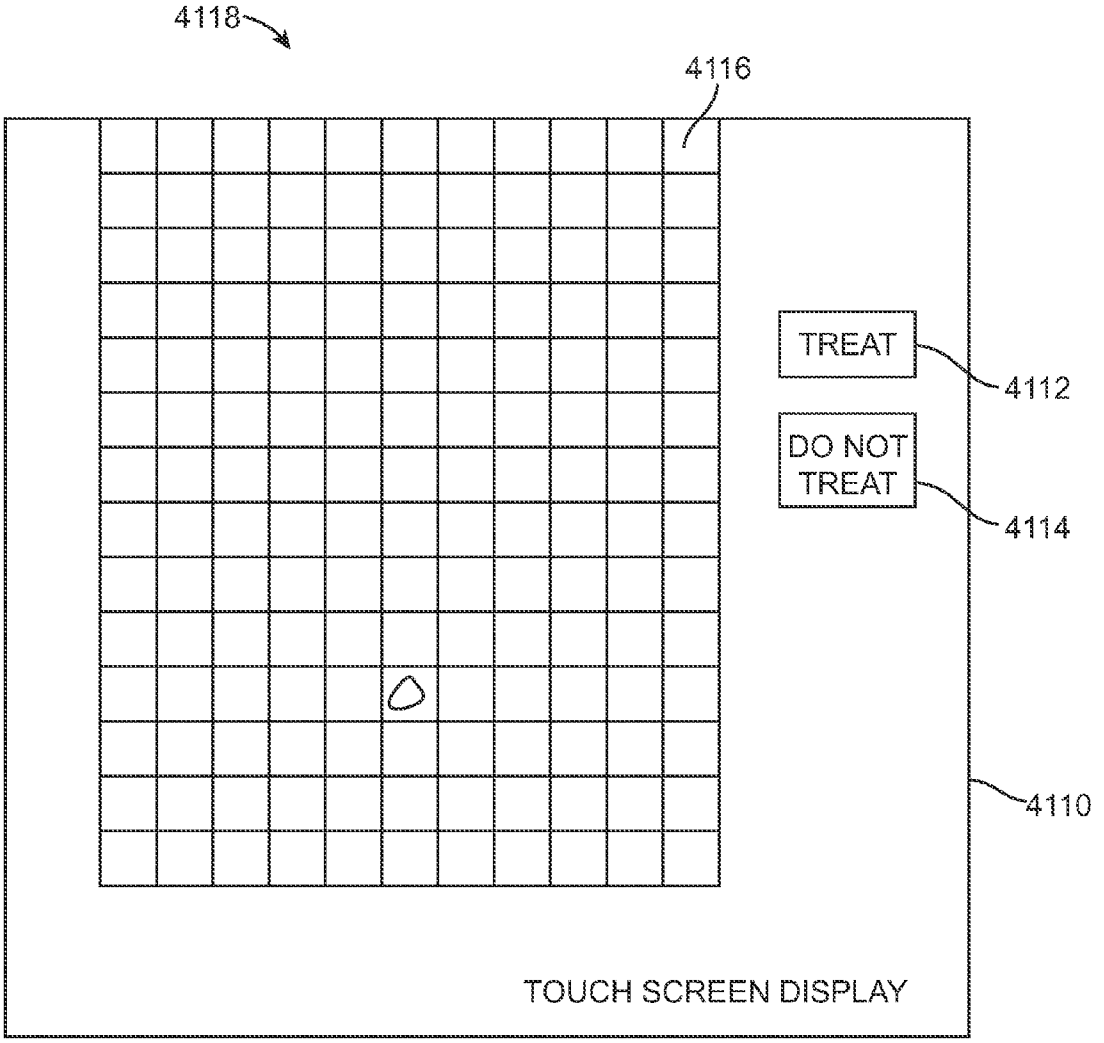
4118
4116
TREAT
4112
DO NOT TREAT
4114
4110
TOUCH SCREEN DISPLAY

FIG. 50

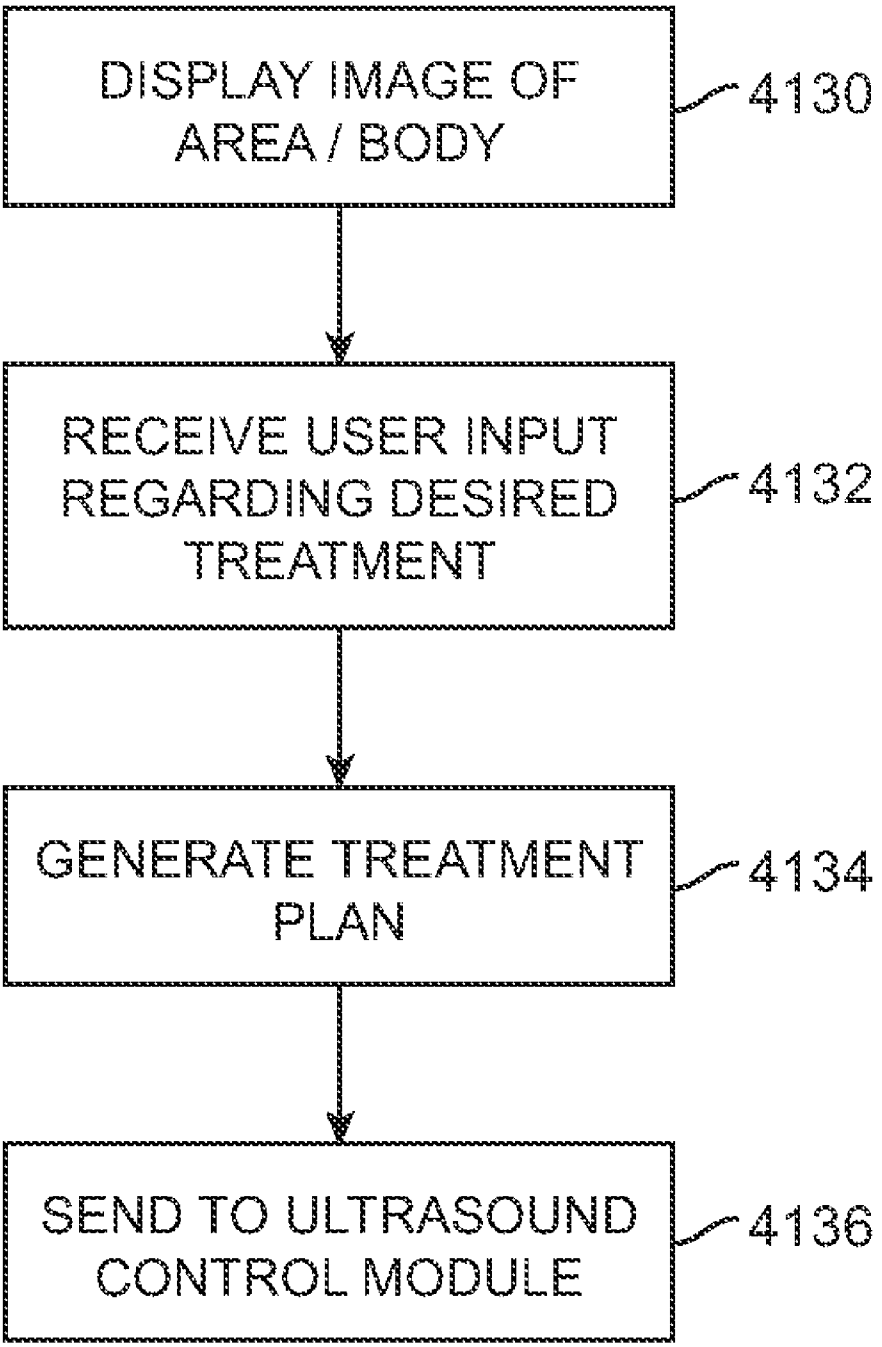
DISPLAY IMAGE OF AREA / BODY
4130
RECEIVE USER INPUT REGARDING DESIRED TREATMENT
4132
GENERATE TREATMENT PLAN
4134
SEND TO ULTRASOUND CONTROL MODULE
4136

FIG. 51

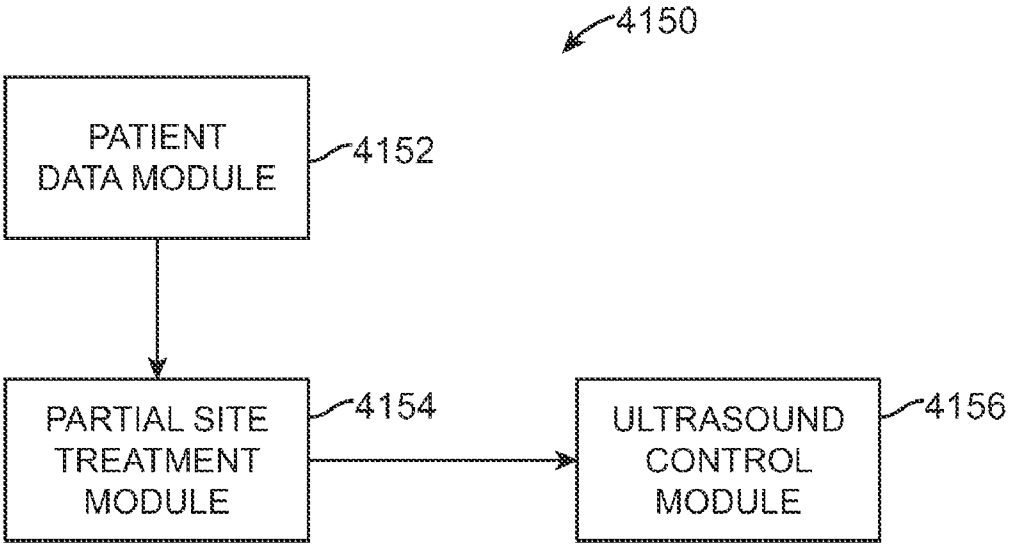
4150
PATIENT DATA MODULE
4152
PARTIAL SITE TREATMENT MODULE
4154
ULTRASOUND CONTROL MODULE
4156

FIG. 52

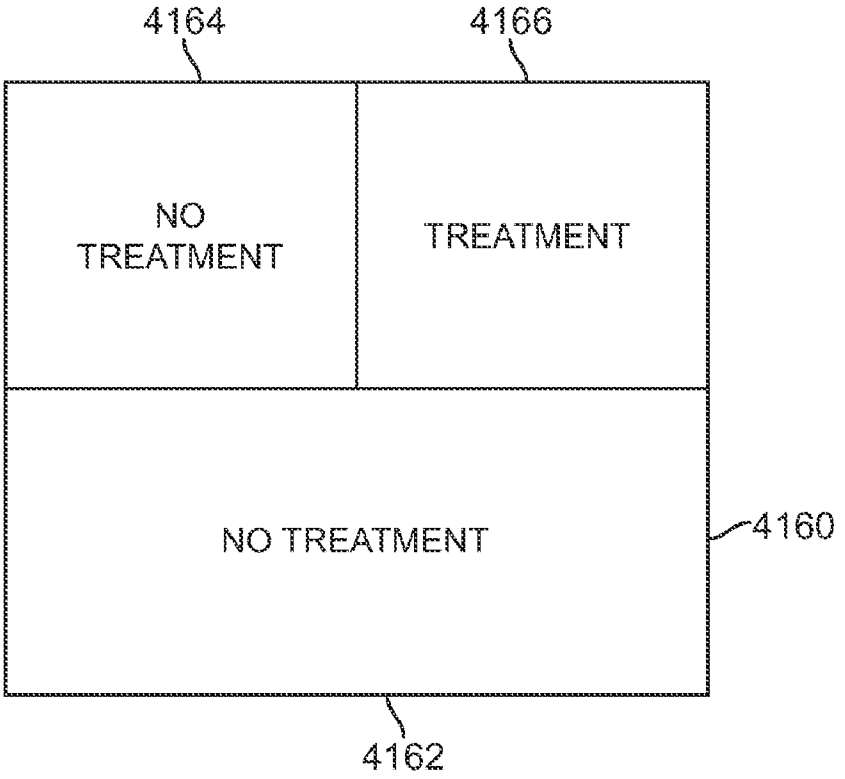
4164
4166
NO TREATMENT
TREATMENT
NO TREATMENT
4160
4162

FIG. 53

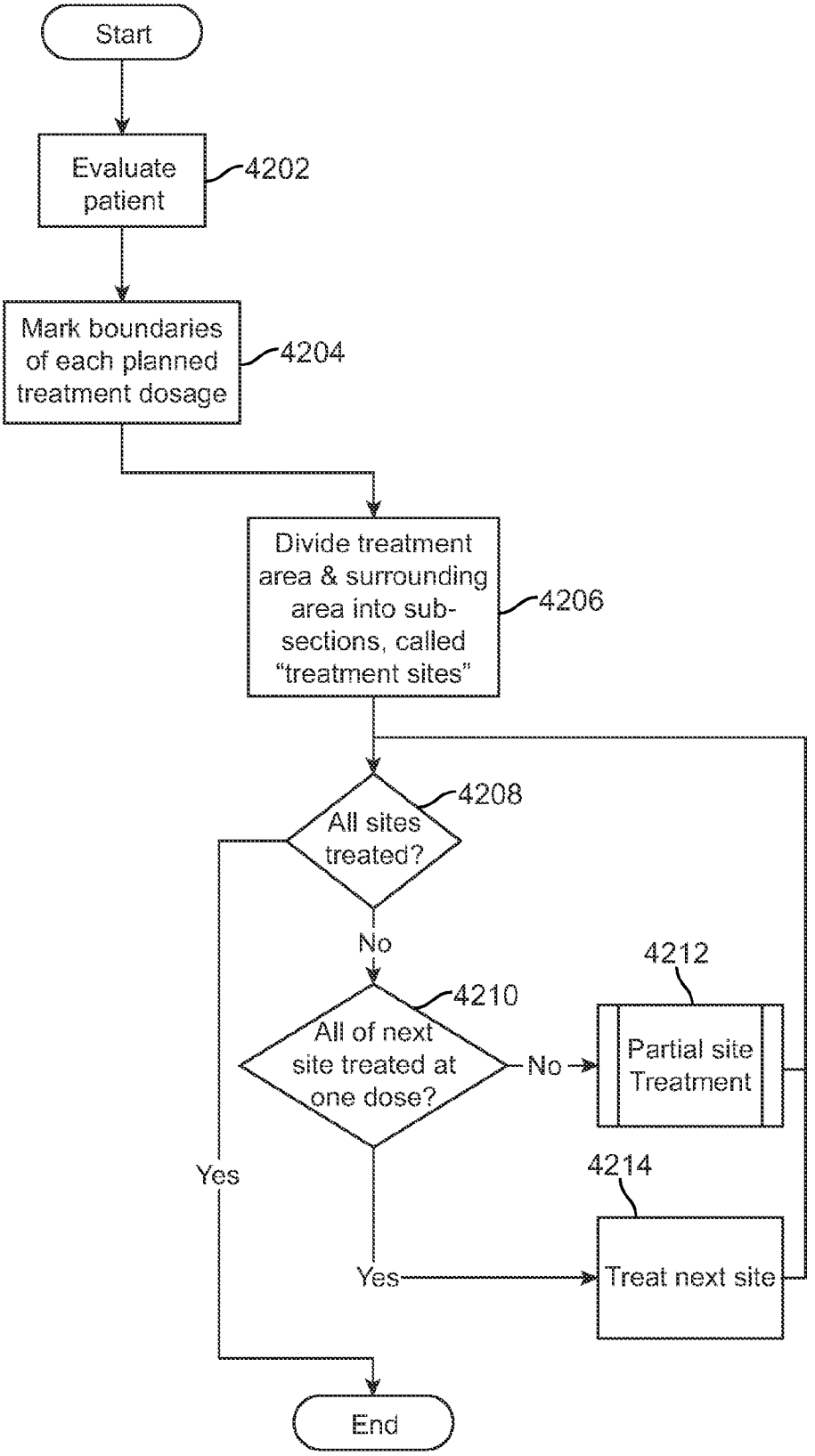
Start
Evaluate patient
4202
Mark boundaries of each planned treatment dosage
4204
Divide treatment area & surrounding area into sub-sections, called "treatment sites"
4206
All sites treated?
4208
No
Yes
All of next site treated at one dose?
4210
No
Yes
Partial site Treatment
4212
Treat next site
4214
End

FIG. 54

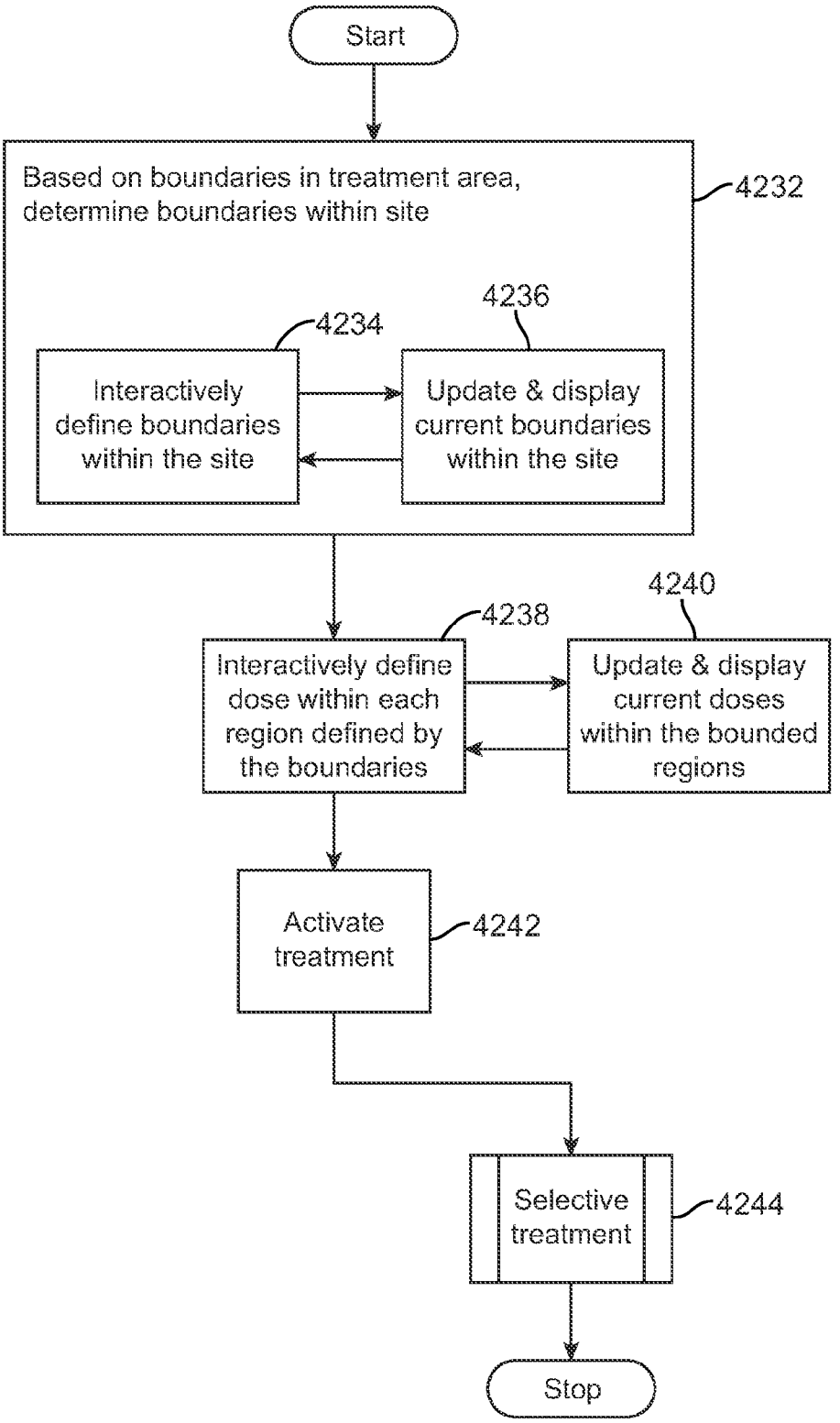
Start
Based on boundaries in treatment area, determine boundaries within site
4232
4234
4236
Interactively define boundaries within the site
Update & display current boundaries within the site
4238
4240
Interactively define dose within each region defined by the boundaries
Update & display current doses within the bounded regions
Activate treatment
4242
Selective treatment
4244
Stop

FIG. 55

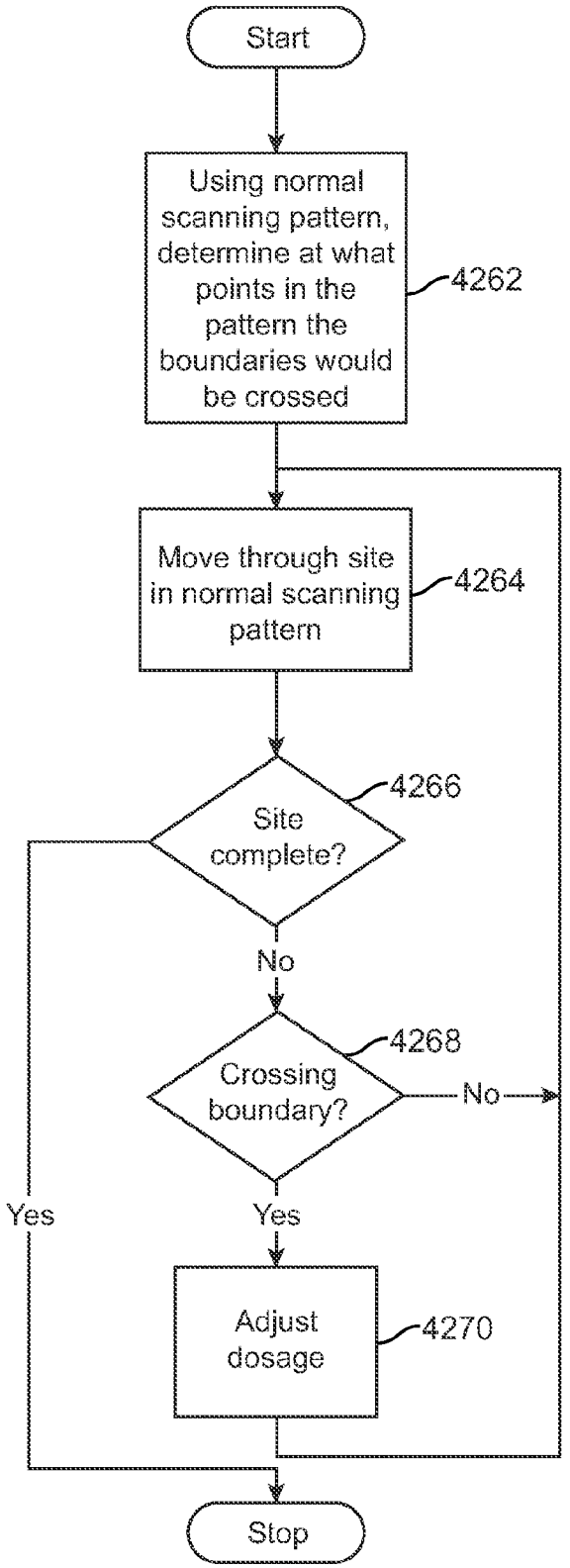
Start
Using normal scanning pattern, determine at what points in the pattern the boundaries would be crossed
4262
Move through site in normal scanning pattern
4264
Site complete?
4266
No
Crossing boundary?
4268
No
Yes
Yes
Adjust dosage
4270
Stop

FIG. 56

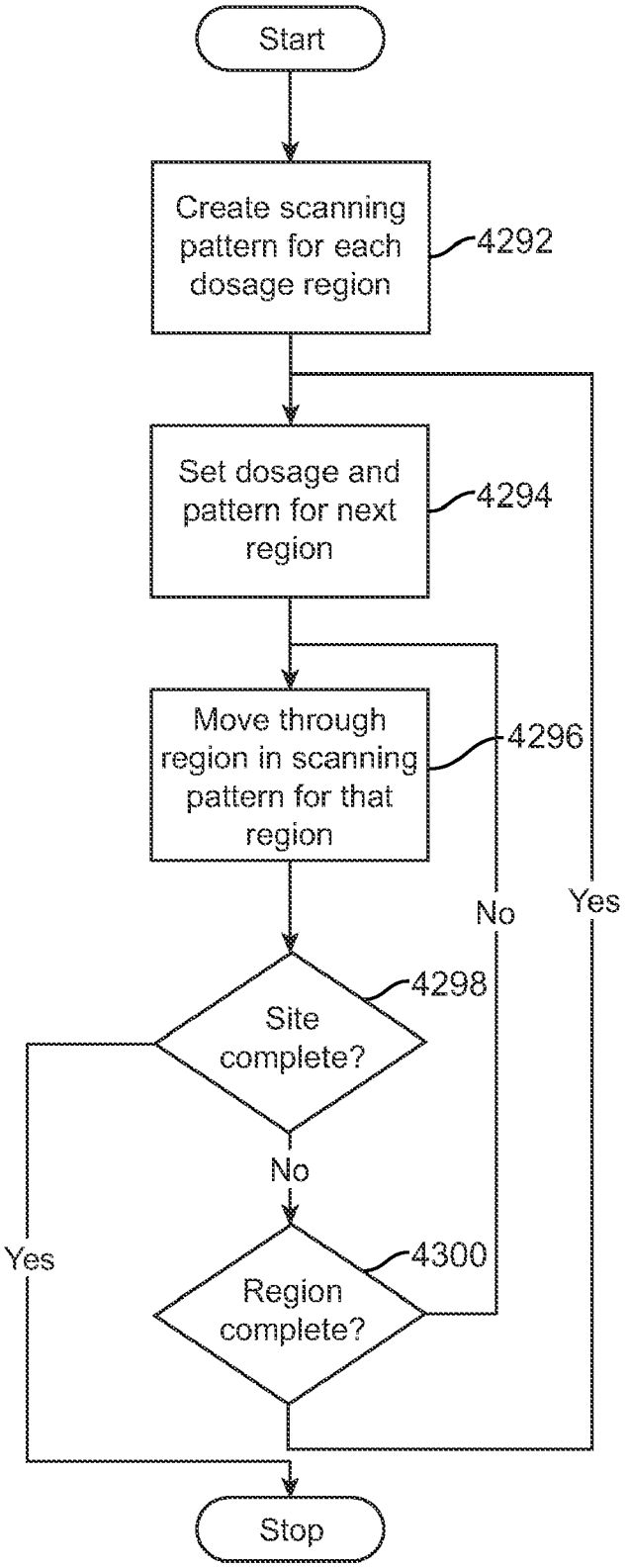
Start
Create scanning pattern for each dosage region
4292
Set dosage and pattern for next region
4294
Move through region in scanning pattern for that region
4296
No
Yes
Site complete?
4298
No
Yes
Region complete?
4300
Stop

FIG. 57

CARTRIDGE FOR USE WITH AN ULTRASOUND THERAPY HEAD

CROSS-REFERENCES TO RELATED APPLICATIONS

The present application claims priority of U.S. Patent Application No. 61/246,937, filed Sep. 29, 2009, the full disclosure of which is incorporated herein by reference.

BACKGROUND

High intensity focused ultrasound (HIFU) has gained increased popularity and support as a therapy device in the medical community. Ultrasound energy has been used extensively in non-therapeutic procedures such as tissue imaging for diagnostic purposes. HIFU involves higher levels of power (over diagnostic ultrasound), to achieve a variety of physical effects in tissue for the purpose of achieving a desired therapeutic effect. A recurring design issue for HIFU treatment devices is balancing the needs of the therapeutic demands a procedure may require, and the acceptability of the device produced by medical device manufacturers. This is particularly true in aesthetic medicine, where devices of therapeutic utility must meet the rigorous utility, image and usability demands of practitioners of aesthetic medicine and their clientele.

BRIEF SUMMARY

In accordance with embodiments, a cartridge is provided for use with an ultrasound therapy head, the ultrasound therapy head including a body with a first electrical connector, and first and second fluid connectors. The cartridge includes a sealed substantially liquid tight enclosure, the enclosure being removably mountable to the body and having an interior and an acoustic window. A second electrical connector is removably connectable to the first electrical connector. An ultrasound transducer is mounted in the interior and in electrical communication with the second electrical connector. The transducer is configured and arranged, when the cartridge is connected to the body, to deliver ultrasonic energy through the acoustic window when energized via the first and second connectors. A transducer coupling liquid is sealed within the liquid tight enclosure. A fluid heat exchanger is mounted in the interior and includes third and fourth fluid connectors removably connectable to the first and second fluid connectors, respectively. The fluid heat exchanger is configured to receive, when the cartridge is connected to the body, a flow of fluid via the fluid connectors, the flow of fluid for cooling the coupling fluid. The cartridge is configured so that the cartridge is connectable to the body, with the first electrical connector connecting to the second electrical connector and the first and second fluid connectors connecting to the third and fourth fluid connectors, respectively, without removing the transducer from the sealed enclosure.

In accordance with embodiments, the transducer coupling liquid includes a salt and water solution. The salt can be, for example, calcium chloride, with the solution being, for example, approximately 21% calcium chloride by weight. The water can be, for example, degassed water.

In accordance with further embodiments, the body includes a motor drive unit and the transducer is mounted for movement in the interior. The transducer is removably connectable to the motor drive unit when the body is connected to the cartridge such that the transducer is movable by the motor drive unit when connected. One of the transducer and the motor drive unit includes a shaft, and the other of the motor drive unit and the transducer comprises a recess. The shaft fits in the recess when the transducer is connected to the motor drive unit.

In yet other embodiments, the cartridge includes a mechanical pressure compensator in fluid connection with the interior. The compensator permits adaptation to variation in pressure in the interior.

In embodiments, the cartridge is plastic and can be, for example, polyetherimide.

In further embodiments, the body includes a cooling system that is mounted to the body and that, when connected to the heat exchanger, routes a cooling fluid through the heat exchanger. The fluid heat exchanger may include a thermally conductive conduit extending around a perimeter of the interior. An alignment feature can be provided on the cartridge for engaging a feature on the body, and for aligning attachment of the cartridge to the body.

BRIEF DESCRIPTION OF THE DRAWINGS

FIG. **1** shows a medical ultrasound system of the prior art;

FIG. **2** is a perspective view of a medical ultrasound system in accordance with an embodiment;

FIG. **3** is a perspective view of a medical ultrasound system in accordance with an embodiment;

FIG. **4** is a front view of the base unit from FIG. **2**;

FIG. **5** is a side view of the base unit from FIG. **2**;

FIG. **6** is a interior perspective view of the main compartment according to an embodiment;

FIG. **7** is a interior profile view of the main compartment according to an embodiment;

FIG. **8** is a perspective view of the main compartment with cover according to an embodiment;

FIG. **9** shows a cross-section of a system for separating gas from a gas-containing liquid in accordance with an embodiment.

FIG. **10**A illustrates the operation of the degassing system of FIG. **9**.

FIG. **10**B illustrates an alternative embodiment of a degas system.

FIG. **11** is a schematic diagram illustrating a system for separating gas from a gas-containing liquid in accordance with another embodiment.

FIG. **12** is a block diagram of a medical ultrasound system having a degassing unit in accordance with an embodiment.

FIG. **13** is a cross section of a cable according to an embodiment;

FIG. **14** is a perspective view of the treatment head according to an embodiment;

FIG. **15** is a perspective view of the treatment head according to an embodiment;

FIG. **16** is a transparent profile view with internal components of the treatment head according to an embodiment;

FIG. **17** is a transparent perspective view of FIG. **16**;

FIG. **18** is a bottom isometric view of the therapy head of FIG. **15**;

FIG. **19** is a schematic diagram representing some components of a medical ultrasound system in accordance with an embodiment;

FIG. **20** is a schematic diagram representing some components of a medical ultrasound system in accordance with an embodiment;

FIG. **21** is a perspective view of a lower compartment, or cartridge, for the therapy head of FIG. **16** in accordance with an embodiment;

FIG. **22** is an exploded perspective view of the lower compartment of FIG. **21**;

FIG. **23** an exploded perspective view of a thermoelectric device stack and related components for the therapy head of FIG. **22**;

FIG. **24** is a perspective view of the upper and lower compartment thermoelectric device stacks;

FIG. **25** is a perspective view of the combined thermoelectric device stack;

FIG. **26** is a perspective view of the exploded components of FIG. **21**;

FIG. **27**A is a schematic diagram representing components of a medical ultrasound system in accordance with another embodiment;

FIG. **27**B is an isometric view of the bottom of the upper section in accordance with an embodiment.

FIG. **28** is an isometric view of a transducer cartridge for a therapy head in accordance with an embodiment;

FIG. **29**A is an exploded isometric view of the transducer cartridge of FIG. **28**;

FIG. **29**B is an isometric view of a bottom portion of a transducer cartridge displaying an alternative fluid conduit in accordance with an embodiment;

FIG. **30** is an exploded isometric view of the transducer cartridge having a thermal regulating device according to an embodiment;

FIG. **31** is an exploded isometric view of the transducer cartridge according to an embodiment;

FIGS. **32**A-B provide a pressure relief mechanism in accordance with an embodiment for the cartridge;

FIGS. **33**A-B provide a pressure relief mechanism in accordance with an embodiment for the cartridge;

FIG. **34** illustrates the vacuum assembly of FIG. **9**;

FIG. **35** shows an alternative embodiment of an interface cable;

FIG. **36**A shows a tall stack transducer assembly;

FIGS. **36**B-D provide views of a short stack transducer assembly, according to embodiments.

FIG. **37** shows a unigrip handle according to an embodiment.

FIG. **38** is a block diagram of a coupling fluid system, in accordance with an embodiment.

FIG. **39** shows a medical ultrasound system having a coupling fluid reservoir and a coupling fluid line, in accordance with an embodiment.

FIG. **40** is a block diagram of fluid flow system, in accordance with an embodiment.

FIG. **41** is a transparent side view of a treatment head having a spray nozzle according to an embodiment.

FIG. **42** is a perspective view of an ultrasound head having handles and spray nozzles coupled with the handles, in accordance with an embodiment.

FIG. **43** is a perspective view of an ultrasound head having offset spray nozzles, in accordance with an embodiment.

FIG. **44**A is a perspective view of an ultrasound head having integrated spray nozzles, in accordance with an embodiment.

FIG. **44**B provides a view of an ultrasound therapy head having a guide component for the liquid dispersal device(s) according to an embodiment;

FIG. **45** is an illustration of a template for use in creating a variable size and alignment pattern on a patient body according to an embodiment.

FIG. **46** is an illustration of the use of a variable treatment size pattern in an embodiment.

FIG. **47** is an illustration of the use of a variable treatment alignment pattern according to an embodiment.

FIG. **48** illustrates a simplified block diagram of a computer system in accordance with embodiments.

FIG. **49** schematically illustrates a series of modules according to an embodiment.

FIG. **50** is an example of a touch screen.

FIG. **51** shows steps for providing treatment information to a control module in accordance with embodiments.

FIG. **52** illustrates a module for providing variable treatment to different areas in accordance with embodiments.

FIG. **53** shows an arrangement of broadcast zones divided into treatment and non-treatment zones.

FIG. **54** shows steps for establishing a partial treatment area in accordance with embodiments.

FIG. **55** shows a method for partial site treatment in accordance with embodiments.

FIG. **56** shows a method for providing selective treatment at a site in accordance with embodiments.

FIG. **57** shows another method of selective treatment at a therapy head site in accordance with embodiments.

DETAILED DESCRIPTION

In the following description, various embodiments of the present invention will be described. For purposes of explanation, specific configurations and details are set forth in order to provide a thorough understanding of the embodiments. However, it will also be apparent to one skilled in the art that the present invention may be practiced without the specific details. Furthermore, well-known features may be omitted or simplified in order not to obscure the embodiment being described.

Described herein are medical ultrasound systems for body contouring, components of medical ultrasound systems, and methods for servicing, updating and using medical ultrasound systems.

Medical ultrasound systems on the invention typically include two main components with various subcomponents. The first main component is the base unit. The base unit component is usually a mobile piece of equipment designed to rest on the floor and provide an enclosed form factor that houses numerous subcomponents of the system. Details of the sub components are provided throughout the description. Mainly, the subcomponents that are either large or heavy, or more conveniently located away from a patient, are stored in the system base. The base unit refers to the larger of the two main components. It may have castors or wheels and be referred to herein as a cart. Mobility in the base unit is generally provided for ease of use, but in no way should be read as limiting the invention in any way.

The second main component is the treatment head. The treatment head component of medical ultrasound systems of the invention is also described herein in various embodiments. In a typical aspect, the treatment head has two sections that are detachable from each other. When the two sections are properly assembled in such aspects, the treatment head operates in conjunction with the base unit to produce ultrasound energy for medical purposes. Each section is often referred to herein as the therapy head body, and the cartridge. Alternatively the therapy head body may be the upper compartment while the cartridge is the lower compartment. The therapy head (or therapy head body) contains subcomponents that are designed for long wear and extended use. The cartridge contains subcomponents that are generally designed for limited use before being replaced. The term treatment head and therapy head are sometimes used interchangeably and may include the cartridge with the upper compartment. The cartridge contains an energy emitter, and in most embodi-

ments, this energy emitter may be at least one high intensity focused ultrasound (HIFU) transducer. The cartridge generally is removable and has a limited life span.

The primary purpose of the system is to provide therapeutic ultrasound for the purposes of body contouring. This intended use of the system is for non-invasive therapy. That is, the present system and its many sub components are designed for use outside a patient body and typically does not involve any minimally invasive techniques, surgery, or tissue imaging other than what the system is capable of performing by itself. The system can operate independently of diagnostic, imaging, or anesthetic equipment that might also be used on a patient. Systems of the invention also or alternatively can be used in a non-sterile field. Sterilization of the many parts and system surfaces is not typically required between uses, though individual users may choose to do so for various reasons. The many embodiments of the invention described herein provide for a more usable device for body contouring over those of the prior art.

An interface cable is typically used to connect the base to the treatment head. A number of examples of such cables are described herein.

The description of the many embodiments of each of the components is not meant to imply a strict requirement of one embodiment of one component being tied solely to another embodiment of another component. Rather the description of the various embodiments of each the base unit, the treatment head and the interface cable should be viewed as interchangeable. An embodiment of the base unit may be used with more than one embodiment of the treatment head, and vice versa. Some embodiments of either the base or the treatment head will logically exclude embodiments of the other component. Those skilled in the art will realize certain pairings of base unit and treatment head do not go together, however in general the various embodiments of one component are designed to work equally well with the various embodiments of the other components. The various embodiments are herein described both in text, and in annotated drawing descriptions.

In an embodiment, the base unit is a base with a low center of gravity and rests on a frame with casters. Extending from the base is, e.g., a combined ergonomic front panel and main system compartment. The main system compartment can be mounted on the frame with casters, and the ergonomic front panel serves as one side of the compartment. The front panel typically extends upward from the base and main compartment. One or two handles are usually integrated into the front face so that the handle(s) can be easily reached, and a display screen is commonly ergonomically positioned for easy viewing. The front panel typically further possesses at least one docking port for removably receiving a treatment head. Additional docking ports may also be incorporated into the front panel.

Extending from the upper end of the front panel typically is a display screen. The display may also be a touch screen interface. The display panel or the base unit may have speakers for producing audible signals for the user. Inputs for other user interface devices, such as a keyboard, mouse or pointer device, may also be provided.

The main compartment of the base unit contains the bulk of the system electronics. These electronics typically include a group of treatment head connectors (electrical and fluidics) and a treatment head interface board; a digital data interface; system electronics including a therapy processor and a high voltage transmitter; electronic control for a fluidics system (liquid circulation system) having chiller/fans, fluid tank, pump and sensors; and a system power supply. The fluidics system may also incorporate a degas device for removing dissolved gasses from the liquid. Additional electronics may be added via one or more daughter board adapters located on any one of the existing boards within the system.

Systems of the invention should typically utilize liquid in the fluidics system in a different manner over the prior art. Instead of filling and draining the therapy head when replacing a transducer, many embodiments use a transducer in a sealed cartridge. The cartridge may contain about 100 to 200 milliliters (ml) of static liquid coupling fluid, whereas the prior art may use about 400-500 ml of liquid routed throughout the base unit and the therapy head. The cartridge may be designed for using about 120-160 ml, and in another aspect the cartridge may contain 130-150 ml. In addition, embodiments herein utilize a cartridge that is self contained. Thus, the coupling liquid remains static in the cartridge, and does not need to be replaced when that cartridge is removed from the therapy head. Distinguished from the coupling liquid is a cooling liquid in many embodiments. The cooling fluid is circulated through a heat exchanger thermally connected to the cartridge. The heat exchanger may be in the cartridge (integrated within the cartridge) or part of the therapy head and fashioned to draw heat away from the cartridge. Using a separate cooling liquid (from the coupling fluid) allows the cooling liquid circulation to move the length of the circulation system more efficiently. The majority of embodiments also provide for a treatment head that no longer requires constant filling and draining, thus reducing the spillage and fluid loss from the fluidics system. Advantages of some embodiments of the systems of the invention also or alternatively include faster and/or cleaner replacement of the transducer assembly.

The description of pressures herein make reference to either "absolute" pressure, or "gauge" pressure, both measured in PSI. Absolute pressure is the pressure measured independent of atmospheric pressure. It is the "absolute" pressure relative to zero PSI (pounds per square inch). The gauge pressure is the pressure above the local atmospheric pressure. Gauge is the local atmospheric pressure, plus the pressure read in the system or component described. The various pressure readings are usually called out, however unless specified, pressures relating to the therapy head are generally GAUGE pressures, and pressures in the fluid circulation components in the base are generally ABSOLUTE pressures.

The use of a separate cooling liquid and circulation system (separated from the coupling liquid in the cartridge) may allow the circulation system to pump smaller volumes of cooling liquid to cool the cartridge. Typically, the cooling system pumps the cooling liquid at about 40 PSI (gauge) in the base unit to achieve a therapy head/cartridge system pressure of about 20 PSI (gauge). The cooling system pressure is generally above atmospheric pressure through out the system, but may approach atmospheric pressure when returning from the therapy head to the fluid reservoir (described herein). In these embodiments, the lower fluid quantity required in the therapy head allows for a lower volume of fluid to be pumped, and may in turn allow for a pump using less power. It may also be true that a lower fluid flow rate (volume/sec) is required to provide the same level of cooling as in prior art systems. This feature provides another area of bulk and weight savings allowing the present system to be substantially smaller in size and weight compared to the prior art. Furthermore, the fluidics system in some embodiments no longer requires a degas unit for removing dissolved gases from the coupling liquid as are used in prior art devices that circulate a coupling liquid around the transducer. This provides the advantage of allowing the system liquid to contain dissolved gasses without

causing interference in the transmission of ultrasound energy in the cartridge fluid from the treatment head to the patient.

The system described herein typically makes use of higher levels of integration in the functions provided reducing power and electrical signal interconnects between the various functions allowing for reduced number of circuit cards and cabling internal to the system compared to the prior art system shown in FIG. **1**.

The system may have an Ethernet adapter to receive a 10/100/1000 Ethernet line which may be used to link the system to a service computer or the internet, and provide software updates, system diagnostic capabilities, account usage updating and/or investment recovery banking of unused pay-per-use units for the treatment head (also known as "user sites" and described in co-pending U.S. patent application Ser. No. 12/407,212, filed Mar. 19, 2009, and entitled "Methods and Apparatus for Medical Device Investment Recovery").

The display screen typically included with the system provides system information and operational information to the user. In one aspect, the display has touch screen capabilities, allowing the user to use the screen as a control interface for operating the system, checking system status, running diagnostics programs, displaying error messages and system alerts, and/or providing a user with an interface to check non-active functions related to system usage, such as checking the user site bank account. The display screen may incorporate both button touch screen functions, and motion sensitivity, similar to screens used in personal data assistants and mobile phones. It may also or alternatively provide an on/off switch and/or house a speaker. In another aspect, the screen is a conventional LCD device.

One or more foot switch jacks can also or alternatively are provided for connecting a single or multifunction foot switch. The foot switch may optionally be used to control therapy activation of the system. Some users prefer hand activated therapy treatment while others prefer using a foot switch. Typically, systems of the invention can provide the option for either method to be used.

A system power supply is usually provided in the cart. In one aspect, the power supply can run on normal amperage and voltage. For example, in the United States, the system operates on a standard 115 volt/15 amp 60 Hz line using a grounded plug. In Europe the system operates on a European standard 240 volts/50 Hz line. Similarly the system uses a power supply that converts the power of the local standard into the power requirements the system needs for proper operation. A safety sensor or watchdog circuit monitors the AC power input as well as the DC output of the supply and provides a cut off in the event the power input or output is out of safety specification for the system. In an embodiment, the system operates with as many components as possible requiring the same voltage. In another embodiment, the system utilizes one voltage for all components. In still another embodiment the system utilizes two voltages for all components.

The system may have one or more treatment heads connected to the base unit. The treatment head(s) are usually connected to the base unit by a cable. In one aspect, the system has been partitioned to allow for an interface cable to be used, which combines electrical and fluid channels between the base unit and the treatment head. The treatment head may also or alternatively possess any of the following: user controls allowing for the turning on or off of the transducer, a display to provide status information, a speaker or sound emitting component or device, and/or any other controls and indicator lights as may be desired. In addition to controls on the treatment head, display, and/or foot switch, the base unit can have inputs for other user input devices like a keyboard, mouse (computer pointer device), or other control unit. A wireless control device may also be used.

In one aspect, the treatment head is connected to the base unit using only the minimum number of connections required for system operation. The proper functional partitioning of the system can allow for a reduction in wires used to connect between the system electronics in the base, and the treatment head. A technical challenge in the prior art was the requirement for multiple signals wires to be used for the interface between the treatment head and system. By proper partitioning and circuit design the interface for control, monitor and status can become a pure digital interface. A digital interface can then be implemented using serialization techniques to reduce the interface to a few digital lines. Serializing data allows for reducing the number of signaling circuits. Another technical challenge of the prior art is providing a light weight and easily manageable cooling device for the hand held component. Reducing the cooling requirements of the cartridge can also allow the reduction of the fluid lines to and from the treatment head to allow for a small diameter interface cable.

To facilitate the removal of a mechanical arm as used in the prior art, one embodiment may partition the circuitry between the treatment head and base unit to allow for an interface cable to be used. An embodiment of an interface cable is now described. The interface cable possesses a high speed serial digital interface. The digital interface is enabled by partitioning any power amplifiers, for motor control or cooling devices for example in the treatment head; digitizing analog signals in the treatment head, for example temperature sensors, provide for a digital interface to the various functions in the treatment head and provide for a serial interface to the digital interfaces. This type of system allows the leveraging of existing Low Voltage Differential Signaling (LVDS) technology to implement a high speed serial digital interface between the base and treatment head. The serial digital interface removes the bulk of analog, motor drive and parallel digital signals that were carried on multiple cables in the prior art. By using high speed serial digital interface, and properly partitioning the circuitry between the treatment head and cart, the control and information can now be passed through a small group of twisted pair wires.

Serialization of the signals between the base unit and the treatment head is processed by a pair of chips; one in the base unit and one in the upper compartment of the treatment head. The chips are responsible for regulating signal traffic produced by the system electronics (both in the base and in the treatment head) and feeding them serially through two pairs of twisted pair wires. One pair allows for uninterrupted signal from the base to the treatment head, while the other pair allows for signal from the treatment head to the cart. The twisted pair wires connect (allowing electronic communication between) the pair of chips where encoding, decoding, and serialization occurs. The chips may be general processors, field programmable gate arrays (FPGA) or application specific integrated circuits (ASIC) or any combination of these devices and/or their equivalents. These chips can also perform additional encoding for line balancing and bandwidth reduction. The chips may also provide error checking of data.

In an embodiment, signal count can be reduced by using a serialize-deserialize routine executed between the pair of chips, one located in the base unit and the other in the treatment head. In an embodiment, a pair of field programmable gate array (FPGA) chips in the system and the head do additional encoding for line balance and transmission line band-

width reduction similar to 8 B/10 B encoding. The FPGAs also error check the data. The pair of chips operate as serializer-deserializer (SERDES) components. The first chip in the base unit receives electrical signals from the electronic components within the base unit. All the electrical components within the base unit that are used to control any component, process or monitor any function in the treatment head are routed through the first chip in the base unit. Data is transmitted between the base and treatment head chips using time division multiplexing. Thus where unserialized signal control would ordinarily require at least one wire for every control circuit to the appropriate electrical control element to be controlled, various embodiments of system of the invention allow signals to be sent to various components to be controlled over the same wire. In an embodiment, the serialize action takes 15 signals and encodes them to 18 signals for transmission line bandwidth reduction as well as error checking The serializer then sends them through the first pair of wires with the first signal being sent for a short period and then the second signal being sent for a short period, and so on. There are 20 time periods in all due to the overhead of a start bit and a stop bit surrounding each set of 18 bits. All of this is controlled by the FPGA chips used in the SERDES operation (and/or an application specific integrated circuit (ASIC) or equivalent function SERDES device). The number of time periods is not fixed, and may be adjusted higher or lower as desired. Because the transmission and SERDES operation occur very quickly relative to the mechanical operation of the treatment head, there is no issue of lag or signal backlogging in communication between the base unit and treatment head during therapy treatment. By way of example, an embodiment of the above described operation takes advantage of simultaneous (parallel) system inputs that are sent to the treatment head in a serial fashion—or at least at a different level than the 15 bits discussed above. Data that is low enough in bandwidth is serialized prior to sending. An example of this can be motor commands. In an embodiment, each of the two motors require 12 bits of drive command. This would mean that more than all of the 15 signaled bits would be used up for just motor drive commands—24 bits. For this reason the system assigns 4 of the lines to be a Serial Peripheral Interface (SPI) bus. The system sends all 15 bits 30,000,000 times per second, easily enabling some of them to be serial in nature and still have a very high bandwidth compared to the requirements. The 24-bit data on the SPI bus in the above example would send the two drive commands about 625,000 times a second. This is well above the 20 kH motor current command sample rate produced by the motor servo controller in the main unit. It takes at least 48 "frames" to transmit the 24 bits in a serial fashion along with a data clock for SPI operation—a frame being one group of 15 bits of parallel.

By using a first pair of wires to transmit electrical signals from the base unit to the treatment head, and a second pair of wires to receive electrical signals from the treatment head (transmitted from the treatment head to the base unit) two electrical signal paths may operate simultaneously, with each path operating through a SERDES pathway. In addition to the control of various electronic components through the SERDES pathway, the operation of an array transducer can be handled in real time using direct wire connect between the transducer beam former (in the base unit) and the individual elements of an array transducer in the treatment head as described above. This is achievable using the same interface cable because the control signals thusly serialized leave plenty of room in the cable for many thin coax cables to drive an array transducer. If a single element transducer is used, only one coax cable is required, but several can be used to share the high power drive requirements or to optimize impedance matching. Appropriately, the cable can be laid out for the number of coax, twisted pair, power/ground and fluid lines required to provide proper connection, command and control of the treatment head.

Power is supplied from the base unit to the treatment head through individual power wires based on voltage needed to drive each component. To the extent multiple components in the treatment head can be driven by power of the same voltage, those components can be placed in a circuit with a single power wire carrying the appropriate voltage. The power wire between the base unit and the treatment head may be insulated and/or shielded so as not to produce any cross talk (signal interference) with the electrical signal in the SERDES pathway. In an aspect, the power lines may not be shielded, but instead the lines may be filtered at each end so as to just receive the direct current (DC). Alternatively, the data pairs are twisted and shielded to protect them from the power supply wires.

Integrated fluidics lines are also incorporated into the interface cable. Using any of several cooling and fluid circulation system described herein, the need for large volume fluid flow is now reduced to a level where a smaller volume of fluid can achieve the results previously required. This allows the use of reduced diameter tubes contributing to shrinking the design over the prior art.

In addition, the interface cable may include one or more transducer drive carrying cables. These drive cables may be coax cables, twisted pairs or shielded wires. Shielding is generally used on transducer drive cables to provide shielding for electro-magnetic interference (EMI) reasons. In an embodiment, an annular array transducer may be used, where multiple drive cables (such as coax) may be used in the interface cable to deliver signal to an array transducer. The number of coax cables may correspond directly to the number of transducer elements, or they may be reduced to fit a modified transducer excitement program (such as grouping elements into excitement groups, controlled by a single time delay for further reducing the signal load). In another aspect of the system of the invention, an array transducer may be used having twelve (12) to twenty four (24) elements, and the interface cable would have a corresponding number of coaxial cables incorporated into it. Alternatively the coaxial cables may be substituted with shielded twisted pairs (or unshielded wires if the bandwidth is low enough).

In an embodiment the interface cable has both 24 v and 5 v power wires, and a common ground wire. The various electronic elements in the treatment head, such as motors, sensors, transducer and other components can all be driven directly (or converted to the desired voltage in the treatment head) from the two power lines, one twisted pair (the other transmits data back to the components in the cart), and however many coax cables are required to drive the transducer in real time. Alternatively the components in the treatment head may all operate on one voltage (or converted to one voltage) and thus need only one power line in the interface cable.

In addition to the components described herein as commonly incorporated into the interface cable, the cable itself may be connectorized. That is, the cable may be removably engaged to the system (and/or the treatment head) to allow modularity of the treatment head to the system. In some cases the modularity will provide a means for attaching a completely different cable between the treatment head and the base unit. In other embodiments, the interface cable may carry the appropriate electrical communication and fluid requirements of different treatment heads, so that only the treatment head need be removed from the interface cable to

allow connection of a new treatment head. This embodiment can allow a user to detach a therapy head from the interface cable instead of removing the interface cable from the base unit, although the user may also elect to switch the interface cable with the therapy head. The removable engagement of the interface cable typically adapts to both the electrical and fluid systems while maintaining a common adapter among the different types of cables that can be used. In one aspect, the system electronics can identify what kind of cable is attached to the base unit, and utilize the wire and fluid channels of the wire appropriately. This may be achieved by using a readable identification chip incorporated into the interface cable or its removable engagement.

Automatic identification of the parts in the treatment head may occur by using a query between the base unit and the treatment head where the query produces a response code corresponding to a look up table stored in the base unit. The look up code provides the voltage and signal requirements for the operation of the treatment head components. If the interface cable is also replaced with the treatment head, a similar query and response system can be used to identify the parameters of the cable. In addition to the cable or treatment head having an identifier response to a query, each individual electronic component within the treatment head may respond to a query through the return twisted pair. A combination of query and response systems may be used to ensure proper calibration of power, signal and control of the treatment head. In an embodiment the treatment head has an encrypted code to ensure the system uses only authorized manufactured parts with the system. The lower compartment can have (or be associated with) an encrypted authorization code to track both the proper use of authorized manufactured parts, and to track the use of the transducer for site banking purposes (and also used for calibration data). Further to the challenge and response systems described herein, the treatment head and lower compartment may also use a challenge and response protocol to ensure the treatment head and lower compartment of the treatment head are hooked up to a duly authorized cart. The challenge and use protocol and the site banking protocol are further described in co-pending U.S. patent application Ser. No. 12/407,212, mentioned above.

In operation, the user typically can hold the treatment head during a HIFU procedure, and the interface cable will allow greater mobility and freedom to the operator to use the treatment head in virtually any angle or position over the prior art. The interface cable may be draped across the body of the patient under treatment, or allowed to drape over the patient's side.

If the use of a cable guide is desired by the user, an optional boom or cable retraction system may be used. A boom would provide a light weight alternative to a mechanical arm and provide sufficient structure to suspend the interface cable so the interface cable makes its approach to the patient from above the patient, instead of being draped across the patient's body. A retraction device, like a spring tensioned reel, may optionally be included that provides cable management so the interface cable does not get tangled up with the operator or patient. A retraction system may also be used within the base unit so when the treatment head is returned to its dock, the cable is automatically reeled in. Alternatively the guide may take the form of a boom, allowing the interface cable to be projected horizontally over the patient. A boom can be either retractable into the cart, or completely removable. The boom could alternatively take the form of a light weight load balancing arm.

The treatment head typically operates as a single unit during therapy, but can be separated into two discrete subcomponents. The upper compartment or therapy head body (body) usually contains electric motors, control electronics, gears and linkages for moving a transducer assembly located in a cartridge as well as the electronics like motor drivers, DACs (digital to analog converters), ADCs (analog to digital converters) and/or other logic devices. The upper compartment is typically designed for extended use, and has components that are longer in wear, or relatively expensive to replace.

The cartridge may be referred to as the lower compartment. A cooling device is typically used to remove heat from the cartridge. A cooling device may remove heat from the cartridge in a number of different fashions. In one aspect, a fluid circulation system in the base unit circulates fluid into the treatment head to cool the cartridge. Thermal regulation of the cartridge can be important because the transducer assembly inside the cartridge may generate a significant amount of heat, which can adversely affect the reliability of the transducer in the cartridge and/or become uncomfortably hot next to a patient's skin. When the therapy head body is connected to the cartridge, the treatment head is whole. The cartridge comes in multiple embodiments, and the upper compartment comes in various embodiments to adapt to the cartridge. Alternatively, the cartridge comes in multiple configurations to adapt to various shapes and design embodiments of the therapy head body. In one aspect, the cartridge is disposable.

The various descriptions for the cartridges are generally interchangeable. Typically these include several common features such as: designed to be removably engaged to the upper section or therapy head body. The cartridge defines an ultrasound chamber that contains an ultrasound transducer. The chamber is typically a sealed enclosure that is generally liquid tight. Although the chamber is often described herein as being fluid filled or liquid filled with a coupling fluid, it is not necessary that the sealed fluid enclosure contain any particular fluid, but instead fluid is not leaked when put into the sealed fluid enclosure (ultrasound chamber). In several embodiments, one of several fluids are selected as being used as the coupling fluid, and these are aspects of the invention (being "dry" or not liquid filled, alternatively being "wet" when one or more of the selected liquids is used in the ultrasound chamber).

The use of the term "ultrasound chamber" should not be interpreted as limiting the scope of the disclosure to ultrasound energy being strictly confined to the chamber. The chamber is where the ultrasound transducer resides, with the specific intent in most embodiments that ultrasound energy will radiate out of the chamber when the device is in operation. The cartridge interior defines the ultrasound chamber, which is also a sealed enclosure that is generally fluid tight.

In an embodiment, the transducer assembly is typically contained in a sealed enclosure filled with an appropriate ultrasound coupling medium, such as degassed water. The enclosure may be water tight. The enclosure may be made of plastic or other suitable material, and may have a lining on the interior of the compartment to prevent gas from seeping into the sealed enclosure and entering the degassed water. The lining can be, for example, a sputtered metal layer, such as titanium. The enclosure has an acoustic window in all embodiments, which allows for an acoustic beam path for the transmission of ultrasound energy from the enclosed transducer to outside the cartridge. In embodiments that may use a metallization layer or sputtered metal lining, the acoustic window may also be treated with such metallization or sputtered metal lining. The metallization layer or sputtered metal material would form a thin enough layer so as to permit the transmission of ultrasound energy from the cartridge. The

transducer assembly is mounted to a mechanical arm or linkage that is able to engage a counterpart in the upper compartment. The upper compartment has an actuator assembly that moves the transducer assembly in the sealed enclosure by engaging directly (or indirectly) a control arm attached to the transducer assembly. The cartridge usually has a fluid tight interface built into that portion of the cartridge that engages the control arm extending down from the upper compartment. When the upper and lower compartments are properly connected, the control arm from the upper compartment engages a receptacle in the fluid tight interface. The interface may be a spherical ball with an O-ring seal under pressure, a boot or other equivalent structure. When the control arm of the upper compartment is moved by the actuator assembly, the transducer assembly in the lower compartment moves in a predictable fashion. The system controls the movement of the transducer assembly by controlling the motion of the control arm.

Electrical connections are usually provided either through the control arm (as in a hollow arm with electrical signal paths running through there), or through a separate electrical plug/socket in the interface between the upper and lower compartments. The electrical interface between the upper and lower compartments may be within the confines of the physical volume where the two compartments are joined together, or it may be an electrical plug/socket interface outside the confines of the mechanical connection. The electrical interface can provide power and timing control to the transducer assembly to control the acoustic output, as well as power one or more of a variety of sensor elements in the lower compartment that may be used to measure fluid temperature, pressure, dissolved gases and/or movement of the transducer assembly during a procedure.

In an embodiment, the cartridge can be sealed, so that a liquid within the cartridge is degassed. A metallization layer can help prevent gas leakage into the cartridge. Since the cartridge can be sealed, any heat build up in the cartridge may pose problems for the operation of the treatment head, and/or be uncomfortable to either the user and/or patient. If heat accumulation occurs, cooling the cartridge may be necessary.

In an embodiment, a transducer cartridge as described herein includes a thermally conductive plate or a heat transfer plate incorporated into the lower compartment. The lower compartment (cartridge) may have a plate in direct contact with the fluid sealed within the cartridge. In one aspect, the heat transfer plate coincides with the surface used to at least partially engage with the upper compartment. This allows heat absorbed by the heat transfer plate to at least partially radiate the heat into the upper compartment.

In an embodiment, the upper compartment has a heat exchanger in the form of a heat absorption component adapted to work with the heat transfer plate in the lower compartment. The heat absorption component of the upper compartment and the heat transfer plate of the lower compartment do not need to be the same physical size or foot print, so long as they operate to transfer heat as necessary out of the cartridge. The heat absorption component takes heat away from the cartridge through the heat transfer plate. Once heat is transferred from the heat transfer plate to the heat absorption device, the temperature in the cartridge is reduced. This heat transfer can be done continuously to set the temperature of the fluid within the cartridge, or periodically based on need. For instance, the heat transfer function may be set to automatically operate if a temperature sensor in the cartridge detects the fluid temperature exceeds a preset threshold range of about one (1) to thirty seven (37) degrees centigrade. In an embodiment, the threshold range may be narrowed to about five (5) to eighteen (18) degrees centigrade. In another embodiment, the fluid temperature may be adjusted to assist with numbing the skin of a patient by chilling the skin. The fluid temperature may be lowered to about one (1) to seven (7) degrees centigrade.

In an embodiment, the heat absorption component is a thermoelectric device, like a layer of thermal electric chips (TEC). The layer of thermal electric chips may be a single large chip, or a group of chips laid out next to each other to form a grid of chips. TECs produce a thermal gradient between the two faces of the chip when an electric current is introduced to the TEC. The cool side of the chip faces the heat transfer plate of the cartridge, while the hot side of the chip(s) face away from the lower compartment.

Heat is drawn away from the thermal electric device layer by using a heat sink attached to the thermal electric device layer. The heat sink may be a fluid filled bath having a chilled fluid circulated through it (e.g. from the fluid circulation system described in one aspect herein). The heat sink may also be a highly conductive thermal material (like copper or aluminum) formed into an air cooled device. If air cooled, a small fan may be included in the upper compartment for continually moving air across the heat sink. The upper compartment would further have both air inlet and exhaust vents for drawing in cool air and venting warm air.

In an embodiment, the heat absorption component is itself one of the above mentioned heat sinks (liquid filled bath or air cooled heat sink). In this embodiment the heat transfer plate is still formed into the cartridge, however instead of using a thermal electric device layer to remove heat from the cartridge, a heat sink is used. A fluid heat absorption layer may used and supplied with a chilled fluid from the cart. Activation of the heat absorption component may be preprogrammed for a variety of situations, such as when the fluid temperature of the cartridge exceeds a certain value or to maintain a certain temperature in the cartridge.

In an embodiment, the heat transfer plate of the cartridge may be replaced with a heat exchanger within the sealed fluid enclosure of the cartridge. Inside the cartridge, a heat conducting pipe is positioned within the cartridge so as to maximize the surface area of the heat exchanger (and thus maximize the thermal transfer area) while avoiding that volume of space within the cartridge needed for the transducer assembly to move freely. The heat exchanging pipe may be made of copper, aluminum, stainless steel or other materials (including plastic) so long as the tubing is sufficiently thin walled (thermally conductive) to allow heat transfer from the cartridge environment into the fluid in the heat exchanging pipes. The heat exchanger should also avoid interfering in the broadcast of ultrasound energy from the transducer through the transmission window. The heat exchanger may be a coil arranged in a serial configuration (as in a continuous winding of the coil), a parallel configuration (as in two or more pipes arranged in parallel alignment and fed from a single input, and drained from a single output), or a winding configuration (a mix of serpentine and/or straight paths) and any combination of these configurations are equally usable as a coil heat exchanger. In another embodiment, the heat exchanger may be a sealed plate with either serial or parallel water paths integrated into the sealed plate so as to function similar to a coil or pipe arrangement.

In one aspect the heat exchanger is liquid filled, however it is not necessarily the same liquid used in the fluid tight sealed enclosure of the cartridge. This allows the liquid in the heat exchanger to be circulated with the liquid from the fluid circulation system without compromising the structural and isolation integrity of the degassed liquid volume sealed within the cartridge. Once again the fluid in the heat

exchanger is circulated with chilled fluid from the fluid circulation system and is activated on demand based on either preprogrammed parameters or user command. Note the fluid circulation system in any of the embodiments described herein may be set to "Always on" so that liquid circulation is always occurring. Chilling of the liquid circulating in the circuit may similarly be set for "always on." Because the liquid circulation fluid is separated from the liquid sealed within the cartridge, degassing is not required of the fluid in the cart/fluid circulation system. In an embodiment, the cartridge may be filled with a non-liquid fluid, such as a gas prior to actual use, and filled with a static coupling liquid just prior to use.

Various coupling and cooling fluids are used in or with the various embodiments and aspects described herein. The coupling and cooling fluids used may be similar in composition and treatment, or they may be highly variable. In one aspect, the coupling fluid used in the cartridge may be degassed water. Water degassed to less than 12 ppm of dissolved oxygen may be used as a coupling fluid inside the cartridge. In another aspect, the level of oxygen in the degassed water is about 8 ppm and in another aspect the level of degasses oxygen may be about 5 ppm or less. In another aspect, the coupling fluid inside the cartridge may contain additives to extend the life of the cartridge (such as a biocide to increase the shelf life) or other additives that may improve the device performance or improve shelf life. In an aspect of the invention, the use of a metallization layer or sputter metal material promotes the shelf life of the cartridge relating to extending the duration in which degassed water may maintain the low level of dissolved gasses within the cartridge. The level or amount of metallization needed may be derived using the formula wherein a thickness of the metallization layer is less than X, where $X=[((\alpha-0.09)*1000)/0.03]+500$, with X being the metallization layer thickness in Angstroms, and α being a maximum acceptable acoustic attenuation in dB in a transmission window.

In another aspect, the coupling fluid inside the cartridge may contain various concentrations of salts. A salt solution inside the therapy head should have sufficient ultrasound transparency to allow the system to broadcast the desired amount of energy. A salt solution helps to prevent gas absorption in the solution as well, and may reduce the possibility of producing cavitation or micro streaming events within the cartridge. The salt concentration will depend on the kind of salt used, and the desired fluid characteristic the salt concentration can provide. For the purposes of maintaining a degassed coupling solution in the cartridge, a salt solution and/or a metallization layer can be used.

In one non-limiting example, a calcium chloride (CaCl) salt was added to water for use as a coupling solution inside the cartridge. Increasing the CaCl concentration range to about ten (10) percent by weight to about twenty one (21) percent by weight to help reduce the incidence of freezing (by lowering the freezing point of the water) and reducing the likelihood of cavitation (by preventing gas bubble formation during operation of the ultrasound transducer) while maintaining a desired transparency of ultrasound energy through the salt solution. The level of CaCl may be increased or decreased as desired, and other salts probably may be used to produce a similar effect.

The cooling fluid used inside the ultrasound system may be water in an embodiment. The cooling fluid generally has a high thermal absorption capability, such as water, or a water mixture with other chemicals. Chemicals that may be used include a biocide (to prevent bacterial growth in the fluid circulation system), a chemical additive (for system detection purposes) or other ingredients that may increase the fluid system performance or longevity.

Outside the therapy head and cartridge, another coupling solution can be used to couple ultrasound energy between the medical system and the patient. In an embodiment, this coupling solution may be a water solution that is ninety-nine percent (99%) pure water, with less than one percent (1%) of impurities (excluding dissolved or suspended gases). In another embodiment, the patient side coupling solution may be a light mineral oil or other fluid having similar viscosity characteristics of water. An aspect of the system of the invention is to use a coupling solution outside the body that is drawn from the same reservoir as the cooling liquid of the fluid circulation system. In this aspect, the liquid is circulated from the base unit to the therapy head body, and then dispensed from the therapy head body onto a patient's skin.

In an aspect of the system of the invention, fluid from the fluid circulation system flows directly into the sealed fluid enclosure of the cartridge. In this embodiment, the cartridge is not sealed with a degassed fluid. Instead once the cartridge is connected to the upper compartment, the cartridge is flooded using fluid from the fluid circulation system. In this embodiment, a degas unit may be used to reduce the dissolved gas level in the fluid prior to treatment. In one aspect the fluid may be degassed down to about five (5) to ten (10) ppm or lower dissolved oxygen (oxygen being used as a common meter for all other dissolved gasses based on proportion of gas dissolution). A chiller may also be used to cool the water in this embodiment. No drip fluid connectors may be used between the cartridge and the treatment head and/or circulation system to reduce liquid leakage during cartridge replacements.

In an embodiment, the treatment head may be designed using the smaller size and components of the system described above, but retain a removable transducer cartridge that leaves the transducer assembly removably connected to the upper compartment. In this embodiment, the system replicates the process of draining the fluid from the treatment head by evacuating the fluid chamber of the treatment head. The user then removes the transducer cartridge and replaces the transducer. The system then refills the fluid chamber inside the treatment head. The fluid in this embodiment also requires degassing. A degas device for use with these embodiments is provided herein. The degas device is connected to the fluidics system in the base unit, and utilizes a single pump to both move the fluid through the system, as well as force the fluid through a chamber for removing dissolved gasses. To reduce liquid spillage during cartridge replacement, "no drip" fluid connectors may be used, which shut off the liquid supply on the inlet and outlet liquid lines when the cartridge is replaced.

The degas unit according to this embodiment is a system for separating gas from a gas-containing liquid. The degassing system includes a flow restriction component in fluid communication with a supply of the gas-containing liquid, a pump in fluid communication with the flow restriction component, a separation chamber in fluid communication with the flow restriction component through the pump, one or more gas outlet(s) in fluid communication with the separation chamber, and a degassed fluid outlet in fluid communication with the separation chamber. The pump is configured to draw a flow of the gas-containing liquid through the flow restriction to create a solution of liquid with gas bubbles. The separation chamber is configured for gravity induced separation between the gas bubbles and the liquid. In this embodiment, gases are drawn out of solution by pulling the liquid through a small orifice. As the liquid escapes the orifice it experiences

a region of negative pressure causing bubbles to form. The bubbles and liquid flow through a pump and into a separation chamber. The separation chamber is under positive pressure to slow down the escape of the gas bubble and liquid solution through the gas outlet(s). The separation chamber is placed within a ventilation chamber that is also under positive pressure. As the gas and liquid solution exit the separation chamber and enter the ventilation chamber, the gas bubbles float up, and the degassed liquid is pushed down through a liquid outlet duct.

In another embodiment, a system for separating gas from a gas-containing liquid is provided. The degassing system may include a pair of degas filters arranged serially. A liquid may be drawn through a flow restriction component to produce gas bubbles. The liquid is then pushed through a first degas filter, where gas bubbles are vented out. The liquid continues to a second gas filter that has a vent line connecting to the liquid line just prior to the intake section of the pump. The vent line provides a vacuum on the second gas filter so that dissolved gasses may be drawn out of solution and vented out of the liquid. The liquid then can be used in a fluid circuit calling for degassed, or reduced dissolved gas, liquid. The liquid circulates back into the degas system near the pump intake. The degas system may include a reservoir, in which case the liquid circuit return may flow into the reservoir.

In another embodiment, medical ultrasound systems are provided. The medical ultrasound systems include an ultrasound therapy head and a degassing system. The ultrasound therapy head includes an ultrasound transducer that is at least partially surrounded by a coupling fluid. The degassing system is typically located in the base unit and incorporated into the liquid circulation system. A liquid circuit pumps liquid from a reservoir, through a degas device and to the therapy head so as to supply degassed coupling fluid to the therapy head. In one aspect, the degassing system includes a flow restriction in fluid communication with a supply of coupling fluid, a pump in fluid communication with the flow restriction, a separation chamber in fluid communication with the flow restriction through the pump, a gas outlet in fluid communication with the separation chamber, and a degassed fluid outlet in fluid communication with the separation chamber. The pump can be configured to draw a flow of the coupling fluid through the restriction to create a solution of coupling fluid with gas bubbles. The separation chamber also or alternatively can be configured for gravity induced separation between the gas bubbles and the coupling fluid.

In an embodiment, a fluid coupling device adapted for use with an ultrasound treatment head is provided. A treatment head like any described herein or being substantially equivalent to such a component/device, may be equipped with a coupling fluid dispenser. The dispenser draws from the fluidics system of the ultrasound system for fluid. The liquid used as a coolant in the treatment head, and as a heat sink for the ultrasound transducer, may also be used to couple the treatment head to a patient body by dispersing it on to the patient. This is achieved by having a separate fluid conduit from the treatment head, to a volume of space outside the treatment head. The conduit may be under additional pressure from the fluidics system normal pressure, or it may be the same or less pressure than the fluidics system. The fluid drawn from the fluidics system is dispensed on a patient body prior to placing the treatment head on the skin surface. The fluid may be sprayed, sprinkled, dropped, or in any fashion dispersed over the patient skin surface prior to treatment. The fluid dispersion may be through an aerosolizer, mister or other dispensing mechanism. In one aspect the dispensing of the fluid is controlled by the user so the fluid may be accurately delivered and evenly distributed on the skin surface, and such delivery and distribution is on demand through an actuation device such as a button, trigger, or other mechanical/electromechanical method. The system may also control the duration of the spray to optimize the application of the fluid for proper coupling of the treatment head to the patient, and/or to avoid inadvertent draining of the tank.

Several embodiments of using the system on a patient for body sculpting are now described. In one embodiment a template for creating treatment lines on a patient body is provided. The template can be made of, e.g. a disposable, light weight material that is safe for clinical use. Any of a variety of plastic materials, bio-polymers, or other suitable material such as approved and/or safe for clinical use may be used. The template has at least one straight line drawn on it, and typically has multiple slot shaped apertures in the template that run perpendicular to the drawn straight line. In use the template is placed on a patient body, such as the abdomen or flank region, and a user takes a marking pen or similar device and creates lines on the patient body through the slot shaped apertures. The user then rotates the template 90 degrees (or an approximation thereto) so the template straight line is laid over one of the previously drawn lines on the patient skin. The user then draws additional lines through the slot shaped apertures so as to create a square grid approximately the same size as the slot shaped apertures of the template. The user repeats this process until the entire surface area desired to be treated is covered with grid lines.

The treatment head has alignment features on the sides of the treatment head. In one aspect the alignment features are on all four sides of the treatment head. In another aspect the alignment features are on adjacent sides or opposite sides. The alignment features are used to "eye ball" the position of the transducer over the drawn grid lines by placing the alignment features over the drawn lines. If only two alignment features are used, the features are either on opposing or adjacent side walls of the treatment head, and the treatment head can be aligned by using a single straight line, or the "right angle" created by two intersecting lines. This allows the placement of the treatment head on the intersection of the drawn grid lines and using the midlines as the reference marker(s) for treatment.

If a complete grid is drawn on the patient, then the spacing of the lines of the grid do not have to line up with the size of the treatment head face (as long as they are smaller than the treatable area of the treatment head if spaces between sites are not desired). In effect the alignment of the therapy head is placed on the center lines of the horizontal and vertical lines of the grid rather than centered on the area encompassed by the lines. This allows for a given treatment head with its physical treatment head area to not have to match the treatment area the user may want. In other words, a given treatment head area (size) can be used with multiple grid size templates based on the area and shape of the desired treatment region.

If we allow variable site areas and supply various templates to mark the lines, a verification feature is need to minimize the chance a user might make an error by marking one size grid on the patient and then setting up the system to treat a different size site. To minimize this chance a feature the system can read can be embedded into the template. In such an embodiment, after the user marks the patient, the user presents the template to the system to have it read the marked site area to set up the machine to match the patient markings. This feature could be implemented with, e.g., an embedded barcode on the marking template or with radio frequency identification (RFID) type tags embedded into the template. In either case

the user would "scan" the template into the system to allow entering the treatment screen to set up the system for the correct site area. A scan of the template refers to reading information from the template, such as a bard code, radio frequency identification (RFID), electronic code or other information containing device on the template.

In an embodiment, the system has a "scan" capability able to record the position of the grid lines on the patient body. The system ability to scan with reference to reading grid lines or the patient body may be taking a picture of the treatment area and using image recognition to find the lines on the patient body. Alternatively or in addition, the system may record the position of boundary lines created in the patient body that provide demarcation of safe treatment areas and non-treatment areas. Creation of the boundary lines is typically done prior to placing the therapy head on the patient body. Once the user has selected a particular treatment site (for instance near the edge of the treatment surface), the user may subdivide the area of the treatment surface of the treatment site under the therapy head into one or more treatment areas and one or more non-treatment areas. The system would then either create the treatment area control commands or use pre-defined tables generated off line to send to the control hardware to treat the user defined areas while avoiding the areas designated as a non-treatment area. In this embodiment, the display acts as a drawing tablet allowing the user to display either the actual grid line on the patient surface, or a representation of the gridline (in which case no system scanning of grid lines on a patient body capability is needed). The user can create dividing boundaries, either on the patient's skin or on the visual display that designated one or more sections as either safe for treatment or conversely, as non treatment regions. The image displayed can clearly indicate which of the sections, demarcated by the drawn lines, are to be used for treatment and which are not to be used for treatment. The boundary indications are not limited in shape, size or number. Indication of treatment safe or non treatment regions either on the display or on the patient may be made by using different color or pattern markers, designating the regions as treatment or non-treatment on the display. This application is helpful to treat around the umbilicus (belly button) and areas where the area of treatment may be smaller than the area of a complete grid square (such as under the cheek, arms or other spots of relatively low subcutaneous adipose tissue accumulation). The system has an enhanced software capability to convert the user defined safe and no treatment zones into operational instructions for controlling either the movement of the transducer assembly so the transducer does not move over the non-treatment areas, or a transducer control feature that allows the transducer to stop broadcasting ultrasound energy as it sweeps over the non-treatment areas. The display and subdividing of the treatment surface could also be applied to more than one site at a time, up to the entire treatment surface.

Generally, treatment of the body to produce the desired body contouring results, utilizes sufficient energy to produce a therapeutic effect. An Energy Flux value between 35-460 Joules per square centimeter at the skin surface (J/cm^2) is generally required. The energy flux (EF) value may be derived using the formula:

$$[(p)\times(l/v)\times(dc)\times(nl)]/(sa)$$

wherein
p=power,
l=line length,
v=velocity,
dc=duty cycle,
nl=number of lines
and
sa=scanned area.

The formulation provided provides for a calculation when the transducer is moving continuously while applying ultrasound energy. Alternatively for a treatment program where the transducer is not moving between therapy applications, the EF can be calculated using the following modified EF equation.

$$EF=[(p)\times(t)\times(dc)\times(ns)]/(sa)$$

wherein
p=power,
t=on-time per lesion,
dc=duty cycle,
ns=number of lesions,
and
sa=scanned area.

Further details are provided on in co-pending U.S. patent application Ser. No. 11/414,080 entitled Apparatus and Methods for the Destruction of Adipose Tissue, herein incorporated by reference.

In the description of the drawings below, multiple exemplary embodiments of the invention are described. For purposes of explanation, specific configurations and details are set forth in order to provide a thorough understanding of the embodiments. However, it will also be apparent to one skilled in the art that the present invention may be practices without the specific details. Furthermore, well-known features may be omitted or simplified in order not to obscure the embodiment being described. To preserve ease of reading, parts are labeled with the same number where they serve the same function from embodiment to embodiment. For instance, no less than five different versions of a cartridge (part number 600) are herein described. Each transducer cartridge is identified as part 600 even though numerous embodiments are described, with many more equivalents not described, but will be suggested or apparent to the reader skilled in the art. The use of a common numeral for the many parts detailed herein is not to be taken to indicate that the part is exactly the same physical part from embodiment to embodiment, but rather has the same function from described embodiment to embodiment. Items with the same part numbered are not necessarily structural equivalents, since various embodiments may be highly divergent physically from one another.

The nature of the systems and apparatus described herein are those of electronic devices. There are electrical signals being sent from various parts or sub systems to other parts and sub systems, as well as electrical power sent to those same parts (components) and sub systems. The transfer of electrons between any component with any other component is referred to herein as electrical communication. Electrical communication may be signals or power, used to direct, sense, control or simply turn on/off a component. The passage of electrons through any intended conduit for electrons, regardless of voltage, amperage or wattage is also electrical communication. Electrical communication includes signals sent and received by wireless systems or methods if incorporated to any part of the disclosure herein.

Furthermore, the nature of systems of the invention as described in the many embodiments involves the use of various liquids. These may be cooling liquids, coupling liquids, storage liquids or liquids used for any other purpose. Supply or transportation of any of these liquids from one of the various components to another component designed or intended to receive, use, transfer or touch any of these liquids is referred to herein as fluid communication.

A system of the prior art is shown in FIG. **1**. The system P**10** has a cart base P**12** with a mechanical arm P**14** supporting a therapy head P**20** with a removable cap P**22**. The system also has a display screen P**16**. The entire system P**10** weighs in excess of 300 pounds (136+kg), and stands about 1.3 meters high, about 1.1 meters deep and about 62 cm wide. Individually the therapy head P**20** weighs about 3.5-4.0 kg, and the arm P**14** weighs about 32 kg. All weights excluding any fluid or liquid that is normally required for the system to operate. The size and weight of the system makes it difficult to transport, and it can be cumbersome and unwieldy.

An embodiment of the present invention is now shown in FIGS. **2**-**4**. A medical ultrasound system **100** is shown having a display **102**, a base/base unit or main body **130** with a front face **108** with one or more apertures **118** therein. The apertures **118** are receptacles for receiving a therapy head **500**. The front face **108** may have one or more apertures **118** for a corresponding number of therapy heads **500**. The main body **130** includes the front face **108** and a back face **132** (See FIG. **5**). The main body **130** is attached to a base **106** which is fitted to receive casters **104**. The base may be integrated into the main body, or separated as shown. The system **100** is shown having a main compartment **112** behind the face plate **108**. The design of the system **100** can be such that the front face **108** is kept clear for aesthetic appearance. The location of the main compartment **112** containing system electronics is not crucial to the layout of the main body **130**. The system **100** may include a handle or pair of handles **110** in order for a user to grasp the system and maneuver it on its castors **104**. The system **100** can include one or more input jacks **120** for a foot pedal switch (not shown). A cable **116** connects the system **100** with a treatment head **500**. The treatment head(s) **500** may rest in the treatment head apertures **118** where the cables **116** are plugged in, however it is not a limitation of the present invention that a treatment head must be inserted into the same receptacle as the cable which connects it to the main body **130**. Indeed treatment heads **500** may be positioned in any available receptacle **118** regardless of whether they are plugged in to a cable or not.

Alternatively the treatment heads **500** of the medical ultrasound system **100** need not be stored in the receptacles **118** of the system **100** when not in use. The treatment heads **500** may be disconnected if desired and stored anywhere at the user's discretion. A single treatment head version is shown in FIG. **3**. Where multiple treatment heads **500**A, **500**B are shown, there can be a corresponding number of receiving apertures **118**A, **118**B and cable plugs **122**A, **122**B (See FIG. **4**). In an aspect of the treatment head, the treatment head may be about 80 mm on a side and have a generally rounded rectangular or circular foot print. The treatment head may be about 150-180 mm in height and weigh about 200 to 500 grams. In another aspect the treatment head may weigh between 300 and 400 grams, and in another aspect the treatment head may weigh about 330-360 grams.

A profile view of the main body **130** is shown in FIG. **5**. The display **102** is supported by a neck **126** which can be folded down. The display **102** is also mounted to the neck via a moveable joint, the joint may allow the screen to tilt, rotate or swivel. The apertures **118** for the treatment heads have a catch or back plane **124** to prevent the treatment heads from sliding completely through the apertures. In one aspect the receptacles are formed to provide a snug fit for the treatment heads so the treatment heads are securely positioned on the main body when stored there. The system has a back plate **132**, and main compartment **112** has a cover **134** that is removable. The base unit may weigh about 25-40 kilograms (kg), and in various aspects may weigh 28-35 kg (without liquid). The base unit may stand about 1.4 meters (m) in height, and be about 50-75 centimeters (cm) in width and depth. These dimensions do not count any cabling or peripherals that may be connected to the base unit.

FIG. **6** provides a transparent view of the major system components of the main compartment **112** of an embodiment of the system. The bulk of the system electronics **200** are mounted within the main compartment **112**. The internal electronics are supported by a set of structural supports **214**, **216** that anchor the electronics in place while providing the orientation for air flow through the compartment. An air circulation system **202** is provided using one or more cooling fan(s). Air is drawn in by the fans and flows past a fluid chiller unit. Air flows into a cavity near the base of the unit, and then is channeled into one of two paths. One path goes through the main circuit board cage **212**, along airflow path **254**. The other paths flows through the power supply **204**, along flow path **254** to help cool the power supply **204**. The power supply may be positioned below the base **106**, with the flow path **254** through the power supply adjusted to flow through an aperture (not shown) in the base **106**. An Ethernet port **206** is provided to allow the system **100** to connect to an LAN or internet portal. The card cage **212** may have a back plane **210** that provides both structure to the card cage, and bus or plugs for system components. In one aspect the back plane is eliminated (excluded) by using a pair of printed circuit boards adapted to interface directly with each other. A fluid circulation system **208** is stacked on the support strut **216**. The fluid circulation system has at least one pump and filter set **220** for moving the fluid through the system, and filtering the fluid to preserve fluid quality. The fluid for the system (not shown) can be a liquid having low viscosity and high thermal capacity. Liquid water can be used as a fluid for the circulation system. More particularly the fluid may be degassed liquid water, chilled liquid water. Other suitable fluids can be used. Alternatively, part or all of the air intake may be used to cool a water storage tank, or water cooling system.

A profile view of the main compartment system electronics of an embodiment of the system is shown in FIG. **7**. The airflow path of the two air flow ducts are shown by the dotted arrows. The first air flow path **252** cools the card cage. The first duct draws air through the system cover, and drives the air into a hollow space below the card cage **212**. The hollow space is defined by the support strut **214** and the components stacked on the strut **216**. The card cage **212** is designed to orient cards in a generally vertical alignment with air flow space between the cards. Air is pushed into the hollow space, and drawn up into the card cage by thermal convection. Hot air from the card cage rises and flows out through a vent in the compartment cover. The second air flow path **254** helps cool the power supply **204**. Air is drawn into the system through an input pathway **250** in the air circulation system **202**. Once the air circulation system is active, the interior space of the main compartment becomes slightly pressurized. The power supply **204** has a fan for drawing in air from the system, while the card cage relies on forced convection to draw cool air from the bottom, while warm air rises out the top flow path **252**. Alternatively the card cage may have a fan for drawing cool air into the card cage, or for venting warm air out through the exhaust vent. If the base has a water chiller, then the air flow can pass over a heat exchanger for the water chiller in addition to the other components described above. The air can flow over the various components in any suitable order.

A perspective view of the main compartment **112** with cover of an embodiment of the system is provided in FIG. **8**. The back plane of the card cage **212** is shown extending from

the top of the compartment. The front face **108** and back face **132** are not shown in this view.

One component of the fluid circulation system **208** may include a degas device used to extract dissolved gasses from the fluid in the fluid circulation system. The inclusion and use of a degas device may generally be avoided.

FIG. **9** shows a degassing system **340** in accordance with an embodiment. The degassing system **340** includes a retaining wall **342** connected with a base **344** that is below retaining wall **342**. The combination of the side wall **342** and the base assembly **344** form a liquid reservoir **346** that is liquid tight. A separation device **348** is disposed within the reservoir **346** and connected with the base **344**. The reservoir **346** holds a gas-containing liquid **350**, such as those liquids described herein, that are to be degassed. The base **344** includes a supply duct or conduit **352** that can be used to add or remove the gas-containing liquid **350** to or from the reservoir **346**. The base **344** may also include a separate drain line. The base includes a degas fluid carrying duct or conduit **354** for drawing degassed fluid from the ventilation chamber **366**. The base **344** includes a liquid flow restriction component or device **356**, a first fluid channel **358**, a pump **360**, and a second fluid channel **362**. The flow restriction component **356** is located at the bottom of the fluid reservoir **346** and is in fluid communication with the reservoir **346**. The first fluid channel **358** is positioned between the flow restriction device **356** and the pump **360** and places the flow restriction device **356** in fluid communication with the pump **360**. The flow restriction device may be a nozzle, valve or other device that restricts the flow rate sufficiently for liquid flow to be sucked through the flow restriction device by a negative pressure created by the pump **360**. By drawing water through the flow restriction device **356**, dissolved gasses are brought out of solution by creating a negative pressure (about 1-2.5 PSI absolute) inside the first fluid channel **358**. The fluid with air bubbles then passes through the pump **360**, the second fluid channel **362**, and into the separation chamber **382**. Gas bubbles pass from the fluid chamber **382** into the chamber **366** and float upward, while degassed fluid is available to be drawn out through conduit **354**. In one aspect the separation chamber is under positive pressure (approximately +10-20 PSI gauge pressure) forcing gas bubbles through the exit port **372**. A pressure transducer (not shown) can be located to monitor the pressure within the first fluid channel **358**. The second fluid channel **362** is positioned between the pump **360** and the separation device **348** and places the pump **360** in fluid communication with the separation device **348**.

The separation device **348** includes an outer housing **364** that defines a separation or degas chamber **366**. Outer housing **364** includes at least one side wall **368** connected with the base assembly **344** and at least one sloped upper wall **370** connected with the side wall **368**. The sloped upper wall **370** is connected with an exit port **372** that is in fluid communication with the separation chamber **366**. The exit port **372** is connected with, and is in fluid communication with, a gas bubble exhaust **374**. The gas bubble exhaust **374** has an upper portion **376** that is disposed above an exit port **378**. Exit port **378** places the exit port **372** in fluid communication with the fluid reservoir **346**.

Disposed within separation chamber **366** is a distribution manifold **380** that is connected with the base assembly **344**. The distribution manifold **380** defines an inner chamber within the degas chamber **366**. The combination of the distribution manifold **380** and the base assembly **344** defines the inner chamber **382** that is disposed above, and is in fluid communication with, the second fluid channel **362**. The distribution manifold **380** includes one or more orifices **384** that place the inner chamber **382** in fluid communication with the separation chamber **366**. Orifices **384** are located in the upper portion of the distribution manifold **380**.

FIG. **10**A illustrates the operation of the degassing system **340** of FIG. **9**. Gas-containing liquid **350** is drawn from the fluid reservoir **346** through flow restriction device **356** into the first fluid channel **358** by the operation of pump **360** such that gas dissolved within the liquid comes out of solution and forms gas bubbles. The flow of fluid through the pump generates a strong negative pressure which reduces the pressure level within the first fluid channel **358** relative to the fluid reservoir **346**. The flow restriction component can be about a 0.039 inch diameter orifice (such as a drilled hole, nozzle or similar component). The pressure drop helps to bring dissolved gas out of solution thereby forming bubbles in the fluid (**361** in FIG. **34**). In some embodiments, the flow restriction is chosen and the flow rate is selected and/or controlled to reduce the pressure in the first fluid channel **358** to between about 1.0 to about 2.5 PSI absolute. When the gas-containing liquid is water, further reduction in the pressure (e.g., below 0.9 to 0.95 PSI absolute) in the first fluid channel **358** may cause cavitations, which can damage system components such as the pump **360**. A pressure level of above about 1.0 PSI absolute has been found to be a good comprise between achieving maximum degassing while maintaining a pressure margin so as to generally avoid cavitation. A balance of negative pressure in the first fluid channel **358** and pump integrity can reduce or prevent damage to the system and/or pump. The pump flow rate is not fixed, but depends on the relation of the size of the flow restriction device **356** and the desired level of negative pressure. A weaker pump may be used with a smaller flow restriction, while a stronger pump is typically desirable with a larger flow restriction diameter device. Balancing pump capability and restriction size can also be matched with the physical integrity of the pump to withstand cavitation damage. The flow restriction typically generates turbulent flow, which may further encourage the formation of gas bubbles. A pressure transducer can be integrated into the first fluid channel **358** and the output from the transducer used to regulate the speed of the pump **360** so as to maintain the desired pressure level within the first fluid channel **358**.

The liquid and gas bubbles are then transferred to the separation device **348**. The pump **360** transfers the liquid and gas bubbles from the first fluid channel **358** to the inner chamber **382** of the distribution manifold **380**. From the inner chamber **382**, the liquid and gas bubbles are transferred to the middle portion **386** of the separation chamber **366** through the orifices **384**.

The separation chamber **366** is configured for gravity induced separation between the gas bubbles and the liquid. The distribution manifold **380** introduces the liquid and gas bubbles in such as way as to minimize the amount of circulation and/or mixing of the previously separated bubbles and liquid within the separation chamber **366**. The orifices **384** are small, thereby inducing slow flow, which reduces the amount of circulation and associated mixing that occurs within the separation chamber **366**. The orifices **384** are located in a middle portion **386** of the separation chamber **366**, which keeps the bubbles from entering a lower portion **388** of the separation chamber **366**. By reducing the amount of circulation and/or mixing, the bubbles, due to their reduced density as compared to the surrounding liquid, can rise towards the top of the separation chamber without being carried lower by downward flow. The distribution manifold **380** introduces the liquid and gas bubbles in the middle portion **386** of the separation chamber **366**, thereby isolating the degassed liquid disposed in the lower portion **388** of the separation chamber

366 by not causing circulation within the lower portion 388. This isolation helps to keep any gas bubbles from being carried into the lower portion 388 so that the degassed liquid extracted from the separation chamber by a degassed fluid outlet 390 can be substantially free from any gas bubbles. The degassed fluid outlet 390 is in fluid communication with the degassed fluid conduit 354, which is used to transfer the degassed fluid from the system.

The rising gas bubbles are removed from the separation chamber 366 through the exit port 372 located at the top of the upper portion 392 of the separation chamber 366. The separation chamber 366 can be configured to direct the gas bubbles to the exit port 372, such as by using conically shaped upper sloped walls 370 in the upper portion 392 as shown. The gas bubbles are forced to the gas bubble exhaust 374, which serves to prevent the surrounding gas-containing liquid 350 from entering the separation chamber 366 through the exit port 372 while the system is operating. The gas bubble exhaust 374 includes an upper portion 376 and an isolator exit port 378. The gas separated from the gas-containing liquid is transferred to the gas bubble exhaust 374 from which it exits at the exhaust exit port 378. The gas bubble exhaust 374 can be any number of isolating devices. The bubble exhaust 378 may be directed downward into the bottom of the reservoir to assist in draining the reservoir when the pump is operated in reverse.

The configuration of the degassing system 340 provides for simplified flow rate control. During operation, the pump 360 can be run at a constant speed or the speed of the pump 360 can be controlled by a closed control loop so as to maintain a desired pressure within the first fluid channel 358. With a flow restriction component 356 of a set size, the resulting pump operating speed will typically not vary to any large extent, which produces a substantially constant flow of liquid and gas bubbles to the separation device. The substantially constant flow of liquid and gas bubbles to the separation device provides a supply of degassed liquid to replace degassed liquid extracted from the separation chamber. As long as the degassed liquid is extracted at an equal or lower rate than it is generated, any excess degassed liquid flows out of the separation chamber via the exit port 372 and the isolator 374 along with the removed gas. For example, degassed liquid can be extracted from the separation chamber at a rate of 300 ml/min while a 500 ml/min flow of liquid and gas bubbles can be supplied to the separation device 348. The extracted degassed liquid (e.g., water) can be circulated for use as a coupling agent in an ultrasound therapy head, such as for use in the lower compartment 320 of the therapy head 318 as shown in FIG. 2.

An inflatable bladder or other pressure regulating device (not shown) can be used to maintain and/or regulate the pressure of the fluid reservoir 346.

In an embodiment, the degas system may use two degas filters in series (FIG. 10B). The degas system utilizes a single pump 1002 to move the fluid through the entire fluidics system, and produce the pressure environments necessary to degas the liquid within the system. The liquid may be contained in a reservoir 1004 and can be drawn through a pump 1002. The liquid then is pushed into a first degas filter 1010 where bubbles are vented to the atmosphere (alternatively the bubbles may be vented into the reservoir, not shown). The liquid then flows into a second degas filter that has a vent line going into the input line that is drawn into the pump. The pump creates a negative pressure (vacuum) in the degas filter 1012 and helps to removed dissolved gases from the liquid. The liquid then goes through a fluid circuit 1006, such as to a therapy head for an ultrasound transducer, or the like. The liquid returns from the fluid circuit 1006 and either goes to a reservoir 1004, or back toward the pump 1002. As the fluid circuit operates, air bubble from the return line, reservoir or vent line 1014 move through the pump and go to the first degas filter 1010, where the bubble percolate and vent out of the degas liquid line. Degassing of the liquid occurs in the second filter 1012 which is under vacuum through the second vent line 1016.

FIG. 11 is a schematic diagram illustrating a degassing system 3100 in accordance with another embodiment. Similar to the degassing system 340 discussed above, the degassing system 3100 includes a flow restriction 3102. The degassing system 3100 further includes a first fluid channel 3104, a pump 3106, a first degas filter 3108, and an optional second degas filter 3110. The flow restriction 3102 is in fluid communication with a source of gas-containing liquid 3112. The first fluid channel 3104 places the flow restriction in fluid communication with the pump 3106. An output of the pump 3106 is in fluid communication with the first degas filter 3108. The first degas filter 3108 includes a gas permeable membrane 3114 that allows the passage of gas while substantially preventing the passage of liquid. A vacuum is required on the gas side of the gas permeable membrane 3114 thereby creating a pressure differential across the gas permeable membrane 3114. The gas side may vent to the atmosphere via a vent 3116 that may include a pressure valve. The optional second degas filter 3110 includes a gas permeable membrane 3120 that allows the passage of gas while substantially preventing the passage of liquid. The gas side of the gas permeable membrane 3120 is vented to the first fluid channel 3104 via conduit 3122.

In operation, a gas-containing liquid is drawn through the flow restriction 3102 into the first fluid channel 3104 by the action of pump 3106, which causes the gas dissolved within the liquid to come out of solution as discussed above with reference to degassing system 340. The generation of the gas bubbles in the degassing system 3100 can be substantially the same as in the degassing system 340 discussed above.

The liquid and gas bubbles are then transferred to the first degas filter 3108. The pressure of the combination of the liquid and gas bubbles within the first degas filter 3108 is greater than atmospheric pressure due to the action of pump 3106. Because the gas side of the gas permeable membrane 3114 is under a negative pressure relative to the combination of the liquid and gas side, causing gas to pass through the filter to the gas side. Gas removed from the fluid in this way may be vented out of the system through a one way valve. The pressure differential serves to force gas from the liquid and gas bubbles side of the permeable membrane to the gas side of the permeable membrane, where it can be vented to the atmosphere or collected. Degassed liquid 3118 exits the first degas filter 3108.

The degassed liquid 3118 exiting the first degas filter 3108 can be further processed via the optional second degas filter 3110 so as to further reduce the amount of gas contained within the liquid. The reduced pressure level within the first fluid channel 3104, together with the pressure of the degassed liquid 3118 within the second degas filter 3110, creates a pressure differential across the gas permeable membrane 3120. The pressure differential serves to force gas from the liquid and gas bubbles side of the permeable membrane 3120 to the gas side of the permeable membrane 3120, where it is transferred to the first fluid channel 3104 via conduit 3122. The additionally degassed liquid 3124 exits the second degas filter 3110.

FIG. 12 is a block diagram of the fluidics subsystem of a medical ultrasound system in accordance with an embodi-

ment. The fluidics system has a pump control **3136**, an optional cooling control **3142**, a filter **3140** and a fluid level system **3134**. The fluid level system **3134** monitors the level of fluid in the fluidics system and ensures sufficient fluid is present for all fluidic system operations. The filter serves to remove particulate matter that might clog or negatively impact the system. The pump circulates the fluid through out the fluidics system. The pump control **3136** may be the same pump used in an optional degassing assembly **3138**. Fluid is moved from the base unit to the ultrasound head **3144**, and generally returns to the base unit in a complete fluid circuit.

The disclosed systems provide a number of advantages. For example, in some embodiments, the disclosed systems can function without a vacuum pump, which avoids the initial and ongoing expenses associated with vacuum pumps (i.e., initial cost of vacuum pump system components and related ongoing maintenance/repair costs). It further allows those systems to operate without the associated components required to maintain a degassed fluid environment for the fluid circulation system, further reducing costs and complexity of the fluidics system.

A cross section of an interface cable **400** in accordance with an embodiment is shown in FIG. **13**, with an alternate embodiment shown in FIG. **35**, the alternate embodiment having similar components. The cable **400** has an outer sheath **402**. This outer sheath may also provide shielding to the cable to prevent EM radiation from the cable, and physically protecting the cable. The outer sheath **402** surrounds a first ring of coaxial cables **404** arranged in a circular orientation and surrounded with an insulation layer **410**. A filler layer **412** in the interior of the interface cable helps with both electrical shielding and water containment in case of a leak from water lines **414**, **416**. The coaxial cables **404** are used to provide drive signals and receive signals to/from each element of an array transducer in the treatment head in real time. If the treatment head does not utilize an array transducer, the coaxial cables **404** are assigned predetermined priority for driving a single element transducer. In the interior there are power lines **406**, **407** carrying voltage from the main system **130** to the treatment head **500**. The power lines **406**, **407** can carry different voltages, while the electrical components within the therapy head **500** draw power based on one of the two voltages. A ground wire **418** is provided and serves as electrical ground return for all the electrical components in the treatment head regardless of the electrical voltage the component requires. Information can be relayed between the system base and the treatment head using two or more twisted pair wires **408**, **420**. A single twisted pair can be used (not shown) by multiplexed communication. In one aspect, the interface cable and the twisted pair wires are EM shielded, to eliminate EM radiation.

Alternatively the interface cable may use two power lines, one for power and the other for ground. In this embodiment, all components within the treatment head would use a single voltage, or have an adapter to allow use of a common voltage. The use of two twisted pair wires are retained for serialization of data from base to therapy head, and therapy head to base (FIG. **34**). Alternatively a third two twisted pair may be used to reset/restart the therapy head by cycling power on and off (not shown).

An embodiment of the treatment head **500** is now shown in FIG. **14**, note the form factor and layout of the treatment head may take many forms. The treatment head **500** has an upper section **510** and a removable lower section **600**. The upper section **510** has an indented grip area **502**, which may be designed for being gripped by left or right handed persons with equal ease. The top of the upper section **510** has a handle guard **504**. The bottom of the lower section **600** has an ultrasound transmission window **602**. Generally the upper section contains a driver, such as a motor drive unit, and a variety of electronics necessary for the operation of the treatment head. The lower section contains an ultrasound transducer. The lower section is considered a "wet" environment, having a fluid surrounding the transducer, to provide an ultrasound coupling medium between the transducer and the transmission window. The fluid in the lower section may be any low molecular weight solution or liquid having the properties of low ultrasound impedance, high thermal mass. The fluid can be, e.g., water. In one aspect, the liquid is water that is substantially degassed, chilled and free of impurities (as described herein). Examples of water solutions for the lower section include, but are not limited to, degassed de-ionized water, degassed distilled water or de-gassed filtered water. In an aspect the lower section **600** is detachable, in the form of a cartridge.

FIG. **15** provides a perspective view of the upper section **510** of an exemplary therapy head **500** with lower section detached. In this view the engagement collar **506** of the upper section is more evident.

An example of one embodiment is shown in FIG. **16**. The ultrasound head **500** has one or more cables **116** extending from it and going to the main body **130**. The upper section **510** has a compartment **522** that typically is dry and houses wires, cables, a motor assembly, and/or other features for a transducer, which is mounted in the lower compartment **600**. The lower compartment **600** preferably contains a coupling fluid, such as degassed water, which allows the transmission of ultrasound energy from the transducer to and through a window **602** located near the bottom of the lower compartment. Disposed within the upper compartment **510** is an actuation assembly **528**. The actuation assembly **528** provides for control over the position/orientation of the transducer **900** located within the lower compartment **600**.

The cable **116** can connect to the top portion **504** of the upper section **510**. A treatment head controller board is positioned within the upper section **510** and receives the inputs from the interface cable **116**. The treatment head control board also has the SERDES chip, and any other electronic components needed for the proper operation of the therapy head. An optional LED or other signal device **512** is provided to indicate the treatment head **500** is active. An optional trigger **514** is provided so a user may actuate an optional coupling liquid applicator device. The top section (the treatment head) has a grip section **502** can be adapted to be held in either a user's left or right hand.

In operation, a technician rolls the medical ultrasound system **100** adjacent to a patient. The technician grasps and moves the ultrasound treatment head **500** into the desired position. The ultrasound treatment head **500** is aligned so that the window **602** is in contact with the patient. The user interface device **102** may be operated to generate an appropriate treatment or diagnostic test. During use, the transducer mounted in the lower compartment **600** generates ultrasound energy, which may be used, for example, for the destruction of adipose tissue, as described in U.S. Published Application No. 2006/0122509, incorporated herein by reference. The actuation assembly **528** can be used to provide for simplified treatment procedures. For example, the ultrasound head **500** can be held in stationary contact with the patient while the actuation assembly **528** varies the position/orientation of the ultrasound transducer so as to apply therapeutic treatment to a local region of the patient using a scan pattern that provides a desired coverage, duration, spacing, etc.

As shown in FIG. **16**, the therapy head **500** includes a lower compartment **600**, or cartridge, and a therapy head body, or upper compartment **510**. Although the upper compartment **510** is described as a "compartment," suggesting a hollow body, the compartment may contain many structures. In an embodiment, the upper compartment **510** houses operational components of the therapy head **500**. The inside of the upper compartment **510** is usually dry and houses wires, cables, a motor assembly, electronics, and/or other features for a transducer **900** (FIG. **17**), which is mounted in the lower compartment **600**. In addition to the transducer **900**, the lower compartment **600** preferably contains a fluid, such as degassed water **604**, used to couple ultrasound energy from the transducer **900** to and through a flexible window **602** located near the bottom of the lower compartment.

The transducer **900** mounted in the lower compartment **600** may take various different forms and, in an embodiment, is movable so that it may focus toward various different locations of the window **602**. An example of a transducer and movement system are described in commonly owned U.S. patent application Ser. No. 12/364,327, filed Feb. 2, 2009, and entitled "Therapy Head For Use With Ultrasound System." Other transducers and/or movement systems may be used. A transducer may also be fixed in the lower compartment **600**.

FIG. **17** illustrates internal assemblies of a therapy head **500** similar to that shown in FIG. **16**. Mounted within the upper compartment **510** is the actuation assembly **528**. The actuation assembly **528** is coupled with an ultrasound transducer assembly **900** by way of a control arm **532**. The control arm **532** may be configured to interface with and pivot within a receptacle **534** that is coupled with a partition that separates the upper compartment **510** from the lower compartment **600**. In one aspect, the lower compartment **600** can be disengaged from the upper compartment **510**. The lower compartment **600** is typically a sealed assembly that contains a coupling fluid, such as degassed water, that is used to transfer ultrasound energy transmitted by the transducer assembly **900**. The receptacle **534** includes at least one fluid seal to prevent fluid from entering the upper compartment **510** from the lower compartment **600** when the two compartments are joined together. The seal may be one or more O-ring(s) around a spherical joint of the control arm **532**. The control arm **532** includes a control arm upper end **536** disposed within the upper compartment **510**. In the position/orientation shown, the ultrasound transducer assembly **900** is shown as transmitting focused ultrasound energy through the window **602** as illustrated by the ultrasound energy profile **610**.

The actuation assembly **528** is operable to move the control arm upper end **536** so as to pivot the control arm **532** within the receptacle **534**. The range of motion of the actuation assembly and the control arm **532** produces a coverage area **610** within which focused ultrasound energy can be directed in a controlled fashion (e.g., by using scanning patterns, scanning rates, energy transmission levels, etc.). When the lower compartment **600** is engaged to the upper compartment **510**, the transducer assembly **900** is mechanically engaged to the control arm **532** through a control arm receptacle **548**. Thus as the control arm **532** is moved by the actuation assembly **528**, the transducer is moved in direct relation to the control arm **532**.

In an embodiment, it is also possible for the receptacle **548** to move in a reciprocal fashion relative to the movement of the control arm **532**. The movement of the receptacle **548** relative to the control arm **532** is merely a design choice feature which may be adjusted according to desire based on the intended range of motion, and adapting any position tracking and/or position sensor information gathered about the position of the transducer assembly **900**.

The actuation assembly **528** according to an embodiment has a modified lead screw **548** (available from Haydon Kerk Motion Solutions, Inc., Kerk Products Division, 1 Kerk Drive, Hollis, N.H. 03049) with a pair of motors **556**, **558** working to drive a carriage nut **546** over the screw rail. The motors **520**, **530** may operate through a set of gears **560** to drive the screw rail. A carriage nut coupler **544** is moved by the actuation assembly **528** to drive the motion of the upper arm **536**. The motion may be direct, reciprocal or any relation suitable for the movement of the transducer assembly **540**. A union joint **535** connects the control arm **536** to the carriage nut coupler **544**.

The lower compartment **600** may also feature a pressure compensator **690** to adapt the fluid pressure in the lower compartment **600** to variations in atmospheric pressure during use or shipment.

A perspective view of the upper compartment **510** or treatment head with focus on the connector for the upper compartment and lower compartment is shown in FIG. **18**. The upper compartment **510** has a recess **554** for mechanically engaging the cartridge. The TEC layer **744** is shown where it will abut the corresponding section of the lower compartment having the riser **772** or heat transfer plate **748**. A control arm **578** for engaging and controlling the corresponding cartridge component for moving the transducer assembly is also shown. An electrical interface **638** is also provided for handling the various electrical interfaces required to properly control the transducer assembly, and monitor any sensors desired in the cartridge.

In an embodiment, a cooling device **750** is affixed directly to the lower compartment **600** of the treatment head (See FIG. **19**). A cooling device **750** is positioned to remove heat from the lower compartment **600** and dissipate heat either into the upper compartment **510**, or to the exterior environment (outside the system). The cooling device **750** typically has a high capacity for heat transfer, and is also typically able to absorb and dissipate heat quickly. The cooling device **750** may be a stand alone device in the treatment head, or work in conjunction with a system in the base unit, such as a fluid circulations system **208**. The fluid circulation system **208** may form a circuit with the cooling device **750** to form a cooling circuit **700**, and have conduits for sending fluid to the treatment head **704**, **706** and conduits for receiving fluid from the treatment head **703**, **705**. In one aspect the cooling circuit **700** also includes a chiller for removing heat from the fluid as it circulates into the system base from the treatment head. The fluid circulation system **700** may also have a fluid degas unit **300** as previously described.

In accordance with an embodiment, instead of circulating water through a cartridge of a therapy head, the lower compartment **600** is a sealed structure that includes the transducer **900** mounted therein. A compartment fluid **604**, such as degassed water, surrounds the transducer assembly **900**, and is sealed in the lower compartment **600** with the transducer assembly **900**. The sealed lower compartment **600** is removable and replaceable, as a single unit with the coupling fluid **604** and the transducer **900**. Thus, a technician does not have to break a seal or remove a transducer **900** from the fluid **604**. Instead, a user may remove the cartridge **600** at any time, such as at the end of the useful life of the transducer assembly **900**, then a new lower compartment **600** with a new transducer **900** sealed inside fluid **604** replaces the previous lower compartment cartridge **600**.

In one aspect the fluid in a sealed cartridge may be degassed down to a level of 10 PPM dissolved oxygen or less. Dissolved oxygen may be used to measure the concentration of dissolved gasses because degassing operations tend to remove all dissolved gasses in equal proportion. The ratio of oxygen to other gasses is fairly constant, so reducing the oxygen content of a fluid also reduces the gas content of all other gases in the same ratio or proportion. The actual level of dissolved gas content that the fluid in the cartridge can tolerate before the acoustic path is adversely affected depends on the intensity of the ultrasound energy, the focal length of the transducer (either mechanically or electronically focused), the pulse repetition frequency (PRF) as well as other components of determining the transducers operation. Generally the combination of these electronic and power considerations can be balanced to allow a higher level of dissolved gases. If the transducer is operating at power and performance factors where dissolved gases are more likely to cause problems in the sealed environment (for example, by producing cavitation or micro streaming effects) then the dissolved gas level may be lowered to reduce or eliminate these negative effects. Generally a desired level of dissolved oxygen to achieve in a sealed transducer cartridge is less than 10 PPM. In many aspects, levels may be maintained at around 5 PPM.

The lower compartment **600** includes a profile that fits to a profile of the upper compartment **510** so that the two components may be removably attached to one another. If desired, a latch or other lock may be provided to releasably lock the two attached components. A tool may be used to assist in the removal of the cartridge **600** and the upper section **510** of the treatment head **500**, or to assemble the two components into a working treatment head **500**.

The transducer assembly **900** may generate heat during use, heating the fluid **604** (FIG. **20**). In accordance with an embodiment, a cooling device **750** is provided for cooling of the fluid **604** sealed in the lower compartment **600**. In an embodiment, the cooling device **750** includes a thermoelectric device **744**, but other devices may be used. As is known, a thermoelectric device, such as the thermoelectric device **744**, is designed so that electric voltage is converted to a temperature difference across the thermoelectric device. The temperature difference results in a cold side and hot side of the thermoelectric device **744**. In the diagram shown in FIG. **20**, the bottom side of the thermoelectric device **744** is a cold side, and the top side is a hot side. The thermoelectric device **744** is connected to a power source **204**, such as a battery, an AC/DC converter, or another suitable power source, for providing voltage to the thermoelectric device **744**. The power source **204** may be mounted within the therapy head or may be connected via wires from another location, such as the base unit **130**. As electric voltage is provided by the power source **204**, a temperature differential is created across the thermoelectric device **744**, creating the cold and hot sides.

In the embodiment shown in FIG. **20**, a heat transfer plate **748** is positioned between a cold side of the thermoelectric device **744** and the fluid **604**. The heat transfer plate **748** is utilized to remove heat from the fluid **604** and transfer the heat to the cold side of the thermoelectric device **744**.

A structure for removing heat from the thermoelectric device **744** may be attached to the hot side of the thermoelectric device **744**. In the embodiment shown in the drawings, this structure is a heat exchanger **752**. The heat exchanger **752** includes at least one fluid in conduit **706** and at least one fluid out conduit **705**. The heat exchanger **752** may be, for example, a manifold with a serpentine or parallel fluid path through, although other structures or methods for heat removal may be used.

In an embodiment, the thermoelectric chip layer **744** includes one or more thermal electric chip(s) (TEC). Multiple chips may be placed in an array to transfer heat from the lower compartment **600** (for example, TEC chips may include MELCORE CP1.0-63-05L 16.6 watt TECs (Melcore, 1040 Spruce St., Trenton, N.J. 08648)). As described below, these TECs may be permanently or releasably attached to the components that remove heat from the lower compartment **600**. A lower heat transfer plate **748** can be bonded to the lower compartment **600**, and absorbs heat from the lower compartment **600** either by thermal convection from the lower compartment **600**, as through a heat sink or heat transfer plate **748**, or by being in direct physical contact with the fluid solution **604** within the lower compartment **600**. In the latter case, the heat transfer plate **748** is fitted into the compartment wall of the lower compartment **600**. When the lower compartment **600** is attached to the upper compartment **510**, the lower heat transfer plate **748** is releasably connected to the TEC layer **744**. The TEC layer **744** has power from a power supply **204**. Proper use of the TEC allows a thermal gradient to be established in the TEC so the cool side of the TEC faces the lower heat transfer plate **748**. Heat absorbed from the lower compartment fluid **604** is transferred to the TEC through the coupling agent between the lower heat transfer plate **748** and the TEC layer **744**. The thermal coupling material between the TEC and lower compartment heat transfer plate is a material such as grease or gel that allows for good thermal contact between the two layers, but does not form any permanent bond, thus allowing for releasable engagement of the TEC from the lower compartment on demand.

The TEC layer **744** can be bonded in a more permanent fashion to the upper heat transfer layer **752**, by way of a thermally conductive epoxy or resin. The upper heat transfer layer **752** has a water basin for water circulation from the base unit. A fluid circulation system **208** pumps water through the fluid conduits **704**, **706**, with at least one line coming from the base unit **130** and going into the upper thermal transfer layer **752**, while the other conduit brings warm fluid back to the fluid circulation system **208**. As previously described, the fluid circulation system can include a chiller, so the warm fluid returning to the base unit is chilled prior to being pumped back to the thermal transfer layer **752**. The heat exchanger **752** may be a manifold that is arranged to permit a cooling fluid, such as water, to flow through. The fluid enters the inlet conduit **706** and exits via the outlet conduit **705**. The flow of fluid through the heat exchanger removes heat from the heat exchanger **752**, which in turn removes heat from the hot side of the thermoelectric device **744**.

As discussed above, the lower compartment **600** may be replaceable as a unit, with the fluid **604** of the lower compartment being in a closed system that is never opened by a user, even during replacement of the cartridge/lower compartment **600**. An example of the removable lower compartment **600** is shown in FIG. **21**. In this embodiment, a flange **646** extends upward from the lower compartment **600** and is removably attachable to a lower surface of the upper compartment. The portion of the lower compartment **600** used to engage the upper compartment is shown having a recess **662** where the lower compartment heat transfer plate **748** is fitted with a form fitting riser **772** to fit in the recess **662**. The form fitting riser **772** may form a flush or recessed fit in the recess **662** when assembled. When the lower compartment **600** is attached to the upper compartment, the TEC layer lines up with and is coupled to the heat transfer layer **748** via the form fitting riser **772**. In the embodiments shown in FIGS. **21-25**, the thermoelectric device is connected directly to the heat exchanger using a releasable heat transfer material, such as

heat transfer grease, pad or gels. Note the lower compartment heat transfer plate may be permanently bonded to the TEC layer using an epoxy if the lower compartment is adapted to fit to the lower heat transfer plate instead of the TEC layer when the lower compartment and upper compartment are engaged.

An exploded view of the major component stacks of an exemplary system are shown in FIG. **22**. Here the TEC layer **744** is integrated into the bottom section of the upper compartment. The heat transfer plate **748** may extend along a top surface of the fluid **604** to provide large area of contact between the heat transfer plate and the fluid **604**. The heat transfer plate **748** includes a central opening **770**. The opening **770** is designed to receive a controller mechanism for movement of the transducer assembly **900**, as described in application Ser. No. 12/364,327, cited above. A heat transfer plate riser **772** is included on one side of the heat transfer plate **748** and extends upward into the aperture **662**.

The thermoelectric device **744** is attached to the top of the riser **772**, for example, as described above, by a heat transfer material (shown by the reference numeral **780** in FIG. **23**) or other suitable adhesive or structure that is thermally conductive. The heat transfer material **780** between the thermoelectric device **744** and the top of the heat transfer plate riser **772** maintains a thermally conductive bond between the riser **772** and the thermoelectric device **744** but, in an embodiment, is releasable. As an example, the heat transfer material **780** may be held in place through capillary attraction when the lower compartment is connected to the upper compartment. Some adhesion may be provided to make a solid bond between the components, but the bond is preferably releasable. If a permanent bond is desired, the heat transfer material may be an epoxy. If a releasable option is desired, the heat transfer material can be a pad or grease.

Similarly, the heat exchanger **752** is attached to the hot side of the thermoelectric device **744** by a second heat transfer material **782** or other suitable heat conductive connecting structure. The bond here is also thermally conductive. The heat transfer material **782** in the upper section **510** can be an epoxy or other permanent bonding material.

The fluid circulation system **208** (FIG. **20**) is positioned, for example, in the base **130**. The fluid circulation system **208** pumps a fluid, such as temperature controlled water, in a circuit between the pump and the heat exchanger **752**. The fluid from the pump flows in the inlet **706** and out of the outlet **705**. In an embodiment, conduits **703**, **705** between the fluid circulation system **208** and the heat exchanger **752** are thermally conductive so that heat removed by the water from the heat exchanger **752** dissipates as the water travels on the round trip from the heat exchanger, through the pump, and back to the heat exchanger. As such, a chiller may not be needed to remove heat from the water. Instead, the thermal loss of the system results in the water being cooled before returning to the heat exchanger **752**. If the fluid is chilled, the outlet route **705** and pump input line **703** may be thermally conductive, while outflow pump line **704** and treatment head inlet **706** are thermally insulated. Note that while one pair of conduits is designated as the inlet pair and the other as the outlet pair, the conduits are generic in the sense that the flow direction can be reversed, so long as fluid flows in a circuit between the water circulation system in the base and the treatment head.

The use of a chiller or thermally conductive lines will depend largely on the amount of heat needed to be removed from the cartridge **600**. If the transducer assembly operates in a mode where virtually no heat is generated (for instance, in a low pulse repetition frequency diagnostic mode), then thermally conductive conduits would be amply sufficient to keep the temperature state of the cartridge at a desired constant level. However if the transducer were operated in a very high power therapeutic mode, the amount of heat build up in the cartridge **600**, and thus the cartridge internal degassed water **604** would be high enough to require the use of chilled fluid to help draw off the heat through the cooling device **750**. In one aspect the system is equipped with both thermally conductive fluid conduits where needed, and a chiller as part of the fluid circulation system **208**. That way the system may automatically regulate the use of the chiller based on thermal temperatures detected in the lower compartment **600**. Detection could be achieved through the use of heat sensors in the lower compartment **600**, bathed in the coupling fluid **604**, or able to sense the temperature of the heat transfer plate **748**. Optionally the chiller in the fluid circulation system may be manually controlled.

The temperature of the lower compartment/cartridge **600** may also be used to reduce a patient's skin sensation. Similar to the use of a cold pack to reduce pain, the cartridge may be regulated to achieve a low enough temperature to reduce skin sensitivity to therapeutic ultrasound treatments.

As described above, the lower compartment **600** is a sealed system that contains the transducer assembly **900**, the transducer fluid **604**, and the heat transfer plate **748**. This sealed system may be removed by removing the lower compartment **600** from the therapy head **500**. During removal, the temporary or releasable adhesive (e.g., the heat transfer material **780**), allows release of the heat transfer plate **748** from the thermoelectric device **744**. In this manner, the heat transfer plate **748** releases from the thermoelectric device **744** when the lower compartment **600** is removed from the upper compartment **510**, allowing the thermoelectric device **744** and the heat exchanger **752** to remain in the upper compartment **510** when the lower compartment **600** is removed and replaced. Alternatively, these pieces may remain attached to the lower compartment **600** and may be replaced as well, but, by leaving the thermoelectric device **744** and the heat exchanger **752** within the upper compartment **510**, no detachment or other reconfiguration of wiring for the thermoelectric device **744** or fluid input or output for the heat exchanger **752** is required. In addition, because these components remain in the upper compartment, the expense of replacing them is avoided.

During the treatment process, the transducer assembly **900** generates heat. If the transducer assembly **900** is overheated, damage to the transducer may occur. In the embodiment of the therapy head **500** shown in the drawings, the heat of the transducer assembly **900** is dissipated in the fluid **604**. This heat, in turn, is removed so that cooling may continue and/or so that the therapy head **500** does not become too hot to damage the transducer or to be placed against a patient. In accordance with an embodiment, the thermoelectric device **744** is used to remove heat from the fluid **604** so that overheating is not an issue.

During operation of the therapy head, the power supply **204** supplies voltage to the thermoelectric device **744**, which generates a heat differential between the thermoelectric device's hot side (upper side in FIG. **20**) and its cold side (the downward side). The thermal electric device can be selected based on the amount of cooling wattage desired to be removed from the system, and the capacity for the fluid cooling system to remove the corresponding cooling wattage from the thermal electric device representing the cooling wattage cooled from the lower compartment **600**, and the amount of electrical wattage put into the thermal electric device to achieve the desired cooling from the lower compartment. Because thermal electric device cooling is not 100% efficient, the fluid cooling heat exchanger connected to the thermal electric

cooling device in the upper compartment **510** of the therapy head **500**, typically is able to remove the combined thermal wattage of the cooling wattage from the lower compartment **600** and electrical wattage input into the thermal electric device to achieve the desired cooling wattage. For example, if in application the thermal electric device requires 10 electrical watts to achieve 6 cooling watts then the heat exchanger cooling system should be capable of removing 16 thermal watts through the hot side of the thermoelectric device to achieve the desired 6 watts of cooling. While this system is not as efficient as direct cooling of the lower compartment, it does allow the lower compartment to remain completely sealed, which provides additional benefits and ease of use.

In an embodiment using TEC devices, multiple TECs can be desirable to remove more heat rather than a single large TEC. Larger devices may have a diminishing return on efficiency, higher thermal transfer efficiency may be maintained by using smaller wattage drawing TECs. Thus the TEC layer may have numerous TEC devices arranged in a flat pattern. The heat transfer plate **748** could abut all the TEC devices arranged in the TEC layer. Likewise the heat transfer device **752** of the upper compartment would abut all the upper surfaces of the TEC layer simultaneously. The size, pattern and energy draw of the TEC layer **744** may vary substantially. Though a rectangular recess **662** is shown for receiving the TEC layer, the recess may be any size or shape to accommodate the TEC layer. The layer (and recess) orientation need not be horizontal, and a combination of multiple recess/aperture ports may be used to mate with multiple TEC layers distributed around the interface between the upper compartment **510** and the cartridge **600**. The physical limit of the upper compartment **510** that interfaces with the recess **662** can be the TEC layer **744**.

To remove heat from the hot side of the thermoelectric device **744**, the fluid circulation system **208** has a pump to pump a fluid, such as water, through the heat exchanger **752**. The water takes a serpentine path or parallel path through the heat exchanger **752** and removes heat as it flows through the heat exchanger. As such, the cold side of the thermoelectric device **744** constantly removes heat from the sealed degassed water **604** in the lower compartment **600**. In this manner, the lower compartment **600** may be maintained at a desired temperature. The heat in the heat exchanger water is removed through the thermal losses in the system, or may be removed in another manner, such as a downstream chiller. However, by using thermal losses in the conduits, passive cooling occurs, and additional heat removal devices are not required. As such, the passive cooling by the conduits to and from the circulation system **208** reduces expense and eliminates maintenance issues with respect to a chiller or other active cooling system.

When a user desires to replace the lower compartment **600**, the heat transfer plate **748** is removed with the lower compartment **600**, and the thermoelectric device **744** and everything above it remain attached to the upper compartment **510**. Another lower compartment **600** may then be attached to the upper compartment **510**, and then the therapy head **500** is ready for use again.

An illustration showing the fully assembled lower compartment heat transfer stack with heat transfer plate **748**, riser **772** and thermal conductive material **780** is shown on the bottom of FIG. **24**. The top of FIG. **24** shows the fully assembled upper compartment heat absorbing and liquid heat sink stack. FIG. **25** provides an illustration of the entire heat transfer stack using a TEC layer.

In an embodiment (FIG. **26**), a heat transfer plate **748** extends across the top and part of the way down the sides of a lower compartment **600**, forming an inverted bowl structure. In this embodiment, the heat transfer plate **748** is in contact with a lower-compartment fluid, such as degassed water (disposed within the lower compartment **600**), across the top and part way down the sides of the lower compartment **600**, thereby increasing the surface area through which heat can be transferred from the lower-compartment fluid into the heat transfer plate **748**. The inverted bowl shaped heat transfer plate **748** may be a component of a removable/replaceable lower compartment **600**. In the embodiment shown, the heat transfer plate **748** has a top surface **695** that is in contact with the lower-compartment fluid, and peripheral exterior plates **698** that are in contact with the lower-compartment fluid and form part of the exterior of the lower compartment **600**. Top surface **695** and exterior plates **698** can be thermally conductive so that they may transfer heat to the surrounding air, or they can be externally insulated to avoid presenting a hot external surface. In an embodiment, the heat transfer plate **748** includes a top surface and partial side plates (not shown) disposed within the lower-compartment fluid. With partial side plates disposed within the lower-compartment fluid, the lower-compartment fluid is contacted with both surfaces of the partial side plates, which results in increased contact surface area between the heat transfer plate **748** and the lower-compartment fluid. This increased contact surface area may help to increase the heat transfer rate between the heat transfer plate **748** and the lower-compartment fluid. Partial side plates disposed within the lower-compartment fluid can include fluid openings and/or channels to facilitate the flow of the lower-compartment fluid over these submerged partial side plates. The cold side of a thermoelectric device **744** can be attached to the top of the heat transfer plate **748** by a heat transfer material **780** and a heat exchanger **752** can be attached to the hot side of the thermoelectric device **744** by a heat transfer material **782**.

The lower-compartment fluid is "stirred" by acoustic pressure when the transducer (disposed within the lower compartment **600**) is active. This "stirring" may be sufficient to constantly circulate within the cartridge, and thereby make contact with the heat exchanging components. The cooled lower-compartment fluid tends to sink into the lower portion of the lower compartment **600**. The combination of the rising fluid heated by the transducer and the sinking fluid cooled by the heat transfer plate may result in a convective current that helps to enhance the rate of heat transfer between the transducer and the lower-compartment fluid and between the lower-compartment fluid and the heat transfer plate **748**. This convection current may be further enhanced by the cooling of the lower-compartment fluid that occurs due to contact with the partial sidewalls of the heat transfer plate **748** on account of resulting peripheral sinking of the cooled lower-compartment fluid, which may complement the central rising of the lower-compartment fluid that is heated by a centrally located transducer. Additionally, the increased contact area between the heat transfer plate **748** and the lower-compartment fluid may also help to maintain the lower-compartment fluid at a lower equilibrium temperature.

In an embodiment, the heat exchange process is done by circulating fluid from the fluid circulation system **208** into the cartridge **600** without compromising the integrity of the fluid sealed in the cartridge (FIG. **27**A). A heat exchanger **750** can be positioned within the lower compartment **600** so as to absorb heat from a lower-compartment fluid **604**. The first heat exchanger **750** is physically connected to a fluid circuit **706**, **705** so temperature controlled fluid from the fluid control circuit **208** can take heat from the lower compartment fluid **604**.

The first heat exchanger **750** is a fluid-circulating heat exchanger that is in fluid communication with the fluid circulation circuit **208** which contains a fluid chiller (not shown). In an embodiment, the first heat exchanger **750** are removed with, the lower compartment **600**. A pump (not shown) can be used to circulate a fluid (e.g., water) between the first heat exchanger **750** and the chiller in the fluid circulation system **208**.

Various configurations can be used for the first heat exchanger **750**. The first heat exchanger **750** can be made from a thermally conductive metal (e.g., brass, copper, aluminum, etc.). The first heat exchanger **750** can also be shaped to maximize its surface area for more effective heat transfer. Such shapes are well known in the art for cooling, and include common shapes like baffles, coils or other repeating patterns.

The use of a first heat exchanger **750** can provide a number of advantages. For example, as described above, the first heat exchanger **750** can be located so as to facilitate circulation of the lower-compartment fluid, thereby helping to increase heat transfer. Additionally, the first heat exchanger **750** can be configured to increase and/or maximize the amount of surface area contact with the lower-compartment fluid, thereby helping to increase heat transfer.

The chiller can be located at a variety of locations within the base unit. In one aspect the chiller is located along with the rest of the fluid circulation system **208**. If the chiller is not positioned in physical proximity to the fluid circulation system, it is still considered part of the system **208**. Alternatively, the heat exchanger **750** may be positioned within the upper compartment **510** in a manner that allows for cooling in a circuit involving components only inside the therapy head **500**. Such an embodiment may include a air cooled heat sink and fans to ensure air flow moves over the heat sink in a continuous manner.

FIG. **28** shows a lower compartment **600** for a therapy head **500** (FIG. **14**) in accordance with an alternative embodiment. The front or lower lens includes a window **602** (best shown in FIG. **29**A) and sides **614**.

FIG. **30** shows another embodiment where the fluid from the lower compartment is circulated into the upper compartment to a heat dissipating unit **750** which may include a heat sink with a plurality of heat radiating elements (similar to heat sinks used for computer central processor unit (CPU) chips). The heat sink may have a fan for directing air over the heat sink, or be encased in a fluid bath and cooled using fluid from the fluid circulation system **208**. In one aspect the fluid used for cooling purposes is water.

The lower compartment **600** includes a transducer assembly **900** mounted therein and having a ball joint **608**. The ball joint **608** is part of a pivot mechanism **610**, such as is described in U.S. patent application Ser. No. 12/364,327, cited above. An opening **612** is located at the end of a shaft **613** for the transducer assembly **900**.

The lower compartment **600** includes a heat exchanger **614** that extends along the inside of the side walls **603** for the lower compartment **600**. The heat exchanger **614** is preferably formed of a highly thermally conductive material, such as copper. In the embodiment shown in the drawings, the heat exchanger **614** includes two sets of tubes that extend in a serpentine path around a perimeter of the lower compartment **600**, inside the side walls **603**. In an embodiment, the heat exchanger **614** is arranged so that it maximizes space on the outer portions of the lower compartment **600**, but is outside the range of movement of the transducer assembly **600**. In one aspect, the cooling system **700** is able to remove as many cooling watts from the cartridge **600** as necessary to maintain a desired operational temperature. If the transducer assembly is operating at high power and the transducer fluid **604** gets hot, the cooling watts to remove may be as high as 60 cooling watts. The desired temperature in the cartridge and the arrangement and type of TEC devices are balanced to ensure the cooling range is obtained. Although some instances may require high cooling watts, the system can operate by removing 15-20 cooling watts. In this case both chilled water and an appropriate flow rate may be used to maintain the cartridge temperature between 1-37° C. The temperature in the cartridge may be adjusted by the user. If desired, a TEC configuration can be used in combination with a fluid baffle configuration (not shown).

The heat exchanger **614** includes an inlet conduit **616** and an outlet conduit **618**. The inlet and outlet conduits **616**, **618** are mounted to ball seals **620**, **622** and include valve fittings **624**, **626**. The seals **620**, **622** are mounted in a top-plate **630** of the lower compartment **600**. The top-plate **630** includes a central opening **632** through which the shaft **613** extends. An O-ring **634** is mounted in the opening and seats against the ball joint **608**. The shaft **613** and the ball joint form a bearing member that fits in the central opening **632**. The O-ring **634** permits the transducer assembly **900** to pivot as described in U.S. patent application Ser. No. 12/364,327, and prevents leaking of fluid out of the lower compartment **600** at the opening **632**. A pivot top **636** fits over the O-ring **634**. The ball joint **608** is captured between the pivot top **636** and the inner rim of the opening **632**.

An electrical connector **638** is positioned on one side of the top plate **630**. Wires may run from the electrical connector **638** to the transducer assembly **900**. In addition, the electrical connector **638** may be configured to receive a wiring harness or other electrical connections that lead from the upper compartment. In an alternate embodiment, the wires for the transducer assembly **900** may extend along or down the shaft **613**, or may be routed in another manner. The electrical connector **638** is preferably a quick disconnect connector and connects to a wiring harness or other connector (not shown) that is attached to the therapy head. When the wiring harness is attached to the connector **638**, power, such as for the HIFU transducer drive or for other electronics in the transducer assembly, or communication signals may be supplied to the transducer assembly **900** via the wiring circuit.

Optionally, an alignment post **640** is positioned on one location of the top plate **630**. The alignment post **640** permits an installer to properly align the lower compartment **600** with an upper compartment of the therapy head during installation. A bubble trap **642** may be provided for the capture of bubbles formed inside the lower compartment **600**. In an embodiment, a micro valve **644** is attached to the bubble trap **642** to isolate bubbles away from the acoustic path of the transducer. The micro valve may be mounted in the alignment post **640**.

The lower compartment **600** can be sealed, with the acoustic window **602**, the sides **603**, and the top-plate **630** forming an enclosure. A coupling fluid, such as water is captured in the enclosure, and the enclosure is permanently sealed. To prevent gas seepage, the portions forming the enclosure can be treated with a material to prevent gas leakage into the lower compartment. The enclosure interior may be treated with a sealant, or metallization layer, such as sputtered titanium. The heat exchanger **614** extends around the perimeter of this enclosure and provides optimal heat convection because of its serpentine or parallel path configuration, the large amount of surface area provided by extending the heat exchanger **614** around the perimeter, and by utilizing the dual conduit arrangement.

As with earlier embodiments, water is circulated through the heat exchanger **614** via the inlet conduit **616** and the outlet

conduit **618**. This water may be circulated, for example, to a base unit for cooling, or may be attached to a thermoelectric cooler for cooling, or may be routed through a conduit with inefficient heat retention that results in heat loss, as described in earlier embodiments.

FIG. **29**B is an bottom, isometric view of a top portion of a transducer cartridge displaying an alternative fluid conduit **614**A in accordance with an embodiment. Instead of the serpentine shape that is used for the conduit **614**, the conduit wraps around an inside portion of the top plate **630**. Otherwise, the cartridge is the same in configuration. Many other shapes can be used for the conduit.

The therapy head **500** includes a body, such as an upper compartment **510**, including an indentation **502** for fitting a user's hand (FIG. **37**). The upper compartment **510** may be attached to an arm and/or may include wires or conduits that lead to a base unit.

FIG. **27**B is a bottom perspective view of an exemplary upper compartment **510**, with the lower compartment **600** removed. The upper compartment **510** includes a recess **554** for receiving the lower compartment **600**. An electrical connector **538** is positioned in the recess **554**.

An opening **558** is located in the recess **554**. Two fluid connectors **560**, **562** are positioned on opposite corners of the recess **554**. These fluid connectors **560**, **562** lead, for example, to a thermoelectric cooler, a chiller in the base unit, conduits that provide a cooling effect by being thermally inefficient, or some other cooling structure or configuration.

A control arm **578** for a driving mechanism, such as is described in U.S. patent application Ser. No. 12/364,327, is centrally positioned in the recess **554**. The angle of the control arm **578** may be determined by the position of the driving mechanism.

To attach the lower compartment **600** to an upper compartment **510** of a therapy head, the wiring harness or recess **554** that is connected to the upper compartment is connected to the electrical connector **538**. If a wiring harness is used, it is connected first. If a stationary connector, such as the recess **554**, is used, then the connector is connected to the electrical connector **538** as the lower compartment **600** is attached to the upper compartment **510**.

In any event, to attach the lower compartment **600** to the upper compartment **510**, the top plate **630** of the lower compartment **600** is fitted into the recess **554** of the upper compartment. To allow this fitting, two fluid ports **620**, **622** are aligned to the corresponding fluid ports **560**, **562** in the upper compartment **510**. An optional guide post **640** is aligned with the corresponding female structure in the upper compartment, for example the opening **558**. The fluid ports **620**, **622** may use seals to align with and connect to the fluid connectors **560**, **562** on the upper compartment **510**. During alignment, the opening **612** on the shaft **613** is aligned with the control arm **578** on the bottom of the upper compartment **510**. The control arm **578** may have to be centered for proper alignment. To this end, a "home" operation may be provided for centering the control arm **578**. This control arm **578** is connected to the actuator assembly in the upper compartment, and the transducer assembly **900** in the lower compartment (when the upper and lower compartments are properly combined) such that, once installed, the movement of the control arm causes the desired movement of the transducer assembly **900**.

After alignment, lower compartment **600** is pressed into the upper compartment **510**. The two profiles of the lower compartment top plate **630** and the upper compartment recess **554** fit together. The electrical connector **538** seats onto the corresponding lower compartment electrical connector **638**. The mechanical linkage **578** engages the transducer arm assembly **612**. If fluid connectors are used, the fluid lines **560**, **562** connect to the seals **620**, **622**. Appropriate valves are provided to open or close the fluid connectors. The nub **578** fits into the opening **612** of the shaft **613**. The therapy head **500** is now ready for operation.

Once connected, cooling water may flow into and out of the heat exchanger **614** via the fluid connectors **560**, **562**. The direction of the transducer assembly **900** may be changed by using the drive mechanism, via the attachment of the nub **578** and the opening **612**. The transducer assembly **900** may be provided power via the connectors **538**, **638**.

Disconnecting the lower compartment **600** is done in reverse order. That is, the lower compartment **600** is disconnected from the upper compartment. If desired, a latch or other lock mechanism may be provided for maintaining connection of the lower compartment **600** to the upper compartment **510**. As an alternative, the connection of the various components of the lower compartment **600** to the appropriate components of the upper compartment, such as the seals **620**, **622** to the fluid connectors **560**, **562**, may provide a sufficient holding force to keep the lower compartment **600** in place. Connecting and disconnecting the lower compartment from the upper compartment may be facilitated by the use of a tool.

In accordance with an embodiment, a mechanical compensator may be provided for the lower compartment **600** as shown in FIGS. **32**A-B, **33**A-B. This mechanical compensator can be configured to offset pressure changes in the environment in which the therapy head is operated, for example, changes in pressure due to altitude, and to accommodate pressure changes in shipping the cartridge and/or accommodate any water loss over time.

The mechanical compensator may take a variety of forms. Any device that adjusts for changes in pressure and maintains the desired degas state of the internal fluid may be used. In an embodiment, a passive compensator has a body **680** containing closed piston face **686** and a spring **684** (FIG. **32**A). The closed piston face **686** has an opening **688** exposed to the fluid filled interior of the lower compartment/transducer cartridge **600**. The cartridge ships with the full water volume and as the internal water volume expands (due to internal temperature increase or external pressure decrease) the piston face **686** deflects backwards against the spring **684** allowing the internal volume to expand (FIG. **32**B). Once the temperature or pressure returns to normal, the spring force pushes the piston forward returning the volume back to initial equilibrium. The back of the piston is vented to the atmosphere. Other examples of passive compensators include metal bellows, an air filled bladder (having the air sealed from the fluid), a compressible material like foam or soft durometer rubber component, or an expandable outer housing.

In an embodiment, and active compensator **690** may be used. An active compensator could tap off of the cooling water in the heat exchanger to operate the compensator. The compensator would consist of a housing **692**, a piston **694** and a one way valve **696**. The cartridge ships under-filled by the volume of the compensator with the internal piston in the retracted position (FIG. **33**A). Once the cartridge is installed and the system turned on, the pressure of the cooling water would drive the piston outward to force the volume increase. The piston could be sized to reduce the pressure so that the piston extension would stop when the pressures equalized (Example: Cooling water at 20 PSI and internal pressure desired to be 2 PSI then the piston area could be reduced 10:1) (FIG. **33**B). The one way valve would allow the piston to expand but not contract thereby maintaining the pressure in the cartridge. Other embodiments of an active compensator

include a flexible bladder, a mechanical piston or a user applied syringe. Additional embodiments are readily available and well understood by those skilled in the art.

In an embodiment, the inner surfaces of the cartridge **604** (FIG. **31**) may include a thin inner coating **601** to prevent gas permeability. For example, if the sides **604**, window **602** and top plate **630** are made of plastic, a titanium base layer may be provided to prevent atmospheric gas from entering the chamber and dissolving in the fluid inside. This layer may be attached in a suitable manner, but in an embodiment is titanium that is sputtered between approximately 500 to 1500 angstroms thick onto the inside surfaces of the cartridge. Alternatively the metallization layer may be copper and nickel, or any other material suitable to fill pores in the plastic chamber and prevent gas from entering the chamber. Any material may be used for this purpose that satisfies the requirements of being insolvent in the liquid (the material will not enter into solution in any appreciable amount) and the material reduces gas permeability through the chamber material to an acceptable level. In one aspect, the dissolved oxygen (DO) content is kept below about 10 ppm. In another aspect the DO content is below about 8 ppm.

In an embodiment, the coating reduces the gas permeability of the plastics to prevent the internal fluid volume from absorbing gasses. This is done to maintain the Dissolved Oxygen level in the sealed water volume below a certain level. Metallization sputtered coatings ranging between 500 and 1500 angstroms work well for this purpose. Desirably the insides of the plastic housings are coated with 80 microinches of copper followed by 10 microinches of nickel. The testing shows that the plating absolutely reduces the gas permeability of the plastics. The thickness is not as critical assuming that the atomic radii of the coating metal are smaller than the pores in the plastic. It is believed that the atoms of metal cover and fill the pores.

A temperature sensor may be provided to sense the temperature of the water in the lower compartment **600**. If desired, operation may alter according to a sensed temperature, such as by shutting down operation, slowing operation, or increasing cooling.

In an embodiment, the cartridge may be cooled directly by the fluidics of the main system (FIG. **31**). The baffles are removed and the fluid from the fluidics system flows directly into the cartridge through an inlet port bal seal **620** and out through the outlet port seal **622**. Fluid from the fluid circulation system floods the cartridge after it is connected to the upper compartment **510** and bathes the transducer assembly **900** in fluid. Fluid flow velocity is adjusted to provide the desired cooling time to bring the cartridge to the desired internal temperature. It may also be used to provide additional cooling to reduce skin sensitivity of a patient being treated (like placing a cold pack on the skin). In this embodiment the fluid circulation system includes a degas unit to remove gas displaced by fluid when the cartridge is initially flooded with fluid. In an embodiment the fluid is water which is filtered and degassed. A pressure adjustment device or pressure control system may be used to keep the cartridge under pressure if the window is flexible, or some other component of the cartridge may change that may effect the internal pressure.

Therapy heads described herein provide a number of benefits. First, a lower compartment can be a self-contained unit, without water connectors or water conduits. Such a lower compartment, or transducer cartridge, does not need to be drained when the lower compartment is replaced. Thus, unlike prior art systems, water is not circulated from the base unit to the lower compartment, and a particular pressure of water into a lower compartment does not have to be maintained.

Additionally, in some embodiments, the lower compartment and the transducer are integrated into an easily replaceable unit that does not require the removal of wires or water or other fluid conduits. By simply attaching a lower compartment to an upper compartment, a heat transfer plate or heat exchanger is attached to a thermoelectric device and the lower compartment is prepared for use.

The transducer assembly **900** used in the lower compartment or cartridge **600** is now described. In an embodiment the transducer assembly has a cylindrical shell having a transducer mounted in one end of the cylindrical shell, and a mechanical arm and electrical connector mounted in the opposite end of the cylindrical shell. The shell contains a PCB dedicated to run the transducer, and handle any data feedback flow from the transducer to any other part of the system **100**. The transducer may be a single element mechanically focused ultrasound transducer as previously described in copending U.S. patent application Ser. No. 12/051,073 entitled Interchangeable High Intensity Focused Ultrasound Transducer" which is commonly assigned. Alternatively the transducer may be an annular array, linear array or phased array transducer with the capability of delivering therapeutic ultrasound.

In another aspect the interface cable **116** has a coaxial cable for powering, controlling and receiving signals from the individual elements of an array transducer. Fewer channels in the cable **116** may be used if a transducer array has more than one element tied to a single control line, allowing all tied elements to be excited simultaneously from the same command signal.

A transducer assembly for use in the systems described herein may allow for some variation. A tall stack and a short stack transducer assembly are provided for. The tall stack transducer possesses the features for interchanging the transducer in the therapy head. The short stack transducer is provided for embodiments that may utilize a transducer cartridge. It is possible to use the tall stack transducer in a transducer cartridge, however the cartridge becomes elongated, and the mass of the transducer on the end of the pivot arm may be problematic as the transducer is moved in a three dimensioned pivot arc. First described are the tall stack transducer assemblies. In an embodiment, a transducer for use with the therapy head is now described (FIG. **36**A). The transducer can be similar to one previously described in copending U.S. patent application Ser. No. 12/051,073 entitled Interchangeable High Intensity Focused Ultrasound Transducer. In an embodiment, there is a housing **3616** having a substantially cylindrical shape. The housing **3616** has a neck down region located near an isolation layer **3634**, and a larger diameter near a mechanically focused transducer **3622**. The transducer side **3620** is open, or has a window so ultrasound energy may be broadcast out of the housing **3616** unimpeded. The transducer **3622** is secured near the open end **3620**, and connects to an interface **3628** via a set of connection pins **3624**. The connection pins **3624** are held in place with a concentric liner **3626** inside the housing **3616**. The interface **3628** may be a set of connecting wires as previously described, or may include a circuit, PCB, PC(B)A or other hardware component. The interface may also have additional electronics, such as a transformer **3642** for tuning the transducer **3622**, a data chip or integrated circuit (IC) **3630** to help identify the interchangeable transducer **3610** to the medical system. Additional components are described below.

Behind the transducer **3622**, there is a seal **3614** for preventing water or atmosphere from entering the internal com-

partment of the transducer assembly **3610**. Working in conjunction with the seal **3614** is an isolation layer **3634** for reducing pin corrosion and/or cross talk between the external electrical connectors **3640**. Note the transducer side **3620** is also sealed against the outside environment. While the transducer side **3620** may be sealed with the transducer **3622** itself and various compounds which can be used to prevent leakage, the seal **3614** has one or more apertures **3650** for the protrusion of the external electrical connectors **3640**. The apertures **3650** are typically large enough to allow the passage of the electrical connectors **3640**. The apertures may rely on an interference fit to prevent seepage of fluid between the apertures and the pins, or the use of a sealing agent, or both. The apertures **3650** may be sealed once the external electrical connectors **3640** are placed using solder, epoxy, resin, adhesive or other suitable sealing agents. A mechanical connector **3632** is located on the housing and designed for engagement of a corresponding connection on the medical system socket **3638**. The mechanical receiving element **3636** and mechanical connector **3632** form a transducer-system connection. This connection is typically one having high endurance. Repetitive reliability is desirable, but not required for the transducer connector **3632**, as it is not envisioned that any one particular transducer will be removed and inserted a large number of times.

The design of the transducer connector **3632** and the system side connection (receptor) **3636** allow for individual transducers to be interchanged with the medical system on demand. This allows a single medical system to have a great deal of variety in its operational scope. Each new transducer can provide added capability as well as replacement for worn or out dated parts. In one aspect the mating of the transducer **3610** to the system can be accomplished with a low insertion force connector **3632** and receptor **3636** combination. Though the insertion force is low, the connection is robust so the transducer **3610** will be stable while mounted in socket **3638**. Electrical communication between the system and the transducer is maintained regardless of how the socket might be moved. The socket is attached to the linkage allowing for the transducer to move as needed by the motor assembly.

In another embodiment, a transducer assembly having a shortened height may be used in a transducer cartridge (a short stack transducer assembly). In an aspect of the embodiment, the transducer eliminates the cylindrical housing. Instead, the transducer may be placed into a short housing dimensioned just about the size of the transducer itself (FIG. **36**B). The transducer **6402** has a matching layer **6404** and the transducer is set inside a lower housing **6406**. The lower housing **6406** has an inner ring shaped cut out dimensioned to match the circumference of the transducer **6402**. The transducer may be secured into the lower housing an adhesive compound, or may be welded into place. Alternatively, the transducer may be press fit into the lower housing by a donut shaped support **6414** for supporting electrical contacts. A flex circuit **6408** is laid on top of the support **6414** and upper casing **6410** is used to seal the assembly together. The upper casing **6410** has a raised roof line to make room for a recess **6412** used to receive a guide arm from the ball joint. The arm may be fitted into the recess using an interference fit, glue or other adhesive to secure the bonding between the arm component and the upper casing. A locking piece **6420** is used to help secure the upper casing **6410**, the flex circuit **6408** and the lower housing **6406** together.

In an embodiment, the flex circuit **6508** connects to the transducer **6502** using a set of spring loaded electrical pins $\mathbf{6501}_{a\text{-}n}$ (FIG. **36**C). The spring loaded electrical pins (pogo pins) are seated in the donut shaped support **6514**, and spring tension of the pins provides pressure on the transducer **6502** to keep the transducer properly seated against the lower section **6506**. The housing also has an upper housing **6510** with a recess **6512** for engaging a moving post. The electrical pins **6501***a-n* connect to electrical lands or contacts on the transducer. A matching layer **6504** is provided on the transducer as well.

An assembly illustration of the short transducer stack is shown in FIG. **36**D. The lower section **6606** has a lip on the inner circumference so the matching layer **6604**, bonded to the transducer **6602**, can sit on the lip. A donut shaped support **6614** sits on top of the transducer **6602** and matching layer **6604** assembly and provides physical support for a set of electrical contact pins $\mathbf{6601}_{a\text{-}n}$, which may be spring loaded pins. The electrical contact pins are in electrical communication with the flex circuit **6608** and the transducer **6602**. An upper housing **6610** sits on top of the flex circuit, donut shaped support and lower housing **6606**. The upper section **6610** may be bonded to the lower section. A seal or locking piece **6620** may be used to secure the flex circuit **6608** into the assembly. The flex circuit has an electrical connector **6630** that provides electrical connection and communication between the short transducer stack and the therapy head. The electrical connector **6630** may be shaped to fit within the electrical port **638** (FIGS. **29-31**A). The circular aperture **6640** of the flex circuit may be positioned to fit over the ball joint **610** and wrap around to connect to the transducer. The short stack transducer may be used in place of the transducer assembly **900**.

In another embodiment, a hybrid stack transducer may be used. The hybrid stack transducer combines the space saving features of the short stack transducer assembly and the socket style interchange between the system (treatment head) and transducer assembly used in the tall stack transducer assembly. This hybrid stack allows a therapy head to use a smaller volume of coupling fluid since the size of the transducer chamber defined by a removable cap, and the lower end of the treatment head, is reduced.

Transducers used in the various transducer assemblies described herein are typically high intensity focused ultrasound transducers. Focusing may be achieved by using mechanically focused (curved) transducers, or electronically steered/focused transducers such as annular arrays, linear arrays and 2D arrays.

The transducer housing may have a metallization layer on the inside of the cylindrical housing to prevent gas from seeping from the inside of the transducer assembly into the degassed fluid used in the cartridge. Furthermore the transducer housing has a reduced axial length to allow for greater mobility within the cartridge. Shortening of the stack of components over the prior art is accomplished by reducing the housing, tightening the space between the components, and may include reducing the axial height of components such as the tuning transformer or the electrical connectors. The housing is dimensioned to allow the transducer to move and pivot within the cartridge as desired without getting tangled up in the cooling system or the side walls. Alternatively an array transducer may be used in the transducer assembly.

Optionally the treatment head **500** as described herein in various embodiments, may also include a fluid spraying system for distributing a coupling fluid from within the system, onto the body of a patient, prior to treatment by the treatment head. A system possessing the spraying device is now shown in FIGS. **37-44**. In one aspect the fluid used in the fluid circulation system **208** is also used as the coupling fluid on the patient body. The medical ultrasound system **100** has a fluidics system **208** including at least one pump and filter set **220**,

where fluid is pumped into the treatment head **500**. The fluid may be used for any of the functions and purposes described herein in addition to being used as a coupling solution for a sprayer. A sprayer **588** (FIG. **37**) is positioned within the upper compartment **510** of the treatment head **500** and is linked to a manual trigger **514**. A user may aim the sprayer **588** at a desired portion of the patient and spray coupling fluid on to the patient by depressing the trigger **514**. Since the fluid in the fluidics system is under pressure, the fluid can spray out and cover the desired area at which the user aims at.

In one embodiment the fluid consists essentially of water. The water in the fluidics system is desirably about 99.0% or better pure, and typically free of large particulate matter. The filter(s) in the pump and filter set **220** should remove particulate mass and any impurities in the water down to a predetermined diameter, such as about 0.2 um (microns). Smaller or larger mesh size filters may be used depending on the type of particulate matter in the water, e.g., a biocide may be used to prevent bacterial growth enabling a more porous filter, while lack of any biocide would call for a small pore filter to capture bacteria. The fluid typically does not contain surfactants. The general use of water as a coupling solutions, as described in co-pending U.S. patent application Ser. No. 11/373,419 entitled Method and Apparatus for Coupling a HIFU Transducer to a Skin Surface shows no surfactant is generally needed. In one aspect, the water is degassed, filtered, gel-free, and substantially pure.

The exterior of the ultrasound head **500** can be an ergonomic form factor that is easily handled by an operator. An example of one embodiment is shown in FIG. **37**, but the treatment head may take many other forms. The treatment head **500** may have cables extending from it and going to the base unit **130**.

In use, the ultrasound head **500** is manually placed into contact with a patient's skin. Ultrasound treatments are administered through the ultrasound head **500**.

As shown in FIG. **37**, an ultrasound head **500** can include a lower compartment **600**, or cartridge, and an upper compartment **510**. The upper compartment **510** is desirably dry and houses wires, cables, a motor assembly, and/or other features for a transducer, which is mounted in the lower compartment **600**. The lower compartment **600** preferably contains a fluid, such as degassed water, used to couple ultrasound energy from the transducer to and through a flexible window **602** located near the bottom of the lower compartment.

In operation, a technician can roll the medical ultrasound system **100** adjacent to a patient. The technician can grasp and move the treatment head **500**, wielding it freely except for the cable **116** connecting the treatment head **500** to the base **130**. The ultrasound head **500** is aligned so that the window **602** is in contact with the patient. The display/UI **102** may be operated to generate an appropriate treatment or diagnostic test. During use, the transducer mounted in the lower compartment **600** generates ultrasound energy, which may be used, for example, for the destruction of adipose tissue, as described in U.S. Published Application No. 2006/0122509.

The transducer assembly **900** mounted in the lower compartment **600** may take various different forms, and, in an embodiment, is movable so that it may focus toward various different locations of the window **602** as previously described.

As described in the background section of this document, as well as in the above incorporated U.S. patent application Ser. No. 11/373,419 entitled "Methods and Apparatus For Coupling a HIFU Transducer To a Skin Surface," a coupling agent or fluid (e.g., water) can be used between the ultrasound head and the skin to reduce or prevent the attenuation or reflection of ultrasound energy emitted by the ultrasound head's transducer. To this end, to enhance transmissibility between the cartridge **600** and a user's body, a coupling fluid can be applied to the skin surface to moisten the skin in a substantially even manner. The transmission window **602** can then be placed on the skin and pressed into the skin surface slightly to provide contact across the face of the flexible window with the skin surface.

FIG. **38** is a block diagram of (part of) a medical ultrasound system with integrated controlled dispersion of coupling fluid, in accordance with an embodiment. Medical ultrasound system **100** includes an ultrasound head **500**. Coupled with the ultrasound head **500** are one or more coupling fluid dispersion devices **582**, such as spray nozzles, through which coupling fluid is dispersed. A flow control subsystem **584** is used to control the transfer of coupling fluid from a coupling fluid source **586** to the one or more coupling fluid dispersion devices **582**.

In an embodiment, the system **100** is configured so that a doctor, technician or other user can control the dispersion of the cooling fluid while holding the ultrasound head in his or her hands by using a trigger **514** (FIG. **39**) positioned on the upper compartment **510**, and within easy reach while holding the treatment head **500**. By dispersing the cooling fluid distributed by the fluidics system of the base unit, the operator can produce a viable coupling fluid without taking their hands off the therapy head, or being distracted while reaching for an accessory device for dispersing a separate coupling fluid. Thus, in an embodiment, the cooling fluid used inside the system, may also be a coupling fluid used outside the system. The dispersed fluid is referred to as coupling fluid when it is outside (dispersed) the system.

The coupling fluid may be applied by the coupling fluid dispersion devices **582** by spraying the coupling fluid onto the skin. For example, the one or more coupling fluid dispersion devices **582** can include one or more spray nozzles configured to disperse a volume of water on a patient's skin as discussed above. The one or more spray nozzles can be positioned and oriented relative to the ultrasound head so that they can spray around the transducer cartridge to disperse coupling fluid on the patient's skin that is located under the flexible window when the ultrasound head is spaced slightly from the patient. Although a single spray nozzle can be used, in an embodiment, multiple spray nozzles are used so that each of the spray nozzles need only be positioned and oriented so as to cover a portion of the patient's skin located under the flexible window.

The one or more fluid dispersion devices **582** can also be configured to introduce coupling fluid into the space between the flexible window **602** and the skin surface so that the coupling fluid may spread out evenly by capillary action. In such an arrangement, the nozzles are used to disperse a volume of coupling fluid on the patient's skin so the skin surface is at least lightly wetted. As the coupling fluid is sprayed on the skin surface, droplets form are deposited on the skin. In one aspect the droplets remain small and separate from one another so the droplets do not pool together and roll off the skin surface. When the cartridge **600** is placed on the moistened skin surface, the droplets are compressed. The droplets collapse and run together to form a thin film of coupling fluid. The thin film of coupling fluid may be held in place between the transducer and the skin by capillary attraction.

In addition to or instead of one or more spray nozzles oriented as discussed above, the fluid dispersion device **582** may use various other fluid introduction approaches. For example, one or more fluid lines may be positioned and oriented so that discharged coupling fluid is introduced into the

space between the flexible window and the skin surface. As a further example, coupling fluid may be supplied to a peripheral manifold having multiple discharge ports distributed around the periphery of the flexible window. One or more peripheral sealing members can also be used to help retain coupling fluid between the flexible window and the patient's skin.

In another embodiment, if the ultrasound head **500** is held in close proximity to a skin surface, the coupling fluid may be introduced into the space between the flexible window **602** and the skin surface, and the coupling fluid may spread out evenly by capillary action. For example, a spray nozzle can be oriented so as to spray water towards a peripheral gap between the flexible window **602** and the skin surface. Even distribution may be promoted by gently rocking the ultrasound head over the skin surface to help push out large air pockets.

The flow control subsystem **584** can include a variety of components. For example, the flow control subsystem **584** can include a hand pump or hand actuated switch **514** coupled with the ultrasound head or can include a foot pump or foot actuated switch positioned for use while the surgeon of technician is holding the ultrasound head. The flow control subsystem can be manually actuated, such as by a hand or foot operated pump. The flow control subsystem **584** can include a combination of one or more electrical pumps, control valves, and/or control switches.

Various coupling fluid sources **586** can also be used. For example, a combined coupling/cooling fluid reservoir can be used to hold a quantity of coupling/cooling fluid for subsequent dispersion onto a patient's skin. A coupling fluid source can also be a fluid supply line, such as a water supply line where water is used as the coupling fluid. As will be discussed below in more detail, a coupling fluid source can include a fluid system, such as a fluid system configured to use water to cool the ultrasound head.

FIG. **39** illustrates a medical ultrasound system **100** that includes a coupling fluid reservoir **208***a* as the coupling fluid source. Ultrasound system **100** includes a base unit **130** and an ultrasound head **500** having a unigrip handle **202**. A coupling fluid reservoir **208***a* can be located within base unit **130** and coupled with one or more coupling fluid dispersion devices via one or more coupling fluid lines **116***f* (FIG. **41**). A flow control subsystem that includes one or more flow control devices, such as a solenoid valve and/or a fluid pump, can be used to control fluid communication between the reservoir and the one or more fluid dispersion devices. For example, where the coupling fluid in the reservoir **208***a* is pressurized (e.g., at 10 to 20 psig), a valve (e.g., a solenoid valve) can be used to regulate the dispersion of control fluid. A cable **116** from the base unit is shown with the fluid lines **116***f* from the interface cable descending into a fluid controller **707**. From the fluid controller **707** one fluid line **709** goes to the sprayer **582**. Multiple lines may be used to feed multiple sprayers. Other fluid lines exiting the fluid controller are the fluid input line for a fluid path **704** to the cooling device **750**. A return line **705** is also shown where warm water returns from the cartridge to the fluid circulation circuit **700**. FIG. **41** also one possible route of the power and coax lines **116***t* by going through the motor assembly and entering the cartridge through the center of the control arm **578**. Alternatively the power and control lines for the transducer assembly may go through a separate electrical connector.

A control switch, such as a momentary switch (i.e., normally open switch where the contacts engage only while held in the closed position), can be used to activate the solenoid valve. A control switch can also be used to activate a pump that transfers coupling fluid from the reservoir to the one or more fluid dispersion devices (e.g., spray nozzles). A combination of a pump and a solenoid valve can also be used. Manually actuated pumps, such as hand or foot actuated pumps, can also be used. A flow control device can be located inside the reservoir **208***a* or along the coupling fluid line **116***f*.

A control switch can be located for convenient use by an operator of the medical ultrasound system such that the operator does not have to take their hands off the handles of the ultrasound head. For example, the control switch, such as momentary switch, can be coupled with one of the handles so as to be operable by the operator's thumbs. As a further example, a foot activated control switch can also be used. Such a foot activated control switch can be coupled with the base unit directly in a convenient location, or can be a separate unit that can be positioned by the operator in a convenient location.

In another embodiment, coupling fluid extracted from a fluid system that has another function for the device **100** can be sprayed onto the skin for use as a coupling fluid. For example, water can be extracted from a cooling system and sprayed onto the patient's skin for use as a coupling fluid. For example, such a cooling system can be configured to circulate cooling water between a heat exchanger located within the ultrasound head and an external heat exchanger. The cooling water can absorb heat from the ultrasound head and release the heat at the external heat exchanger. After absorbing heat from the ultrasound head, the cooling water may be at a temperature where it can be sprayed onto a patient's skin without causing discomfort (i.e., not too cold and not too hot). The cooling system can be coupled with a supply reservoir or supply line to replenish the cooling system for any cooling water dispersed. Other fluid systems may be used.

FIG. **40** is a block diagram of (part of) a medical ultrasound system **100**, in accordance with an embodiment, having a fluid system **208** from which the coupling fluid can be obtained. Similar to the medical ultrasound system **100** discussed above, the medical ultrasound system **100** includes an ultrasound head **500**, one or more coupling fluid dispersion devices **582** coupled with the ultrasound head and a flow control subsystem **584** that is used to control the transfer of coupling fluid from the fluid system **208** to the one or more fluid dispersion devices **582** (FIG. **41**). The fluid system **208** can be any fluid system that contains a coupling fluid (e.g., water), such as a cooling system that is configured to use water to cool the ultrasound head so as to dissipate heat generated by the ultrasound transducer. The one or more coupling fluid dispersion devices **582** and the flow control subsystem **584** can include various components and configurations, such as those discussed above with reference to the medical ultrasound system **100** (shown in FIG. **39**).

FIG. **44**A is a perspective view of an ultrasound treatment head **500** having integrated spray nozzles **582**, in accordance with an embodiment. The integrated spray nozzles **582** can be distributed around the ultrasound treatment head **500** and oriented so as to disperse coupling fluid as discussed above. While two spray nozzles **582** are shown, one or more spray nozzles **582** can be used. For example, four spray nozzles can be used with each side of the ultrasound head **582** having one spray nozzle **582** disposed thereon. A spray nozzle **582** can be positioned and oriented so as to disperse coupling fluid via a spray pattern **70**. As discussed above, the one or more spray patterns **70** can be used to disperse and/or introduce coupling fluid on the patient's skin located underneath the flexible window **602** when the flexible window **602** is held adjacent to the patient's skin. In an embodiment, the one or more spray patterns **70** are configured so that they will fully cover the area

of the skin underneath the flexible window **602** when the flexible window is spaced a predetermined distance from the patient's skin.

FIG. **44**B provides an embodiment of aligning the therapy head **500** to grid lines drawn on the patient body, as described below. The therapy head may project alignment markers via guide lights **4402**, **4404** on the patient skin in the form of intersecting lines **4406**, **4408**, using lasers, LED lights or other light projecting elements. Such elements are readily available and may be incorporated on to the exterior of the therapy head to produce a guide indicia for the user. The light source may be directly presented on to the patient skin or through a reflective device (such as an oscillating reflector sometimes used with a laser to produce a visual scan line).

FIG. **42** is a perspective view of an ultrasound treatment head **500** having one or more spray nozzles **582** disposed within handles **584**, in accordance with an embodiment. A spray nozzle **582** can be disposed in a region of a handle **584** that is offset from the ultrasound therapy head **500** so that the spray pattern **86** can be directed towards the patient's skin located under the flexible window **602** when the ultrasound head is held adjacent to the patient's skin. Such an orientation can help to reduce the amount of movement of the ultrasound head from its position during coupling fluid application to its position during ultrasonic treatment or diagnostic test. The ultrasound head can be moved into contact with the skin after the coupling fluid has been applied. The one or more spray nozzles **582** can be located and oriented such that the resulting spray patterns **86** do not impinge upon the surgeon's or technician's hands while he or she is holding the ultrasonic head by the handles **584**.

FIG. **43** is a perspective view of an ultrasound treatment head **500** having one or more offset spray nozzles **592**, in accordance with an embodiment. The one or more spray nozzles **592** can be offset from the ultrasonic treatment head **500**, such as by way of one or more conduits **594**. As noted above, with such an offset the one or more spray nozzles **592** can be oriented to result in one or more spray patterns **96** that reduce the amount of movement of the ultrasound head from its position during coupling fluid application to its position during the ultrasonic treatment or diagnostic test. The spray conduits may be fixed or retractable.

To align the treatment head **500** on a patient body, a physician can first make a pattern of guidelines on the patient skin. The pattern of guidelines form one or more site areas. Guidelines allow a physician or user to place the treatment head on to the patient and proceed in an orderly fashion to treat the desired volume of tissue underneath the guidelines. The guidelines described herein are created using one of several guideline templates **800** (FIG. **45**). The treatment head **500** can include alignment markers either on the cartridge **600** and/or on the upper compartment **510**, so the user can align the therapy head **500** with the guidelines on the patient. The alignment markers can be located on the sides of the therapy head instead of the corners.

In an aspect of the assembled therapy head, using the features of the sides of the treatment head **600** as the alignment feature of the treatment head allows a user to treat variable sized areas that are less than the foot print of the therapy head on the patient's skin. If a complete grid is drawn on the patient, then the spacing of the lines of the grid do not have to line up with the size of the treatment head face (as long as they are smaller than the treatable area of the treatment head if spaces between sites are not desired). In effect the alignment is about the intersection of the horizontal and vertical lines of the grid rather than the area encompassed by the lines. This allows for a given treatment head with its physical treatment head area to not have to match the treatment area the user may want. Another way to state it is that a given treatment head area (size) can be used with multiple grid size templates based on the area and shape of the desired treatment region. Two examples are shown in FIGS. **46** and **47** with FIG. **47** having the grid be the same size as the treatment head, while FIG. **46** has the area of the site being about ¾ the area of the treatment head. Other variations are of course possible, but are not diagrammed so as to prevent the application from being prolix.

The grid itself is very quick and easy to draw compared to marking corners. With lines we end up with Number of Lines drawn=(rows+1)+(columns+1). With corners we end up with Number of corners=(rows+1)*(columns+1). So for example with 4 rows by 5 columns of treatment grid area we have 11 lines to draw versus **30** corners. An example template **800** is shown in FIG. **45**. The template **800** includes parallel guidelines **808** that allow a user to draw lines **806** on a patient. As an example, the user may draw one set of parallel lines, rotate the template **800** ninety degrees, and then draw a second set of lines that crosses the first set of lines. The two sets of lines then form a grid, such as one of the grid patterns shown in FIG. **46** or **47**.

If variable site areas and various templates are available to mark guidelines, then it can be desirable to minimize the chance of a user making an error by marking one size grid on the patient and then setting up the system to treat a different size site. To minimize this chance a feature that the system can read could be embedded into the template. Then after the user marks the patient they would then present the template to the system to have it read the feature, which may be a marked site area, for example, to set up the machine to match the patient markings. This feature could be implemented with an embedded barcode **802** on the marking template **800** or with radio frequency identification (RFID) type tags embedded into the template. In either case the user would "scan" the template into the system to allow entering the treatment screen to set up the system for the correct site area.

In use, a user places the template **800** on a patient, marks the gridlines **806** in one direction using the guidelines **808**, rotates the template ninety degrees, and marks a second set of guidelines **806**. Thus, a grid is formed. The user then aligns the side features on the treatment head **600** with two crossing lines. The center of the treatment head **600** thus is aligned where two guidelines cross.

If provided, the barcode **802** or other feature may be scanned or otherwise entered into the system after gridlines **806** are applied. In this manner, the settings of the treatment head **600** may be matched to a grid.

In an embodiment, the user is able to further define the area of treatment by using a user defined treatment tool. This embodiment provides a medical ultrasound system having the base unit with the previously described system electronics, user interface and ultrasound control electronics. The ultrasound therapy head is in electronic communication with the base unit, the therapy head has a high intensity focused ultrasound (HIFU) transducer disposed within it.

The user interface can include a touch screen interface. The touch screen can detect menu selections, and free hand drawings made either using a stylus or appendage of the user. A coordination operation coordinates the designs of free hand drawings and provides data to the ultrasound control electronics such that a user can define safe or "not safe" treatment zones through free hand drawings and enable the ultrasound control electronics to distinguish safe verse not safe treatment zones during a therapy regiment.

The ultrasound control electronics can prevent the transducer from broadcasting ultrasound energy into the "not safe" zones by controlling either the broadcasting of ultrasonic energy by the transducer, or the motor control for moving the transducer. In an embodiment, the ultrasound control electronics control a motor drive unit and prevent the motor drive unit from moving the HIFU transducer over the "not safe" treatment zones. In another embodiment, the ultrasound control electronics control the operation of the HIFU transducer and prevent the HIFU transducer from broadcasting HIFU energy over the "not safe" treatment zones. In a third embodiment the ultrasound control electronics prevent the movement over the no safe zone, and prevent the firing of the transducer over the "not safe" zones, and selects one or the other depending on the size and shape of the "not safe" zone so as to select the option most efficient for the system operation. Variations and/or combinations of these embodiments can be used.

In another embodiment, the system has a scanner for recording lines from a patient's body, the lines defining a treatment area and a non-treatment area. The system can detect through a preprogrammed detection method in the scanner, which are safe and not safe treatment zones. This may be achieved by using different colors on the safe verses not safe treatment areas (e.g. green and red), or using other indicia the scanner is able to detect and correlate with a preprogrammed detection method.

FIG. **48** is a simplified block diagram of an exemplary computer system **4000** in accordance with embodiments. The computer system typically includes at least one processor **4060** which communicates with a number of peripheral devices via a bus subsystem **4062**. These peripheral devices may include a storage subsystem **4064**, comprising a memory subsystem **4066** and a file storage subsystem **4068**, user interface input devices **4070**, user interface output devices **4072**, and a network interface subsystem **4074**. Network interface subsystem **4074** provides an interface to a communication network **4075** for communication with other imaging devices, databases, or the like.

The processor **4060** performs the operation of the computer systems **4000** using execution instructions stored in the memory subsystem **4066** in conjunction with any data input from an operator. Such data can, for example, be input through user interface input devices **4070**, such as the graphical user interface. Thus, processor **4060** can include an execution area into which execution instructions are loaded from memory. These execution instructions will then cause processor **4060** to send commands to the computer system **4000**, which in turn control the operation of the ultrasound control electronics. Although described as a "processor" in this disclosure and throughout the claims, the functions of the processor may be performed by multiple processors in one computer or distributed over several computers.

User interface input devices **4070** may include a keyboard, pointing devices such as a mouse, trackball, touch pad, or graphics tablet, a scanner, foot pedals, a joystick, a touch screen incorporated into the display, audio input devices such as voice recognition systems, microphones, and other types of input devices. In general, use of the term "input device" is intended to include a variety of conventional and proprietary devices and ways to input information into the computer system. Such input devices will often be used to download a computer executable code from a computer network or a tangible storage media embodying steps or programming instructions for any of the methods of the present invention.

User interface output devices **4072** may include a display subsystem, a printer, a fax machine, or non-visual displays such as audio output devices. The display subsystem may be a cathode ray tube (CRT), a flat-panel device such as a liquid crystal display (LCD), a projection device, or the like. The display subsystem may also provide non-visual display such as via audio output devices. In general, use of the term "output device" is intended to include a variety of conventional and proprietary devices and ways to output information from the computer system to a user.

Storage subsystem **4064** stores the basic programming and data constructs that provide the functionality of the various embodiments. For example, database and modules implementing the functionality of embodiments described herein may be stored in storage subsystem **4064**. These software modules are generally executed by processor **4060**. In a distributed environment, the software modules may be stored in a memory of a plurality of computer systems and executed by processors of the plurality of computer systems. Storage subsystem **4064** typically comprises memory subsystem **4066** and file storage subsystem **4068**.

Memory subsystem **4066** typically includes a number of memories including a main random access memory (RAM) **4076** for storage of instructions and data during program execution and a read only memory (ROM) **4078** in which fixed instructions are stored. File storage subsystem **4068** provides persistent (non-volatile) storage for program and data files, and may include a hard disk drive, re-writable non-volatile memory chips (such as Flash memory), a floppy disk drive along with associated removable media, a Compact Digital Read Only Memory (CD-ROM) drive, an optical drive, DVD, CD-R, CD-RW, or removable media cartridges or disks. One or more of the drives may be located at remote locations on other connected computers at other sites coupled to the computer system. The databases and modules implementing the functionality of the present invention may also be stored by file storage subsystem **4068**. The file storage subsystem may have directory and file descriptions for accessing the files, or it may store data without descriptions and rely on the databases and modules of the system to locate the data.

Bus subsystem **4062** provides a mechanism for letting the various components and subsystems of the computer system communicate with each other as intended. The various subsystems and components of the computer system need not be at the same physical location but may be distributed at various locations within a distributed network. Although bus subsystem **4062** is shown schematically as a single bus, alternate embodiments of the bus subsystem may utilize multiple busses.

The computer system **4000** itself can be of varying types including a personal computer, a portable computer, a workstation, a computer terminal, a network computer, a module in a circuit board, a mainframe, or any other data processing system. Due to the ever-changing nature of computers and networks, the description of the computer system depicted in FIG. **48** is intended only as a specific example for purposes of illustrating one embodiment. Many other configurations of the computer system are possible having more or less components than the computer system depicted in FIG. **48**.

FIG. **49** schematically illustrates a plurality of modules **4080** that may carry out embodiments. The modules **4080** may be software modules, hardware modules, or a combination thereof. If the modules are software modules, the modules will be embodied on a computer readable medium and processed by a processor **4060** in any of computer systems of the present invention.

A first module is a touch screen interface module **4100**. The touch screen interface module receives data from the touch screen, e.g., the user interface input device **4070**, as described

above. In addition, the touch screen interface module may be configured to receive body data **4102** and/or contour/mapping information **4104**.

Information from the touch screen interface module is forwarded to a treatment module **4106**. The treatment module **4106** generates treatment information and forwards that information to an ultrasound control module **4108**, which in turn controls the ultrasound electronics for the device.

The modules **4080** are designed so that an operator may enter information into a touch screen interface, which is in turn received by the touch screen interface module **4100**. The touch screen can detect menu selections and freehand drawings or other contact made with the touch screen made using either a stylus or a finger of the user.

For example, in FIG. **50**, a display **4110** for a touch screen is shown. In the display, menu selections are provided in the form of a treat button **4112** and a do not treat button **4114**. These menu selections may be provided on the touch screen **4110** or via another selection device. In addition, the selection items may be called something else, such as "safe" and "non-safe" zones or may use some other terminology.

The touch screen interface module utilizes the body data **4102** to display an image or representation of the body of the user, shown by the reference number **4116** on the touch screen display **4110**. In the embodiments shown in the drawings, only a portion of a user's abdomen is shown, but a larger part of the body may be represented.

The touch screen interface module **4100** may access the contour/mapping information **4104** and overlay that information on the body image **4116**. For example, a grid **4118** may be overlaid over the user. This grid may correspond with a grid that is drawn on the patient or projected on the patient.

In either event, the touch screen display **4110** shows some type of representation of a patient's body **4116** and provides some mapping or grid information that permits correlation between the patient's body and intended treatment areas on the body. Scanners, X-ray information, photographs, grid data or other information may be used to coordinate between the body data **4102** and the contour/mapping information **4104**.

FIG. **51** shows steps for providing treatment information to the ultrasound control module **4108** in accordance with embodiments. Beginning step **4130**, an image of the body, such as the image **4116**, is displayed for the user. This display may also include the contour/mapping information **4104**, such as by displaying the grid **4118**.

At step **4132**, the system receives user input regarding a desired treatment. For example, the user may press the treat button **4112** and then run his/her finger across a portion of the screen where treatment is desired. The user may also or alternatively hit the do not treat button **4114** and then select some areas for which treatment is not desired. As an example, the user may select a rib area of a patient for not having treatment, and an area having a high percentage of subcutaneous fat for treatment.

At step **4134**, a treatment plan is generated, and that treatment plan is sent to the ultrasound control module at **4136**. The ultrasound control module may then utilize that information to operate the therapy head and/or ultrasound treatment device accordingly, such as by turning on and off the transducer in accordance with areas selected by the user, or causing the transducer to avoid non-treatment areas. Selective treatment of particular areas is described in more detail in the following paragraphs.

FIG. **52** schematically illustrates modules **4150** for providing variable treatment to different areas of a user in accordance with embodiments. By "variable," we mean that treatment may be given to some areas and not others, and/or more treatment or dosage may be given to some areas than others. The treatment may be variable for a single positioning of the therapy head. Thus, even though the therapy head remains stationary, areas treated while the therapy head may receive varied dosages, or no dosage at all.

A patient data module **4152** provides patient data, such as the body data **4102** and/or the contour/mapping information **4104**, to a partial site treatment module **4154**. The partial site treatment module generates a treatment plan and provides that treatment plan to the ultrasound control module **4156**, which in turn controls the ultrasound control electronics of the device.

As an example, the therapy head may be designed to sweep over an area such as 1 inch by 1 inch, and the partial site treatment module **4154** may instruct the transducer to not move over the areas that are indicated as not having treatment and to move over and provide dosage to the areas indicated as having treatment. As an alternative, the transducer may pass over all areas, and the partial site treatment module **4154** may instruct the transducer to broadcast energy over treatment zones, and prevent the broadcast of energy over the areas that are indicated as not having treatment.

As an example, as shown in FIG. **53**, a treatment site **4160** includes two no treatment zones **4162**, **4164**, and a treatment zone **4166**. As stated above, as the therapy head is placed over the area **4160**, the transducer may either not travel to the no treatment zones **4162**, **4164**, or not broadcast in these zones. The therapy head will travel to and treat the treatment zone **4166**.

FIG. **54** shows steps for establishing a partial treatment of an area in accordance with embodiments. The process starts at **4202**, where the patient is evaluated by a medical professional. The medical professional marks boundaries of each planned treatment zone in step **4204**. These boundaries may be marked on a user or may be provided via the touch screen interface as described above.

At step **4206**, the treatment area is divided into treatment sites representing locations at which the therapy head will be placed. These treatment sites may represent a number of squares, which may be represented as a grid on the patient as defined above.

At step **4208**, a determination is made whether all sites have been treated. If so, the process ends. If not, the process branches to step **4210**, where a determination is made whether all of the next site is treated with a single dose level. If so, the process branches to step **4214**, where the next site is treated. The process then branches back to step **4208**. If all of the next site is not treated at one dose; i.e., part of it is treated and part of it is not, then step **4210** branches to step **4212**, where partial site treatment is conducted, such as described above with respect to FIGS. **52** and **53**. The process then branches back to step **4208**.

It can be understood that the process described above may also be used to treat some places in the site more than others. For example, in the site **4160** shown in FIG. **53**, one or more of the regions **4162**, **4164**, and/or **4166** may have a single dose of energy, whereas others may have two or more doses, or the dosage power may vary over boundaries. In either event, the partial site treatment module **4154** may provide appropriate instructions to the ultrasound control module **4156**.

FIG. **55** shows a method for partial site treatment in accordance with embodiments. Beginning at step **4232**, based on the boundaries in the treatment area (i.e., the boundaries defined for the entire patient treatment, not just for the particular therapy head site location), the boundaries are determined for a therapy head site. This is done via steps **4234** and

4236, where the boundaries are interactively defined within the site, and then the boundaries are updated and displayed within the site. The interactive process may occur, for example, via the touch screen **4110**. These boundaries form the regions within the site, such as is defined with respect to FIG. **53**. At steps **4238** and **4240**, the dosages within the regions defined by the boundaries are defined. This process may be done at the same time as establishing the boundaries. These dosages are interactively defined in step **4238** and updated and displayed in step **4240**. At step **4242**, the treatment is activated. The selected treatment occurs at step **4244**.

FIG. **56** shows a method for providing selective treatment at a site in accordance with embodiments. In the methods shown in FIG. **56**, the transducer moves over all locations under the therapy head, but the dosage is varied at locations, either turning the transducer off and on, or varying the dosage as desired. Beginning at step **4262**, a determination is made at what points in a scanning pattern boundaries would be crossed. That is, at what points would boundaries between treatment and no treatment areas be crossed (or, as described above, varied dosage level boundaries crossed).

At step **4264**, the transducer moves through the site in its normal scanning pattern (i.e., as if the entire site were to be treated). At step **4266**, a determination is made whether the site is complete. If yes, the process is finished. If no, then a determination is made in step **4268** whether a boundary has been crossed. If not, the process branches back to step **4264**, where the transducer continues to move through the site. If a boundary is crossed, step **4268** branches to step **4270**, where the dosage from the transducer is adjusted (e.g., turned off or on, or increased or decreased, as discussed above) and the process then branches back to step **4264**, where the transducer continues to scan the site.

FIG. **57** shows another method for selective treatment at a therapy head site in accordance with embodiments. In the methods shown in FIG. **57**, the scanning pattern is varied so as to provide selective treatment. Thus, if an area is not to be treated, the transducer can skip that area. Beginning at step **4292**, a scan pattern is created for each dosage region in the site. At step **4294**, the dosage and pattern for the next region is set. The transducer moves through the region in a scanning pattern for that region at step **4296**. At step **4298**, a determination is made whether the site is complete. If yes, then the process is done. If no, then determination is made at step **4300** whether the region is complete. If no, then the process branches back to step **4296**, and if yes, then the process branches back to step **4294**. The process continues until the site is complete.

Other variations are within the spirit of the present invention. Thus, while the invention is susceptible to various modifications and alternative constructions, a certain illustrated embodiment thereof is shown in the drawings and has been described above in detail. It should be understood, however, that there is no intention to limit the invention to the specific form or forms disclosed, but on the contrary, the intention is to cover all modifications, alternative constructions, and equivalents falling within the spirit and scope of the invention, as defined in the appended claims.

All references, including publications, patent applications, and patents, cited herein are hereby incorporated by reference to the same extent as if each reference were individually and specifically indicated to be incorporated by reference and were set forth in its entirety herein.

The use of the terms "a" and "an" and "the" and similar referents in the context of describing the invention (especially in the context of the following claims) are to be construed to cover both the singular and the plural, unless otherwise indicated herein or clearly contradicted by context. The terms "comprising," "having," "including," and "containing" are to be construed as open-ended terms (i.e., meaning "including, but not limited to,") unless otherwise noted. The term "connected" is to be construed as partly or wholly contained within, attached to, or joined together, even if there is something intervening. Recitation of ranges of values herein are merely intended to serve as a shorthand method of referring individually to each separate value falling within the range, unless otherwise indicated herein, and each separate value is incorporated into the specification as if it were individually recited herein. All methods described herein can be performed in any suitable order unless otherwise indicated herein or otherwise clearly contradicted by context. The use of any and all examples, or exemplary language (e.g., "such as") provided herein, is intended merely to better illuminate embodiments of the invention and does not pose a limitation on the scope of the invention unless otherwise claimed. No language in the specification should be construed as indicating any non-claimed element as essential to the practice of the invention.

Preferred embodiments of this invention are described herein, including the best mode known to the inventors for carrying out the invention. Variations of those preferred embodiments may become apparent to those of ordinary skill in the art upon reading the foregoing description. The inventors expect skilled artisans to employ such variations as appropriate, and the inventors intend for the invention to be practiced otherwise than as specifically described herein. Accordingly, this invention includes all modifications and equivalents of the subject matter recited in the claims appended hereto as permitted by applicable law. Moreover, any combination of the above-described elements in all possible variations thereof is encompassed by the invention unless otherwise indicated herein or otherwise clearly contradicted by context.

What is claimed is:

1. A cartridge for use with an ultrasound therapy head, the ultrasound therapy head including a body with a first electrical connector, and first and second fluid connectors, the cartridge comprising:

a sealed substantially liquid tight enclosure, the enclosure being removably mountable to the body and having an interior and an acoustic window;

a second electrical connector being removably connectable to the first electrical connector;

an ultrasound transducer mounted in the interior and in electrical communication with the second electrical connector, the transducer configured and arranged, when the cartridge is connected to the body, to deliver ultrasonic energy through the acoustic window when energized via the first and second connectors;

a transducer coupling liquid sealed within the liquid tight enclosure; and

a fluid heat exchanger mounted in the interior and having third and fourth fluid connectors removably connectable to the first and second fluid connectors, respectively, the fluid heat exchanger configured to receive, when the cartridge is connected to the body, a flow of fluid via the fluid connectors, the flow of fluid for cooling the coupling fluid;

the cartridge being configured so that the cartridge is connectable to the body, with the first electrical connector connecting to the second electrical connector and the first and second fluid connectors connecting to the third and fourth fluid connectors, respectively, without removing the transducer from the sealed enclosure.

2. The cartridge of claim **1**, wherein the transducer coupling liquid comprises a salt and water solution.

3. The cartridge of claim **2**, wherein the salt comprises calcium chloride.

4. The cartridge of claim **3**, wherein the solution comprises approximately 21% calcium chloride by weight.

5. The cartridge of claim **2**, wherein the water is degassed water.

6. The cartridge of claim **1**, wherein:

the body comprises a motor drive unit;

the transducer is mounted for movement in the interior; and

the transducer is removably connectable to the motor drive unit when the body is connected to the cartridge such that the transducer is movable by the motor drive unit when connected.

7. The cartridge of claim **6**, wherein one of the transducer and the motor drive unit comprises a shaft, and the other of the motor drive unit and the transducer comprises a recess, and wherein the shaft fits in the recess when the transducer is connected to the motor drive unit.

8. The cartridge of claim **1**, wherein the cartridge comprises a mechanical pressure compensator in fluid connection with the interior, the compensator permitting adaptation to variation in pressure in the interior.

9. The cartridge of claim **1**, wherein the cartridge comprises plastic.

10. The cartridge of claim **9**, wherein the cartridge comprises polyetherimide.

11. The cartridge of claim **1**, wherein the body comprises a cooling system that is mounted to the body and that, when connected to the heat exchanger, routes a cooling fluid through the heat exchanger.

* * * * *