HESAI

www.hesaitech.com

QT128C2X

128-Channel Short-Range Mechanical Lidar User Manual

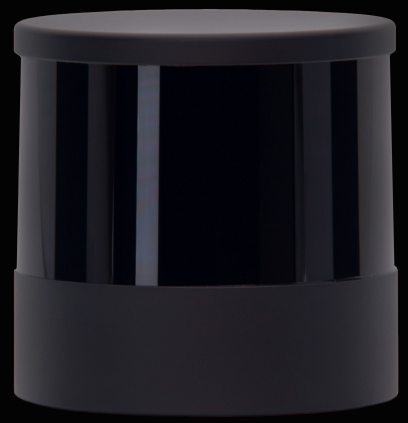

HESAI Wechat

Contents

About This Manual **1**

Safety Notice **2**

1 Introduction **9**

1.1 Operating Principle 9
1.2 Lidar Structure 10
1.3 Channel Distribution 11
1.4 Specifications 13

2 Setup **15**

2.1 Mechanical Installation 15
2.2 Interfaces 19
2.3 Connection Box (Optional) 22
2.4 Get Ready to Use 27

3 Data Structure **28**

3.1 Point Cloud Data Packet 29

4 Web Control **42**

4.1 Home 43
4.2 Settings 45
4.3 Azimuth FOV 52
4.4 Operation Statistics 55
4.5 Monitor 56
4.6 Upgrade 57
4.7 Log 58
4.8 Security 59
4.9 Login 69

5 Communication Protocol **70**

6 Sensor Maintenance **71**

7 Troubleshooting **73**

Appendix I Channel Distribution **77**

Appendix II Absolute Time of Point Cloud Data **85**

Appendix III Power Supply Requirements **93**

Appendix IV Legal Notice **95**

Doc Version: Q03-en-231210

About This Manual

Please make sure to read through this user manual before your first use and follow the instructions herein when you operate the product. Failure to comply with the instructions may result in product damage, property loss, personal injuries, and/or a breach of warranty.

■ Access to This Manual

To obtain the latest version:

- Visit the Download page of Hesai's official website: https://www.hesaitech.com/downloads/
- Or contact your sales representative at Hesai
- Or contact Hesai's technical support team: service@hesaitech.com

■ Technical Support

If your question is not addressed in this user manual, please contact us at:

service@hesaitech.com
https://www.hesaitech.com/technical-support/
https://github.com/HesaiTechnology (Please leave your questions under the corresponding GitHub projects.)

■ Legends

⚠ Warnings: instructions that must be followed to ensure safe and proper use of the product.

💡 Notes: additional information that may be helpful.

Hesai v. Ouster, IPR2023-01422
Ouster Ex. 2013 - Page 3 of 98

Safety Notice

- Please check the certification information on the product's nameplate and read through the corresponding certification warnings. If specific users require not to present certification information on the nameplate, please follow the agreed-to arrangements.
- If you incorporate this lidar product into your product(s), you are required to provide this user manual (or the means to access this user manual) to the intended users of your product(s).
- This lidar product is intended as a component of an end product. It is the responsibility of the end-product supplier to assess the risk of use in accordance with applicable standards, and inform the intended user of safety-related information.
- Should there be other agreements with specific users, the other agreements shall apply.
- Before using a product, please confirm with Hesai the development maturity of the product in a timely manner. For products still in development, Hesai makes no warranty of non-infringement nor assumes any responsibility for quality assurance.

■ Special Warnings

Laser Safety

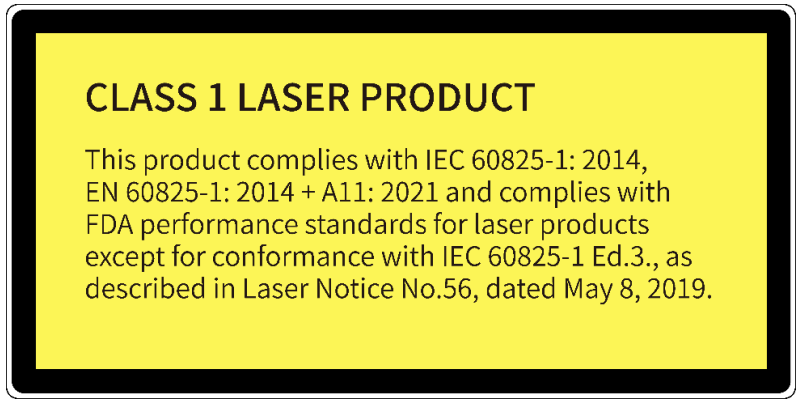

Hesai v. Ouster, IPR2023-01422
Ouster Ex. 2013 - Page 4 of 98

Hot Surface

Hot parts!
Burned fingers when handling the parts.
Wait one-half hour after switching off before handling parts.

Abnormalities

In any of the circumstances listed below, stop using the product immediately:

- You suspect that the product malfunctions or is damaged. For example, the product produces significant noise or is visibly vibrating.
- You or other people in the nearby environment feel discomfort.
- Any device or equipment in the nearby environment malfunctions.

Meanwhile, contact Hesai Technology or an authorized Hesai Technology service provider for more information on product disposal.

Prohibition of Disassembly

Unless expressly agreed to in writing by Hesai Technology, do NOT disassemble the product.

■ Operating Environment

Radio Frequency Interference

- Please check the certification information on the product's nameplate and read through the corresponding certification warnings. If specific users require not to present certification information on the nameplate, please follow the agreed-to arrangements.
- Although the product is designed, tested, and manufactured to comply with the regulations on RF radiation (such as FCC, CE-EMC, or KCC), the radiation from the product may still influence electronic devices.

Hesai v. Ouster, IPR2023-01422
Ouster Ex. 2013 - Page 5 of 98

Vibration

- If significant mechanical shocks and vibration may exist in the product's operating environment, please contact Hesai's technical support team to obtain the shock and vibration limits of this product model. Exposure to over-the-limit shocks or vibration may damage the product.
- Make sure to package the product in shock-proof materials to avoid damage during transport.

Explosive Atmosphere and Other Air Conditions

- Do NOT use the product in any area where potentially explosive atmospheres are present, such as high concentrations of flammable chemicals, vapors, or particulates (including particles, dust, and metal powder) in the air.
- Do NOT expose the product to high concentrations of industrial chemicals, including liquefied gases that are easily vaporized (such as helium). Such exposure can damage or weaken the product's function.

Ingress Protection

Please check the product's user manual for its IP rating (refer to the *Specifications* section). Make sure to avoid any ingress beyond that rating.

Operating Temperature

Please check the product's user manual for its operating temperature (refer to the *Specifications* section). Make sure not to exceed the operating temperature range.

Recommended Storage Conditions

Store the product in a dry, well-ventilated place. The recommended ambient temperature is 23±5°C, and the humidity between 30% and 70%.

Light Interference

Certain precision optical instruments may be interfered by the laser light emitted from the product. Please check all the instructions of these instruments and take preventive measures if necessary. For example, certain product models are equipped with protective covers, which can be used to block laser light emission when the product is temporarily not used for measurement.

Hesai v. Ouster, IPR2023-01422
Ouster Ex. 2013 - Page 6 of 98

■ Personnel

Recommended Operator Qualifications

The product should be operated by professionals with engineering backgrounds or experience in operating optical, electrical, and mechanical instruments. Please follow the instructions in this manual when operating the product and contact Hesai technical support if needed.

Medical Device Interference

- Some components in the product can emit electromagnetic fields. If the product operators or other people in the nearby environment wear medical devices (such as cochlear implants, heart pacemakers, and defibrillators), make sure to consult the physicians and medical device manufacturers for medical advice, such as determining whether it is safe to work near the product.
- If you suspect that the product is interfering with your medical device, stop using the product immediately.

■ Installation and Operation

Power Supply

- You are recommended to use only the cables and power adapters provided by Hesai Technology.
- If you are to design, configure, or select the power supply system (including cables) for the product, make sure to comply with the electrical specifications in the product's user manual (refer to the *Specifications* section and the *Power Supply Requirements* section); for technical support, please contact Hesai Technology. Do NOT use off-spec or damaged cables or adapters.

Electrical Interface

- Before powering on the product, make sure the electrical interfaces are dry and clean. Do NOT power on the product in a humid environment.
- Please check the *Interfaces* section in the product's user manual and strictly follow the instructions on plugging/unplugging the connector. If abnormalities already exist (such as bent pins, broken cables, and loose screws), stop using the product and contact Hesai technical support.
- To prevent breakdown, turn off the power source before connection and disconnection.

Hesai v. Ouster, IPR2023-01422
Ouster Ex. 2013 - Page 7 of 98

Eye Safety

The product is a Class 1 laser product. It satisfies the requirements of:

- IEC 60825-1:2014
- EN 60825-1:2014+A11:2021
- 21 CFR 1040.10 and 1040.11 except for deviations (IEC 60825-1 Ed.3) pursuant to Laser Notice No.56, dated May 8, 2019.

Please follow the standard laser safety guidelines accordingly.

CAUTION: use of controls or adjustments or performance of procedures other than those specified herein may result in hazardous radiation exposure.

For maximum self-protection, it is strongly warned NOT to look into the transmitting laser through a magnifying product (microscope, eye loupe, magnifying glass, etc.).

This product does not have a power switch. It starts operating once connected to power. During operation, the entire cover lens / optical window can be regarded as the product's laser emitting window; looking at the cover lens / optical window can be regarded as looking into transmitting laser.

Product Enclosure

- The product contains metal, glass, plastic, as well as sensitive electronic components. In case the product has been dropped and burnt, stop using it immediately and contact Hesai technical support.
- Do NOT squeeze or pierce the product. If the product enclosure is broken, stop using it immediately and contact Hesai technical support.
- Certain product models contain high-speed rotating parts. To avoid potential injuries, do NOT operate the product if the enclosure is loose.
- Before operating the product, make sure it is properly and securely mounted. The mounting should prevent the product from leaving its mounting position in case of external forces (such as collisions, high winds, and stone impacts).
- If the product enclosure consists of fins or grooves, please wear gloves when handling the product. Applying too much pressure with your bare hands may cause cuts, bruises or other injuries.

Hesai v. Ouster, IPR2023-01422
Ouster Ex. 2013 - Page 8 of 98

Product Enclosure: Cover lens / optical window

- Do NOT apply protective film, wax or any other substance on the cover lens / optical window.
- To keep the product's cover lens / optical window from fingerprints and other stains, do NOT touch the cover lens / optical window with bare hands. If the cover lens / optical window is already stained, please refer to the cleaning method in the *Sensor Maintenance* section of the user manual.
- To prevent scratches, do NOT touch the product's cover lens / optical window with hard or sharp objects. If scratches already exist, stop using the product and contact Hesai technical support. Severe scratches may affect the quality of the product's point cloud data.
- Before installing any exterior part, please ensure that each exterior part and its movable area do not overlap the detection blind zone of lidar product. For questions on determining the detection blind zone, contact Hesai technical support.

Hot Surface

During operation or a time period after operation, the product's enclosure can be hot.

- To prevent discomfort or even burns, do NOT touch the product's enclosure with your skin.
- To prevent fires, do NOT touch the product's enclosure with flammable materials.

Certain product models support active heating of the cover lens / optical window to reduce the impact of ice and frost. Users can turn off this function.

- While active heating is ON, please avoid direct skin contact with the cover lens / optical window.
- For the location of the cover lens, please refer to the Introduction section in the product's user manual.

Peripherals

The product may be used along with accessories and devices, such as suction cup mounts, extension cables, power supplies, network devices, GPS/PTP devices, and cleaning equipment. Please refer to all relevant specifications in the product's user manual, or contact Hesai technical support. Using off-spec or unsuitable devices may result in product damage or even personal injuries.

Firmware and Software Upgrading

Make sure to use only the upgrade files provided by Hesai Technology. Make sure to observe all the instructions provided for that upgrade file.

Hesai v. Ouster, IPR2023-01422
Ouster Ex. 2013 - Page 9 of 98

Custom Firmware and Software

- Before using a custom version of firmware and software, please thoroughly understand the differences in functions and in performance between this custom version and the standard version.
- Make sure to strictly follow all the instructions and safety precautions provided for that custom version. If the product does not function as anticipated, stop using the product immediately and contact Hesai technical support.

Point Cloud Data Processing

Certain product models support one or more point cloud data processing features, include but are not limited to: Noise Filtering, Interstitial Points Filtering, Retro Multi-Reflection Filtering, and Non-Linear Reflectivity Mapping.
These features are configurable and are intended only to assist the user in extracting information from the point cloud data. Users are in full control of whether to use any of these features. Moreover, users are responsible for analyzing the product's intended application scenarios and evaluating the risk of enabling one or more of these features in combination.
The supported features for this product model can be found on web control.

■ Repair and Maintenance

For product repair or maintenance issues, please contact Hesai Technology or an authorized Hesai Technology service provider.

Repair

Unless expressly agreed to in writing by Hesai Technology, do NOT by yourself or entrust any third party to disassemble, repair, modify, or retrofit the product. Such a breach:

- can result in product damage (including but not limited to water resistance failure), property loss, and/or personal injuries;
- shall constitute a breach of warranty.

Hesai v. Ouster, IPR2023-01422
Ouster Ex. 2013 - Page 10 of 98

1 Introduction

This manual describes the specifications, installation, and data format of QT128C2X.

1.1 Operating Principle

Distance Measurement: Time of Flight (ToF)

1) A laser diode emits a beam of ultrashort laser pulses onto the target object.
2) The laser pulses are reflected after hitting the target object. The returning beam is detected by an optical sensor.
3) Distance to the object can be accurately measured by calculating the time between laser emission and receipt.

$d = \frac{ct}{2}$	d: distance c: speed of light t: travel time of the laser beam

Figure 1.1 Distance Measurement Using Time of Flight

Hesai v. Ouster, IPR2023-01422
Ouster Ex. 2013 - Page 11 of 98

1.2 Lidar Structure

Laser emitters and receivers are attached to a motor that rotates horizontally.

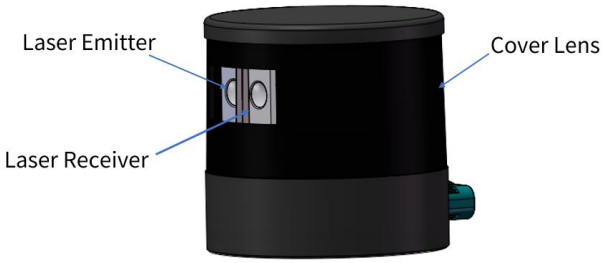

Figure 1.2 Partial Cross-Sectional Diagram

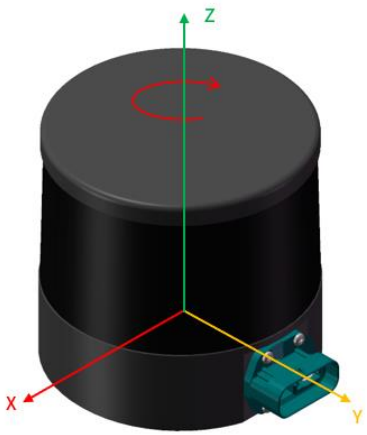

Figure 1.3 Coordinate System (Isometric View)

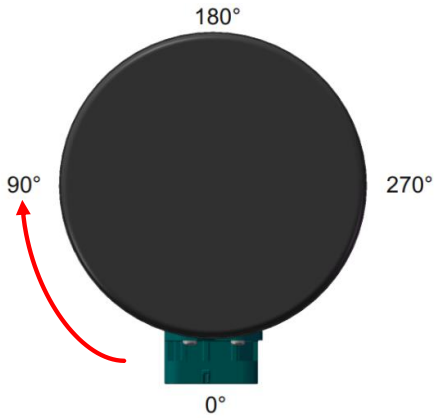

Figure 1.4 Default Rotation Direction (Top View)

The lidar's coordinate system is illustrated in Figure 1.3. Z-axis is the axis of rotation.
By default, the lidar rotates clockwise in the top view. To select counterclockwise rotation, see Section 4.2 (Web Control - Settings).
The origin's exact position is shown in Figure 1.6, as a red dot. All measurements are relative to the origin.

Lidar azimuthal position is defined in Figure 1.4. Y-axis corresponds to 0°.
Each laser channel has an intrinsic azimuth offset. The horizontal center of the emitter-receiver array defines the lidar's azimuthal position.
For example, when the horizontal center passes the 90° position:

- the lidar is at the 90° position;
- the Azimuth field in the corresponding data block in the Point Cloud Data Packet will be 90°.

Hesai v. Ouster, IPR2023-01422
Ouster Ex. 2013 - Page 12 of 98

1.3 Channel Distribution

The vertical resolution is unevenly distributed across all channels, as illustrated in Figure 1.5 and detailed in Appendix I (Channel Distribution).

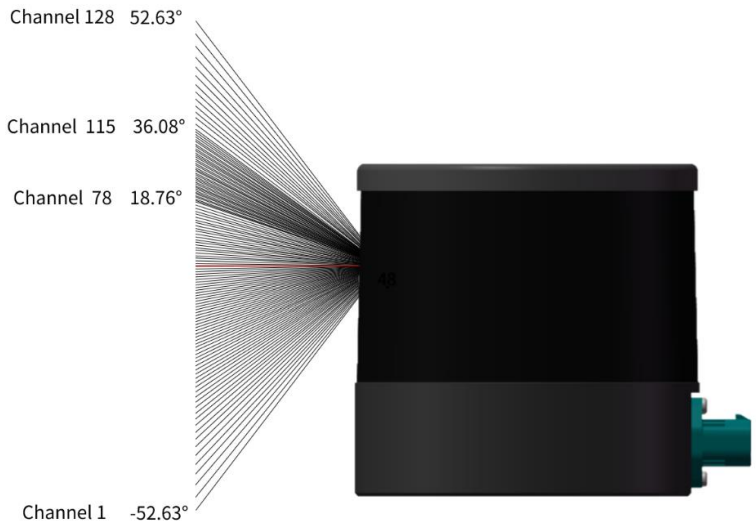

Figure 1.5 Channel Vertical Distribution

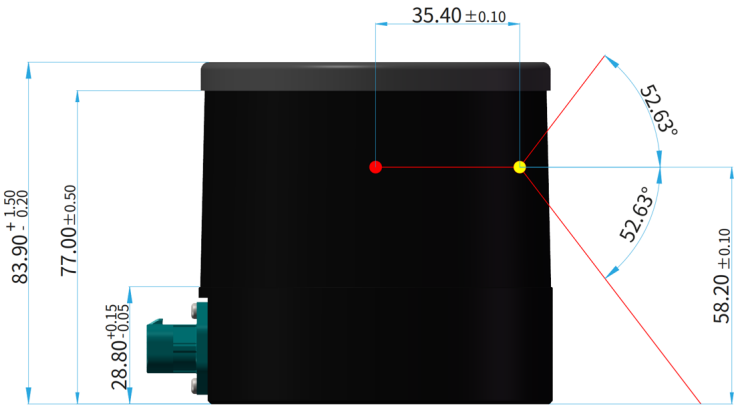

Figure 1.6 Laser Firing Position (Unit: mm)

Each channel has an intrinsic angle offset, both horizontally and vertically. The offsetted angles are recorded in this lidar unit's **angle correction file**. In case you need to obtain the file again:

- send PTC command 0x05, as described in Hesai TCP API Protocol (Section 5);
- or export the file using PandarView 2 (see the PandarView 2 user manual).

The angle correction file lists the elevation and azimuth of each channel's outgoing beam, relative to the center of the exit pupil (shown as a yellow dot in Figure 1.6).

EEFF	1	1
Laser id	Elevation	Azimuth
1	-52.626	10.108
2	-51.028	9.719
3	-49.514	9.384
…	…	…
128	52.626	-10.108

Figure 1.7 Illustration of the Angle Correction File

Hesai v. Ouster, IPR2023-01422
Ouster Ex. 2013 - Page 14 of 98

1.4 Specifications

SENSOR		
Scanning Method	Mechanical Rotation	
Channel	128	
Instrument Range	0.05 to 50 m	
Range Capability ①	Channels 9 to 120:	20 m
	Channels 1 to 8, 121 to 128:	15 m
	(both at 10% reflectivity)	
Range Accuracy ②	±3 cm (typical)	
Range Precision ②	2 cm (typical)	
FOV (Horizontal)	360°	
Resolution (Horizontal)	Channels 65 to 128:	0.4° (10 Hz)
		0.8° (20 Hz)
	Channels 1 to 64:	0.8° (10 Hz)
		1.6° (20 Hz)
FOV (Vertical)	105.2° (-52.6° to +52.6°)	
Resolution (Vertical)	Channels 78 to 115	0.4° to 0.5°
	Other channels	0.8° to 1.6°
Frame Rate	10 Hz, 20 Hz	
Return Modes	Single Return	
	(First, Second, Last, Strongest)	
	Dual Return (5 modes)	

MECHANICAL/ELECTRICAL/OPERATIONAL		
Wavelength	940 nm	
Laser Class	Class 1 Eye Safe	
Ingress Protection	IP6K7 & IP6K9K	
Dimensions	Height:	83.9 mm
	Top/Bottom:	Φ85.9/87.0 mm
Rated Voltage Range ③	DC 12 to 24 V	
PowerConsumption ④	12 W	
Operating Temperature	-40°C to 85°C	
Storage Temperature	-40°C to 95°C	
Weight	0.7 kg	

DATA I/O		
Data Transmission	Ethernet (Automotive, 1000BASE-T1)	
	Slave Mode	
Measurements	Distance, Azimuth, Reflectivity	
Valid Data Points	Single Return:	864,000 points/sec
	Dual Return:	1,728,000 points/sec
Point Cloud Data Rate	Single Return:	42.08 Mbps
	Dual Return:	84.16 Mbps
Clock Source	PTP	
PTP Clock Accuracy	⩽1 μs (typical)	
PTP Clock Drift ⑤	⩽1 μs/s	

Hesai v. Ouster, IPR2023-01422
Ouster Ex. 2013 - Page 15 of 98

Specifications are subject to change. Please refer to the latest version. (Continued on the next page)
(Continued)

① Range Capability
- Test conditions: normal incidence, 0 to 100 klux ambient illuminance, PoD (probability of detection) > 90%, FAR (false alarm rate) < 10E-5.
- See Appendix I (Channel Distribution) for the test data of each channel.

② Range Accuracy and Range Precision
- May vary with range, temperature, and target reflectivity.
- Range accuracy: difference between the average of multiple measurements and the true value, measured under the same conditions.
- Range precision: standard deviation of multiple measurements, measured under the same conditions.

③ Input Voltage
- The input voltage at the lidar's connector shall be within 9 to 32 V DC
- Refer to Appendix III (Power Supply Requirements)

④ Power Consumption: typical value
- Test conditions: 85°C, 20Hz
- Not including accessories such as the connection box.
- Refer to Appendix III (Power Supply Requirements)

⑤ PTP Clock Drift
- Defined as the drift at a constant temperature after the lidar (slave clock) loses connection to the PTP master.

Hesai v. Ouster, IPR2023-01422
Ouster Ex. 2013 - Page 16 of 98

2 Setup

2.1 Mechanical Installation

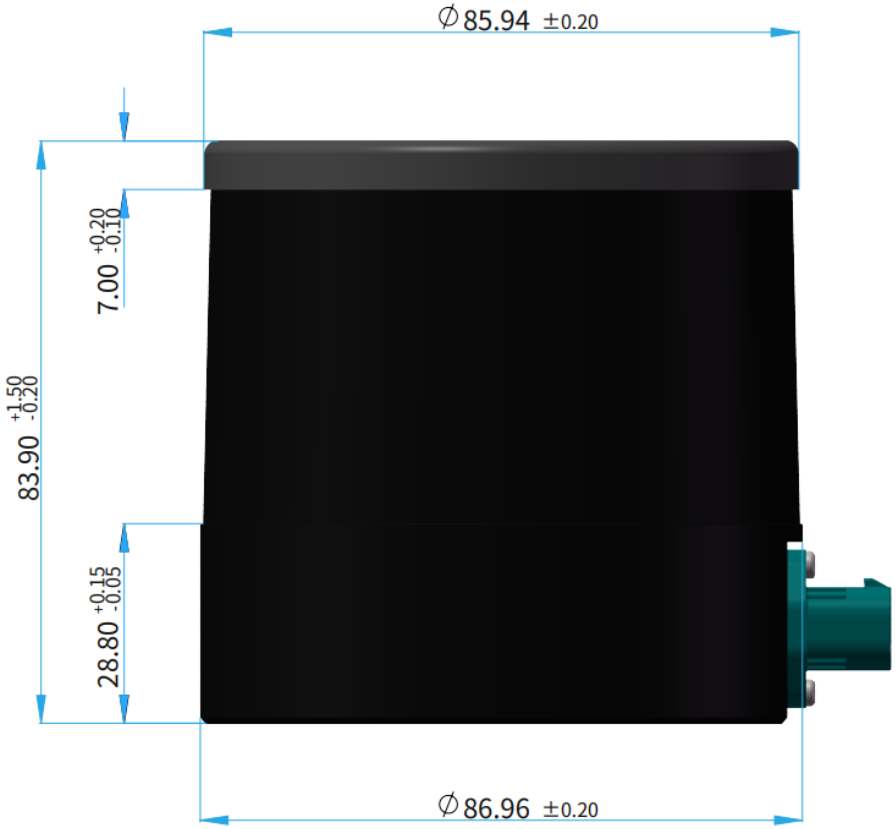

Figure 2.1 Left View (Unit: mm)

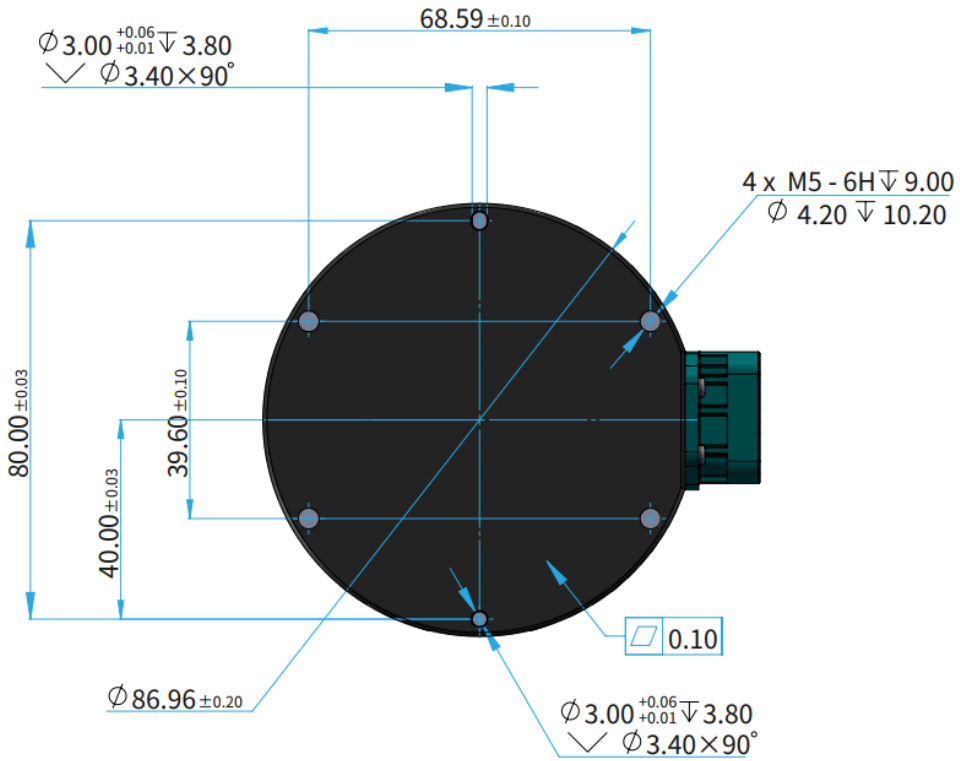

Figure 2.2 Mounting Base (Unit: mm)

2.1.1 Recommended Installation

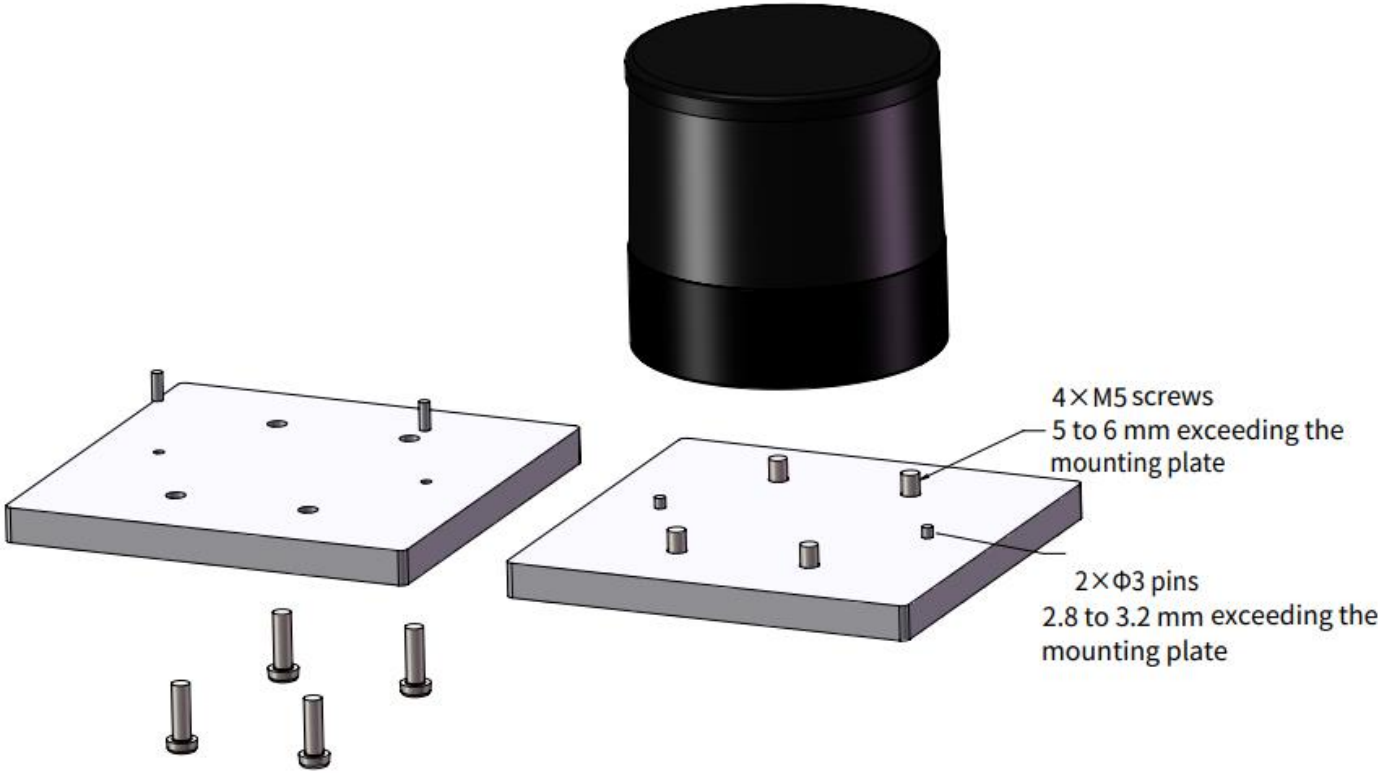

Figure 2.3 Recommended Installation

2.1.2 Notes on Screw Installation

■ Screw Type

SEMS screws (with pre-attached flat washers and lock washers) are recommended. Property class should be at least 4.8.

■ Threadlocker

Before fastening a screw, apply 1 or 2 dots of threadlocker in the thread fit area. LOCTITE® 263 Threadlocker is recommended.
To ensure curing in place, wait for at least 12 hours before operating the lidar.

■ Screw Torque

The base material of the threaded holes is aluminum alloy instead of steel. Refer to the following table for the appropriate screw torque.

Thread Size	Recommended Screw Torque
M3	0.5 to 0.6 Nm
M4	1 to 1.5 Nm
M5	2 to 2.5 Nm
M6	3.5 to 4 Nm

■ Thread service life

25 times.
Each screwing counts as one time, so as each unscrewing.

Hesai v. Ouster, IPR2023-01422
Ouster Ex. 2013 - Page 20 of 98

2.2 Interfaces

Rosenberger part number: E6S14M-40MT5-Z (male socket, on the lidar), E6K14M-1CAZ5-Z (female plug, connecting to the lidar)

May be different for customized models. The mechanical drawings and data for customized models will be provided separately from this manual and those drawings and data shall prevail.

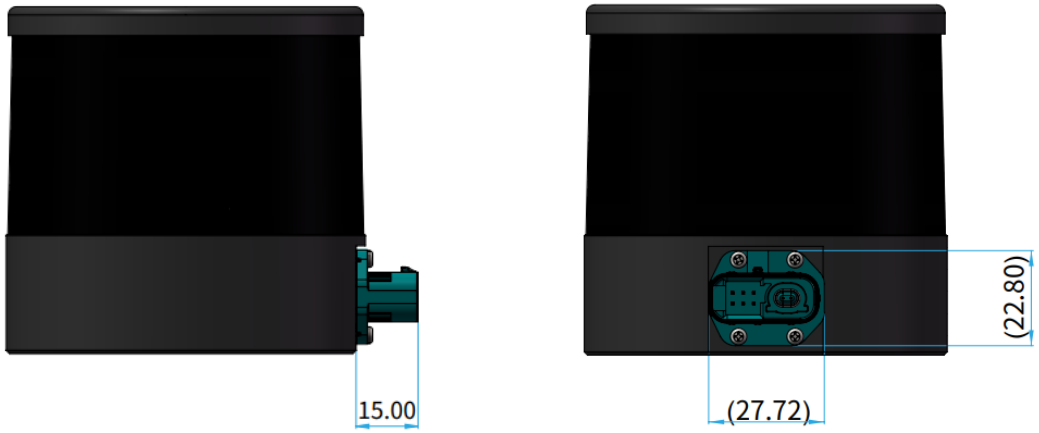

Figure 2.4 Connector Dimensions (Unit: mm)

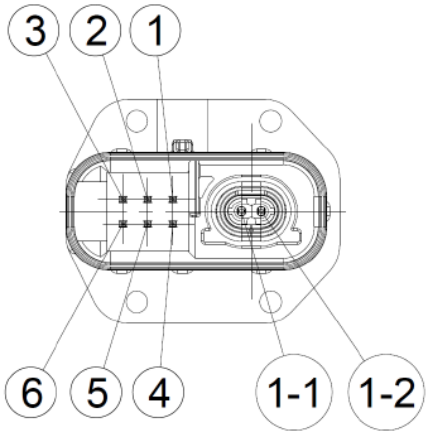

Figure 2.5 Connector Pinout (8-pin)

Hesai v. Ouster, IPR2023-01422
Ouster Ex. 2013 - Page 21 of 98

2.2.1 Pin Description

Pin #	Signal	Voltage
1	VIN	12 to 24 V
2	Reserved	0 to 3.3 V
3	Reserved	0 to 3.3 V
4	NC	-

Pin #	Signal	Voltage
5	Reserved	0 to 3.3 V
6	GND	0 V
1-1	Ethernet_TRX+	-1 to 1 V
1-2	Ethernet_TRX-	-1 to 1 V

⚠ Please plug and unplug the connector with care. Do not pull, twist, or squeeze it with excessive force.

2.2.2 Cables (Ethernet)

OD (outside diameter) = $4.0^{0}_{-0.4}$ mm

Minimum bend radius:

Single	3 * OD
Multiple (>10x)	10 * OD

Hesai v. Ouster, IPR2023-01422
Ouster Ex. 2013 - Page 22 of 98

2.2.3 Connector Use

Connection	Disconnection
• Turn off the power source. • Push the plug straight into the socket until a click is heard. • Push the red CPA to the bottommost position until a click is heard.	• Turn off the power source. • Pull the red CPA with your fingernail until a click is heard. • Firmly press down the water blue latch while pulling the plug from the socket.

Warnings

- DO NOT attempt to force open a connection by pulling on the cables or by twisting the connectors in any way. Doing so can loosen the connectors' shells, or even damage the contacts.
- In case a connector's shell is accidentally pulled off, stop using the connector and contact Hesai technical support.
- DO NOT attempt to assemble the connector's shell and cable collet; DO NOT connect a connector without its shell. Doing so may damage the lidar's circuits.
- Before connection, check the pins on the socket and the holes on the plug. In case of bent pins or damaged holes, stop using the connector and contact Hesai technical support.

Connector mating cycles: minimum 10

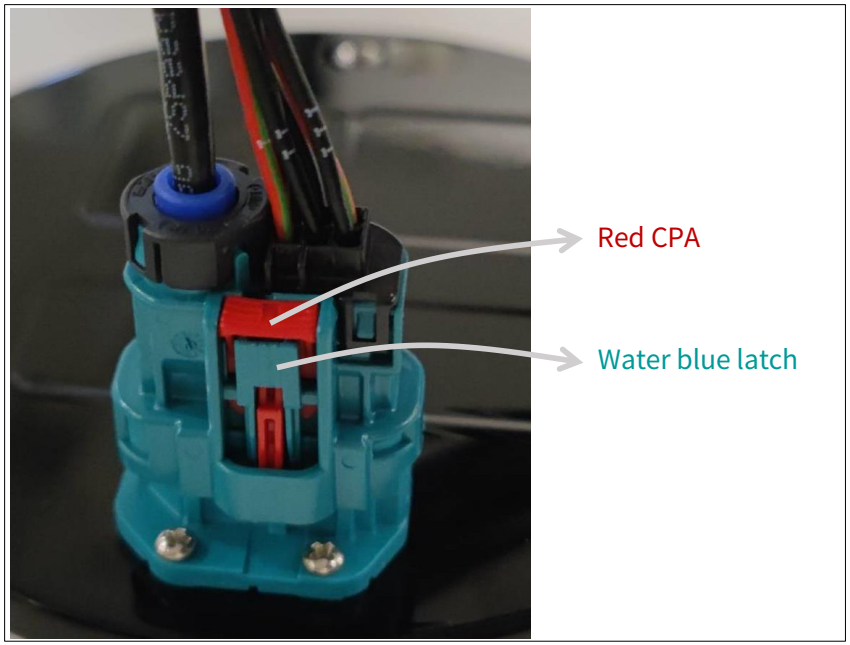

Figure 2.4 Rosenberger Connection/Disconnection

Hesai v. Ouster, IPR2023-01422
Ouster Ex. 2013 - Page 23 of 98

2.3 Connection Box (Optional)

Users may connect the lidar directly or using a connection box.
The connection box converts automotive 1000BASE-T1 to 1000BASE-T typical Ethernet, as well as providing a power port.

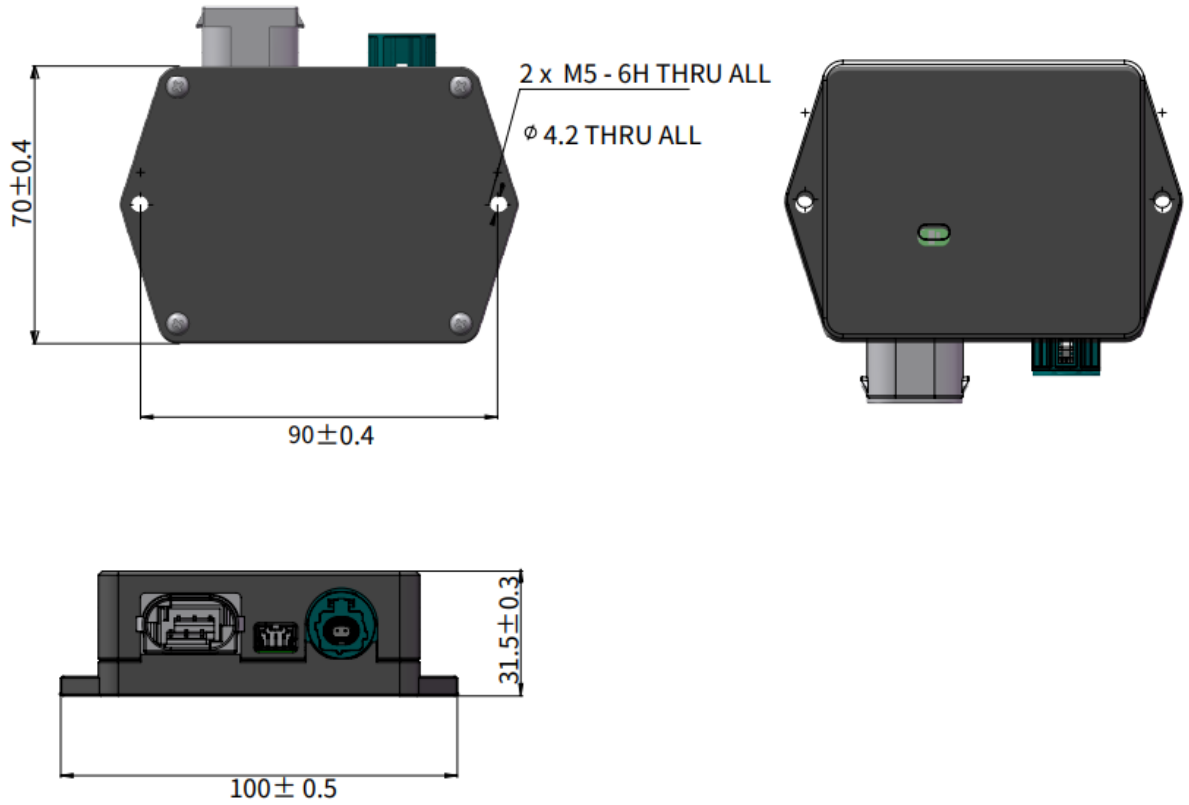

Figure 2.5 Connection Box - Connection (Unit: mm)

2.3.1 Connection Box Interfaces

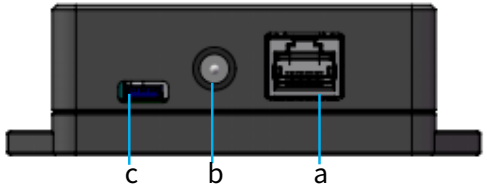

Figure 2.6 Connection Box (Front)

Port #	Port Name	Description
a	Standard Ethernet Port	RJ45, 1000BASE-TX Ethernet
b	Power Port	Connects to a DC power adapter Connector part number: PJ-057AH
c	Reserved Port	Do not connect this port to external signals

Hesai v. Ouster, IPR2023-01422
Ouster Ex. 2013 - Page 25 of 98

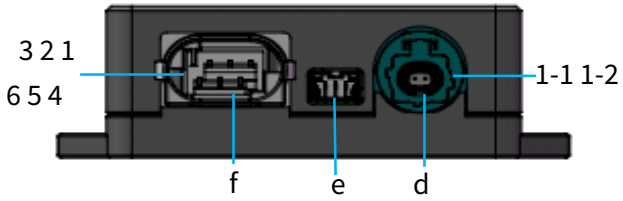

Figure 2.7 Connection Box (Back)

Port #	Port Name	Description
d	Connection to lidar	See Section 2.2.1 (Pin Description). Connector (socket): Rosenberger, E6S24A-40MT5-Z Recommended wire connector (plug): Rosenberger, E6K14A-1CAZ5-Z
e	Reserved Port	Do not connect this port to external signals
f	Connection to lidar	See Section 2.2.1 (Pin Description). Connector (socket): TE Connectivity, 1241637-1 Recommended wire connector (plug): TE Connectivity, 1-967616-1

Hesai v. Ouster, IPR2023-01422
Ouster Ex. 2013 - Page 26 of 98

2.3.2 Connection

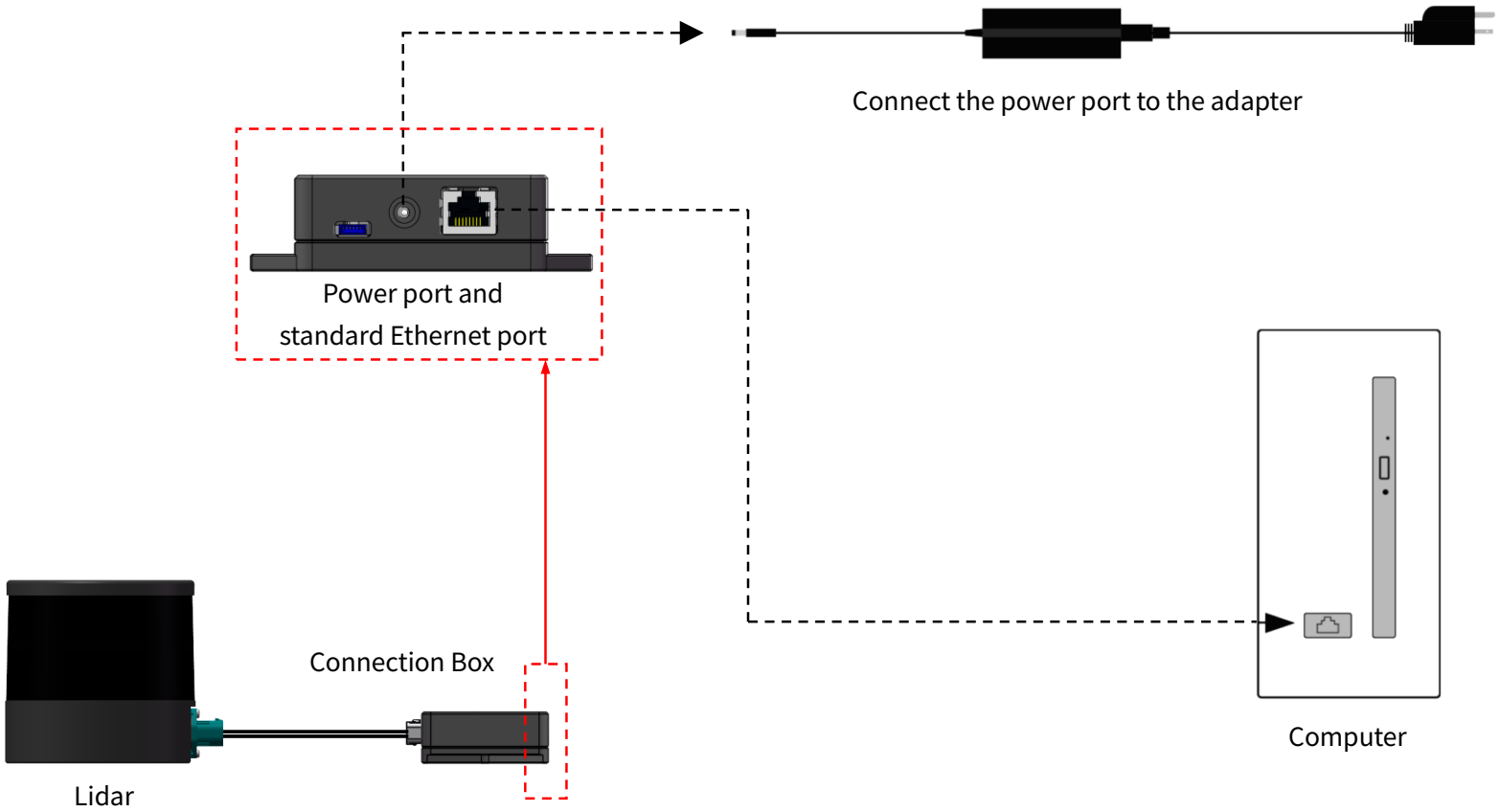

Figure 2.8 Connection with PTP (Software Simulation)

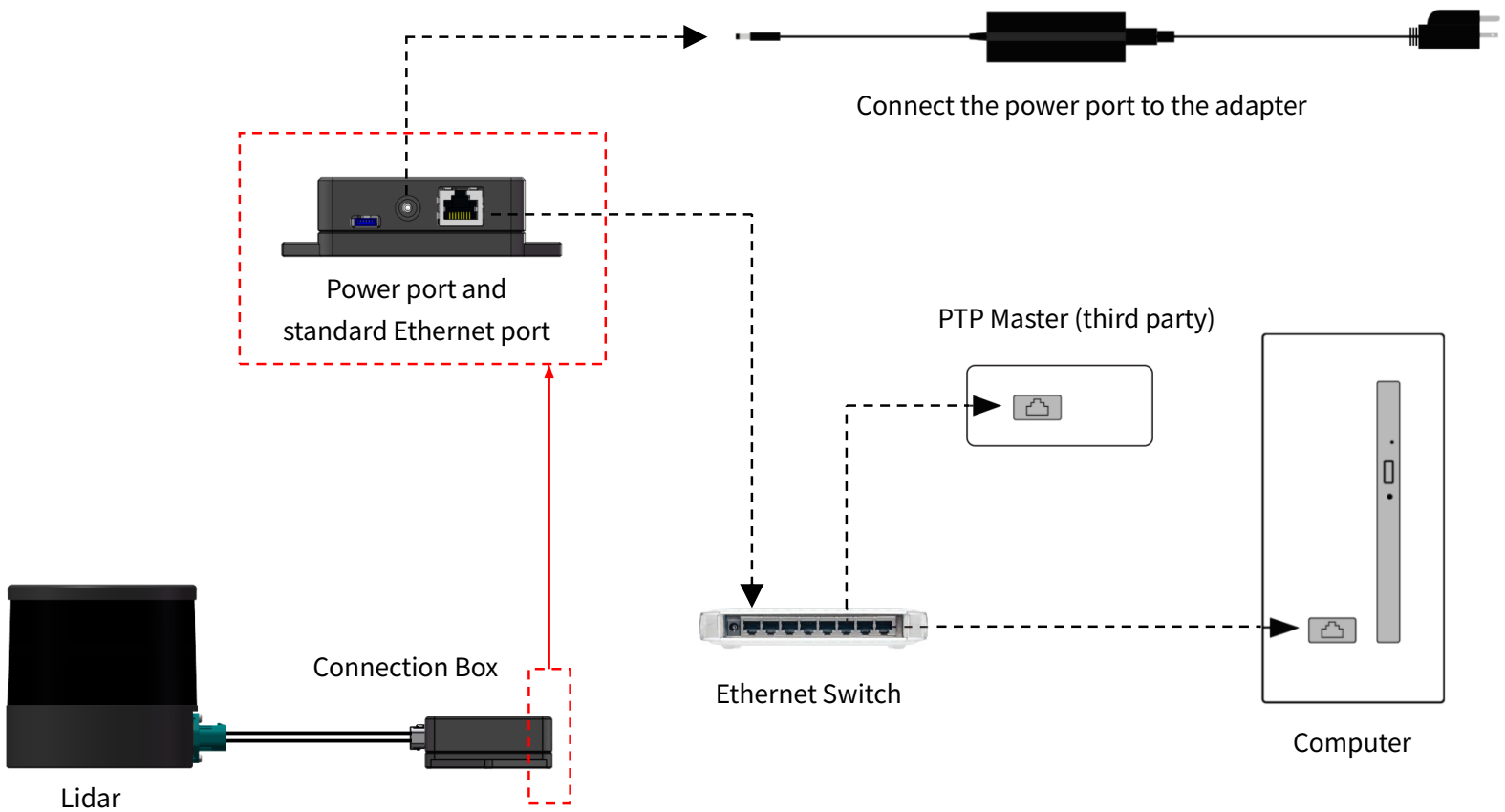

Figure 2.9 Connection with PTP (Hardware Device)

Hesai v. Ouster, IPR2023-01422
Ouster Ex. 2013 - Page 28 of 98

2.4 Get Ready to Use

Before operating the lidar, strip away the protective cover outside the cover lens.

The lidar does not have a power switch. It starts operating once connected to power and the Ethernet.

To receive data on your PC, set the PC's IP address to 192.168.1.100 and subnet mask to 255.255.255.0

For Ubuntu:	For Windows:
Input this ifconfig command in the terminal: ~$ sudo ifconfig enp0s20f0u2 192.168.1.100 (replace enp0s20f0u2 with the local Ethernet port name)	Open the Network Sharing Center, click on "Ethernet" In the "Ethernet Status" box, click on "Properties" Double-click on "Internet Protocol Version 4 (TCP/IPv4)" Configure the IP address to 192.168.1.100 and subnet mask to 255.255.255.0

To record and display point cloud data, see PandarView User Manual.

To set parameters, check device info, or upgrade firmware/software, see Chapter 4 (Web Control)

Hesai v. Ouster, IPR2023-01422
Ouster Ex. 2013 - Page 29 of 98

3 Data Structure

The lidar outputs Point Cloud Data Packets.
Unless otherwise specified, all the multi-byte fields are unsigned values in little endian format.

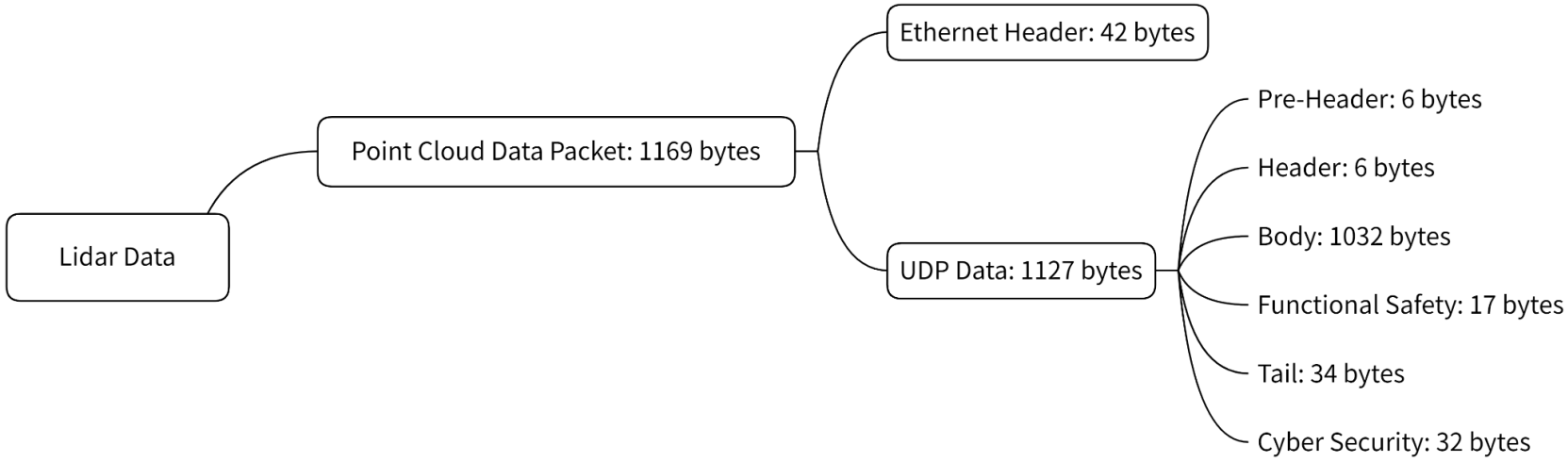

Figure 3.1 Data Structure

Hesai v. Ouster, IPR2023-01422
Ouster Ex. 2013 - Page 30 of 98

3.1 Point Cloud Data Packet

3.1.1 Ethernet Header

Each lidar has a unique MAC address. The source IP is 192.168.1.201 by default, and the destination IP is 255.255.255.255 (broadcast).

Point Cloud Ethernet Header: 42 bytes		
Field	Bytes	Description
Ethernet II MAC	12	Destination: broadcast (0xFF: 0xFF: 0xFF: 0xFF: 0xFF: 0xFF) Source: (xx:xx:xx:xx:xx:xx)
Ethernet Data Packet Type	2	0x08, 0x00
Internet Protocol	20	Shown in the figure below
UDP Port Number	4	UDP source port (0x2710, representing 10000) Destination port (0x0940, representing 2368)
UDP Length	2	8 bytes more than the size of the Point Cloud UDP Data
UDP Checksum	2	-

```
Internet Protocol Version 4, Src: 192.168.1.201, Dst: 255.255.255.255
  0100 .... = Version: 4
  .... 0101 = Header Length: 20 bytes (5)
  Differentiated Services Field: 0x00 (DSCP: CS0, ECN: Not-ECT)
  Total Length: 1155
  Identification: 0x7af1 (31473)
  Flags: 0x4000, Don't fragment
  ...0 0000 0000 0000 = Fragment offset: 0
  Time to live: 128
  Protocol: UDP (17)
  Header checksum: 0xf880 [validation disabled]
  [Header checksum status: Unverified]
  Source: 192.168.1.201
  Destination: 255.255.255.255
```

Figure 3.2 Point Cloud Ethernet Header - Internet Protocol

3.1.2 UDP Data

■ **Pre-Header: 6 bytes**

Field	Bytes	Description
0xEE	1	SOP (start of packet)
0xFF	1	SOP (start of packet)
Protocol Version Major	1	Main class of the point cloud UDP packet structure Currently 0x03
Protocol Version Minor	1	Subclass of the point cloud UDP packet structure Currently 0x02
Reserved	2	-

Hesai v. Ouster, IPR2023-01422
Ouster Ex. 2013 - Page 32 of 98

■ **Header: 6 bytes**

Field	Bytes	Description
Laser Num	1	0x80 (128 channels)
Block Num	1	0x02 (2 blocks per packet)
First Block Return	1	Reserved
Dis Unit	1	0x04 (4 mm)
Return Num	1	Number of returns that each channel generates 0x01 - one return 0x02 - two returns
Flags	1	[7] and [5:4] are reserved The other bits show whether this data packet contains the following information [6] channel customization 1 – Selected channels 0 – All channels (fixed) [3] digital signature 1 – YES 0 – NO [2] functional safety 1 – YES (fixed) 0 – NO [1] IMU 1 – YES 0 – NO (fixed) [0] UDP sequence 1 – YES (fixed) 0 – NO

Hesai v. Ouster, IPR2023-01422
Ouster Ex. 2013 - Page 33 of 98

■ **Body: 1032 bytes (2 blocks)**

Field	Bytes	Description
Azimuth 1	2	For Block 1: current reference angle of the rotor azimuth angle in degrees = Azimuth / 100
Block 1	512	For Block 1: measurements made by each channel, starting form Channel 1 See table below
Azimuth 2	2	For Block 2
Block 2	512	For Block 2
CRC 1	4	CRC-32/MPEG-2 checksum of the Body For more on the CRC-32/MPEG-2 computation algorithm, refer to: https://www.mathworks.com/matlabcentral/fileexchange/72226-crc-32-mpeg-2-computation-algorithm

Each Channel in the Block: 4 bytes Each Block in the Body: 4 * 128 = 512 bytes			
Field	Bytes	Description	
Channel X	4	2-byte Distance	See definition in the next page
		1-byte Reflectivity	Reflectivity Value = Reflectivity * 1% Range: 0 to 255
		1-byte Reserved	-

If a channel does not fire in the current firing sequence, its corresponding four bytes are filled with 0.

Hesai v. Ouster, IPR2023-01422
Ouster Ex. 2013 - Page 34 of 98

The Distance field is defined below:

Up-Close Blockage Detection = **OFF**	Description
Distance⩾12	Distance Value = Distance * Dis Unit ⩾ 0.048 m Dis Unit: See "Header" in this section
Distance = 0	No valid point cloud output

Up-Close Blockage Detection = **ON**	Description
Distance⩾12	Distance Value = Distance * Dis Unit ⩾ 0.048 m Dis Unit: See "Header" in this section
Distance = 0 (as flag)	No laser emission.
Distance = 1 (as flag)	Either no return signal is received, or return signal is received but rejected. Thus, no valid point cloud output. Common reasons for return signal rejection: • The signal is generated by another lidar unit. • Object distance exceeds the upper limit of the lidar's measurement range. • Pulse intensity is below the threshold. • The signal is filtered out. See Retro Multi-Reflection Filtering in Section 4.2 (Web Control: Settings)

Users can enable or disenable Up-Close Blockage Detection (see Section 4.2 Web Control - Settings).

Hesai v. Ouster, IPR2023-01422
Ouster Ex. 2013 - Page 35 of 98

Four single-return modes and five dual-return modes are available, indicated by the Return Mode field in the Tail of Point Cloud Data Packets.

In a single-return mode: the measurements from each round of firing are stored in **one block**.

In a dual-return mode:

- the measurements from each round of firing are stored in the **two blocks of one packet** (see table below);
- azimuth changes every packet;
- firing sequence changes every packet, indicated by the Mode Flag field in the Tail.

Return Mode field	Block 1	Block 2	Note
0x39	Last return	Strongest return	If the last return is also the strongest, then the even-number block stores the second strongest return.
0x3B	First return	Last return	If there is only one return, then the two blocks store the same data.
0x3C	First return	Strongest return	If the first return is also the strongest, then the even-number block stores the second strongest return.
0x3E	Strongest	Second Strongest	If there is only one return, then the two blocks store the same data.
0x3A	First	Second	If there is only one return, then the two blocks store the same data.

Hesai v. Ouster, IPR2023-01422
Ouster Ex. 2013 - Page 36 of 98

■ **Functional Safety: 17 bytes**

Field	Bytes	Description
FS Version	1	Version number of the functional safety module (currently 0x01)
Lidar State	1	[7:5] is the lidar's current state: d-0 (b-000) Initialization d-1 (b-001) Normal d-2 (b-010) Warning d-3 (b-011) Performance Degradation (not yet supported) d-4 (b-100) Shutdown or Output Untrusted
Fault Code Type		[4:3] is the type of the fault code in this data packet b-00: No current or past fault b-01: Current fault b-10: Past fault (not yet supported)
Rolling Counter (for Fault Messages)		[2:0] indicates whether the fault reporting system gets stuck Starting from 0, the rolling counter increments by 1 every 5 ms
Total Fault Code Num	1	[7:4] counts the total number of fault codes in this queue
Fault Code ID		[3:0] is the sequence number of the fault code in this queue, starting from 1
Fault Code	2	Fault code sent by this data packet
Reserved	8	-
CRC 2	4	CRC-32/MPEG-2 checksum of Functional Safety (from the Lidar State field to the Reserved field)

The lidar states and fault codes are described in the Safety Manual. Please contact Hesai technical support for more information.

Hesai v. Ouster, IPR2023-01422
Ouster Ex. 2013 - Page 37 of 98

■ **Tail: 34 bytes**

Field	Bytes	Description
Reserved	5	-
Mode Flag	1	[7:1] is reserved. [0] indicates the firing sequence used in Block 1: 1 – Firing Sequence 1 0 – Firing Sequence 2 In a single-return mode: [0] = 1 (fixed). Blocks 1 and 2 use Firing Sequences 1 and 2, respectively. In a dual-return mode: When [0] = 1, Blocks 1 and 2 use Firing Sequence 1, and for the next packet [0] = 0. When [0] = 0, Blocks 1 and 2 use Firing Sequence 2, and for the next packet [0] = 1. Firing sequences are defined in Appendix II (Firing Time Offset of Each Channel).
Reserved	6	-
Return Mode	1	0x33 – First Return 0x34 – Second Return 0x37 – Strongest Return 0x38 – Last Return 0x39 – Dual Return (Last, Strongest) 0x3B – Dual Return (First, Last) 0x3C – Dual Return (First, Strongest) 0x3E – Dual Return (Strongest, Second Strongest) 0x3A – Dual Return (First, Second)
Motor Speed	2	Unit: RPM

<table>
<tr><th>Field</th><th>Bytes</th><th>Description</th></tr>
<tr><td>Date & Time</td><td>6</td><td>The absolute UTC time of this data packet, accurate to the second.

<table><tr><th>Each Byte</th><th>Range</th></tr><tr><td>Year (current year minus 1900)</td><td>⩾70</td></tr><tr><td>Month</td><td>1 to 12</td></tr><tr><td>Day</td><td>1 to 31</td></tr><tr><td>Hour</td><td>0 to 23</td></tr><tr><td>Minute</td><td>0 to 59</td></tr><tr><td>Second</td><td>0 to 59</td></tr></table></td></tr>
<tr><td>Timestamp</td><td>4</td><td>The "μs time" part of the absolute time of this data packet (defined in Appendix II)
Unit: μs
Range: 0 to 1000000 μs (1 s)</td></tr>
<tr><td>Factory Information</td><td>1</td><td>0x42</td></tr>
<tr><td>UDP Sequence</td><td>4</td><td>Sequence number of this UDP packet
0 to 0xFF FF FF FF</td></tr>
<tr><td>CRC 3</td><td>4</td><td>CRC-32 checksum of the Tail</td></tr>
</table>

Hesai v. Ouster, IPR2023-01422
Ouster Ex. 2013 - Page 39 of 98

■ **Cyber Security: 32 bytes**

Field	Bytes	Description
Signature	32	Point cloud signature Calculated using Point Cloud UDP Data (from Pre-Header to Tail, appended with UDP Sequence) Algorithm: HMAC-SHA256 (256 bits) This field is all zeros by default. After users specify a Shared Secret Key and start a session, this field will output point cloud signature. Refer to Section 4.8.3 (Web Control - Security - Point Cloud Signature).

Hesai v. Ouster, IPR2023-01422
Ouster Ex. 2013 - Page 40 of 98

3.1.3 Point Cloud Data Analysis

Take Channel 5 in Block 2 as an example:

■ **Analyze the vertical angle of a data point**

The designed vertical angle of Channel 5 is -46.695°, according to Appendix I (Channel Distribution)

Notes

- The accurate vertical angle is recorded in this lidar's unit's angle correction file, see Section 1.3 (Channel Distribution).
- 0° is the horizontal direction; define upward as positive (see Figure 1.5).
- Channel # counts from 1, bottom to top.

■ **Analyze the horizontal angle of a data point**

Y-axis is the 0° position; define clockwise in the top view as positive (see Figure 1.4).

Horizontal angle = ① + ②

① Angular position of current block (see Appendix II for definition)

② Firing time angular offset of the current firing channel

Hesai v. Ouster, IPR2023-01422
Ouster Ex. 2013 - Page 41 of 98

① = ③ + ④

③ Rotor reference angle during the current round of firing
In the Azimuth field of Block 2.

④ Horizontal angle offset of the current firing channel
The designed offset for Channel 5 is 8.833°, according to Appendix I (Channel Distribution Table).
The accurate horizontal angle offset is recorded in this lidar's unit's angle correction file, see Section 1.3 (Channel Distribution).

② = ⑤ * ⑥

⑤ Firing time offset of the current firing channel
Look up the table in Appendix II (Absolute Time of Point Cloud Data).

⑥ Spin rate of the motor
See Section 4.1 (Web Control – Home).

■ Analyze the distance of a data point

Actual distance in real world millimeters = distance measurement * Distance Unit

- Distance measurement: Distance field of Channel 5 in Block 2
- Dis Unit field in the Header: 4 mm

Hesai v. Ouster, IPR2023-01422
Ouster Ex. 2013 - Page 42 of 98

■ **Draw the data point in a polar or rectangular coordinate system**

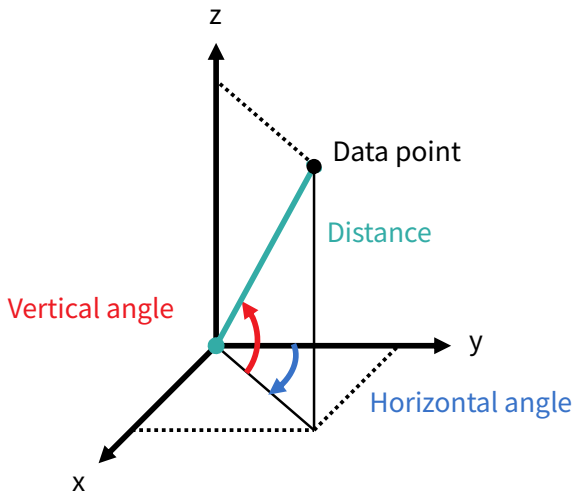

■ **Obtain the real-time point cloud data by analyzing and drawing every data point in each frame**

4 Web Control

Web control is used for setting parameters, checking device info, and upgrading.

To access web control

1) Connect the lidar to your PC using an Ethernet cable
2) Set the IP address according to Section 2.4 (Get Ready to Use)
3) Enter this URL into your web browser: 192.168.1.201

Google Chrome and Mozilla Firefox are recommended.

Hesai v. Ouster, IPR2023-01422
Ouster Ex. 2013 - Page 44 of 98

4.1 Home

Status

Spin Rate	600 rpm
PTP	Free Run

Device Info

Model	QT128C2X
P/N	QT128C2X-E01
S/N	QTXXXXXXXXXXXXXX
MAC Address	XX:XX:XX:XX:XX:XX
Software Version	3.1.40
Sensor Firmware Version	3.1.36
Controller Firmware Version	3.1.66

Hesai v. Ouster, IPR2023-01422
Ouster Ex. 2013 - Page 45 of 98

<table>
<tr><th>Parameter</th><th>Description</th></tr>
<tr><td>Spin Rate</td><td>Spin Rate of the motor (rpm) = frame rate (Hz) * 60</td></tr>
<tr><td>PTP</td><td>PTP status
<table>
<tr><td>Free Run</td><td>No PTP master is selected.</td></tr>
<tr><td>Tracking</td><td>Attempting to sync with the selected PTP Master, but the absolute offset exceeds the user-specified limit in Section 4.2 (Settings).</td></tr>
<tr><td>Locked</td><td>Absolute offset is within the user-specified limit.</td></tr>
<tr><td>Frozen (Holdover)</td><td>Attempting to recover the connection to the PTP master.</td></tr>
</table></td></tr>
</table>

Hesai v. Ouster, IPR2023-01422
Ouster Ex. 2013 - Page 46 of 98

4.2 Settings

Reset All Settings

Control IP

IPv4 Address	192.168.1.201
IPv4 Mask	255.255.255.0
IPv4 Gateway	192.168.1.1

Settings

Destination IP	255.255.255.255
Lidar Destination Port	2368
Spin Rate	600 rpm
Return Mode	First and Last Return
Sync Angle ☐	0
Trigger Method	Time Based

(Continued on the next page)

Hesai v. Ouster, IPR2023-01422
Ouster Ex. 2013 - Page 47 of 98

(Continued)

Clock Source	**PTP**
Profile	1588v2
PTP Network Transport	UDP / IP
PTP Domain Number [0-127]	0
PTP logAnnounceInterval	1
PTP logSyncInterval	1
PTP logMinDelayReqInterval	0
Time Offset for Lidar Lock (1-100 µs)	1
Up-Close Blockage Detection	OFF
Retro Multi-Reflection Filtering	OFF
Rotation Direction	Clockwise
Standby Mode	In Operation / Standby

Save

Button	Description
Reset All Settings	Reset all the configurable parameters to factory defaults, including: • Section 4.2 (Settings) • Section 4.3 (Azimuth FOV)
Save	Save and execute all the settings on this page. • Exception: Standby Mode takes effect immediately without having to click "Save".

Hesai v. Ouster, IPR2023-01422
Ouster Ex. 2013 - Page 48 of 98

4.2.1 Network Settings

Parameter	Options	Description
Destination IP	Any address except for 0.0.0.0, 127.0.0.1, and the lidar's IP. Default: 255.255.255.255	<table><tr><th>Mode</th><th>Destination IP</th></tr><tr><td>Broadcast (default)</td><td>255.255.255.255</td></tr><tr><td>Multicast</td><td>User-defined</td></tr><tr><td>Unicast</td><td>Same as the PC's IP address</td></tr></table>

4.2.2 Function Settings

Parameter	Options	Description
Spin Rate	600 RPM (default) 1200 RPM	The set spin rate is also shown on web control (see Section 4.1 Web Control – Home).
Return Mode	Single Return • First / Strongest / Last / Second Return Dual Return • First and Last Return (default) • Last and Strongest Return • First and Strongest Return • Strongest and Second Strongest Return • First and Second Return	Also shown in Point Cloud Data Packets (see the Return Mode field in Section 3.1.2 Point Cloud UDP Data).

Hesai v. Ouster, IPR2023-01422
Ouster Ex. 2013 - Page 49 of 98

<table>
<tr><th>Parameter</th><th>Options</th><th>Description</th></tr>
<tr><td>Sync Angle</td><td>0° to 360°</td><td>Phase lock angle
• To activate this function, check the checkbox and input an azimuth.
• At every full second, the lidar will rotate to that azimuthal position (see Section 1.2 Lidar Structure).

Definition of full second
• When PTP is tracking or locked: retrieved from the PTP master clock
• Otherwise: the rising edge of the lidar's internal 1 Hz signal
• Detailed in Appendix II (Absolute Time of Point Cloud Data)

To phase-lock multiple lidars
Connect the lidars to the same clock source and set the same sync angle, and these lidars will rotate to that same azimuthal position at every full second.</td></tr>
<tr><td>Trigger Method</td><td>Angle-Based
Time-Based (default)</td><td>The way laser firings are triggered.

<table><tr><td>Time-based</td><td>lasers fire every 111.11 us.</td></tr><tr><td>Angle-based</td><td>lasers fire every 0.4° at 10 Hz, or every 0.8° at 20 Hz</td></tr></table></td></tr>
<tr><td>Up-Close Blockage Detection</td><td>OFF (default)
ON</td><td>When no point cloud is output, the following two circumstances can be distinguished:
• No laser emission.
• With laser emission, no point cloud data is valid.
See definition of the Distance field in Section 3.1.2 (Point Cloud UDP Data).</td></tr>
</table>

Hesai v. Ouster, IPR2023-01422
Ouster Ex. 2013 - Page 50 of 98

Parameter	Options	Description
Retro Multi-Reflection Filtering	OFF (default) ON	To mitigate the false positives at twice the distance of a retroflector.
Rotation Direction	Clockwise (default) Counterclockwise	After selecting Counterclockwise, refresh the webpage to check that the settings have taken effect. If the page after refreshing still shows Clockwise, refresh the page again and check.
Standby Mode	In Operation (default) Standby	In Standby mode, the motor stops running and lasers stop firing.

Hesai v. Ouster, IPR2023-01422
Ouster Ex. 2013 - Page 51 of 98

4.2.3 Time Settings

Clock Source	**PTP**
Profile	1588v2
PTP Network Transport	UDP/IP
PTP Domain Number	0
PTP logAnnounceInterval	1
PTP logSyncInterval	1
PTP logMinDelayReqInterval	0
Time Offset for Lidar Lock	1

Parameter	Options	Description
Clock Source	PTP	Detailed in Appendix III (PTP Protocol)
Profile	1588v2 (default) 802.1AS 802.1AS Automotive	IEEE timing and synchronization standard
Time Offset for Lidar Lock	1 to 100 µs (integer)	Specify the upper limit of the absolute offset between Slave and Master when the lidar is in PTP Locked status; see Section 4.1 (Home)
PTP Network Transport	UDP/IP (default) L2	Network transport protocol UDP/IP: Available only for 1588v2 profile L2: Available for all profiles

Hesai v. Ouster, IPR2023-01422
Ouster Ex. 2013 - Page 52 of 98

Parameter	Options	Description
Domain Number	0 to 127 (integer) Default: 0	Domain attribute of the local clock

When using the 1588v2 profile:

Parameter	Options	Description
PTP logAnnounceInterval	-2 to 3 Default: 1	Time interval between Announce messages Default: 1 log second (2 seconds)
PTP logSyncInterval	-7 to 3 Default: 1	Time interval between Sync messages Default: 1 log second (2 seconds)
PTP logMinDelayReqInterval	-7 to 3 Default: 0	Minimum permitted mean time between Delay_Req messages Default: 0 log second (1 second)

When using the 802.1AS or 802.1AS Automotive profile:

Parameter	Options	Description
Switch Type	TSN (default) Non-TSN	Type of the network switch TSN: Time Sensitive Network, using Peer-to-Peer delay mechanism Non-TSN: Using End-to-End delay mechanism

Hesai v. Ouster, IPR2023-01422
Ouster Ex. 2013 - Page 53 of 98

4.3 Azimuth FOV

Button	Description
Save	Save and execute all the settings on this page.

Parameter	Options	Description
Azimuth FOV Setting	For all channels (default) Multi-section FOV	Configuration mode of the azimuth FOV. The lidar outputs valid data only within the specified azimuth FOV ranges.

Note

- The angles in degrees are accurate to the first decimal place.
- If the Start Angle is larger than the End Angle, then the actual range is the union of [Start Angle, 360°) and [0°, End Angle).
  - For instance, when the angle range is set to be [270°, 90°), the actual azimuth FOV is [270°, 360°)∪[0°, 90°).

Hesai v. Ouster, IPR2023-01422
Ouster Ex. 2013 - Page 54 of 98

4.3.1 For all channels

Input a Start Angle and an End Angle to form a continuous angle range.
This range applies to all channels.

4.3.2 Multi-section FOV

For each of the eight channel groups (16 channels per group, starting from Channel 1), input multiple (≤2) sets of Start Angles and End Angles to form multiple continuous angle ranges.

Azimuth FOV Setting Multi-section FOV

Enable/Disable All

Status	Group Channel	Azimuth FOV 1		Azimuth FOV 2	
		Start Angle	End Angle	Start Angle	End Angle
	1~16	0.0	0.0	0.0	0.0
	17~32	0.0	0.0	0.0	0.0
	33~48	0.0	0.0	0.0	0.0
	49~64	0.0	0.0	0.0	0.0
	65~80	0.0	0.0	0.0	0.0
	81~96	0.0	0.0	0.0	0.0
	97~112	0.0	0.0	0.0	0.0
	113~128	0.0	0.0	0.0	0.0

Save

4.4 Operation Statistics

These operating parameters are shown in real time:

Start-Up Counts	146
Internal Temperature	56.26°C
System Uptime	0 h 5 min
Total Operation Time	559 h 43 min

Internal Temperature	**Operation Time**
< -40 °C	0 h 1 min
-40 to -20 °C	0 h 46 min
...	...
100 to 120 °C	1 h 44 min
>120 °C	0 h 0 min

Hesai v. Ouster, IPR2023-01422
Ouster Ex. 2013 - Page 57 of 98

4.5 Monitor

These electrical parameters (measured at the lidar's connector) are shown in real time:

- Lidar Input Current
- Lidar Input Voltage
- Lidar Input Power

Hesai v. Ouster, IPR2023-01422
Ouster Ex. 2013 - Page 58 of 98

4.6 Upgrade

Preparation

- Please contact Hesai technical support to receive encrypted and signed upgrade files.
- During the upgrade, it is recommended to place a protective cover (supplied with the lidar) or other opaque material over the lidar's cover lens.

Upgrade

- Click the "Upload" button, select an upgrade file, and confirm your choice in the pop-up window.
- When the upgrade is complete, the lidar will automatically reboot, and the past versions will be logged in the Upgrade Log.

Button	Description
Restart	Software reboot Afterwards, the Start-Up Counts in the Operation Statistics page increments by 1.

Parameter	Current Value
Software Version	3.1.40
Firmware of Sensor Version	3.1.36
Firmware of Controller Version	3.1.66
Upgrade Log	-

Above version numbers may be different from the actual. Please refer to the web page of the lidar used.

Hesai v. Ouster, IPR2023-01422
Ouster Ex. 2013 - Page 59 of 98

4.7 Log

The process logs in this page can be used for software troubleshooting.

Button	Description
Clear ALL	Clear all logs
Download ALL	Download all logs

4.8 Security

Cyber Security (Master Switch)	OFF

Login Control	
Authentication	OFF

Secure Connection	
PTC Connection	Non-TLS
HTTP Connection	HTTP

Point Cloud Signature
Share Secret Key ⓘ

Save

Cyber Security (Master Switch)	ON

Login Control	
Authentication	ON
Current Password	Current Password Forgot Password?
New Password	New Password
Confirm New Password	Confirm New Password

Secure Connection	
PTC Connection	TLS
HTTP Connection	HTTPS

Point Cloud Signature
Share Secret Key ⓘ

Save

As shown in the previous page, the available settings depend on the Cyber Security Master Switch:

	Cyber Security (Master Switch): OFF (Default)	Cyber Security (Master Switch): ON
Login Control	OFF http://192.168.1.201 redirects to the Home page.	ON https://192.168.1.201 redirects to the Login page (see Section 4.9 Login).
Secure Connection	OFF PTC and HTTP (cleartext communication)	ON PTCS and HTTPS (encrypted communication; configuration required)
Point Cloud Signature	Setting the Shared Secret Key in cleartext poses data breach risks and is not recommended.	Users can change the shared secret key.

Notes

- Point cloud signature is deactivated by default. Its activation/deactivation is controlled by PTC commands (see Section 5 Communication Protocol), regardless of the Cyber Security Master Switch. This webpage only sets the Shared Secret Key of point cloud signature.
- Firmware and software upgrades are always encrypted and signed, regardless of the Cyber Security Master Switch.

Hesai v. Ouster, IPR2023-01422
Ouster Ex. 2013 - Page 62 of 98

4.8.1 Login Control

When the Cyber Security Master Switch is ON:

Parameter	Description
Authentication	Login control. Forced to be ON.
Current Password	When turning on/off the Cyber Security Master Switch or when changing the password, input here. • Default password: **123456** • To effectively implement login control, please change the default password and keep your new password securely. • Before returning a trial/loaner lidar or an RMA lidar to Hesai, please make sure to change the password back to default.
New Password	Format • 8 to 30 characters • Containing at least one digit and one letter (case sensitive) • Special characters are allowed
Confirm New Password	-

In case the password is forgotten:

If **TLS** is selected for PTC Connection	Users can only **reset the password**: • Click on "Forgot password?" and it redirects to the Reset Password page; obtain a reset code. • Contact Hesai technical support, provide the reset code to obtain a verification code. • Input the verification code in Reset Password page and click on "Submit".
If **mTLS** is selected for PTC Connection	Users are allowed to **change the password** (without providing the current password) by sending a PTCS command. See Section 5 (Communication Protocol).

Hesai v. Ouster, IPR2023-01422
Ouster Ex. 2013 - Page 63 of 98

4.8.2 Secure Connection

When the Cyber Security Master Switch is ON:

TLS:

Secure Connection	
PTC Connection	TLS
HTTP Connection	HTTPS

mTLS:

Secure Connection		
PTC Connection	mTLS	
Client CA certificate name	*No file*	
Certificate status	*Invalid*	
Change Certificate	Upload	Remove
HTTP Connection	HTTPS	

Parameter	Options	Description
PTC Connection	TLS (default) mTLS	PTC connection mode TLS (one-way auth): Only the user authenticates the lidar. mTLS (two-way auth): The user and the lidar authenticate each other. Recommended for enhanced security. • Click the "Upload" button to upload a user CA certificate chain. • Before returning a trial/loaner lidar or an RMA lidar to Hesai, click "Remove" to remove the uploaded certificate.
HTTP Connection	Forced to be HTTPS	HTTP connection mode After configuring the HTTPS environment (see Section 4.8.4): • The current URL switches from **http**://192.168.1.201 to **https**://192.168.1.201. • Communication becomes encrypted.

4.8.3 Point Cloud Signature

Parameter	Options	Description
Shared Secret Key	8 to 32 digits or letters (case sensitive)	Used for negotiating a session key. • Default key: **12345678** • To avoid data breach risks, please change the default key and keep your new key securely.

Hesai v. Ouster, IPR2023-01422
Ouster Ex. 2013 - Page 65 of 98

4.8.4 Configure HTTPS Environment

Before using HTTPS, import the lidar CA certificate chain into your browser.

Without this step, HTTPS will not be activated, and a browser warning ("Not Secure") will appear when accessing web control.

Chrome and Firefox in Windows 10 are used as an example.

Hesai v. Ouster, IPR2023-01422
Ouster Ex. 2013 - Page 66 of 98

1) Go to the Settings/Options/Preference page of your browser → Input "Certificate" in the search bar → Select "Manage/View Certificates"

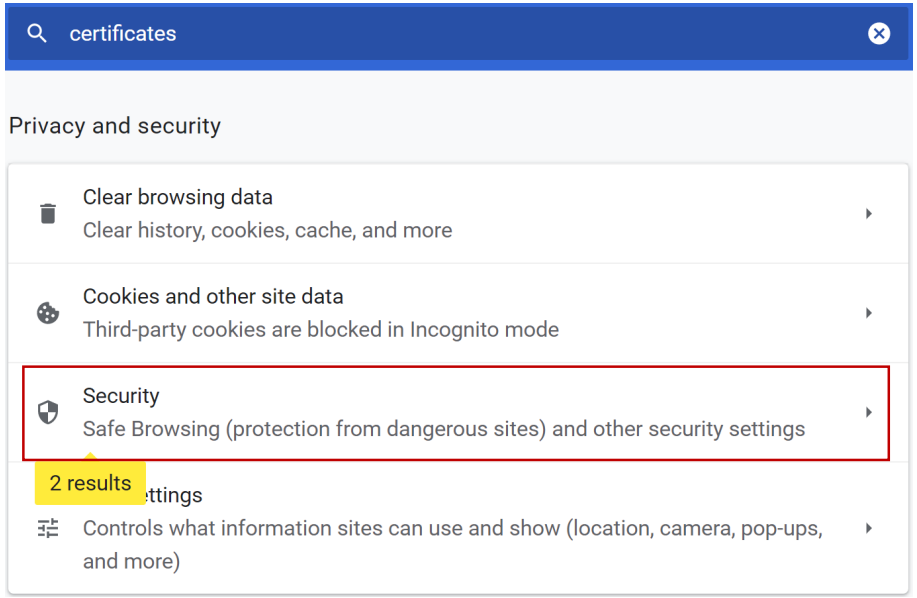

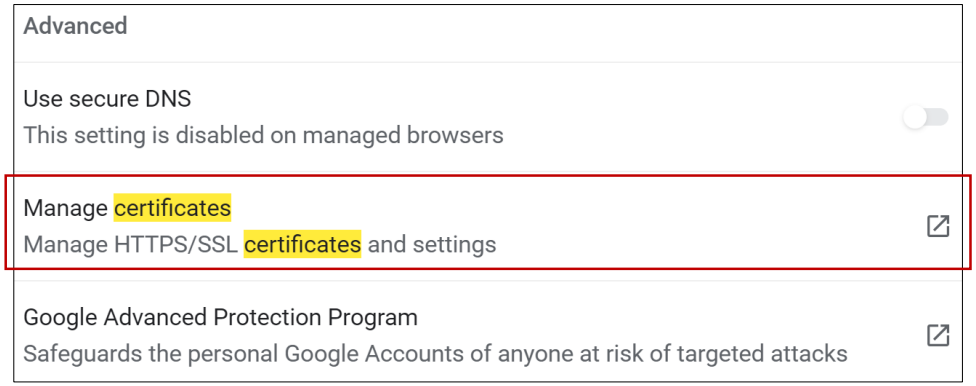

2) In the pop-up dialog box

- If "Intermediate Certification Authorities" and "Trusted Root Certification Authorities" are two separate tabs (see left-hand screenshot), click "Import" to upload the intermediate certificate under the former tab, and upload the root certificate under the latter tab
- If only one tab is named "Authorities" (see right-hand screenshot), click "Import" to upload the intermediate and root certificates under this tab, or upload only the certificate chain file under this tab.

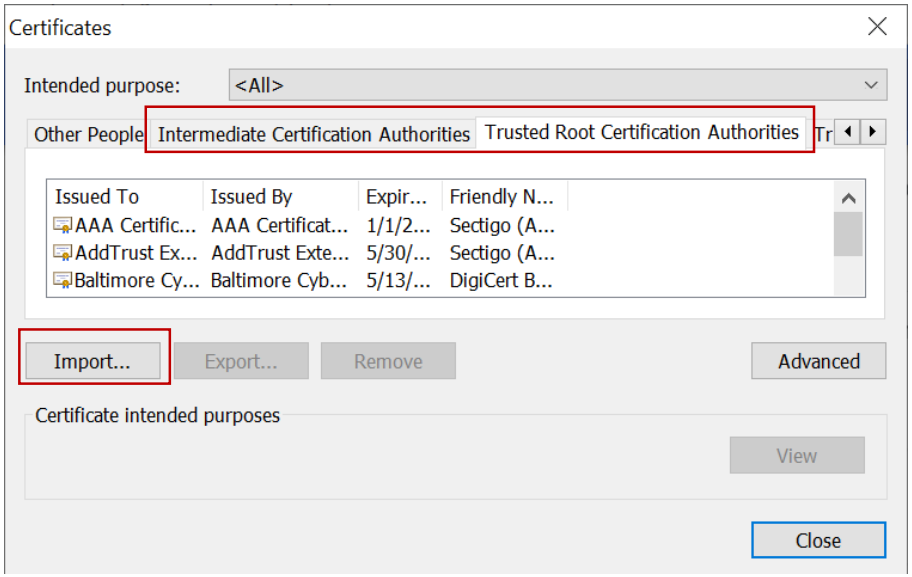

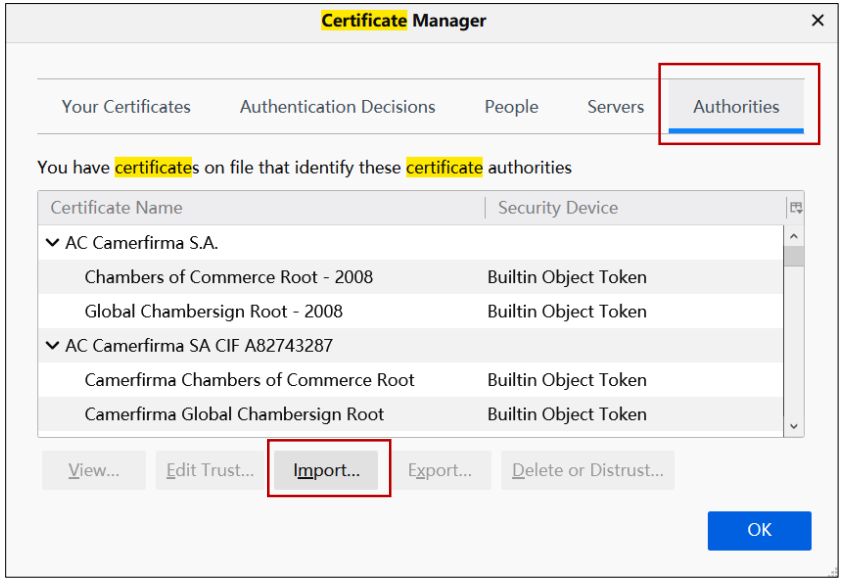

Follow the default settings in the Import Certificate wizard and click "Next" if applicable.

In case the following warnings appear, select "Trust this CA to identify websites".

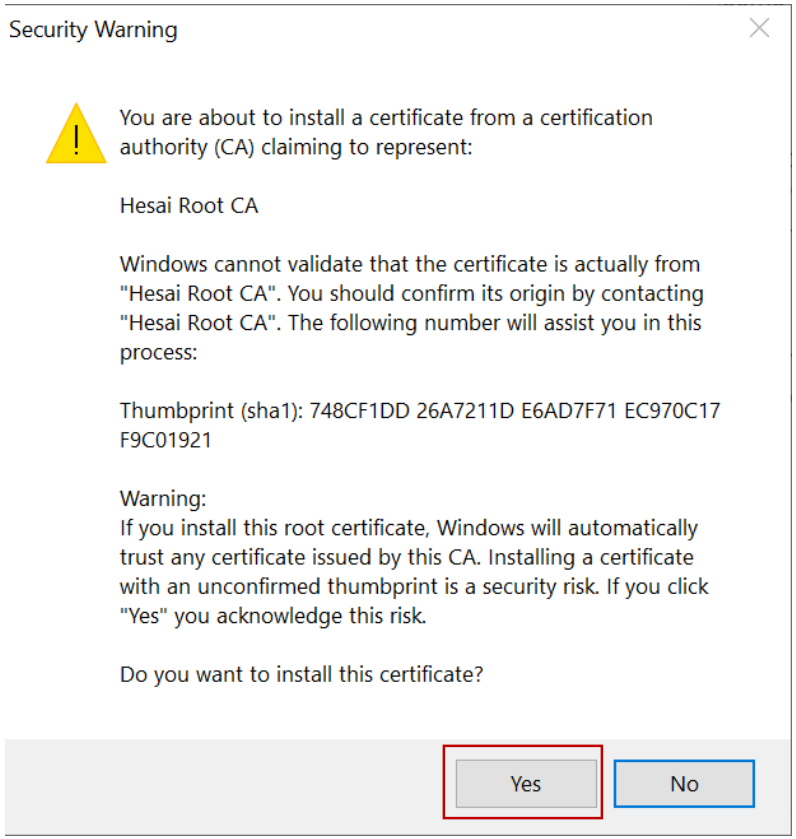

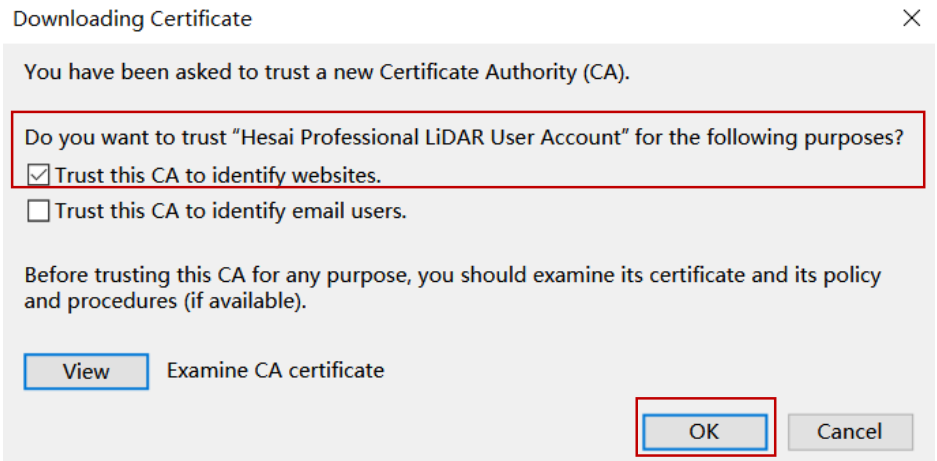

3) When the import is complete, the CA certificate appears in the dialog box. Double-click to see detailed information.

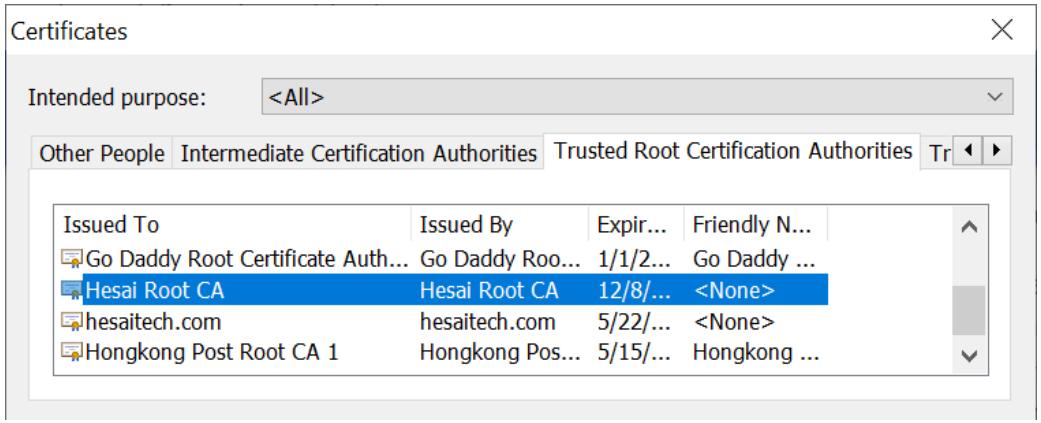

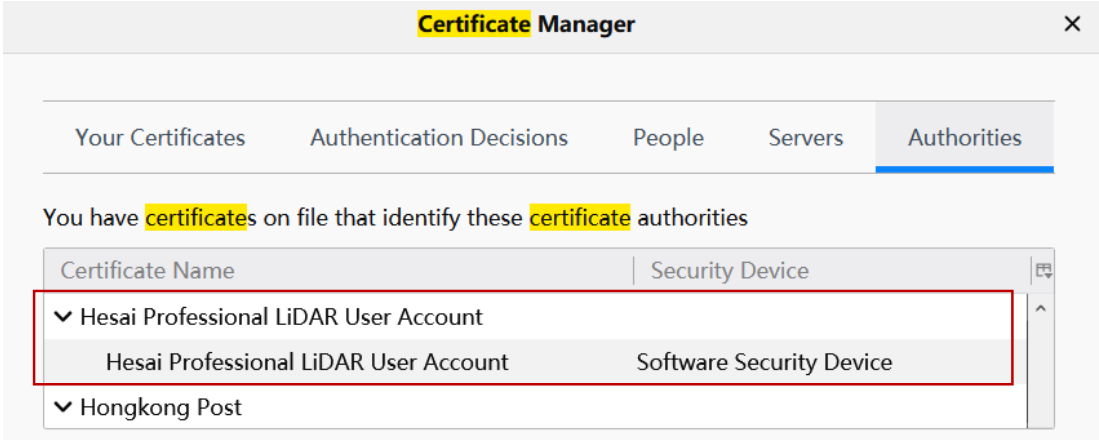

4.9 Login

When the Cyber Security Master Switch on the Security page is ON (see Section 4.8 Security), login control will be activated and the current URL will redirect to the Login page.

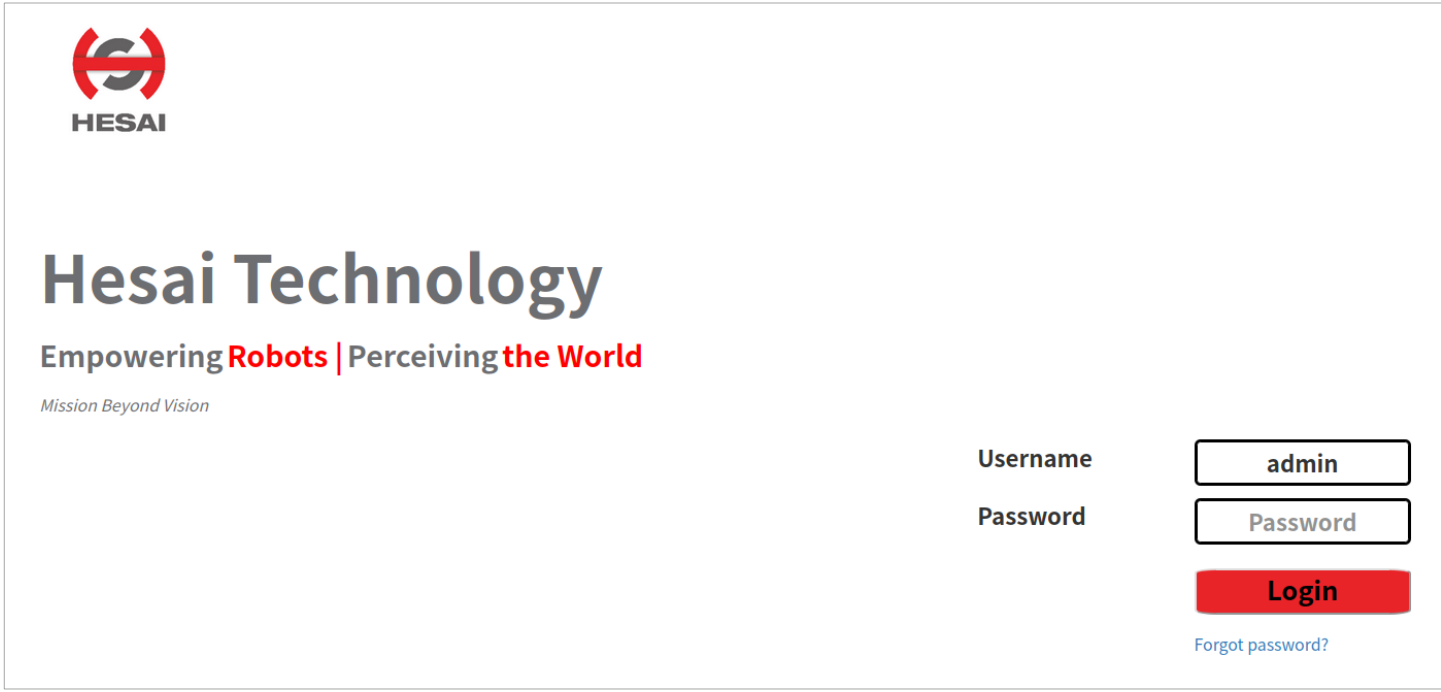

Username	admin
Password	Default: **123456** To effectively implement login control, please change the default password (see Section 4.8 - Security) and keep your new password securely.

5 Communication Protocol

To acquire Hesai lidar's PTC (Pandar TCP Commands) and HTTP API Reference Manual, please contact Hesai technical support.

Lidar models that support cybersecurity can communicate using the encrypted PTCS (PTC over TLS) and HTTPS (HTTP over TLS) API.

- Data format is the same with the cleartext PTC/HTTP API.
- To use PTCS, make sure your TLS version is 1.3 or above, with OpenSSL 1.1.1 or above.

The sample code for using PTC/PTCS, HTTP/HTTPS, and point cloud signature can be found at:
https://github.com/HesaiTechnology/Cyber_Security

Hesai v. Ouster, IPR2023-01422
Ouster Ex. 2013 - Page 72 of 98

6 Sensor Maintenance

■ Cleaning

Stains on the product's cover lens, such as dirt, fingerprints, and oil, can negatively affect point cloud data quality.
Please perform the following steps to remove the stains.

Warnings

- Turn OFF the power source before cleaning.
- To avoid damaging the optical coating, do NOT apply pressure when wiping the cover lens.

Notes

- Only clean the stained area of the cover lens.
- Check before using a lint-free wipe. If the wipe is stained, use another.

1) Thoroughly wash your hands or wear a pair of powder-free PVC gloves.
2) To remove dust, blow dry air onto the cover lens, or use a piece of lint-free wipe to lightly brush across the dusty area.

To remove persistent stains, move on to the next step.

3) Spray the cover lens with warm, neutral solvent using a spray bottle.

Solvent type	Soft sponge with a mild soap solution Mild soap solution: maximum two tablespoons of neutral soap in 1 quart (1 liter) of water.
Solvent temperature	20 to 25°C

(Continued on the next page)

Hesai v. Ouster, IPR2023-01422
Ouster Ex. 2013 - Page 73 of 98

(Continued)

4) When the stains have loosened, dip a piece of lint-free wipe into the solvent made in Step 3, and gently wipe the cover lens back and forth along its surface.

5) Should another cleaning agent be applied to remove certain stains, repeat Steps 3 and 4.

6) Spray the cover lens with clean water, and gently wipe off the remaining liquid with another piece of lint-free wipe.

Hesai v. Ouster, IPR2023-01422
Ouster Ex. 2013 - Page 74 of 98

7 Troubleshooting

In case the following procedures cannot solve the problem, please contact Hesai technical support.

Symptoms	Points to Check
Indicator light is off on the connection box	Verify that: • power adapter is properly connected and in good condition; • connection box is intact; • input voltage and current satisfy the requirements in Section 2.3 (Connection Box). Power on again to check if the symptom persists.
Motor is not running	Verify that: • power adapter is properly connected and in good condition; • if a connection box is used, the connection box is intact; • input voltage and current satisfy the requirements in Section 1.4 (Specifications) and 2.3 (Connection Box); • web control can be accessed (see "cannot open web control" on the next page); • the lidar is not in standby mode (see Section 4.2 Web Control – Settings). Power on again to check if the symptom persists.

Hesai v. Ouster, IPR2023-01422
Ouster Ex. 2013 - Page 75 of 98

Symptoms	Points to Check
Motor is running but no output data is received, neither on Wireshark nor on PandarView	Verify that: • Ethernet cable is properly connected (by unplugging and plugging again); • Lidar's Destination IP is correctly set on the Settings page of web control; • horizontal FOV is properly set on the Azimuth FOV page of web control; • firmware version of the sensor is correctly shown on the Upgrade page of web control; • Lidar is emitting laser light. This can be checked by using an infrared camera, an infrared sensor card, or a phone camera without infrared filter. If a connection box is used: • replace the current Ethernet cable with another cable of at least Cat 6; Cat 7 or higher is recommended. Power on again to check if the symptom persists.
Can receive data on Wireshark but not on PandarView	Verify that: • Lidar Destination Port is correctly set on the Settings page of web control; • PC's firewall is disabled, or that PandarView 2 is added to the firewall exceptions; • PC's VLAN ID is the same as the lidar's; (**NOTE** This requirement applies only when the product model supports VLAN and that VLAN tagging is enabled.) • the latest version of PandarView 2 is installed on the PC. Power on again to check if the symptom persists.

Hesai v. Ouster, IPR2023-01422
Ouster Ex. 2013 - Page 76 of 98

Symptoms	Points to Check
Cannot open web control	Verify that: • Ethernet cable is properly connected (by unplugging and plugging again); • Lidar's IP is in the same subnet with the PC's. Users may use WireShark to check the lidar's IP that broadcasts data packets; • PC's VLAN ID is the same as the lidar's. (**NOTE** This requirement applies only when the product model supports VLAN and that VLAN tagging is enabled.) Afterwards: • restart PC, or connect the lidar to another PC; • power on again to check if the symptom persists.
Abnormal packet size (missing packets)	Verify that: • horizontal FOV is properly set on the Azimuth FOV page of web control; • motor's spin rate is steady on the Home page of web control; • Lidar's internal temperature is between -40°C and 110°C on the Operation Statistics page of web control • Ethernet is not overloaded; • no switch is connected into the network. The data transmitted from other devices may cause network congestion and packet loss. Afterwards: • connect the PC only to the lidar and check for packet loss; • power on again to check if the symptom persists.

Hesai v. Ouster, IPR2023-01422
Ouster Ex. 2013 - Page 77 of 98

Symptoms	Points to Check
Abnormal point cloud (obviously misaligned points, flashing points, or incomplete FOV)	Verify that: • Lidar's cover lens is clean. If not, refer to Section 6 (Sensor Maintenance) for the cleaning method; • Lidar's calibration file is imported; see *PandarView 2 User Manual* (Use); • horizontal FOV is properly set on the Azimuth FOV page of web control; • motor's spin rate is steady on the Home page of web control; • Lidar's internal temperature is between -40°C and 110°C on the Operation Statistics page of web control. Afterwards, check for packet loss: • If no packet is missing and yet the point cloud flashes, please update PandarView 2 to the latest version (see the Download page of Hesai's official website or contact Hesai technical support) and restart the PC. If the point cloud is still abnormal: • try connecting the lidar to another PC; • power on again to check if the symptom persists.

Hesai v. Ouster, IPR2023-01422
Ouster Ex. 2013 - Page 78 of 98

Appendix I Channel Distribution

Notes to the table next page:

■ Angle Values

- The design values of Horizontal Angle (Azimuth) Offsets and Vertical Angles (Elevation) are listed.
- The accurate values are in this lidar unit's angle correction file, see Section 1.3 (Channel Distribution).

■ Channel No.

- All channels are listed in the ascending order of Channel No..
- In the vertical high-resolution region (19° to 36°), the vertical angles of Channels 78 to 96 alternate with those of Channels 97 to 115. Outside this region, Channel No. counts from bottom to top.

■ Division of Channels into Banks

All channels are divided into four banks.

Range of Channels	Name
Channels 97 to 128	Bank D
Channels 65 to 96	Bank C
Channels 33 to 64	Bank B
Channels 1 to 32	Bank A

Hesai v. Ouster, IPR2023-01422
Ouster Ex. 2013 - Page 79 of 98

Channel Distribution

(to be continued)

Channel No.	Bank No.	Horizontal Angle (Azimuth) Offset	Vertical Angle (Elevation)	Range Capability @10% Reflectivity	Horizontal Resolution @10 Hz
1 (bottom)	Bank A	10.108°	-52.627°	15 m	0.8°
2	Bank A	9.720°	-51.028°	15 m	0.8°
3	Bank A	9.384°	-49.515°	15 m	0.8°
4	Bank A	9.091°	-48.074°	15 m	0.8°
5	Bank A	8.833°	-46.695°	15 m	0.8°
6	Bank A	8.603°	-45.369°	15 m	0.8°
7	Bank A	8.396°	-44.090°	15 m	0.8°
8	Bank A	8.209°	-42.852°	15 m	0.8°
9	Bank A	8.040°	-41.651°	20 m	0.8°
10	Bank A	7.885°	-40.482°	20 m	0.8°
11	Bank A	7.743°	-39.343°	20 m	0.8°
12	Bank A	7.612°	-38.231°	20 m	0.8°
13	Bank A	7.492°	-37.143°	20 m	0.8°
14	Bank A	7.380°	-36.076°	20 m	0.8°
15	Bank A	7.277°	-35.030°	20 m	0.8°
16	Bank A	7.180°	-34.002°	20 m	0.8°
17	Bank A	7.090°	-32.992°	20 m	0.8°
18	Bank A	7.006°	-31.996°	20 m	0.8°
19	Bank A	6.928°	-31.015°	20 m	0.8°
20	Bank A	6.854°	-30.048°	20 m	0.8°

Channel Distribution

(to be continued)

Channel No.	Bank No.	Horizontal Angle (Azimuth) Offset	Vertical Angle (Elevation)	Range Capability @10% Reflectivity	Horizontal Resolution @10 Hz
21	Bank A	6.785°	-29.093°	20 m	0.8°
22	Bank A	6.721°	-28.149°	20 m	0.8°
23	Bank A	6.660°	-27.216°	20 m	0.8°
24	Bank A	6.602°	-26.292°	20 m	0.8°
25	Bank A	6.549°	-25.378°	20 m	0.8°
26	Bank A	6.498°	-24.473°	20 m	0.8°
27	Bank A	6.450°	-23.575°	20 m	0.8°
28	Bank A	6.405°	-22.685°	20 m	0.8°
29	Bank A	6.363°	-21.802°	20 m	0.8°
30	Bank A	6.323°	-20.926°	20 m	0.8°
31	Bank A	6.285°	-20.056°	20 m	0.8°
32	Bank A	6.250°	-19.191°	20 m	0.8°
33	Bank B	-6.217°	-18.331°	20 m	0.8°
34	Bank B	-6.186°	-17.477°	20 m	0.8°
35	Bank B	-6.157°	-16.627°	20 m	0.8°
36	Bank B	-6.129°	-15.781°	20 m	0.8°
37	Bank B	-6.104°	-14.940°	20 m	0.8°
38	Bank B	-6.080°	-14.102°	20 m	0.8°
39	Bank B	-6.057°	-13.268°	20 m	0.8°
40	Bank B	-6.037°	-12.436°	20 m	0.8°

Channel Distribution

(to be continued)

Channel No.	Bank No.	Horizontal Angle (Azimuth) Offset	Vertical Angle (Elevation)	Range Capability @10% Reflectivity	Horizontal Resolution @10 Hz
41	Bank B	-6.018°	-11.608°	20 m	0.8°
42	Bank B	-6.000°	-10.783°	20 m	0.8°
43	Bank B	-5.984°	-9.960°	20 m	0.8°
44	Bank B	-5.969°	-9.139°	20 m	0.8°
45	Bank B	-5.955°	-8.320°	20 m	0.8°
46	Bank B	-5.943°	-7.503°	20 m	0.8°
47	Bank B	-5.927°	-6.688°	20 m	0.8°
48	Bank B	-5.923°	-5.874°	20 m	0.8°
49	Bank B	-5.915°	-5.061°	20 m	0.8°
50	Bank B	-5.908°	-4.250°	20 m	0.8°
51	Bank B	-5.902°	-3.439°	20 m	0.8°
52	Bank B	-5.897°	-2.630°	20 m	0.8°
53	Bank B	-5.894°	-1.820°	20 m	0.8°
54	Bank B	-5.892°	-1.012°	20 m	0.8°
55	Bank B	-5.891°	-0.203°	20 m	0.8°
56	Bank B	-5.891°	0.606°	20 m	0.8°
57	Bank B	-5.893°	1.414°	20 m	0.8°
58	Bank B	-5.896°	2.223°	20 m	0.8°
59	Bank B	-5.899°	3.033°	20 m	0.8°
60	Bank B	-5.905°	3.843°	20 m	0.8°

Channel Distribution

(to be continued)

Channel No.	Bank No.	Horizontal Angle (Azimuth) Offset	Vertical Angle (Elevation)	Range Capability @10% Reflectivity	Horizontal Resolution @10 Hz
61	Bank B	-5.911°	4.654°	20 m	0.8°
62	Bank B	-5.919°	5.466°	20 m	0.8°
63	Bank B	-5.927°	6.279°	20 m	0.8°
64	Bank B	-5.938°	7.094°	20 m	0.8°
65	Bank C	5.949°	7.910°	20 m	0.4°
66	Bank C	5.962°	8.728°	20 m	0.4°
67	Bank C	5.976°	9.547°	20 m	0.4°
68	Bank C	5.992°	10.369°	20 m	0.4°
69	Bank C	6.008°	11.194°	20 m	0.4°
70	Bank C	6.027°	12.020°	20 m	0.4°
71	Bank C	6.047°	12.850°	20 m	0.4°
72	Bank C	6.068°	13.683°	20 m	0.4°
73	Bank C	6.091°	14.519°	20 m	0.4°
74	Bank C	6.116°	15.359°	20 m	0.4°
75	Bank C	6.143°	16.202°	20 m	0.4°
76	Bank C	6.171°	17.050°	20 m	0.4°
77	Bank C	6.201°	17.902°	20 m	0.4°
78	Bank C	6.233°	18.759°	20 m	0.4°
79	Bank C	6.267°	19.621°	20 m	0.4°
80	Bank C	6.304°	20.488°	20 m	0.4°

Channel Distribution

(to be continued)

Channel No.	Bank No.	Horizontal Angle (Azimuth) Offset	Vertical Angle (Elevation)	Range Capability @10% Reflectivity	Horizontal Resolution @10 Hz
81	Bank C	6.343°	21.362°	20 m	0.4°
82	Bank C	6.384°	22.241°	20 m	0.4°
83	Bank C	6.427°	23.128°	20 m	0.4°
84	Bank C	6.474°	24.022°	20 m	0.4°
85	Bank C	6.523°	24.923°	20 m	0.4°
86	Bank C	6.575°	25.833°	20 m	0.4°
87	Bank C	6.631°	26.751°	20 m	0.4°
88	Bank C	6.690°	27.679°	20 m	0.4°
89	Bank C	6.752°	28.618°	20 m	0.4°
90	Bank C	6.819°	29.567°	20 m	0.4°
91	Bank C	6.890°	30.528°	20 m	0.4°
92	Bank C	6.966°	31.502°	20 m	0.4°
93	Bank C	7.047°	32.490°	20 m	0.4°
94	Bank C	7.134°	33.493°	20 m	0.4°
95	Bank C	7.227°	34.512°	20 m	0.4°
96	Bank C	7.327°	35.549°	20 m	0.4°
97	Bank D	-6.250°	19.191°	20 m	0.4°
98	Bank D	-6.285°	20.056°	20 m	0.4°
99	Bank D	-6.323°	20.926°	20 m	0.4°
100	Bank D	-6.363°	21.802°	20 m	0.4°

Channel Distribution

(to be continued)

Channel No.	Bank No.	Horizontal Angle (Azimuth) Offset	Vertical Angle (Elevation)	Range Capability @10% Reflectivity	Horizontal Resolution @10 Hz
101	Bank D	-6.405°	22.685°	20 m	0.4°
102	Bank D	-6.450°	23.575°	20 m	0.4°
103	Bank D	-6.498°	24.473°	20 m	0.4°
104	Bank D	-6.549°	25.378°	20 m	0.4°
105	Bank D	-6.602°	26.292°	20 m	0.4°
106	Bank D	-6.660°	27.216°	20 m	0.4°
107	Bank D	-6.721°	28.149°	20 m	0.4°
108	Bank D	-6.785°	29.093°	20 m	0.4°
109	Bank D	-6.854°	30.048°	20 m	0.4°
110	Bank D	-6.928°	31.015°	20 m	0.4°
111	Bank D	-7.006°	31.996°	20 m	0.4°
112	Bank D	-7.090°	32.992°	20 m	0.4°
113	Bank D	-7.180°	34.002°	20 m	0.4°
114	Bank D	-7.277°	35.030°	20 m	0.4°
115	Bank D	-7.380°	36.076°	20 m	0.4°
116	Bank D	-7.492°	37.143°	20 m	0.4°
117	Bank D	-7.612°	38.231°	20 m	0.4°
118	Bank D	-7.743°	39.343°	20 m	0.4°
119	Bank D	-7.885°	40.482°	20 m	0.4°
120	Bank D	-8.040°	41.651°	20 m	0.4°

Channel Distribution
(continued)

Channel No.	Bank No.	Horizontal Angle (Azimuth) Offset	Vertical Angle (Elevation)	Range Capability @10% Reflectivity	Horizontal Resolution @10 Hz
121	Bank D	-8.209°	42.852°	15 m	0.4°
122	Bank D	-8.396°	44.090°	15 m	0.4°
123	Bank D	-8.603°	45.369°	15 m	0.4°
124	Bank D	-8.833°	46.695°	15 m	0.4°
125	Bank D	-9.091°	48.074°	15 m	0.4°
126	Bank D	-9.384°	49.515°	15 m	0.4°
127	Bank D	-9.720°	51.028°	15 m	0.4°
128 (top)	Bank D	-10.108°	52.627°	15 m	0.4°

Appendix II Absolute Time of Point Cloud Data

■ Source of Absolute Time

The lidar retrieves the current absolute time by connecting to an external clock source (PTP).

- The lidar connects to a third-party PTP master to obtain the absolute time.
- Users may configure the PTP settings (see Section 4.2 Web Control – Settings).
- Users may check the PTP signal status (see Section 4.1 Web Control - Home).
- The lidar does not output GPS Data Packets.

The absolute time is updated as follows.

PTP Status	Date & Time (accurate to μs)	Description
Free Run	Virtual	Starts counting from a virtual UTC time (such as 2000-01-01 00:00:00), using the lidar's internal 1 Hz signal.
Tracking or Locked	Synchronized	Extract the actual date and time from the PTP Master's messages.
Frozen	Drifting	Starts counting from the last synchronized time, using the lidar's internal 1 Hz signal. Will gradually drift from the actual PTP time.

Notes

- PTP is a Plug & Play protocol; the lidar works as a PTP slave device and requires no additional setup.
- The timestamps and Date & Time fields in Point Cloud Data Packets strictly follow the PTP master device. Certain PTP master devices may have a specified offset from the lidar's time output. Please verify the configuration and calibration of your PTP master device.

Hesai v. Ouster, IPR2023-01422
Ouster Ex. 2013 - Page 87 of 98

■ Absolute Time of Point Cloud Data Packets

The absolute time of a Point Cloud Data Packet (denoted as t0) is calculated as follows:

$$t0 = t_s + t_ms$$

where

- t_s is the whole second part (see the Date & Time field).
- t_ms is the microsecond part (see the Timestamp field).
- For definition of the above fields (see Section 3.1.2 Point Cloud UDP Data – Tail).

■ Start Time of Each Block

Given the absolute time of a Point Cloud Data Packet (t0), the start time of each block (i.e., the time when the first firing starts) can be calculated.

Single Return Mode

Block	Start Time (μs)
Block 1	t0 + 9
Block 2	t0 + 9 + 111.11

Dual Return Mode

Block	Start Time (μs)
Block 1 & Block 2	t0 + 9

Hesai v. Ouster, IPR2023-01422
Ouster Ex. 2013 - Page 88 of 98

■ Firing Sequences

All channels are divided into four banks, see Appendix I (Channel Distribution).
Two firing sequences are defined below and are executed alternately (i.e. the next round of firing uses a different firing sequence from this round of firing).

Firing Sequence 1	Firing Sequence 2
Banks CDB fire; Bank A rests	Banks CDA fire, Bank B rests

The current firing sequence is indicated by the **Mode Flag** field in the Tail of Point Cloud Data Packets, see Section 3.1.2 (Point Cloud UDP Data).

Hesai v. Ouster, IPR2023-01422
Ouster Ex. 2013 - Page 89 of 98

■ Firing Time Offset of Each Channel

Assume that the start time of Block m is T(m), m ∈ {1, 2}, then the laser firing time of Channel n in Block m is

$$t(m, n) = T(m) + \Delta t(n),\ n \in \{1, 2, \ldots, 128\}.$$

The firing time offsets Δt(n) are listed in the lidar unit's **firetime correction file**, shown in the table next page.

- LoopNum is the number of firing sequences.
- "Loop1" and "Loop2" are the firing channels of Firing Sequences 1 and 2, respectively. The firing channels are listed in the ascending order of Δt(n).
- "Firetime1" and "Firetime2" are the firing time offsets Δt(n) (Unit: μs), which are the same.
- The file contains 99 rows of effective data (3 header rows and 96 channel rows), appended by 32 all-zero rows (shown as ellipses in the table next page).

To obtain the firetime correction file:

- send PTC command 0xA9, as described in Hesai TCP API Protocol (Chapter 5);
- or export the file using PandarView, see the PandarView user manual.

Hesai v. Ouster, IPR2023-01422
Ouster Ex. 2013 - Page 90 of 98

Firetime Correction File

(continued in the following pages)

EEFF	1	1	
Horizontal Resolution Mode	1	LoopNum	2
Loop1	Firetime1	Loop2	Firetime2
99	0.6	65	0.6
65	1.456	99	1.456
35	2.312	1	2.312
102	3.768	72	3.768
72	4.624	102	4.624
38	5.48	8	5.48
107	6.936	73	6.936
73	7.792	107	7.792
43	8.648	9	8.648
110	10.104	80	10.104
80	10.96	110	10.96
46	11.816	16	11.816
115	13.272	81	13.272
81	14.128	115	14.128
51	14.984	17	14.984
118	16.44	88	16.44
88	17.296	118	17.296
54	18.152	24	18.152
123	19.608	89	19.608
89	20.464	123	20.464
59	21.32	25	21.32

126	22.776	96	22.776
96	23.632	126	23.632
62	24.488	32	24.488
97	25.944	67	25.944
67	26.8	97	26.8
33	27.656	3	27.656
104	29.112	70	29.112
70	29.968	104	29.968
40	30.824	6	30.824
105	32.28	75	32.28
75	33.136	105	33.136
41	33.992	11	33.992
112	35.448	78	35.448
78	36.304	112	36.304
48	37.16	14	37.16
113	38.616	83	38.616
83	39.472	113	39.472
49	40.328	19	40.328
120	41.784	86	41.784
86	42.64	120	42.64
56	43.496	22	43.496
121	44.952	91	44.952
91	45.808	121	45.808
57	46.664	27	46.664
128	48.12	94	48.12
94	48.976	128	48.976

64	49.832	30	49.832
98	51.288	68	51.288
68	52.144	98	52.144
34	53	4	53
103	54.456	69	54.456
69	55.312	103	55.312
39	56.168	5	56.168
106	57.624	76	57.624
76	58.48	106	58.48
42	59.336	12	59.336
111	60.792	77	60.792
77	61.648	111	61.648
47	62.504	13	62.504
114	63.96	84	63.96
84	64.816	114	64.816
50	65.672	20	65.672
119	67.128	85	67.128
85	67.984	119	67.984
55	68.84	21	68.84
122	70.296	92	70.296
92	71.152	122	71.152
58	72.008	28	72.008
127	73.464	93	73.464
93	74.32	127	74.32
63	75.176	29	75.176
100	76.632	66	76.632

66	77.488	100	77.488
36	78.344	2	78.344
101	79.8	71	79.8
71	80.656	101	80.656
37	81.512	7	81.512
108	82.968	74	82.968
74	83.824	108	83.824
44	84.68	10	84.68
109	86.136	79	86.136
79	86.992	109	86.992
45	87.848	15	87.848
116	89.304	82	89.304
82	90.16	116	90.16
52	91.016	18	91.016
117	92.472	87	92.472
87	93.328	117	93.328
53	94.184	23	94.184
124	95.64	90	95.64
90	96.496	124	96.496
60	97.352	26	97.352
125	98.808	95	98.808
95	99.664	125	99.664
61	100.52	31	100.52
0	0	0	0
…	…	…	…
0	0	0	0

Appendix III Power Supply Requirements

To ensure the input voltage at the lidar's connector is within 9 to 32 V DC, please check the specifications of the power supply and cables.

■ Power Supply

Should be able to provide at least 4 A, 35 W.

■ Cable Wire Gauge

The lidar uses 18 AWG power cables. We recommend using cables of 18 AWG or thicker wire gauges.

■ Minimum Source Voltage

Calculations can be made as follows:

- Cable length from the power source to the lidar connector is defined as L (unit: m).
- When using 18 AWG (24.7 Ω/km) cables, cable resistance is estimated as $\mathrm{R_1 = 0.05L}$ (unit: Ω).
- Resistance of the lidar connector described in Section 2.2 (Interfaces) is defined as $\mathrm{R_2}$, excluding jumper cable assembly. $\mathrm{R_2 \leq 20\ m\Omega}$.
- In all operating conditions, the lidar's peak power consumption $\mathrm{P_{peak} \leq 35W}$.
- A conservative estimate of the minimum source voltage is

$$\mathrm{U_{source,min} = 9 + \frac{P_{peak,max}}{9} * (R_1 + R_{2,max}) \approx (9.1 + 0.2L)}\ \text{(unit: V)}.$$

(Continued on the next page)

Hesai v. Ouster, IPR2023-01422
Ouster Ex. 2013 - Page 95 of 98

(Continued)

Users may also estimate the minimum source voltage using the following lookup table.

Cable Total Length L	Minimum Source Voltage U
2 m	9.5 V
5 m	10.1 V
7 m	10.5 V
10 m	11.1 V

⚠ When the lidar's input voltage approaches 32 V, make sure there is no additional overshoot in the external power system. Even a short period of overvoltage can cause irreversible damage to the lidar.

Hesai v. Ouster, IPR2023-01422
Ouster Ex. 2013 - Page 96 of 98

Appendix IV Legal Notice

Copyright (C) 2017-2023 Hesai Technology Co., Ltd.
All rights reserved. Use or reproduction of this manual in parts or its entirety without the authorization of Hesai is prohibited.

Hesai Technology makes no representations or warranties, either expressed or implied, with respect to the contents hereof and specifically disclaims any warranties, merchantability, or fitness for any particular purpose. Further, Hesai Technology reserves the right to revise this publication and to make changes from time to time in the contents hereof without obligation to notify any person of such revision or changes.

HESAI and HESAI logo are registered trademarks of Hesai Technology. All other trademarks, service marks, and company names in this manual or on Hesai's official website are properties of their respective owners.

The software included in this product contains copyright that is registered under Hesai Technology. Any third party is not permitted, except as expressly permitted by licensor or expressly required by applicable law, to decompile, reverse engineer, disassemble, modify, rent, lease, loan, distribute, sublicense, create derivative works based on the whole or any part of the software.

Hesai Product Warranty Service Manual is on the Warranty Policy page of Hesai's official website: https://www.hesaitech.com/warranty-policy/

Hesai Technology Co., Ltd.

Phone: +86 400 805 1233
Website: www.hesaitech.com
Address: Building A, Haisu Culture Plaza, Shanghai, China

Business Email: info@hesaitech.com
Service Email: service@hesaitech.com