Velodyne LiDAR™

HDL-64E S3

HIGH DEFINITION REAL-TIME 3D LiDAR

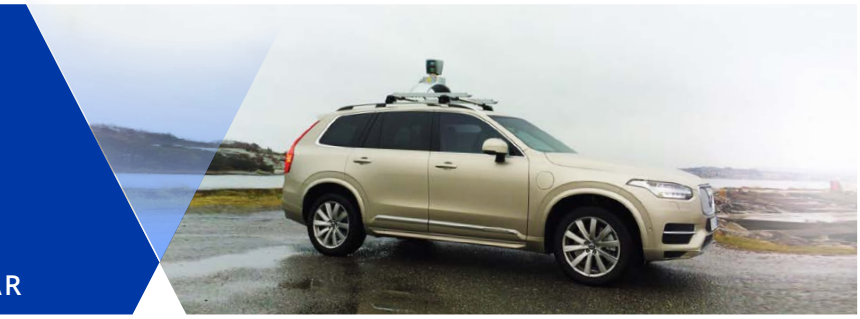

Automotive | Mining | Mapping | Geology | Urban Planning | R&D

HDL-64E

Real-Time 3D LiDAR

The HDL-64E S3 is Velodyne's high resolution and performance LiDAR sensor product. It captures high definition, real-time 3D information about the surrounding environment. It is ideal for applications such as autonomous vehicle navigation, 3D mapping and surveying plus industrial automation.

Wide Field of View and High Frame Rate

The HDL-64E S3 provides excellent resolution and field of views to generate a wealth of data about the surrounding environment. It utilizes 64 LiDAR channels with a vertical field of view of 26.9° and delivers a real-time 360° horizontal field of view with its patented rotating head design. The rotation rate is user-selectable from 5 Hz to 20 Hz to enable the user to determine the density of data points generated by the LiDAR sensor. The HDL-64E S3 generates a point cloud of up to ~2,200,000 points per second with a range of up to 120 m. The HDL-64E S3 is designed to operate over a wide temperature range (-10°C to +60°C) and challenging environments to support diverse operating conditions and applications.

HDL-64E S3

DIMENSIONS

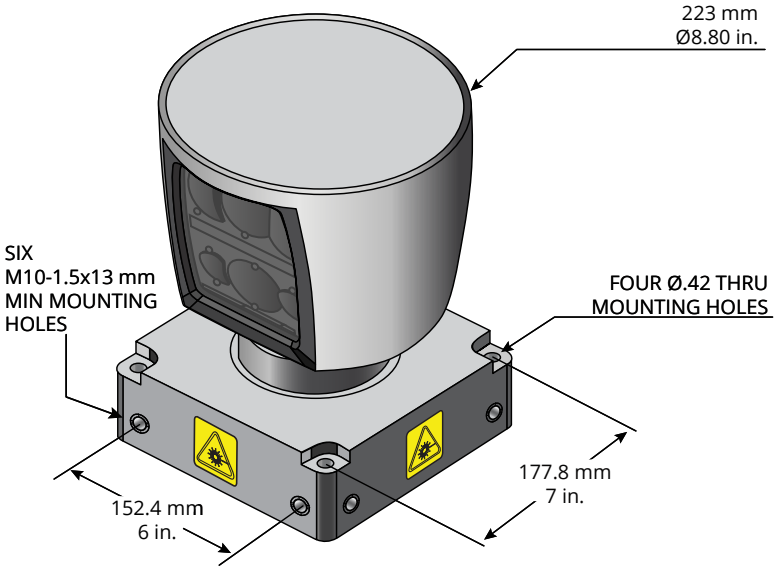

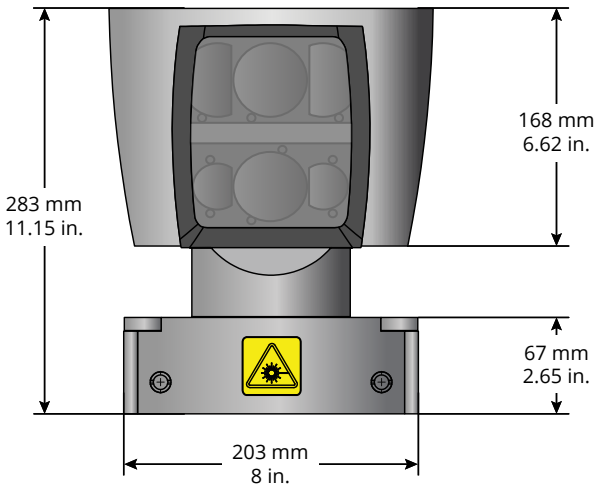

Hesai v. Ouster, IPR2023-01422
Ouster Ex. 2028 - Page 1 of 2

HDL-64E

High Definition LiDAR Sensor

The HDL-64E S3 provides high definition 3 dimensional information about the surrounding environment.

	Specifications:
Sensor:	• 64 channels • Measurement Range: Up to 120 m • Range Accuracy: Up to ±2 cm (Typical)[1] • Field of View (Vertical): +2.0° to -24.9° (26.9°) • Angular Resolution (Vertical): 0.4° • Field of View (Horizontal): 360° • Angular Resolution (Horizontal/Azimuth): 0.08° – 0.35° • Rotation Rate: 5 Hz – 20 Hz
Laser:	• Laser Product Classification: Class 1 Eye-safe • Wavelength: 903 nm
Mechanical/ Electrical/ Operational	• Power Consumption: 60 W (Typical)[2] • Operating Voltage: 12 V – 32 V • Weight: 28 lbs. (12.7 Kg) (without cabling) • Dimensions: 215 mm Diameter x 283 mm Height (Base: 203 mm x 203 mm) • Operating Temperature: -10°C to +60°C[3] • Storage Temperature: -40°C to +85°C
Output:	• 3D LiDAR Data Points Generated: - Single Return Mode: ~1,300,000 points per second - Dual Return Mode: ~2,200,000 points per second[4] • 100 Mbps Ethernet Connection • UDP Packets Contain: - Time of Flight Distance Measurement - Intensity Measurement - Rotation Angles - Synchronized Time Stamps (µs resolution) • GPS: $GPRMC NMEA Sentence from GPS Receiver (GPS not included)

63-9194 Rev-J

For more details and ordering information, contact Velodyne Sales (sales@velodyne.com)

1. Greater than or equal to 80% of channels at ambient wall test; remaining channels better than or equal to 5 cm.
2. Operating power may be affected by factors including but not limited to range, reflectivity and environmental conditions.
3. Operating temperature may be affected by factors including but not limited to air flow and sun load.
4. Configuration dependent.

CLASS 1 LASER PRODUCT

Copyright ©2018 Velodyne LiDAR, Inc.
Specifications are subject to change without notice. Banner image courtesy of Volvo Cars USA, LLC. Other trademarks or registered trademarks are property of their respective owners.

Velodyne LiDAR, Inc. 345 Digital Drive, Morgan Hill, CA 95037 / lidar@velodyne.com / 408.465.2800 | www.velodynelidar.com