UNITED STATES PATENT AND TRADEMARK OFFICE

BEFORE THE PATENT TRIAL AND APPEAL BOARD

SPECTRUM SOLUTIONS L.L.C.
Petitioner,

v.

DNA GENOTEK INC.
Patent Owner.

Patent No. 11,002,646

Inter Partes Review No. IPR2022-01347

DECLARATION OF DR. STEVEN WERELEY

Spectrum Ex. 1039
Spectrum v. DNA Genotek
IPR2023-01424

I, Dr. Steven Wereley, make this declaration in connection with the proceeding identified above.

VII. INTRODUCTION

1. I have been retained by counsel for DNA Genotek Inc. ("Genotek" or "Patent Owner") as a technical expert in connection with the proceeding identified above. I have been asked to offer my opinions concerning Ground 1 from the Petition *Inter Partes* Review of United States Patent No. 11,002,646 ("the '646 patent"). I submit this declaration in support of Patent Owner's Response to the Petition for *Inter Partes* Review of the '646 Patent.

2. I am being paid at an hourly rate of $710 for my work on this matter. My compensation does not depend in any way upon the opinions or testimony that I provide or the outcome of this litigation.

3. I am not a legal expert and offer no legal opinion in my report.

VIII. QUALIFICATIONS

4. I have two undergraduate degrees: a Bachelor of Arts in Physics from Lawrence University, awarded in 1990, and a Bachelor of Science in Mechanical Engineering from Washington University in St. Louis, also awarded in 1990. The two degrees were awarded in the same year because I pursued a cooperative program where the classes from each university satisfied the requirements of the other university.

5. I received my Master of Science in 1992 and Doctor of Philosophy in 1997, both from the Northwestern University Department of Mechanical Engineering. While pursuing my M.S. and Ph.D., I specialized in fluid mechanics, i.e. the study of how fluids move. After completing these degrees, I performed a postdoctoral research appointment at the University of California, Santa Barbara in the Department of Mechanical and Environmental Engineering from 1997 until 1999. During my time at the University of California, Santa Barbara, I specialized in the study of microfluidics—the study of how fluids move in very small systems.

6. I am currently and have been an employee of the Purdue University School of Mechanical Engineering since August 1999. I was hired as an Assistant Professor, promoted to Associate Professor in 2006 and subsequently to Professor in 2010. I have been invited to serve as a visiting professor at three different universities: Technische Universität Darmstadt (Darmstadt, Germany), Universität der Bundeswehr (Munich, Germany) and Royal Melbourne Institute of Technology (Melbourne, Australia). These visits were partially paid for by the hosting universities. I hold the rank of Fellow in both the American Society of Mechanical Engineers (ASME) and the American Physical Society (APS). Fellow status in the American Physical Society is an honor that is bestowed upon only 0.5% of APS membership.

7. I have engaged in many research projects in the field of fluid mechanics, resulting in a long list of publications featuring two co-authored textbooks, 14 book chapters, 95 peer-reviewed journal articles, nearly 200 conference papers and presentations, and 11 co-invented patents. I have delivered invited lectures all over the world. Some of these invited lectures have been at large international scientific meetings such as the World Conference on Experimental Heat Transfer, Fluid Mechanics and Thermodynamics (2015, Lisbon, Portugal), International Conference on Nanochannels, Microchannels, and Minichannels (2012, Puerto Rico, USA), International Conference on Fluid Mechanics and Fluid Power (2006, Mumbai, India), among many others.

8. Much of my research throughout my career has been in the field of mechanical devices. The topics included using arrays of valves to move fluid samples through devices. For example, I have published research on "Light-actuated electrothermal microfluidic flow for micro-mixing," published in Journal of Micromechanics and Microengineering in 2018, and "On-chip dilution in nanoliter droplets," published in Analyst in 2015. Even during my Ph.D. work in 1997, I designed a system with pumps and valves for the purpose of evaluating rotating filtration systems of the type used for separating cellular components from whole blood.

9. I have received a number of awards during my career for my research, including my work in fluid devices. For example, I have received recognition for my following engineering work: 1st Place, Gold Division, Burton D. Morgan Business Plan Competition, Ahmed M. Amin, S.C. Jacobson, M. Thottethodi, T.N. Vijaykumar and S.T. Wereley, "Microfluidic Innovations," Purdue University, West Lafayette, IN (February 2009); 1st Place Poster, Engineering Sciences, SJ Williams, A Kumar, and ST Wereley, 2009 Graduate Student Poster Competition sponsored by Sigma Xi, Purdue University, West Lafayette, IN (February 2009); and 21st Annual Purdue University Burton Morgan Business Plan Competition, 4th place, A. Amin, H.S. Chuang, T.N. Vijaykumar, T. Thodentoddi, S.T. Wereley, and S. Jacobson, developed a business plan for commercializing programmable Lab-on-a-Chip devices.

10. Many of my patents involve fluid mechanics. These include "Variable volume mixing and automatic fluid management for programmable microfluids," U.S. Patent No. 9,211,539 (2015); "Open optoelectrowetting droplet actuation device and method," US Patent 8,753,498 (2014); and "Microfluidic Purge Valve," U.S. Patent No. 8,376,317 (2013); among others.

11. In 2009, I co-founded a company called Microfluidics Innovations, LLC. Microfluidics Innovations specialized in designing and manufacturing automated liquid handling systems. The company was founded based on

intellectual property developed during research from approximately the five years predating its founding. As a co-founder of the company, my role was primarily that of scientific advisor in the fluid handling area. As such, I was involved in many projects adapting Microfluidics Innovations' products to our customers' needs.

12. I have also taught a number of courses that cover the use of valves and other mechanical aspects common to fluid devices. For example, I have taught "Introduction to Mechanical Engineering Design," "Introduction to Fluid Mechanics," "Intermediate Fluid Mechanics," and "Micro/Nano Fluid Mechanics." I have also provided guest lectures in other professors' courses, including classes titled "Microscale Fluid Actuation" and "Microscale Pumping Schemes." Since starting at Purdue University in 1999, I have taught the undergraduate fluid mechanics course approximately 15 times. This class concentrates on fundamental fluid flow and fluid system concepts.

13. A copy of my curriculum vitae, attached to this declaration as Appendix A, provides details about my employment and publication history.

IX. MATERIALS CONSIDERED

14. In forming the opinions set forth in this report, I considered and relied upon my experience, knowledge of the field, and education.

15. In preparing this declaration, I have reviewed, among other things, the following materials: (a) U.S. Patent No. 11,002,646 (Ex. 1001); (b) Declaration of Karl R. Leinsing, MSME, PE, in Support of Petition for *Inter Partes* Review of U.S. Patent 11,002,646 (Ex. 1002); (c) U.S. Patent Pub. No. US 2012/0325721 to Plante, et al. ("Plante") (Ex. 1003); (d) International Patent Publication No. WO 2005/051775 to Cho ("Cho") (Ex. 1004); (e) U.S. Patent No. 7,464,811 to Patterson, et al. ("Patterson") (Ex. 1005); (f) U.S. Provisional Patent Application No. 61/861,329; (g) U.S. Patent No. 8,221,381; (h) U.S. Patent Application Publication No. 2003/0153895; (i) U.S. Patent No. 5,643,767 to Fischetti et al; (k) Genotek's RE-100 device; (j) Genotek's OG-250 device; (l) the Petition for *Inter Partes* Review of the '646 patent to which my declaration relates.

X. DEFINITIONS AND STANDARDS

16. I have been informed and understand that claims are construed from the perspective of a person of ordinary skill in the art (POSA) at the time of the claimed invention, and that during *inter partes* review, claims are to be given their broadest reasonable construction consistent with the specification.

17. I have also been informed and understand that the subject matter of a patent claim is obvious if the differences between the subject matter of the claim and the prior art are such that the subject matter as a whole would have been obvious at the time the invention was made a POSA to which the subject matter

pertains. I have also been informed that the framework for determining obviousness involves considering the following factors: (i) the scope and content of the prior art; (ii) the differences between the prior art and the claimed subject matter; (iii) the level of ordinary skill in the art; and (iv) any objective evidence of non-obviousness. I understand that the claimed subject matter would have been obvious to a POSA if, for example, it results from the combination of known elements according to known methods to yield predictable results, the simple substitution of one known element for another to obtain predictable results, use of a known technique to improve similar devices in the same way or applying a known technique to a known device ready for improvement to yield predictable results. I have also been informed that the analysis of obviousness may include recourse to logic, judgment, and common sense available to a POSA that does not necessarily require explication in any reference.

XI. THE '646 PATENT

18. The '646 Patent is entitled "Devices, Solutions and Methods for Sample Collection." The '646 Patent claims priority to U.S. Provisional Application No. 61/498,584, filed on June 19, 2011; U.S. Provisional Application No. 61/598,601, filed on February 14, 2012; and U.S. Provisional Application No. 61/598,618, filed on February 14, 2012.

19. The ’646 Patent claims a mechanical innovation. The ’646 Patent discusses two primary problems: (1) collecting a biological sample, mixing it with a preservative, and containing the mixture for transport;[1] and (2) the preservative must preserve the sample so that it can be later processed at a laboratory.[2] Collecting the biological sample, mixing it with the preservative, containing the mixture for transport, and transporting the mixture is primarily a mechanical problem: the sample must be safely collected, the preservative safely added, and the mixture sealed in a container suitable for shipping.

20. The novel kit, covered by the claims of the ’646 Patent, is useful for collecting a biological sample from a subject, safely mixing the collected sample with a composition intended to stabilize, preserve, or facilitate the recovery of components of the sample, and then securely transporting the container with preserved biological sample inside.[3]

XII. LEVEL OF ORDINARY SKILL IN THE ART

21. I understand that U.S. patent law interprets patents and prior art from the perspective of a POSA at the time of the priority date of a patent. In forming

---

[1] Ex. 1001 at 2:51-61; 4:1-11.

[2] Ex. 1001 at 3:60-4:15.

[3] Ex. 1001 at 2:51-61; 3:60-4:15.

my opinions below, I have assumed that the earliest priority date of the ’646 Patent is June 19, 2011.

22. It is my opinion that a POSA for the ’646 Patent would have a Bachelor’s degree in a scientific field relevant to the mechanical aspects of containers and valves in disposable medical devices and some experience in disposable medical devices. More education may compensate for less experience, and vice-versa. At the time of the ’646 Patent, I consider myself to have been at least at the level of ordinary skill in the art for the mechanical aspects of the ’646 Patent.

23. While I agree with Mr. Leinsing that a POSA for the ’646 Patent would have some experience with medical devices, I disagree that it must be at least three years of experience. It is my opinion that the experience in the field may be supplemented by further education. I also disagree that a POSA would necessarily have a Bachelor’s degree in the engineering field. It is my opinion that a POSA for the mechanical aspects would require a Bachelor’s degree in some scientific field, but not necessarily engineering.

24. I have read Mr. Leinsing’s description of the level of skill in the art for the ’646 Patent as requiring a person with mechanical experience to have had access to, or worked as part of a team and collaborated with, a person with the other, complementary qualifications for the chemical aspects of each patent. While

I agree that a POSA would have some relevant mechanical experience, I disagree that the person would have "worked as a part of a team" and collaborated with another for the chemical/biological aspects. There are many individuals in this field with both mechanical and chemical/biological expertise. It is my opinion that a POSA for both the mechanical and chemical aspects of the'646 Patent could be a single person.

XIII. GROUND 1—THE '646 PATENT IS VALID OVER PLANTE IN VIEW OF CHO

A. A POSA Would Not Have Been Motivated to Replace Plante's Knife

25. I understand that Mr. Leinsing has argued that a POSA would have been motivated by design incentives to combine Cho's cap in Plante's saliva collection device in order to replace Plante's knife.[4] I disagree with Mr. Leinsing. It is my opinion that a POSA would not have been motivated by design incentives to replace Plante's knife.

1. A POSA Would Not Recognize that Plante's Knife Created a Risk of Injury

26. I understand that Mr. Leinsing argues that a POSA would have been motivated to replace Plante's knife because a POSA would have perceived Plante's

[4] Ex. 1002 at ¶¶ 67, 71.

knife as creating a risk of injury.[5] I disagree with Mr. Leinsing. A POSA would not have been motivated to replace Plante's knife because a POSA would not have recognized that Plante's knife presented a risk of injury.

27. Plante describes a saliva collection device.[6] Plante's device has a cap and tube.[7] Plante's cap has a reservoir that stores a preservative.[8] Plante teaches that once the cap is fixed to the tube, the preservative is mixed with the biological sample.[9] Upon closing the cap, a knife within the tube punctures the thin membrane or foil that seals the reservoir in the cap, thereby releasing fluid from the reservoir into the sample collection vessel to mix with a biological sample in the vessel.[10]

28. I understand that Genotek sold a saliva self-collection device entitled the "OG-100" and the "RE-100." Both the OG-100 and RE-100 had the same physical format. Genotek's RE-100 device, for example, describes a standard

---

[5] Ex. 1002 at ¶ 71.

[6] Ex. 1003 at Abstract.

[7] Ex. 1003 at [0035].

[8] Ex. 1003 at [0035].

[9] Ex. 1003 at [0035].

[10] Ex. 1003 at [0019], [0035], [0039].

saliva deposition procedure: "Do NOT swallow. As saliva gathers in your mouth, spit it into the Oragene container. Continue spitting until the amount of liquid saliva (not bubbles) reaches the level shown in picture #3."[11]

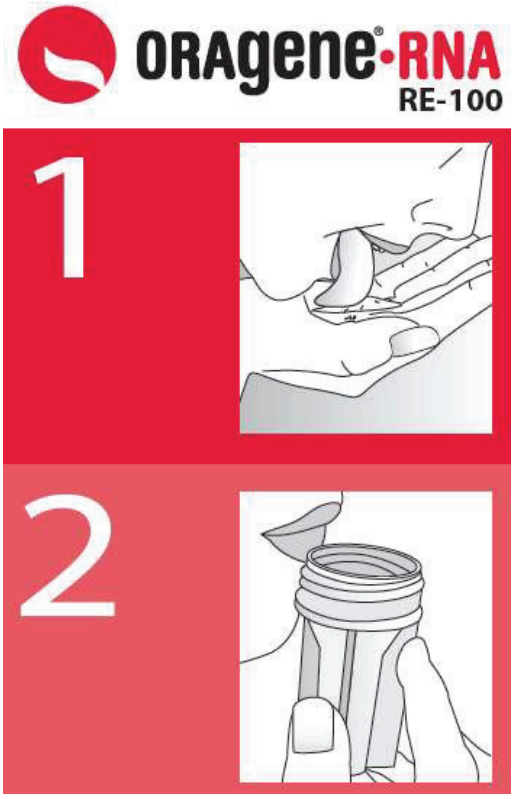

29. I have personally inspected the RE-100. I understand that Genotek's U.S. Patent 8,221,381 (the '381 Patent) depicts a product with the same physical format as the RE-100. The figures of the '381 Patent correctly depict the shape and position of the piercing members with respect to the position of the top of the

[11] Ex. 2014 at 1.

collection tube.[12] For example, Figure 23 of the '381 Patent resembles the RE-100:

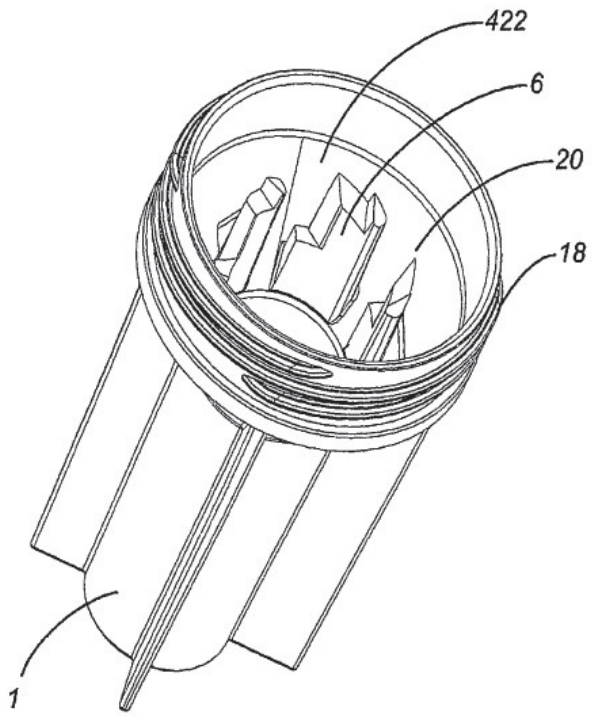

FIG. 23

30. Plante's device is similar to the RE-100 device. Both devices include a collection tube with an integral funnel.[13] In Plante and the RE-100, the funnel

[12] Ex. 2016 at Figs. 9, 10, 16, 18, 23, 24.

[13] Ex. 1003 at [0035] ("The receiving vessel element includes an integrated funnel portion 3 . . ."); Ex. 2016 at 2:17-49 ("[A] container system for releasably storing a

includes at least one piercing member to pierce a membrane and release fluid into the collection tube.[14]

31. I have used the RE-100 in accordance with its instructions for use. I found that the piercing member located within the RE-100 did not present a risk of injury to me when I deposited my saliva into the tube. As explained above, the RE-100 has a similar design and function to the device of Plante. Therefore, a POSA would not understand normal use of Plante's device to present a risk of injury to a user.

32. A POSA would not consider the device of Plante to independently present a risk of injury to a user. A POSA would take the relative dimensions of Figure 1 in Plante as a starting point when creating Plante's device.[15] The similarity of the RE-100 to Plante's figures demonstrates that Plante's scale is a suitable design. Plante also describes its knife as "carefully positioned," indicating that the position of the knife in the device is important.[16] Plante does not specify a

---

substance, comprising . . . a funnel comprising a first open end for receiving said sample . . .").

[14] Ex. 1003 at [0019], [0035], [0039]; Ex. 2016 at Abstract, 2:17-31.

[15] Ex. 1003 at Figure 4.

[16] Ex. 1003 at [0035].

precise saliva delivery collection process but describes several aspects of standard saliva processes.[17] Plante does not describe any non-standard saliva collection process that would increase the risk of injury to a user. Therefore, a POSA would carefully position Plante's piercing member in a way that reduces the risk of contact between a user and the piercing member. A POSA would not have placed the knife in a position that would increase the risk of injury to the user.

33. Non-normal use of Plante's device also does not present a risk of injury to a user. As explained above, a POSA would have positioned the knife in a position that would reduce the risk of contact between the user and the knife. If a user were to bring their finger directly down on the knife, the user's finger would likely contact the wall, and thereby be blocked from contacting the knife. Thus, Plante's wall provides a natural engineering control against a user inadvertently contacting the carefully positioned knife.

34. Even if there was some contact during non-normal use, the knife in Plante does not present a risk of injury to a user. The sharpness required to

---

[17] *See, e.g.*, Ex. 1003 at [0014] ("The funnel is provided so that a user can easily spit into the device and the received saliva will be conveyed into the small aperture of the receiving vessel."); [0039] ("[A] donor is required to [] repeatedly spit into the funnel aperture."].

puncture a thin film membrane is less than the sharpness required to cause an injury to a user. Such a thin film that can be punctured by accidental contact with a finger nail need not be so sharp that it risks injuring a user.[18] Transportation Security Administration (TSA) regulations recognize varying degrees of sharpness. For example, TSA allows plastic knives and butter knives on airplanes, but no other types of knives.[19] Nor would a POSA have been motivated to design the knife with any more sharpness than required to puncture a thin film membrane. Sharpness that can cause injury to a user is difficult to mold in plastic.

35. I tested the RE-100 to confirm that the positioning of the knife in Plante does not present a risk of injury to a user. The relative positioning of Plante's knife and wall is similar to the relative positioning of the RE-100's piercing member and wall. I tested and confirmed that the relative position of the piercing member and wall in the RE-100 provided a natural protection from inadvertent contact. Plante's knife is lower relative to its wall than the RE-100's piercing members are to its wall. This is apparent from the figure below, which

[18] See Ex. 1003 at [0035]

[19] https://www.tsa.gov/travel/security-screening/whatcanibring/items/knives.

compares the position of Plante's "knife"[20] to the RE-100's pointed members.[21] Therefore, Plante's device is designed to further minimize the risk of an inadvertent contact by a user on the piercing member.

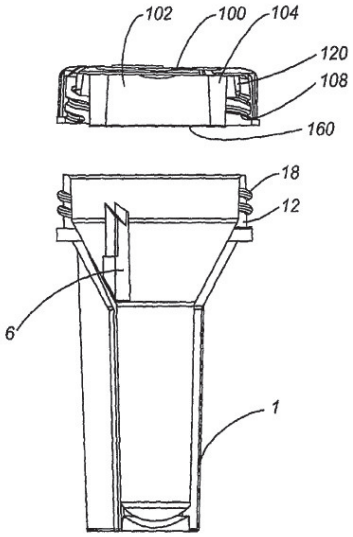

FIG. 24

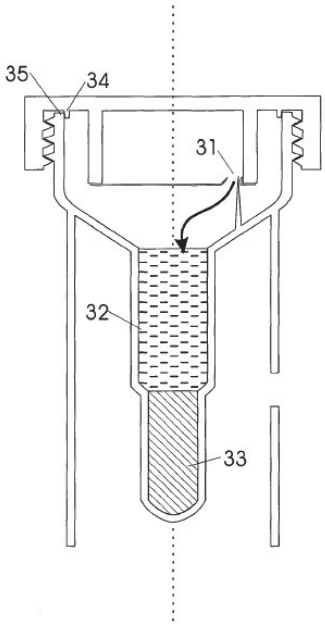

FIG. 3

36. I tested the RE-100 to confirm that the knife itself in Plante does not present a risk of injury to a user. Even if a user were to contact the piercing member (for example, a user intentionally contacts the piercing member or inadvertently contacts the piercing member but not the side wall), there is no such risk from the RE-100 piercing members. I placed my finger directly on a piercing

[20] Ex. 1003 at Fig. 24.

[21] Ex. 2016 at Fig. 3.

member of the RE-100 and applied pressure. Even applying pressure, I was not injured nor did I perceive a risk of injury.

37. I also commissioned testing of another RE-100 by another person, to confirm my rest results. Those tests had the same outcome—no injury or risk of injury. The following pictures walk through the testing of the RE-100.

38. The RE-100 device packages a cap, sample collection vessel, and instructions for use in a red box. A user must first remove the cap, sample collection vessel, and instructions for use. The below picture shows the components of the RE-100 once removed.

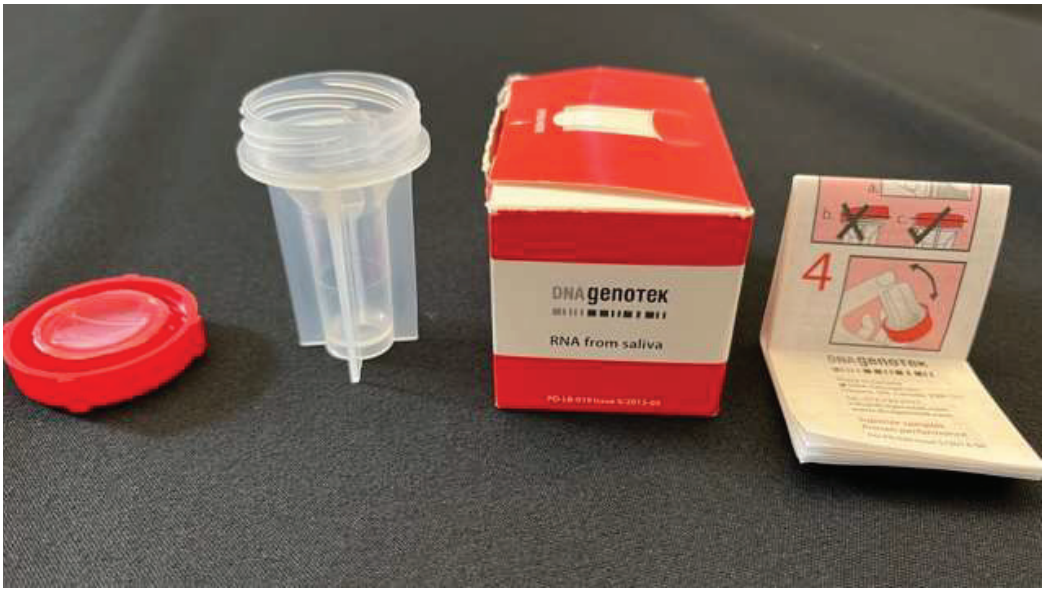

39. The below picture shows two close-ups of the piercing members within the RE-100's sample collection vessel.

40. I commissioned an individual to place a finger directly on a pointed member of the RE-100 apply pressure. The below photos show the applied pressure to the RE-100's pointed member.

41. I also tested Genotek's OG-250, which I understand to be a part of the '381 Patent family. The OG-250 is a saliva collection device.[22] The OG-250 includes a thin film membrane and pointed member like Plante. With my finger placed directly on a pointed member of the OG-250 and pressure applied, there was no injury nor did I perceive a risk of injury.

42. I also commissioned testing of another OG-250 device by another person, to confirm my rest results. Those tests had the same outcome—no injury or risk of injury. The following pictures walk through the testing of the OG-250.

[22] Ex. 2015 at 1.

43. The OG-250 device comprises a blue cap and sample collection vessel. The below picture shows the cap and sample collection vessel separated before use. The OG-250's sample collection vessel is marked by the following label: "Collect Saliva by: July 2008."

44. The below picture shows two close-ups of the piercing members within the OG-250's sample collection vessel.

45. I commissioned an individual to place their finger directly on a pointed member of the RE-100 apply pressure. The below photos show the applied pressure to the RE-100's pointed member.

46. I understand that Mr. Leinsing has challenged the validity of Genotek's U.S. Patent No. 10,619,187 (the '187 patent) over a combination of references, including U.S. Patent No. 5,643,767 to Fischetti et al, in the district court litigation between Genotek and Spectrum.[23] I understand that Mr. Leinsing's invalidity argument in the district court litigation relied on an embodiment in Fischetti that requires a pointed member to pierce a membrane.[24] I further understand that Mr. Leinsing testified that the pointed members would need to extend beyond the top of the Fischetti cap to pierce the seal. The pointed member in that case is therefore exposed to the user. In contrast, the knife in Plante is carefully positioned within the tube of Plante.[25] Therefore, a device such as Fischetti presents a much higher risk to the user than Plante's device.

47. I also understand that Mr. Leinsing is the only named inventor of U.S. Patent Application Publication 2003/0153895 ('895 Publication), which he filed February 8, 2002.[26] The '895 Publication is directed to a vial adapter. The vial

---

[23] Ex. 2010; Ex. 2026 at p. 94-143.

[24] Ex. 2026 at ¶ 295.

[25] Ex. 1003 at [0035].

[26] Ex. 2009 at Cover Page.

adapter has "a sharp cannula for piercing a vial closure."[27] The vial closure has an opening, called an access port.[28] A pierceable rubber stopper is placed in the opening.[29] The sharp cannula is inserted into an access port to pierce the rubber stopper and establish fluid connection with the interior of the vial.[30] Figure 1 in the '895 Publication shows the sharpened cannula 33:

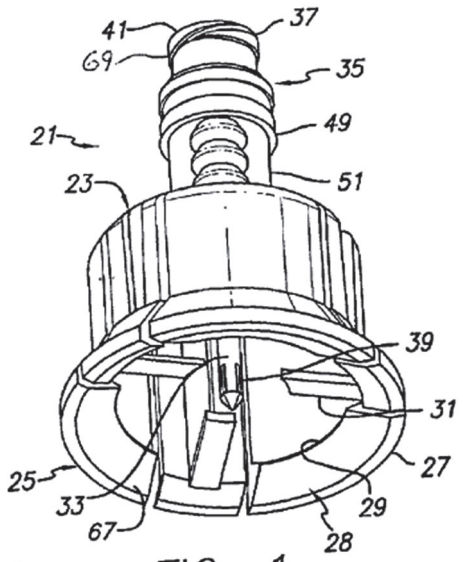

FIG. 1

48. The '895 Publication also describes a shroud that protects the user of the vial adapter from injury from the sharp cannula. The '895 Publication explains

[27] *Id.* at [0001].

[28] Ex. 2009 at [0002]; [0041].

[29] *Id.*

[30] *Id.*

that "sharpened cannula 33 is disposed within the protective shroud 27 which is at least as long as the sharpened cannula 33 and surrounds the cannula to protect an operator of the adapter 21 from being punctured by the sharpened tip of the cannula 33."[31] Figure 15 in the '895 Publication shows the protective shroud 27:

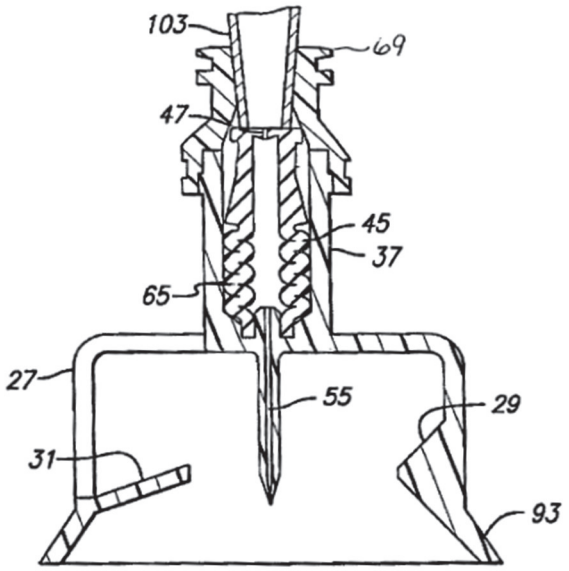

FIG. 15

49. Plante's device has even more engineering controls than the device depicted in the '895 Publication. Plante has a piercing member that is similarly disposed within a protective shroud. The piercing member in Plante is positioned closer to the sidewall of the device than the sharp cannula in the '895 Publication. The piercing member is also more recessed in the device of Plante than the sharp

[31] *Id.* at [0039].

cannula is in the ’895 Publication. Figure 1 of Plante shows the piercing member 19:

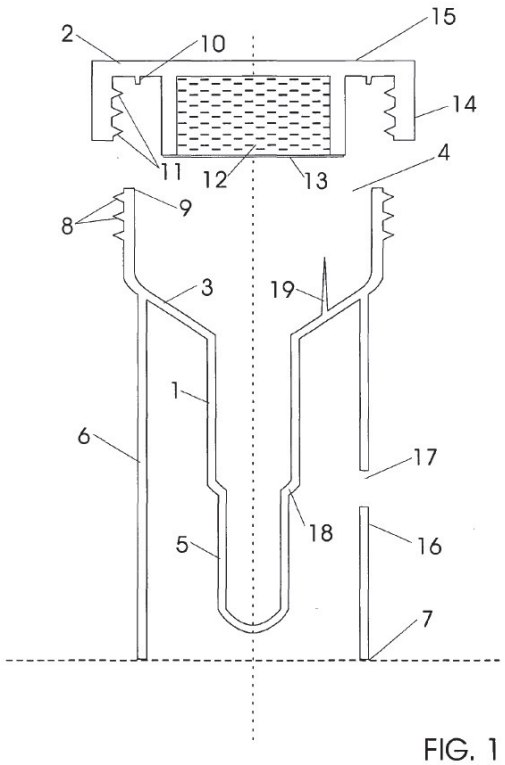

50. In my opinion, POSA would understand Plante’s device as presenting less of a risk of injury to the user than the device in the ’895 Publication. The sharpness required to pierce a rubber stopper, such as the one in the ’895 Publication, is greater than the sharpness required to pierce a thin membrane, such as the one in Plante’s device.[32]

[32] *See* Ex. 1003 at [0035] (“The reservoir is comprised in part of one surface which may be pierced or otherwise compromised such as a thin-film membrane or foil.”)

51. Therefore, a POSA would not have been motivated to replace Plante's knife because a POSA would not have recognized that Plante's knife presented a risk of injury.

2. A POSA would not recognize molding as a difficulty for Plante's device

52. I understand Mr. Leinsing argues that a POSA would have been motivated to combine Plante and Cho because a POSA would have known it is difficult to mold sharp thin features.[33] I disagree with Mr. Leinsing. A POSA would not have been motivated to combine Plante and Cho because a POSA would understand that injection molding could be used to create pointed members.

53. Mr. Leinsing, for example, cites to Cho as a reference.[34] Cho describes a bottle that can contain two kinds of material in two separate spaces in a bottle.[35] Cho's device can cause the separate spaces to communicate with each other as necessary so that the two materials can be mixed to be used.[36] The

---

[33] Ex. 1002 at ¶ 72.

[34] *See, e.g.*, *id.* at ¶ 66.

[35] Ex. 1004 at Abstract, 1:3-6.

[36] *Id.* at 55:13-17.

invention makes it possible to mix two different kinds of materials in a single bottle.[37] Like Plante, Cho teaches injection molding to create its beverage caps.[38]

54. Mr. Leinsing relies on the embodiment of Cho depicted in Figure 43.[39] Cho's design is complicated. Cho includes several ratchet mechanisms to ensure that two cylinders turn in only one direction relative to the cap and bottle.[40] Many of the components of the ratchet mechanisms in Cho's device include jagged edges. Figure 43 shows examples of ratchet mechanisms 622a/632b and 622c/613.[41]

---

[37] *Id.*

[38] *See* Ex. 1003 at [0040], [0041]; Ex. 1004 at 22:10-15, 37:1-2, 54:23-29.

[39] Ex. 1002 at ¶ 70.

[40] Ex. 1004 at 6:7-10; *see also* 8:27-9:18; 10:3-21.

[41] Ex. 1004 at 48:15-49:33.

FIG. 43

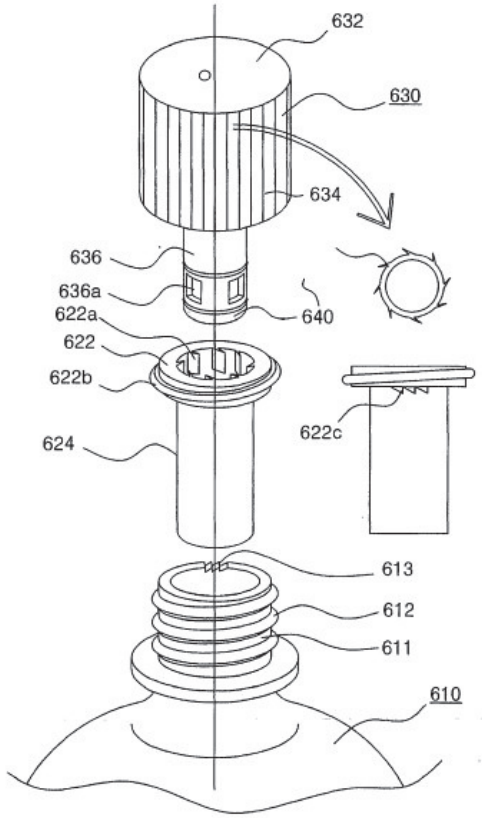

55. The close-up figures below show the sharp edges of rachet mechanism 622a/632b, which are depicted in Figure 43 in Cho.

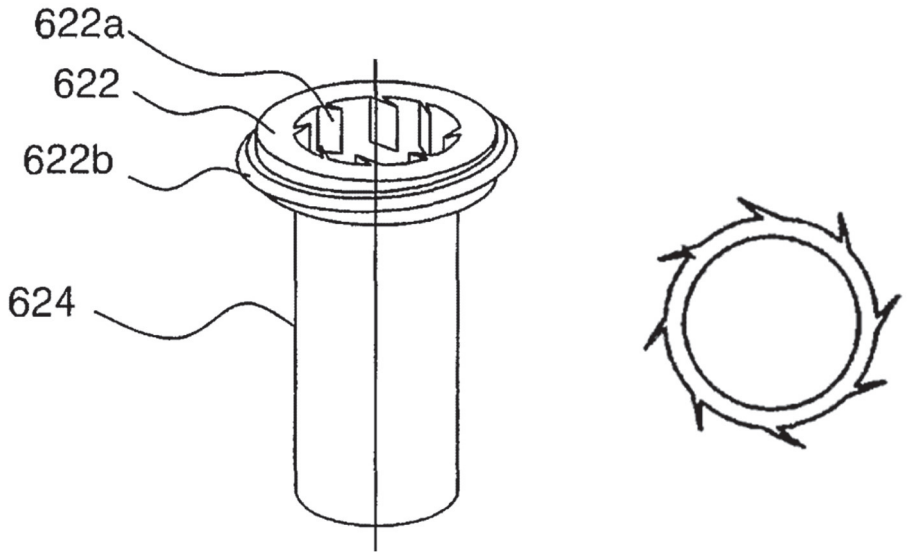

56. The close-up figures below show the sharp edges of rachet mechanism 622c/613, which are depicted in Figure 43 in Cho.

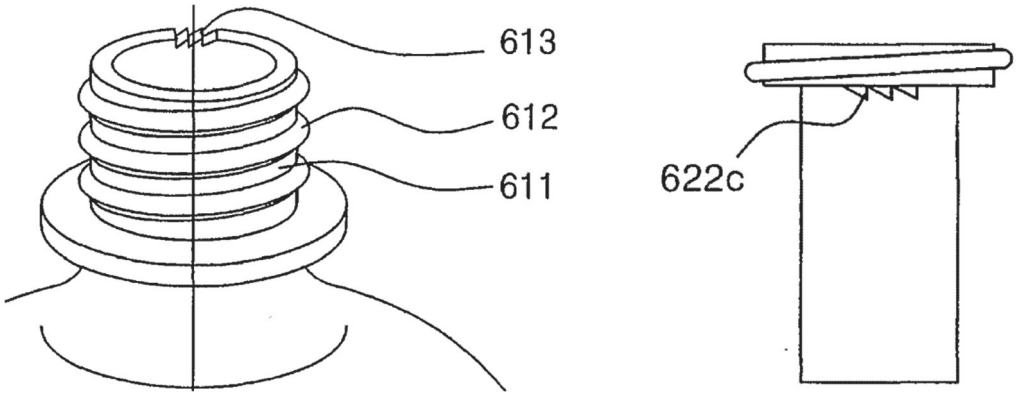

57. Therefore, as evidenced by Cho, a POSA would have understood that molding "sharp thin features" that were sharp enough to tear a thin membrane was not considered difficult at the time of the invention.

58. I also understand that Spectrum manufactured and sold the device of U.S. Provisional Patent Application No. 61/861,329 (the '329 Application) titled "Sample Collection Device" beginning in 2012.[42] The '329 Application describes a sample collection device having a sample tube, funnel, and cap.[43] The cap has a

[42] Ex. 2027 at Cover Page; Ex. 2028 at 1.

[43] Ex. 2028 at Abstract.

capsule and a piercing insert.[44] The capsule contains a stabilization solution.[45] The '329 Application describes a device that "can be used at home without clinical [*sic*] supervision for collecting a saliva sample and transporting the sample to an analysis location for DNA analysis."[46] The invention also relates to "sample collection devices useful for, e.g., in-home patient collection of human saliva for DNA analysis."[47]

59. Plante and '646 Patent are directed to sample collection devices that can be shipped for later processing.[48] Therefore, a POSA would consider the '329 Application's device to be in the same field as Plante and the '646 Patent.

60. Figure 1A in the '329 Application depicts the components of the device, including the sample tube (100 and 700), funnel (200), and cap (300)

---

[44] *Id.*

[45] *Id.*

[46] *Id.*

[47] *See id.* at [0005] ("The invention relates to sample collection devices useful for, e.g., in-home patient collection of human saliva for DNA analysis."); *see also* [0018].

[48] *See* Ex. 1003 at [0035], [0041]; Ex. 1001 at 2:51-61; 3:60-4:15.

having a capsule (400 and 500) and a piercing insert (600).[49] Figure 1A shows these components:

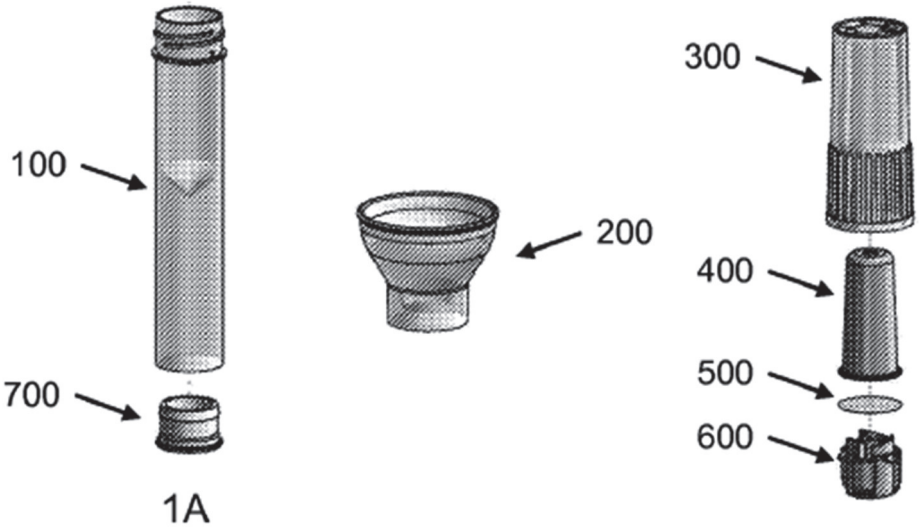

61. The ’329 Application explains that after a user places the sample in tube 100, the funnel 200 is removed and the 300 is screwed onto the tube.[50] Once cap 300 is screwed onto tube 100, “the piercing device [600] is moved towards the capsule [400] and contacts the seal [500],” resulting in piercing device 600 piercing seal 500.[51]

[49] Ex. 2028 at Fig. 1A.

[50] *Id.* at [0022].

[51] *Id.*

62. Figure 6 of the ’329 Application (below) shows a piercing insert 600.[52] The piercing insert has several piercing structures. The “piercing structures 611, 612, and 613 are configured to pierce the seal 500 once the cap is screwed onto the sample tube.”[53] The ’329 Application’s piercing seal 500 is manufactured from foil and has the following properties: “[1] ability to withstand corrosion by the stabilization fluid, [2] resistance to breakage during manufacture and transport to the user and before piercing by the piercing insert, and [3] ease of piercing by the piercing insert upon contact with force.”[54]

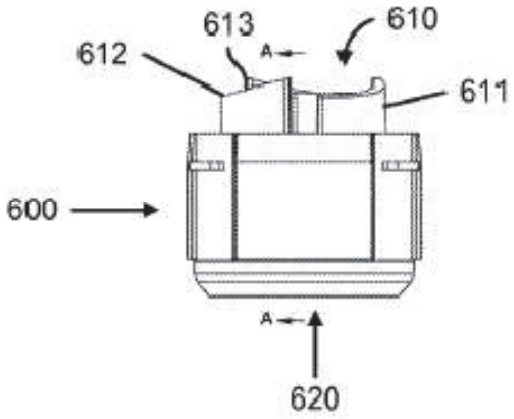

63. Plante’s membrane shares the same properties as the ’329 Application. Plante’s device has a thin membrane or foil that seals the reagent

[52] *Id.* at [0031].

[53] *Id.*

[54] *Id.* at [0029].

chamber in the cap before use.[55] When a user closes the cap onto the tube, Plante's knife punctures the thin membrane and releases fluid from the reagent chamber into the sample collection vessel to mix with a biological sample in the vessel.[56]

64. Therefore, a POSA would have known that the piercing members could be made from routine molding in a routine manufacturing process of a sample collection and preservation device. Indeed, the '329 Application does not describe a new molding method to create its device. Spectrum's own ability to manufacture a pointed member is further evidence that it was not difficult for a POSA to mold pointed members capable of puncturing a membrane.

C. A POSA would not substitute Cho's cap for Plante's cap

65. I understand that Mr. Leinsing argues that the combination of Plante and Cho involves the simple substitution of Plante's cap for Cho's cap to yield predictable results. I disagree with Mr. Leinsing. A POSA would understand that substituting Plante's cap for Cho's cap requires more than routine substitution.

1. Cho and Plante are not analogous art

66. A POSA would not substitute Cho's cap for Plante's cap because Cho and Plante are not analogous art.

---

[55] Ex. 1003 at [0019], [0035], [0039].

[56] *Id.*

67. Plante describes a saliva collection device. Plante's device has a cap and tube. Plante's cap has a reservoir that stores a preservative. Plante teaches that once the cap is fixed to the tube, the preservative is mixed with the biological sample. Upon closing the cap, a knife within the tube punctures the thin membrane or foil that seals the reservoir in the cap, thereby releasing fluid from the reservoir into the sample collection vessel to mix with a biological sample in the vessel. A liquid-tight seal is formed between the sealing cap and the receiving vessel.[57] The container is then shipped for later processing at a laboratory.[58]

68. Cho describes a bottle that can contain two kinds of material in two separate spaces in a bottle.[59] Cho's device can cause the separate spaces to communicate with each other as necessary so that the two materials can be mixed to be used.[60] Cho's device makes it possible to mix two different kinds of materials in a single bottle.[61]

---

[57] Ex. 1003 at [0035], [0038].

[58] Ex. 1003 at [0041].

[59] Ex. 1004 at Abstract, 1:3-6.

[60] *Id.* at 55:13-17.

[61] *Id.*

69. As explained above, Mr. Leinsing relies on the embodiment in Cho depicted in Figures 43-45B. In that embodiment, a user "rotates the opening unit" which causes the annular valve to open "so that the additive is discharged from the additive storage container."[62] Once the contents are mixed, the user again "rotates the opening unit" and causes the cap and annular valve to "rise up and [be] removed from the bottle."[63] Cho does not suggest that the user could store the mixture in the container for a prolonged period of time or ship the mixture between the steps of turning the cap and removing the cap. If the user did store the mixture in Cho, that storage would be inconsistent with Cho's stated advantages: "the present invention prevents the properties of the materials from being changed or deteriorated, which may occur when they are stored in a mixed state for a lengthy period."[64] This embodiment in Cho is shown below at Figure 45:

---

[62] *Id.*at 50:4-12.

[63] *Id.* at 50:16-27.

[64] *Id.* at 55:23-25.

FIG. 45B

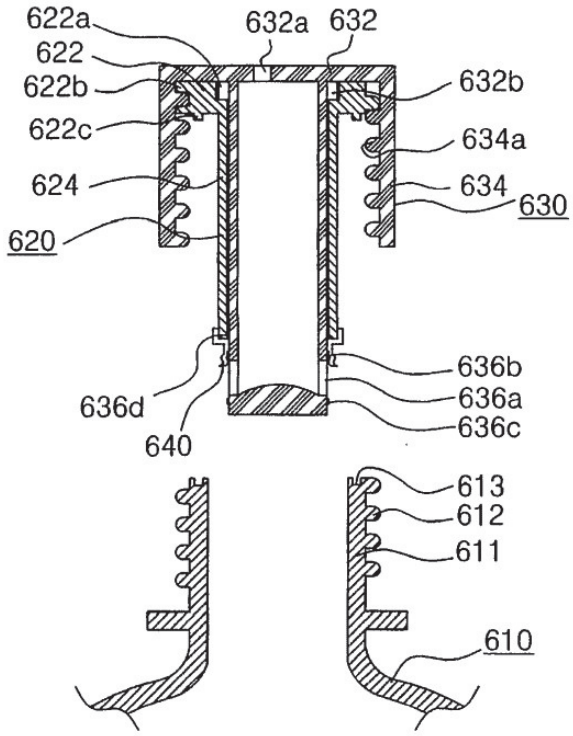

70. Unlike Plante and the '646 Patent,[65] Cho does not teach a fluid-tight interaction between its cap and bottle. Since Cho does not teach storage of the mixture, there is no reason to suspect the circular plate component is configured with the unnecessary function of a fluid-tight seal. Cho provides detail when a fluid-tight seal does exist between its components. For example, Cho explains the "[r]ing-type seal protrusions 636b and 636c formed around the circumferential surface" of the inner cylinder below the discharge port 636a "thus preventing

[65] Ex. 1003 at [0035], [0038]; Ex. 1001 at Claim 1.

additive from leaking through the discharge ports 636a."[66] There is no similar mention of a fluid-tight seal created by the circular plate and the bottle of Figures 43-45B.

71. Cho has no need for a fluid-tight seal between the cap and bottle and does not provide any detail that suggests otherwise. As shown in Figure 43 below, Cho's ratchet mechanism includes a saw tooth design on the bottle which matches to a corresponding sawtooth on the outer cylinder.

72. When the cap is tightened around the bottle, these saw tooth components are pushed in one direction, meaning one side of each "tooth" is squeezed while another side is opened. This means that the cap does not have a fluid-tight seal between the cap and bottle. The series of schematics below illustrate the saw tooth components approaching and interacting with each other. This design requires highly precise molding so that the two portions will properly align and couple. Once coupled, there is only force between two faces and thereby sealing the pair of faces, but another pair of faces are not forced together and will remain unsealed. This presents a risk of leakage, rendering Cho's solution inappropriate for long-term storage or shipping. These different variations are shown below. Each presents a risk of leakage.

---

[66] Ex. 1004, 49:16-21

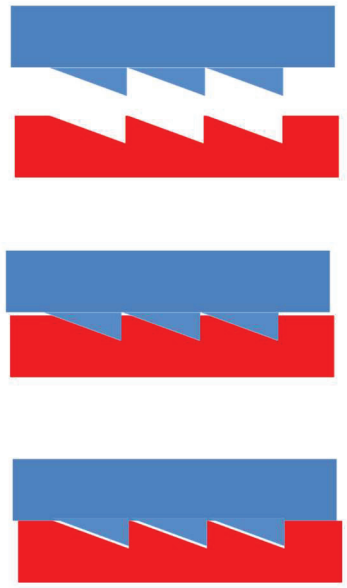

73. The ’646 Patent and Plante are solving a different problem than Cho. Where Cho’s device is for immediate use of the mixture and is not concerned with long-term storage and shipment, the ’646 Patent and Plante mix the ingredients and provide a container for long-term storage and shipment.[67]

74. Therefore, a POSA would not substitute Plante’s cap with Cho’s cap because Plante and Cho are not analogous arts.

[67] *See* Ex. 1003 at [0035], [0041]; Ex. 1001 at 2:51-61; 3:60-4:15.

2. Cho's cap does not provide the same functions as Plante's cap

75. I understand that Mr. Leinsing argues that the combination of Plante's cap with Cho's cap would involve no more than routine substitution.[68] I disagree with Mr. Leinsing. It is my opinion that substituting Plante's cap for Cho's cap would require considerably more than routine substitution because Cho's cap does not provide the same functionality as Plante's cap.

76. As explained above, Plante describes a saliva collection device.[69] Plante's device has a cap and tube.[70] Plante's tube collects a biological sample from a user.[71] Plante teaches that once the cap is fixed to the tube, the preservative is mixed with the biological sample.[72]

77. As explained above, Cho describes a bottle that can contain two kinds of material in two separate spaces in a bottle.[73] Cho's device can cause the separate spaces to communicate with each other as necessary so that the two

---

[68] Ex. 1002 at ¶¶ 75-76.

[69] Ex. 1003 at Abstract.

[70] Ex. 1003 at [0035].

[71] Ex. 1003 at [0035].

[72] Ex. 1003 at [0035].

[73] Ex. 1004 at Abstract, 1:3-6.

materials can be mixed to be used.[74] Cho's device makes it possible to mix two different kinds of materials in a single bottle.[75] Cho is designed for immediate consumption.[76]

78. Plante's cap has several functions that Cho's cap does not provide. Plante teaches a saliva collection device. Cho teaches a mixing bottle whose contents are immediately consumed. As Plante explains, containers are designed to function with a specific purpose in mind: "Container arts and engineering presently enjoys an advanced state whereby container design and function is configured for particular purpose."[77]

79. First, one function of Plante's device is that the container must be "suitable for safe transmission of biological matter via the mails and private

---

[74] *Id.* at 55:13-17.

[75] *Id.*

[76] *Id.* at 1: 8-12 ("It is, however, often necessary to mix two kinds of different materials together in a variety of industrial fields. For example, a coffee-based beverage may be mixed with sugar or cream powder therein; medicines and chemicals are similar cases.")

[77] Ex. 1003, at [0004].

delivery services."[78] Plante also teaches the long-term storage function is met by a liquid tight seal between the tube and the cap: "A receiving vessel and sealing cap which couple together . . . [to] form a liquid tight containment cavity suitable for long-term and durable storage of a DNA in a saliva sample."[79] Unlike Plante, Cho is not suitable for transport. Cho does not suggest that its device creates a fluid tight seal once the components are mixed.

80. Second, another function of Plante's device is to create a two-way packaging system.[80] Figure 4 (below) shows Plante's packaging system.[81] Plante's device is first shipped to the user with the cap 44 and tube 46 packaged

---

[78] Ex. 1003 at [0006]; *see also id.*, Abstract ("Saliva sample collection systems are configured with special attention to . . . safe transport and delivery by a conventional delivery services such as Federal Express.").

[79] *Id.* at [0018]; *see also id.*, [0022] ("When a cap element is coupled to a receiving vessel . . . forming a seal between the receiving vessel and the sealing cap such that no liquid can escape containment."); [0035] (describing an important function as "forming a liquid tight seal between the cap element and the receiving vessel element.").

[80] *Id.* at [0042].

[81] *Id.* at Fig. 4.

separately from one another.[82] The cap and tube reside in their respective cavities 43 and 45 when shipped.[83] To use the device, the user removes the cap 44 and tube 46 from the packaging, deposits their saliva sample, and then couples the cap and tube to mix preservative with saliva.[84] At this point, the cap and tube are one sealed container.[85] The user then places the sealed container within cavity 47 and ships the container to a laboratory for processing.[86]

---

[82] *Id.* at [0042].

[83] *Id.*

[84] *Id.*

[85] *Id.*

[86] *Id.*

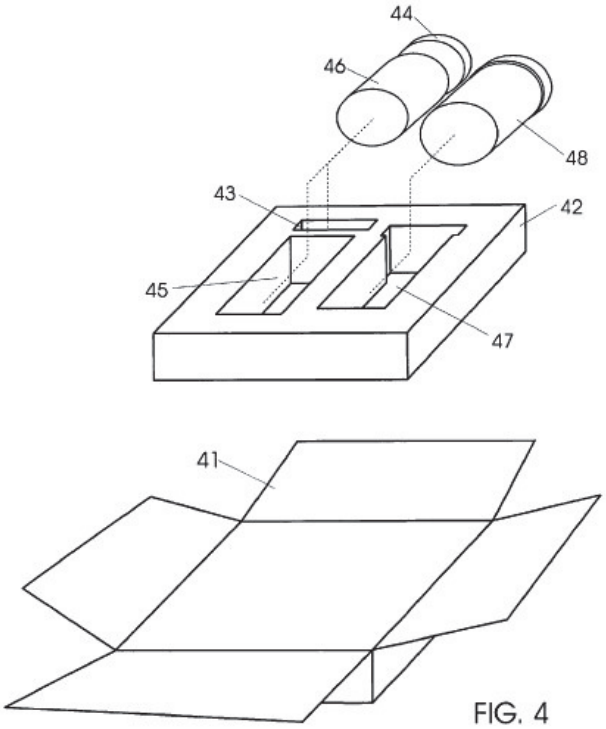

FIG. 4

81. Substituting Plante's cap with Cho's cap would require a change in Plante's packaging. Plante's two-way packaging solution as depicted in Figure 4 is feasible because Plante's cap has a low profile. The space needed for the cavities housing the cap and tube when shipped to the user, cavities 43 and 45, is not significantly bigger than the space needed for the cavity housing the sealed container after use, cavity 47. If Plante's cap is substituted for Cho's cap, the space needed to ship Cho's cap with Plante's container would be significantly greater. Cho's cap has a large profile. Adding Cho's cap would increase the width of Plante's packaging by 50% because a third cavity of similar size would be

needed for the cap when the package is shipped to the user. Figure 43 shows Cho's cap:[87]

FIG. 43

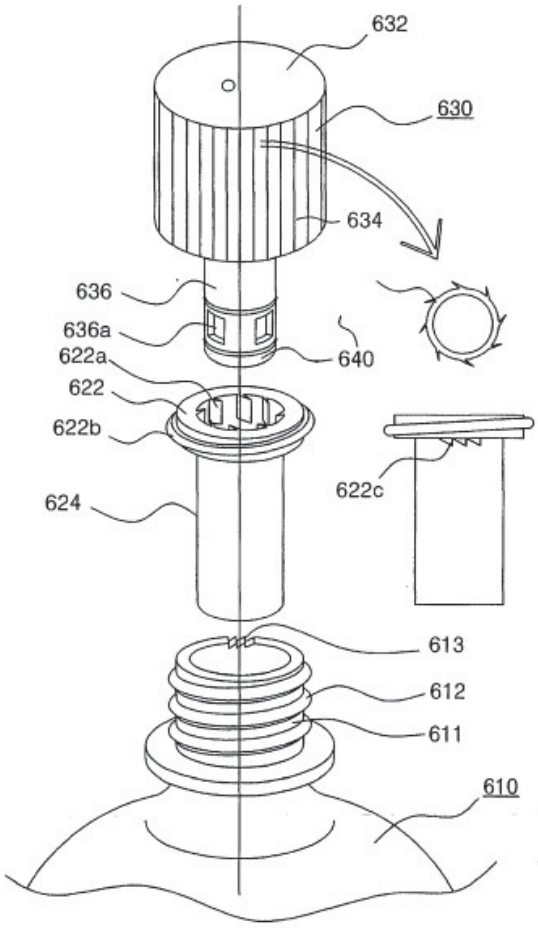

82. Third, one function of Plante is to provide an easy-to-use saliva collection device to unskilled users.[88] Plante explains that "[i]t is also an objective

[87] Ex. 1004 at Fig. 43.

[88] *See id.* at Abstract; [0041].

to provide systems of reduced parts and increased ease of use for improved reliability."[89] Substituting Plante's cap with Cho's cap would increase the number of parts required. This increases the complexity of the device and reduces its reliability.

83. Mr. Leinsing identified different parts of Cho and Plante with his own coloring scheme.[90] Plante's and Cho's caps are pictured side-by-side below. Plante's cap (left) has two distinct parts—the cap (blue) and the thin membrane (red) which covers the reservoir. Plante teaches the seal 10 and the walls of reservoir 12 can be molded with the cap as one part.[91] Cho's cap (right) has three distinct parts—the cap (blue)/the inner cylinder (orange), the outer cylinder (burgundy), and the bursting film (no color, labeled 640). Cho teaches that the inner cylinder can be molded together with the cap as one part.[92]

---

[89] Ex. 1003 at [0028]; *see also* [0006] ("[C]ontainers which effectively capture a sample with a minimal amount of steps and a minimal number of parts is a great benefit with respect to system success").

[90] *See, e.g.*, Ex. 1002 at ¶¶ 28, 41.

[91] Ex. 1003 at [0038], [0041].

[92] Ex. 1004, 51:22-26.

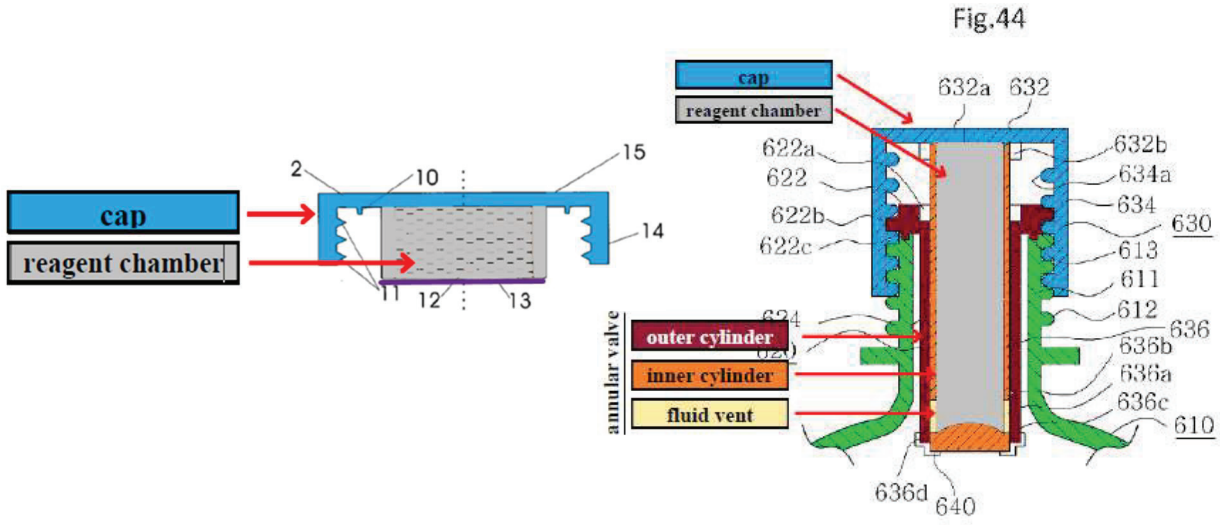

84. Cho's cap has many sub-parts. As depicted in Figure 43 (the relevant portion reproduced below), the outer cylinder of Cho's cap has an upper ratchet mechanism 622c that engages with an upper ratchet mechanism 613 on a bottle. This is designed "so that the additive storage container 620 is allowed to rotate only in one direction relative to the mouth 611."[93] Cho's outer cylinder also includes a lower ratchet plate 622a and the cap includes an upper ratchet plate that interfere "so that the opening unit 630 is allowed to rotate in only one direction relative to the additive storage container 620."[94]

---

[93] Ex. 1004 at 49:1-5.

[94] *Id.* at 49:28-33.

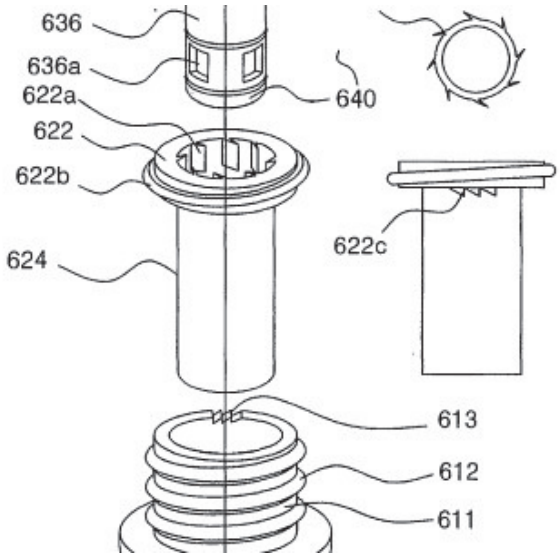

85. Cho's cap also has an "open port 632a." The "open port 632a" allows beverage additives to be loaded into the inner cylinder.[95] Once the beverage additive is loaded into the inner cylinder, the open port 632a is "sealed with a separate sealing means."[96] The seal can be "[a]n aluminum plate or a thin synthetic resin film."[97]

---

[95] *Id.* at 49:34-35.

[96] *Id.* at 49:35–50:2.

[97] *Id.* at 50:2-3.

FIG. 44

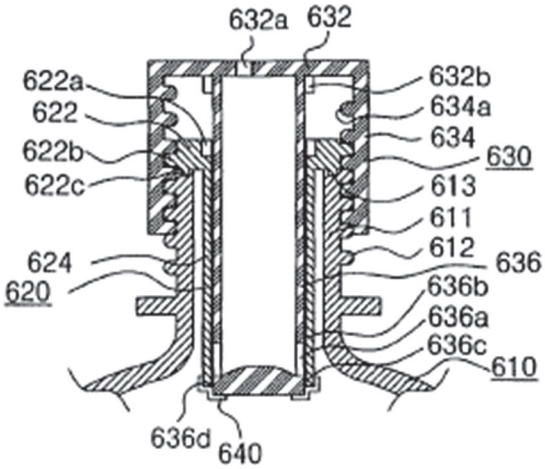

86. Therefore, substituting Cho's cap for Plante's cap adds a number of additional parts and reduces reliability of the saliva collection device.

87. Finally, one of the functions of Plante's device is to avoid failure mechanisms. Plante explains that "[i]n home collection systems, the container . . . must be devoid of failure mechanisms which tend to render collection of a sample defective."[98] As I discuss below, substituting Plante's cap with Cho's cap introduces a failure mechanism that significantly increases the risk of sample contamination, which would render a sample defective and not suitable for the device's purpose. Thus, this substitution frustrates Plante's objective in avoiding failure mechanisms.

[98] Ex. 1003 at [0006].

88. Therefore, a POSA would not substitute Plante's cap with Cho's cap because the Cho's cap has a different functionality than Plante's cap.

3. A POSA would not have a reasonable expectation of success substituting Plante's cap with Cho's cap

89. I understand that Mr. Leinsing argues that a POSA would have a reasonable expectation of success substituting Plante's cap with Cho's cap. I disagree with Mr. Leinsing. It is my opinion that a POSA would not have a reasonable expectation of success substituting Plante's cap with Cho's cap.

90. First, a POSA would not have a reasonable expectation of success in substituting Plante's cap with Cho's cap because the substitution increases the risk of sample contamination.

91. Plante's cap is designed to minimize contamination. As I have explained above, Plante's device has a preservative reservoir (reagent chamber) in the cap. A thin film seals the preservative within the reservoir. As shown in Figure 1 of Plante (below), Plante's reservoir protrudes only slightly beyond Plante's cap.[99] This significantly reduces the risk that an individual would touch the film, which I understand from Dr. Metzker could render the sample defective. This is also consistent with Plante's objective to avoid failing mechanisms.[100]

---

[99] Ex. 1003 at Fig. 1.

[100] *Id.* at [0006].

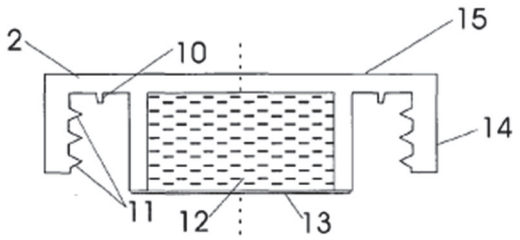

92. In contrast, Cho's cap would increase the risk of contamination. The Cho embodiment Mr. Leinsing relies on for his combination has an annular valve.[101] As seen in Figure 44 below, Cho's annular valve protrudes significantly beyond the bottom of Cho's cap.[102] This increases the risk that an individual touches the interior of the device, which I understand from Dr. Metzker could render the sample defective. Cho's annular valve also resembles a handle, which suggests a natural interaction point for a user.

[101] Ex. 1004 at 20:29-34; 48:27-31; Figs. 44-45B.

[102] Ex. 1004 at Fig. 44.

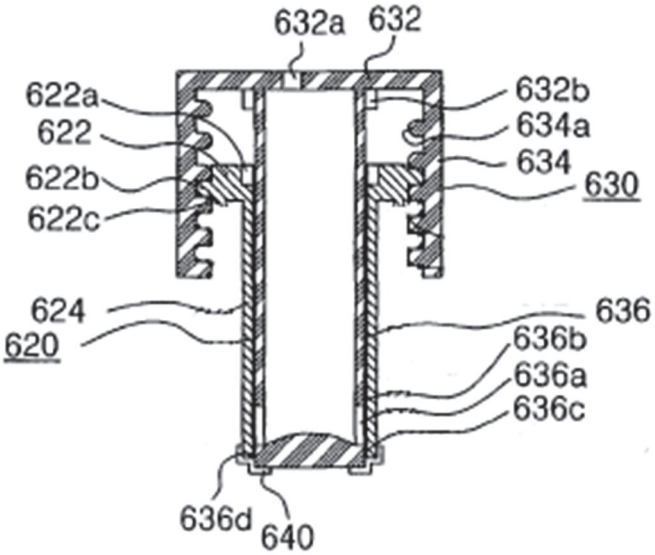

93. Therefore, a POSA would not have a reasonable expectation of success in substituting Plante's cap with Cho's cap because the substitution increases the risk of sample contamination, which would render a sample defective.

94. Second, a POSA would not have a reasonable expectation of success in substituting Plante's cap with Cho's cap because Cho's cap would not fit in Plante's receiving vessel.

95. Plante's cap has threads that engage with the opening of its receiving vessel.[103] Cho's cap has threads that engage with the opening of its container.[104] A POSA would be required to scale Cho's cap so that its threads could engage with

[103] Ex. 1003 at [0018].

[104] Ex. 1004 at 2:7-17.

Plante's receiving vessel. I scaled the threads on Cho's cap to engage with the threads on Plante's receiving vessel. Below is an overlay of Cho's cap and Plante's cap, scaled so that the threads on Cho's cap will engage with Plante's receiving vessel.

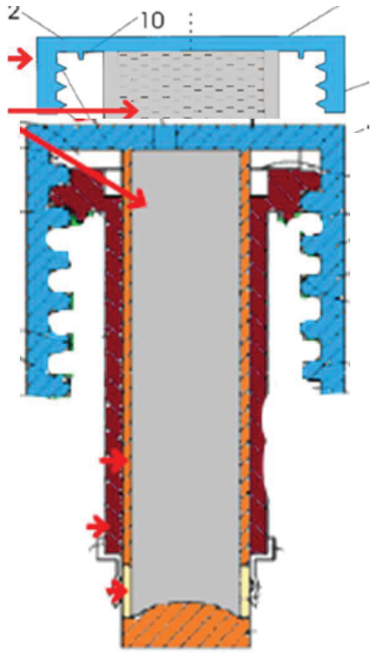

96. This substitution results in a cap that is longer than the original Plante design. This additional length would prevent a user from inserting the cap into Plante's receiving vessel after the user deposits the saliva sample. As shown in Plante's original design below, there is little separation between the bottom of the preservative reservoir and the funnel portion of the tube when the cap and tube are coupled.[105]

[105] *See* Ex. 1003 at Fig. 1.

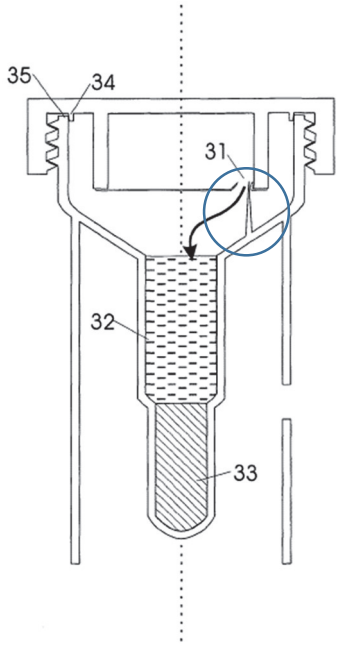

FIG. 3

97. Substituting Cho's cap for Plante's cap would prevent Cho's cap from operating properly. Figure 1 from Plante[106] on the left below includes Cho's cap, which I scaled to correspond to the size of Plante's receiving vessel's mouth. On the left, Cho's cap is separated from Plante's receiving vessel to show the relative dimensions. On the right, Cho's cap has replaced Plante's cap in the Plante device. The bottom threads on Cho's cap on the right have engaged the threads on Plante's receiving vessel.

[106] I excerpted these figures from the Petition Pages 6 (the Plante cap and receiving vessel) and 7 (the Cho cap).

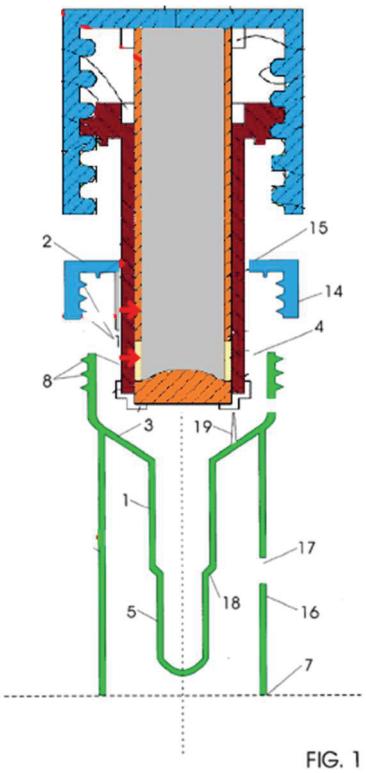

FIG. 1

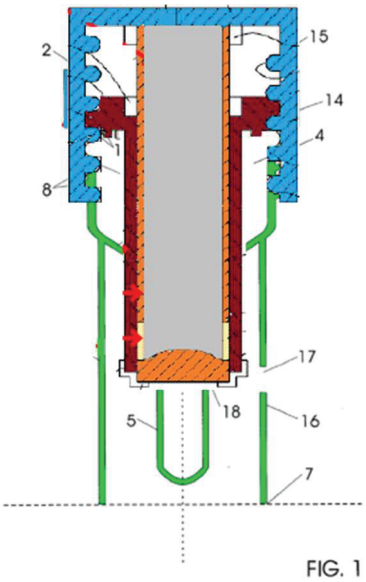

FIG. 1

98. From the figures above alone, it is clear that Cho's cap does not fit into Plante's receiving vessel. At this point, Plante's receiving vessel has not yet engaged Cho's outer cylinder in the cap in either of the figures of above. Engaging the outer cylinder is necessary to actuate the release mechanism and discharge the preservative in the reservoir.[107] Therefore, for the device to operate properly, Cho's cap will ultimately need to move even further downwards to allow the outer cylinder to engage the top of Plante's receiving vessel to begin Cho's release mechanism.

[107] Ex. 1004 at 50:4-15; Fig. 44.

99. I also created the figure below, which shows Cho's cap on Plante's receiving vessel after the vessel has engaged Cho's outer cylinder and actuated the release mechanism. The inner cylinder located in the bottom of Cho's cap has a "bursting film" to release the contents within the chamber.[108] As shown in the figure below, engaging Cho's outer cylinder has caused Cho's cap to extend completely to the depth of the Plante receiving vessel. This leaves little to no room for the sample in the Plante receiving vessel. Therefore, a POSA would not have a reasonable expectation of success of substituting Plante's cap with Cho's cap because the device would not operate properly.

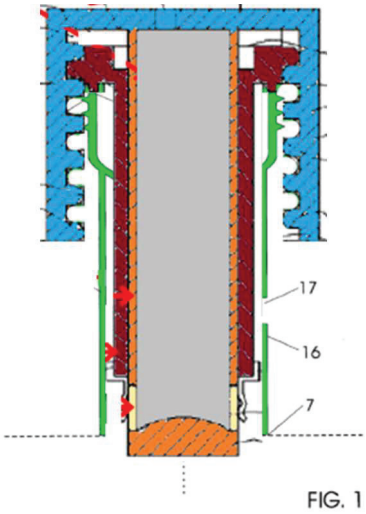

100. Therefore, a POSA would not have a reasonable expectation of success fitting Cho's modified cap into Plante's receiving vessel.

[108] Ex. 1004 at 49:22-27; 50:4-15.

* * *

I declare that all statements made herein of my own knowledge are true and that all statements made on information and belief are believed to be true, and that these statements were made with knowledge that willful false statements and the like so made are punishable by fine or imprisonment, or both, under section 1001 of Title 18 of the United States Code.

Dated: May 9, 2023

Dr. Steven Wereley

STEVEN T. WERELEY, PH.D.
Professor, Mechanical Engineering
Birck Nanotechnology Center
Purdue University
Phone: (765) 494-5624
wereley@purdue.edu
https://engineering.purdue.edu/~wereley/

Mailing/Physical Addresses

Birck Nanotechnology Center, Room 2019 1205 West State Street West Lafayette, IN 47907-1205 Fax: (765) 496-6443	Mechanical Engineering, Room 1077 585 Purdue Mall West Lafayette, IN 47907-2088 Fax: (765) 494-0539

Research Interests

Micro and Nanoscale fluid mechanics (*microfluidics*), MEMS, bio-MEMS, biological flows at the cellular level, micro-scale laminar mixing, physiological sensors, electrical and optical manipulation of particles and fluids, development of microfluidic diagnostic techniques.

Education

Ph.D. Mechanical Engineering, Northwestern University, Evanston IL, 1997. Dissertation Topic: An investigation of the physics underlying rotating filtration using particle image velocimetry (PIV), computational particle tracking, and analytical methods.
M.S. Mechanical Engineering, Northwestern University, Evanston, IL, 1992. Thesis Topic: A laser Doppler velocimetry (LDV) investigation of the velocity profiles developed in the annulus between differentially rotating cylinders.
B.S. Mechanical Engineering, Washington University, St. Louis, MO, 1990. Concentration in fluid mechanics: incompressible flow, compressible flow, and computational fluid dynamics.
B.A. Physics, Lawrence University, Appleton, WI, 1990. Physics curriculum (mechanics, electricity and magnetism, electronics, optics, quantum mechanics, experimental methods) combined in equal parts with liberal arts courses.

Work Experience

Professor, School of Mechanical Engineering, Purdue University (2010-Present). Taught Mechanical Engineering courses at the graduate and undergraduate levels and instructed graduate students in a lab setting.
Alexander von Humboldt Fellow, Universität der Bundeswehr, Munich, Germany, Sept.-Oct, 2014.
Associate Professor, School of Mechanical Engineering, Purdue University (2005-2010). Taught Mechanical Engineering courses at the graduate and undergraduate levels and instructed graduate students in a laboratory environment.
Alexander von Humboldt Fellow, Universität der Bundeswehr, Munich, Germany, June-July 2009.
Alexander von Humboldt Fellow, Technische Universität Darmstadt, Darmstadt, Germany, Mar.-Aug., 2007.
Assistant Professor, School of Mechanical Engineering, Purdue University (1999-2005). Taught Mechanical Engineering courses at the graduate and undergraduate levels and instructed graduate students in a laboratory environment.
Post Doctoral Research Scientist, Mechanical and Environmental Engineering Dept., University of California Santa Barbara (1997-1999). Designed and constructed microfluidics experiments and developed custom particle image velocimetry algorithms specifically tailored to microfluidics applications.

Currently Active Consulting Areas

Fluid mechanics measurements using particle image velocimetry (PIV) and other techniques
Fluid mechanics measurements in Microelectromechanical Systems (MEMS), bio-MEMS, and microscopic biological systems using micro-particle image velocimetry (μPIV) and related techniques
Oil spills, oil flows, other fluid spills; Custom-written PIV software and routines
Expert witness services for fluid mechanics, microfluidics, bio fluid mechanics, MEMS, bio-MEMS, and oil spill issues

Last updated: 25 January 2023

Books (Monographs)

M. Raffel, C. Willert, S. Wereley, J. Kompenhans, Particle Image Velocimetry: A Practical Guide, 3rd ed., Springer, New York (2018). (ISBN 978-3-319-68851-0; https://doi.org/10.1007/978-3-319-68852-7t)

N.T. Nguyen, S.T. Wereley and M. Shaegh, Fundamentals and Applications of Microfluidics, Artech House, Boston, (1st ed. 2002; 2nd ed. 2006; 3rd ed. 2019). (ISBN 978-1-58053-972-2)

Books (Edited Collections)

B. Bhusan (Wereley, section editor), Encyclopedia of Nanotechnology, Springer, New York, 2012. (ISBN: 978-90-481-9750-7)

CH Ahn, M Gijs, S Hardt, SG Kandlikar, JP Landers, Y Lin, A De Mello, H Morgan, NF de Rooij, ST Wereley, and RJ Yang (section eds), Encyclopedia of Microfluidics and Nanofluidics (ed-in-chief Dongqing Li), Springer, New York (2008).

R. Bashir and S.T. Wereley (vol. eds), BioMEMS and Biomedical Nanotechnology (series ed M. Ferrari): Vol. 4: Biomolecular Sensing, Processing and Analysis, Kluwer, Boston (2007). (ISBN 978-0387255668)

Book Chapters

14. **C Snoeyink and ST Wereley**, "Micro/nano flow characterization techniques," in Handbook of Nanotechnology (Springer, 2012).
13. **HS Chuang, A Kumar, SJ Williams, ST Wereley**, "Optoelectrically-enabled multiscale manipulation," in Handbook of Nanotechnology (Springer, 2012).
12. **JS Kwon, R Thakur and ST Wereley**, "Rapid electrokinetic patterning," in Handbook of Nanotechnology (Springer, 2012).
11. **CD Meinhart and ST Wereley**, "Micro Particle Velocimetry," Chapt. 7 in Micro/Nano Technology Systems for Bio-medical Applications-Microfluidics, Optics and Surface Chemistry, (ed. Chih-Ming Ho), Oxford University Press, Oxford UK (2010). ISBN13: 978-0-19-921969-8; ISBN10: 0-19-921969-9
10. **HS Chuang, A Kumar, ST Wereley**, "Optical flow characterization- micro particle image velocimetry (μPIV)," in Methods in Bioengineering: Microfabrication and Microfluidics (eds Lee and Zahn), Artech House, Boston (2009). ISBN 978-1-59693-401-6
9. **A Kumar, AH Ewing, and ST Wereley**, "Optical tweezers for manipulating cells and particles", Encyclopedia of Microfluidics and Nanofluidics (ed. Dongqing Li), Springer, New York (2008).
8. **P Chamarthy, A Kumar, J Cao, and ST Wereley**, "Fundamentals of Diffusion in microfluidic systems", Encyclopedia of Microfluidics and Nanofluidics (ed. Dongqing Li), Springer, New York (2008).
7. **P Chamarthy and ST Wereley**, "Micro-PIV-Based Diffusometry," Encyclopedia of Microfluidics and Nanofluidics (ed. Dongqing Li), Springer, New York (2008).
6. **J. Cao and S.T. Wereley**, "Micro-Particle Image Velocimetry in Biomedical Applications," in Encyclopedia of Biomaterials and Biomedical Engineering, 2nd edition, (eds G.E. Wnek and G.L. Bowlin), Informa Healthcare, New York (2008).
5. **I. Whitacre and S.T. Wereley**, "Particle Dynamics in a Dielectrophoretic Microdevice", in BioMEMS and Biomedical Nanotechnology (series ed M. Ferrari): Vol. 4: Biomolecular Sensing, Processing and Analysis (vol. eds R. Bashir and S.T. Wereley), Kluwer, Boston (2007).
4. **S.T. Wereley and C.D. Meinhart**, "Electrokinetics in Microdevices" in Complex Systems Science in BioMedicine, eds. Deisboeck, Kresh, Kepler, Kluwer, Boston (2006).
3. **S.Y. Lee, J. Jang, and S.T. Wereley**, "Optical Diagnostics to Investigate the Entrance Length in Microchannels," in MEMS Handbook, ed. Mohamed Gad-el-Hak, Springer, New York (2006).
2. **S.T. Wereley and C.D. Meinhart**, "Micron-Resolution Particle Image Velocimetry" in Micro- and Nano-Scale Diagnostic Techniques, ed. Kenny Breuer, Springer-Verlag, New York, (2005).
1. **C.D. Meinhart, S.T. Wereley, and J.G. Santiago**, "Micron-Resolution Velocimetry Techniques," Laser Techniques Applied to Fluid Mechanics, R. J. Adrian et al. (Eds.), Springer-Verlag, Berlin, pp. 57-70, (2000).

Journal Publications

95. **DH Lee, KN Clayton, TL Kinzer-Ursem, JC Linnes and ST Wereley**, "Quantifying Brownian motion in the presence of simple shear flow with particle diffusometry," Exp Fluids Vol. 64:26 (2023). https://doi.org/10.1007/s00348-022-03566-8

94. **DH Lee, EA Madsen, JC Linnes and ST Wereley**, "Temporally and spatially resolved micro-rheometry of a transient viscous polymer formation," Meas Sci Tech, Vol 34(3), pp 035301. (2023) https://doi.org/10.1088/1361-6501/aca993
93. **H Ma, ST Wereley, JC Linnes and TL Kinzer-Ursem**, "Measurement of Protein−Protein Interaction Dynamics Using Microfluidics and Particle Diffusometry," Anal. Chem., Vol 94 (45), 15655-15662. (2022) https://doi.org/10.1021/acs.analchem.2c02570
92. **B Soni, AK Nayak and ST Wereley**, "A novel approach to quantify ventilation heterogeneity in occluded bronchial tree based on lung admittance," Physics of Fluids, Vol 34, 043606 (2022). https://doi.org/10.1063/5.0085040
91. **AJ Colbert, D Lee, KN Clayton, ST Wereley, JC Linnes, TL Kinzer-Ursem**, "PD-LAMP smartphone detection of SARS-CoV-2 on chip," Analytica Chimica Acta, Vol. 1203, pp. 339702, 22 April 2022. https://doi.org/10.1016/j.aca.2022.339702
90. **AJ Colbert, K Co, G Lima-Cooper, D Lee, KN Clayton, ST Wereley, CC John, JC Linnes and TL Kinzer-Ursem**, "Towards the use of a smartphone imaging-based tool for point-of-care detection of asymptomatic low-density malaria parasitaemia," Malaria Journal, Vol 20, pp. 380, 2021. https://doi.org/10.1186/s12936-021-03894-w
89. **K Gupta, Z Chen, SJ Williams, and ST Wereley**, "Time-resolved particle image velocimetry analysis and computational modeling of transient optically induced electrothermal micro vortex," Electrophoresis, 2021. DOI 10.1002/elps.202100104
88. **P Karan, J Chakraborty, S Chakraborty, ST Wereley, and IC Christov**, "Profiling a soft solid layer to passively control the conduit shape in a compliant microchannel during flow," Phys. Rev. E, Vol. 104, 015108, 2021. https://doi.org/10.1103/PhysRevE.104.015108
87. **A Mishra, K Gupta, and ST Wereley**, "Nature of trapping forces in optically induced electrothermal vortex based tweezers," Phys. Rev. Fluids, 2021. DOI: 10.1103/PhysRevFluids.6.023701
86. **Choongbae Park and ST Wereley**, "Effects of laser light and AC signals on opto-electrohydrodynamic flow with twin microvortices: I. non-uniform AC electric fields," J. Micromechanics and Microengineering, Vol. 31, 025007, 2021. https://doi.org/10.1088/1361-6439/abceda
85. **AK Nayak, A Haque, B Weigand, and ST Wereley**, "Thermokinetic transport of dilatant/pseudoplastic fluids in a hydrophobic patterned micro-slit," Physics of Fluids Vol 32, 072002 (2020). https://doi.org/10.1063/5.0011716
84. **TJ Moehling, DH Lee, ME Henderson, MK McDonald, PH Tsang, S Kaakeh, ES Kim, ST Wereley, TL Kinzer-Ursem, KN Clayton, JC Linnes**, "A smartphone-based particle diffusometry platform for sub-attomolar detection of Vibrio cholerae in environmental water, Biosensors and Bioelectronics,Vol 167, pp 112497 (2020) https://doi.org/10.1016/j.bios.2020.112497
83. **X Pan, JS Kwon, JW Khor, SM Mehdi Shamsi, ST Wereley**, "Experimental and computational study of optically-driven electrothermal vortex," Prog. Comp. Fluid Dyn., Vol. 19, p. 307-315 (2019).
82. **X Kou, PWS Heng, LW Chan, ST Wereley, MT Carvajal**, "Effect of Roughness on the Dispersion of Dry Powders for Inhalation: a Dynamic Visualization Perspective," AAPS PharmSciTech, Vol. 20 (7), p. 271 (2019).
81. **W Ren, SI Mohammed, ST Wereley and J Irudayaraj**, "Magnetic Focus Lateral Flow Sensor for Detection of Cervical Cancer Biomarkers," Anal. Chem., Vol. 91, 2876−2884 (2019). http://dx.doi.org/10.1021/acs.analchem.8b04848
80. **KN Clayton, TJ Moehling, DH Lee, ST Wereley, JC Linnes, and TL Kinzer-Ursem**, "Particle Diffusometry: An Optical Detection Method for Vibrio cholerae Presence in Environmental Water Samples," Scientific Reports, Vol. 9, Article number: 1739 (2019). (2019) 9:1739 | https://doi.org/10.1038/s41598-018-38056-7
79. **SH Lee, JY Kim, ST Wereley, and JS Kwon**, "Light-actuated electrothermal microfluidic flow for micro-mixing," Journal of Micromechanics and Microengineering, Vol. 29, p. 017003. (2018) DOI: 10.1088/1361-6439/aaf0b1
78. **JC Ndukaife, Y Xuan, AGA Nnanna, AV Kildishev, VM Shalaev, ST Wereley, A Boltasseva**, ACS Nano, "High-Resolution Large-Ensemble Nanoparticles Trapping with Multifunctional Thermoplasmonic Nanohole Metasurface," Vol. 12, pp. 5376-84, 2018. DOI: 10.1021/acsnano.8b00318
77. **KN Clayton, GD Berglund, JC Linnes, TL Kinzer-Ursem, and ST Wereley**, "DNA Microviscosity Characterization with Particle Diffusometry for Downstream DNA Detection Applications," Analytical Chemistry, Vol. 89, pages 13334-13341, 2017. DOI: 10.1021/acs.analchem.7b03513

76. **KN Clayton, D Lee, ST Wereley and TL Kinzer-Ursem**, "Measuring biotherapeutic viscosity and degradation on-chip with particle diffusometry," Lab Chip, Vol. 17, pages 4148-4159, 2017. DOI: 10.1039/C7LC00507E
75. **X Kou, ST Wereley, PWS Heng, LW Chan, and MT Carvajal**, "Powder dispersion mechanisms within a dry powder inhaler using microscale particle image velocimetry," International Journal of Pharmaceutics, Vol. 514, pp. 445-455, 2016. https://doi.org/10.1016/j.ijpharm.2016.07.040
74. **A Mishra, TR Maltais, TM Walter, A Wei, SJ Williams and ST Wereley**, "Trapping and viability of swimming bacteria in an optoelectric trap," Lab Chip, Vol. 16, pp. 1039-1046, 2016. DOI: 10.1039/c5lc01559f
73. **JC Ndukaife, AV Kildishev, AGA Nnanna, VM Shalaev, ST Wereley, and A Boltasseva**. "Long-range and rapid transport of individual nano-objects by a hybrid electrothermoplasmonic nanotweezer," Nature Nanotechnology, Vol. 11, pages 53–59, 2016. doi:10.1038/nnano.2015.248
72. **A Mishra, JW Khor, KN Clayton, SJ Williams, XD Pan, T Kinzer-Ursem, ST Wereley**, "Optoelectric patterning: Effect of electrode material and thickness on laser-induced AC electrothermal flow," Electrophoresis, Vol. 37, pp. 658–665, 2016. DOI: 10.1002/elps.201500473
71. **ST Wereley, Y Zhang, JW Khor, and C Snoeyink**, "Single-acquisition wide-field super-resolution for telescopes," Appl. Opt. 55, 10025-10029 (2016)
70. **JS Kwon and ST Wereley**, "Light-actuated electrothermal microfluidic motion: experimental investigation and physical interpretation," Microfluidics and Nanofluidics, Vol 19, pp 609-619, 2015. DOI: 10.1007/s10404-015-1587-z
69. **R Thakur, AM Amin and ST Wereley**, "On-chip dilution in nanoliter droplets," Analyst Vol 140, pp 5855-5859, 2015. DOI: 10.1039/C4AN01829J
68. **A Mishra, V Kulkarni, JW Khor and ST Wereley**, "Mapping surface tension induced menisci with application to tensiometry and refractometry," Soft matter, Vol 11, pp 5619-5623, 2015. DOI: 10.1039/C5SM00497G
67. **JC Ndukaife, A Mishra, U Guler, AGA Nnanna, ST Wereley, and A Boltasseva**, "Photothermal Heating Enabled by Plasmonic Nanostructures for Electrokinetic Manipulation and Sorting of Particles," ACS Nano, Vol. 8, pp 9035–9043, 2014. http://dx.doi.org/10.1021/nn502294w
66. **A Mishra, JS Kwon, R Thakur, and ST Wereley**, "Optoelectrical microfluidics as a promising tool in biology," Trends in Biotechnology, Vol 32, pp 414–421, 2014. DOI: http://dx.doi.org/10.1016/j.tibtech.2014.06.002 [selected as cover article]
65. **C Snoeyink, ST Wereley**, "A novel 3D3C particle tracking method suitable for microfluidic flow measurements," Exp Fluids Vol. 54, pp. 1453 (2013). DOI: 10.1007/s00348-012-1453-7
64. **JS Kwon, ST Wereley**, "Towards New Methodologies for Manipulation of Colloidal Particles in a Miniaturized Fluidic Device: Optoelectrokinetic Manipulation Technique," J. Fluids Eng., Vol. 135 (2), 2013. doi:10.1115/1.4023451
63. **AM Amin, R Thakur, S Madren, HS Chuang, M Thottethodi, TN Vijaykumar, ST Wereley, and SC Jacobson**, "Software-programmable continuous-flow multi-purpose lab-on-a-chip," Microfluidics and Nanofluidics, 2013. DOI 10.1007/s10404-013-1180-2
62. **C Snoeyink and ST Wereley**, "Single Image Far Field Sub-Diffraction Limit Imaging with Axicon," Optics Letters, Vol. 38, pp. 625–627, 2013. DOI 10.1364/OL.38.000625
selected for publication in Virtual Journal for Biomedical Optics, Vol. 8, Iss. 4, Page 625.
61. **CB Park and ST Wereley**, "Rapid generation and manipulation of microfluidics vortex flows induced by AC electrokinetics with optical illumination," Lab on a Chip, Vol. 13, pp. 1289-1294, 2013. DOI: 10.1039/c3lc41021h [designated *HOT* article by editor]
60. **SH Lee, DJ Lee, CK Lee, YH Lee, ST Wereley, JH Oh**, "Direct fabrication of microelectrodes on a polymer substrate using selective ultrashort pulsed laser ablation of inkjet-printed Ag lines," Physica Status Solidi, Vol, 209, 2012. DOI: 10.1002/pssa.201228269
59. **Z Huang, ES McLamore, HS Chuang, W. Zhang, ST Wereley, JLC Leon, and MK Banks**, "Shear-induced detachment of biofilms from hollow fiber silicone membranes," Biotechnology and Bioengineering, Vol. 110, 2012. DOI: 10.1002/bit.24631
58. **JS Kwon SP Ravindranath A Kumar J Irudayaraj and ST Wereley**," Opto-electrokinetic manipulation for high-performance on-chip bioassays," Lab on a Chip, Vol. 12, 2012. DOI: 10.1039/c2lc40662d [cover article] [designated Top 10% by journal]
57. **HS Chuang, LC Gui, ST Wereley**, "Nano-resolution flow measurement based on single pixel evaluation PIV," Microfluidics and Nanofluidics, Vol. 13, 2012. DOI 10.1007/s10404-012-0939-1

56. **HS Chuang, R Thakur and ST Wereley**, "Characterizations of gas purge valves for liquid alignment and gas removal in a microfluidic chip", Journal of Micromechanics and Microengineering, Vol. 22 (2012). doi:10.1088/0960-1317/22/8/085023
55. **C. Snoeyink and S.T. Wereley**, "Three-dimensional locating of paraxial point source with axicon," Optics Letters, Vol. 37, 2012. http://dx.doi.org/10.1364/OL.37.002058
54. **P Augustsson, R Barnkob, ST Wereley, H Bruus and T Laurell**, "Automated and temperature-controlled micro-PIV measurements enabling long-term-stable microchannel acoustophoresis characterization," Lab on a Chip (2011). DOI: 10.1039/C1LC20637K [cover article]
53. **A Kumar, SJ Williams, HS Chuang, NG Green and ST Wereley**, "Hybrid opto-electric manipulation in microfluidics—opportunities and challenges", Lab on a Chip (2011). DOI: 10.1039/c1lc20208a
52. **YH Kim, C Cierpka and ST Wereley**, "Flow field around a vibrating cantilever: coherent structure eduction by continuous wavelet transform and proper orthogonal decomposition," J. Fluid Mech., Vol. 669, pp. 584-606. (2011). doi:10.1017/S0022112010005318
51. **Wang, C., Sadeghi, F., Wereley, S. T., Rateick Jr., R. G., and Scott, R.**, "Experimental Investigation of Lubricant Extraction from a Micro-Pocket Flow," Tribology Transactions, Vol. 54, pp. 404-416 (2011).
50. **A Kumar, C Cierpka, SJ Williams, CJ Kähler and ST Wereley**, "3D3C velocimetry measurements of an electrothermal microvortex using wavefront deformation PTV and a single camera," Microfluidics and Nanofluidics, Vol. 10, pp 355-365 (2010). DOI 10.1007/s10404-010-0674-4
49. **HS Chuang, SC Jacobson, and ST Wereley**, "A diffusion-based cyclic particle extractor," Microfluidics and Nanofluidics (2010). DOI 10.1007/s10404-010-0589-0
48. **P Chamarthy, SV Garimella and ST Wereley**, "Measurement of the temperature non-uniformity in a microchannel heat sink using microscale laser-induced fluorescence," International J. Heat and Mass Transfer, Vol. 53, pp. 3275–3283 (2010). doi:10.1016/j.ijheatmasstransfer.2010.02.052
47. **A Kumar, HS Chuang, and ST Wereley**, "Dynamic Manipulation by Light and Electric Fields: Micrometer Particles to Microliter Droplets," Langmuir, Vol. 26, pp. 7656-7660 (2010). DOI: 10.1021/la100614h
46. **A Kumar, JS Kwon, SJ Williams, NG Green, NK Yip, and ST Wereley**, "Optically modulated electrokinetic manipulation and concentration of colloidal particles near an electrode surface," Langmuir, Vol. 26, pp 5262–5272 (2010). DOI: 10.1021/la904661y
45. **SJ Williams, A Kumar, NG Green and ST Wereley**, "Optically induced electrokinetic concentration and sorting of colloids," J. Micromech. Microeng. 20 (2010) 015022 (11pp).
44. **SJ Williams, CB Park, and ST Wereley**, "Advances and applications on microfluidic velocimetry techniques," Microfluidics and Nanofluidics, Vol. 8, p. 709-726 (2010). DOI: 10.1007/s10404-010-0588-1
43. **HS Chuang and ST Wereley**, "Rapid patterning of slurry-like elastomer composites using a laser-cut tape," J. Micromech. Microeng. 19 097001 (5pp) doi: 10.1088/0960-1317/19/9/097001
42. **SJ Williams, A Kumar, N Green, and ST Wereley**, "A simple, optically induced electrokinetic method to concentrate and pattern nanoparticles," Nanoscale (2009). DOI:10.1039/B9NR00033
41. **CP Wang, HS Chuang, F Sadeghi, and ST Wereley**, "Investigation of Fluid Flow out of Microcavities using μPIV," Tribology Transactions, Vol. 52, pp. 817-32 (2009).
40. **ST Wereley and CD Meinhart**, "Recent Advances in Micro Particle Image Velocimetry," Annual Review of Fluid Mechanics, Vol . 42 (2010).
39. **HS Chuang and ST Wereley**, "Design, fabrication and characterization of conducting PDMS for microheaters and temperature sensors," J. Micromechanics and Microengineering, Vol. 19, 045010 (2009) DOI: 10.1088/0960-1317/19/4/045010.
38. **P Chamarthy, SV Garimella and ST Wereley**, "Non-Intrusive Temperature Measurement Using Microscale Visualization Techniques," Vol. 47, Exp. Fluids (2009). DOI 10.1007/s00348-009-0646-1
37. **HS Chuang, A Kumar, and ST Wereley**, "Open Optoelectrowetting Droplet Actuation," Applied Physics Letters, Vol. 93, 064104 (2008).
36. **SJ Williams, A Kumar and ST Wereley**, "Electrokinetic patterning of colloidal particles with optical landscapes," Lab on a Chip (2008). DOI: 10.1039/b810787d
35. **A Kumar, SJ Williams and ST Wereley**, "Experiments on opto-electrically generated vortices," Microfluidics and Nanofluidics (2008). DOI: 10.1007/s10404-008-0339-8
34. **SD Peterson, HS Chuang and ST Wereley**, "Three-Dimensional Particle Tracking Using Micro-Particle Image Velocimetry Hardware," Meas. Sci. Technol., Vol. 19, 115406 (2008). DOI: 10.1088/0957-0233/19/11/115406

33. **A. Kumar, V. Gorti, H. Shang, G.U. Lee, N.K. Yip, and S.T. Wereley**, "Optical Diffusometry Techniques and Applications in Biological Agent Detection," J. Fluids Eng, Vol. 130, 111401 (2008). DOI:10.1115/1.2969430
32. **V.M. Gorti, H. Shang, S.T. Wereley and G.U. Lee**, "Immunoassays in Nanolitre Volume Reactors using Fluorescent Particle Diffusometry," Langmuir, Vol. 24, pp. 2947-2952 (2008).
31. **S.Y. Lee and S.T. Wereley**, "A novel pressure sensing mechanism based on the surface tension and thermodynamic p-v-T relation," J. Micromech. Microeng., Vol. 18, 015020 (2008).
30. **P. Chamarthy, H.K. Dhavaleswarapu, S.V. Garimella, J.Y. Murthy and S.T. Wereley**, "Visualization of convection patterns near an evaporating meniscus using μPIV," Exp. Fluids, Vol. 44, pp. 431-438 (2008).
29. **S.Y. Lee, J. Jang, and S.T. Wereley**, "Effects of Planar Inlet Plenums on the Hydrodynamically Developing Flows in Rectangular Microchannels of Complementary Aspect Ratios," Microfluidics and Nanofluidics (2008). DOI: 10.1007/s10404-007-0179-y
28. **J. Jang and S.T. Wereley**, "Gaseous slip flow analysis of a micromachined flow sensor for ultra small flow applications," J. Micromech. Microeng., Vol. 17, pp. 229-237 (2007).
27. **De Carlo, A.R. Rokkam, M. ul Haque, A. Wereley, S.T. Irazoqui, P.P. Wells, H.W. McLamb, W.T. Roux, S.J. Porterfield, D.M.**, "Development of a Microfluidic Ion Sensor Array (MISA) to Monitor Gravity-Dependent Calcium Fluxes in Ceratopteris Spores," Gravit. and Space Biol. Bull., Vol 19, pp. 123-124 (2006).
26. **A. ul Haque, M. Rokkam, A. R. De Carlo, S.T. Wereley, H.W. Wells, W.T. McLamb, S.J. Roux, P.P Irazoqui, D.M. Porterfield**, "A MEMS fabricated cell electrophysiology biochip for in silico calcium measurements", Sensors and Actuators B, Vol. 123, pp. 391-399 (2007).
25. **W. Qu, I. Mudawar, S.Y. Lee, S.T. Wereley**, "Experimental and Computational Investigation of Flow Development and Pressure Drop in a Rectangular Micro-Channel," ASME J. Electronic Packaging, Vol. 128, pp. 1-9 (2006).
24. **J. Jang and S.T. Wereley**, "Effective heights and Tangential Momentum Accommodation Coefficients of gaseous slip flows in Deep Reactive Ion Etching rectangular microchannels," J. Micromech. Microeng., Vol. 16, pp. 493-504 (2006).
23. **D. Liu, S. Garimella, and S.T. Wereley**, "Infrared Micro-Particle Image Velocimetry in Silicon-Based Microdevices," Exp. Fluids, Vol. 38, pp. 385-392 (2005).
22. **J. Jang and S.T. Wereley**, "Pressure distributions of gaseous slip flow in straight and uniform rectangular microchannels," Microfluidics and Nanofluidics, Vol. 1, pp 41-51 (2004).
21. **H. Sagi, Y. Zhao, and S.T. Wereley**, "Wide Range Flow Sensor—Vacuum through Viscous Flow Conditions," J. Vac. Sci. and Tech. A, Vol. 22, No. 5, pp 1992-1999 (2004).
20. **Y.H. Kim, S.T. Wereley and C.H. Chun**, "Phase-resolved flow field produced by a vibrating cantilever plate between two endplates," Phys. Fluids, Vol. 16, 145-162 (2004).
19. **L. Gui, S.T. Wereley, and Y.H. Kim**, "Advances and applications of the digital mask technique in particle image velocimetry experiments," Meas. Sci. Technol. Technol., Vol. 14, pp 1820–1828 (2003).
18. **C.D. Meinhart and S.T. Wereley**, "Theory of Diffraction-Limited Resolution in Micro Particle Image Velocimetry," Meas. Sci. Technol., Vol. 14, pp 1047-1053, (2003).
17. **S. Devasenathipathy, J.G. Santiago, S.T. Wereley, C.D. Meinhart, and K. Takehara**, "Particle imaging techniques for microfabricated fluidic systems," Exp. Fluids, Vol. 34, pp 504-514 (2003).
16. **S.T. Wereley and L. Gui**, "A correlation-based central difference image correction (CDIC) method and application in a four-roll mill flow PIV measurement," Exp. Fluids, Vol. 34, pp 42-51, (2003).
15. **S.T. Wereley, A. Akonur, and R.L. Lueptow**, "Particle–fluid velocities and fouling in rotating filtration of a suspension," J. Membrane Science, Vol. 209, No. 2, pp 469-484 (2002).
14. **V. Hohreiter, S.T. Wereley, M. Olsen, and J.Chung,** "Cross-correlation analysis for temperature measurement," Meas. Sci. Tech., Vol. 13, pp. 1072-1078, (2002).
13. **L. Gui and S.T. Wereley**, "A correlation-based continuous window shift technique for reducing the peak locking effect in digital PIV image evaluation," Exp. Fluids, Vol. 32, pp 506-517, (2002).
12. **S.W. Stone, C.D. Meinhart, and S.T. Wereley**, "A Microfluidic-based Nanoscope," Exp. Fluids, Vol. 33, No. 5, pp 613-619 (2002).
11. **S.T. Wereley, L. Gui, and C.D. Meinhart**, "Advanced Algorithms for Microscale Velocimetry," AIAA J., Vol. 40, No. 6, pp. 1047-1055 (2002).
10. **R. Gomez, R. Bashir, A. Sarakaya, M.R. Ladisch, J. Sturgis, J.P. Robinson, T. Geng, A.K. Bhunia, H.L. Apple, and S.T. Wereley**, "Microfluidic Biochip for Impedance Spectroscopy of Biological Species," Biomedical Microdevices, Vol. 3, No. 3, 201-209 (2001).

9. **S.T. Wereley and C.D. Meinhart**, "Second-Order Accurate Particle Image Velocimetry," Exp. Fluids, Vol. 31, 258-268, (2001).
8. **C.D. Meinhart, S.T. Wereley, and J.G. Santiago**, "A PIV Algorithm for Estimating Time-Averaged Velocity Fields," J. Fluids Eng., Vol. 122, 285-289, (2000).
7. **C.D. Meinhart, S.T. Wereley, M.H.B. Gray**, "Volume illumination for two-dimensional particle image velocimetry," Meas. Sci. Tech., Vol. 11, 809-814, (2000).
6. **S.T. Wereley and R.M. Lueptow**, "Velocity field for Taylor-Couette flow with an axial flow," Phys. Fluids, Vol. 11, No. 12, 3637-3649 (1999).
5. **C.D. Meinhart, S.T. Wereley, and J.G. Santiago**, "PIV Measurements of a Microchannel Flow," Exp. Fluids, Vol. 27, No. 5, 414-419, (1999).
4. **S.T. Wereley and R.M. Lueptow**, "Inertial particle motion in a Taylor Couette rotating filter," Phys. Fluids, Vol. 11, No. 2, 325-333, (1999).
3. **J.G. Santiago, S.T. Wereley, C.D. Meinhart, D. Beebee, and R.J. Adrian**, "A particle image velocimetry system for microfluidics," Exp. Fluids, Vol. 25, No. 4, 316-319, (1998).
2. **S.T. Wereley and R.M. Lueptow**, "Spatio-temporal character of nonwavy and wavy Taylor Couette flow," J. Fluid Mech. Vol. 364, 59-80, (1998).
1. **S.T. Wereley and R.M. Lueptow**, "Azimuthal velocity in supercritical circular Couette flow," Exp. Fluids, Vol. 18, pp. 1-9, (1994).

Patents

11. **ST Wereley, TL Kinzer-Ursem, KN Clayton, JC Linnes, D Lee, TJ Moehling**, "Methods of measuring structural and functional changes of a biomolecular composition," US Patent 11,221,287, Jan 11, 2022.
10. **KN Clayton, TL Kinzer-Ursem, ST Wereley, JW Salameh**, "System and methods for analyzing particles in a fluid," US Patent 10,794,808, Oct 6, 2020.
9. **JC Ndukaife, AV Kildishev, AA Nnanna, A Boltasseva, VM Shalaev, ST Wereley**, "Multi-site particle sensing system," US Patent 10,436,780, Oct 8, 2019.
8. **JC Ndukaife, A Boltasseva, AA Nnanna, ST Wereley, A Kildishev, VM Shalaev**, "System and method for manipulation of particles," US Patent 9,778,400, Oct 3, 2017.
7. **S.T. Wereley and C. Snoeyink**, "Single image super-resolution microscopy and telescope systems," US Patent 9,494,785, Nov 15, 2016.
6. **S.T. Wereley, A.A. Nnanna, A. Boltasseva, J.C. Ndukaife, A. Mishra**, "Hybrid device for on-chip concentration, manipulation, sorting and sensing of particles on a plasmonic substrate," US Patent 9,443,632, Sep 13, 2016.
5. **A.M.E. Amin, H.S. Chuang, S.T. Wereley, M.S. Thottethodi, T.N. Vijaykumar, S.C. Jacobson**, "Variable volume mixing and automatic fluid management for programmable microfluids," US Patent 9,211,539, Dec 15, 2015.
4. **H.S. Chuang, A. Kumar, S.T. Wereley**, "Open optoelectrowetting droplet actuation device and method," US Patent 8,753,498, June 17, 2014.
3. **H.S. Chuang and S.T. Wereley**, "Microfluidic Purge Valve," US Patent 8,376,317, Feb 19, 2013.
2. **C.D. Meinhart, J.G. Santiago, R.J. Adrian, and S.T. Wereley,** "Depth-of-Field Micron Resolution Velocimetry with Pulsed Images of Injected Solid Particles," US Patent 7,057,198, June 6, 2006.
1. **C.D. Meinhart, J.G. Santiago, R.J. Adrian, and S.T. Wereley,** "Micron Resolution Particle Image Velocimeter," US Patent 6,653,651, Nov. 25, 2003.

Articles About Our Microfluidics Work

BE DiGregorio, "Nanoscale Technology Separates Microbes by Size Mainly, Plus Charge," Vol. 8, No. 4, p. 155, April 2013.

Trade Publication Articles

S. Wereley, E. Robinson, T. Lundy, "Microfluidics—The Birth of an Industry," R&D Magazine, Vol. 49, No. 2, pp. 44-46 (2006).

A. ul Haque, M. Rokkam, A. R. De Carlo, S. T. Wereley, H.W. Wells, W.T. McLamb, S.J. Roux, D.M. Porterfield, "Development of a MEMs based *in silico* cell physiology system for measuring real-time gravity responses in single cells," NASA Tech Briefs (2006).

V. Gorti and S.T. Wereley, "Benefits of microscale particle image velocimetry," Micro/Nano, Vol. 8, No. 9, pp. 18-19, (2003).

Conference Presentations and Papers *26 invited or keynote*

190. **KN Clayton, TJ Moehling, D Lee, K Byers, M Henderson, A Witten, G Berglund, R Preston, ST Wereley, JC Linnes, TL Kinzer-Ursem**, "Development of a New Method and Platform for Point-of-Care Pathogen Detection," Society for Laboratory Automation and Screening, San Diego, California, February 5, 2018. Poster.
189. **KN Clayton, TJ Moehling, ST Wereley, JC Linnes, TL Kinzer-Ursem**, "Development of a New Method and Platform for Point-of-Care Pathogen Detection," Society for Laboratory Automation and Screening, San Diego, California, 2018. Poster.
188. **KN Clayton, TJ Moehling, D Lee, GD Berglund, AJ Witten, ST Wereley, JC Linnes, TL Kinzer-Ursem**, "Detecting Pathogens with Viscosity-Based Measurements," Miniaturized Systems for Chemistry and Life Sciences (µTAS), Savannah, Georgia, 2017. Oral Presentation.
187. **KN Clayton, TJ Moehling, GD Berglund, AJ Witten, D Lee, ST Wereley, JC Linnes, TL Kinzer-Ursem**, "A Viscosity-Based Measurement System for Pathogen Detection," American Institute of Chemical Engineers, Minneapolis, MN, 2017. Oral Presentation.
186. **KN Clayton, TJ Moehling, AJ Witten, GD Berglund, D Lee, ST Wereley, JC Linnes, TL Kinzer-Ursem**, "A Viscosity-Based Measurement System for Pathogen Detection," Biomedical Engineering Society, Phoenix, AZ, 2017. Oral Presentation.
185. **KN Clayton, ST Wereley and TL Kinzer-Ursem**, "Implementation of Particle Diffusometry for Bionanotechnology Measurements and Applications," International Conference on Bioengineering and Nanotechnology (Chicago, IL) 2017. *(Poster contest winner)*
184. **JC Ndukaife, AG Agwu Nnanna, AV Kildishev, VM Shalaev, ST Wereley** *(Invited)*, Alexandra Boltasseva, "Shaping the future of plasmon nano-optical tweezing", (Gordon Research Conference on Plasmonics and Nanophotonics, 2016)
183. **ST Wereley** (*Plenary Keynote*), "Opto-electric Droplet and Particle Physics," Joint Symposium of the 18th Annual Conference of Chinese Society of Micro & Nano Technology and Microsystems & Nanoengineering Summit 2016 (CSMNT2016 & MAN2016), July 28–31, 2016 (Beijing, China).
182. **ST Wereley** (*Keynote*), "Visualizing Microscale Electrothermal Vortices," International Symposium on Flow Visualization, June 19-22, 2016 (Gatlinburg, TN).
181. **ST Wereley**, "Droplet and Particle Technologies: Entrepreneurship Opportunities," The Second North Latitude 45 ° Innovative Entrepreneurial Forum, June 15-17, 2016 (Harbin, China).
180. **ST Wereley** (*Keynote*), ";" International Conference of Microfluidics, Nanofluidics and Lab-on-a-Chip, June 10-12, 2016 (Dalian, China).
179. **ST Wereley** (*Invited*), "Non-contact Micro/Nano Object Manipulation," TechConnect World Innovation Conference and Expo 2016, May 23-25, 2016 (National Harbor, Maryland).
178. **Justus C. Ndukaife, A. G. Agwu Nnanna, Alexander V. Kildishev, Vladimir M. Shalaev, Steven T. Wereley, Alexandra Boltasseva**, "On-demand rapid transport and stable trapping of nanoparticles by a hybrid electrothermoplasmonic nanotweezer", (presented at SPIE Optics and Photonics 2016)
177. **Justus C. Ndukaife, A. G. Agwu Nnanna, Alexander V. Kildishev, Vladimir M. Shalaev, Steven T. Wereley, Alexandra Boltasseva**, "Controlled Rapid Delivery and On-chip Trapping of Nanoparticles by a Hybrid Electrothermoplasmonic Nanotweezer", (presented at CLEO 2016)
176. **Justus C. Ndukaife, A. G. Agwu Nnanna, Vladimir M. Shalaev, Steven T. Wereley, Alexandra Boltasseva**, "The hybrid electrothermoplasmonic nanotweezer: A new paradigm in nanomanipulation", (presented at MRS Spring Meeting, Phoenix, AZ, March 2016)
175. **Justus C. Ndukaife, A. G. Agwu Nnanna, Steven T. Wereley, Vladimir M. Shalaev, Alexandra Boltasseva**, "Plasmofluidic Device for On-chip Concentration, Manipulation and Sensing of Particles using TiN Plasmonic Nanoantenna Array", (presented at MRS Fall Meeting, Boston, MA, December 2015)
174. **Justus C. Ndukaife, A. G. Agwu Nnanna, Alexander V. Kildishev, Vladimir M. Shalaev, Steven T. Wereley, Alexandra Boltasseva,** "Hybrid Electroplasmonic Nanotweezer (HENT): Shaping the Future of Nanomanipulation", (poster presented at ASME IMECE Micro/Nano Forum 2015, Houston Texas, USA, November 13-19, 2015). (Best paper award)
173. **Justus C. Ndukaife, A. G. Agwu Nnanna, Alexandra Boltasseva, Steven T. Wereley**, "Versatile Plasmofluidic Device for Long-range Transport and On-chip Capture of Particles",(oral presentation at 11th International Symposium on PIV, Santa Barbara, CA September 14-16, 2015)
172. **Justus C. Ndukaife, Alexander V. Kildishev, A. G. Agwu Nnanna, Steven T. Wereley, Vladimir M. Shalaev, Alexandra Boltasseva** (*Invited*), "Electrothermoplasmonic Flow for Plasmon-assisted Optical

Trapping", (invited talk for 2015 SPIE Conference on Plasmonics: Metallic Nanostructures and Their Optical Properties XIII, San Diego, California, USA, August 9-13, 2015)

171. **Justus C. Ndukaife, Alexander V. Kildishev, A. G. Agwu Nnanna, Steven T. Wereley, Vladimir M. Shalaev, Alexandra Boltasseva**, "Hybrid Electroplasmonic Nanotweezer (HENT): Versatile Plasmofluidic Device for On-chip Capture, Manipulation and Printing of Particles on Plasmonic Hotspots", (poster presented at Summer School on Complex Photonics at the International School of Physics, Enrico Fermi, Varenna, Italy, July 13-18, 2015)
170. **Justus C. Ndukaife, Alexander V. Kildishev, A. G. Agwu Nnanna, Steven T. Wereley, Vladimir M. Shalaev, Alexandra Boltasseva**, "Versatile Plasmofluidic Device for On-chip Concentration, Manipulation and Sensing of Particles in Suspensions", (poster presented at the Gordon Research Conference on Microfluidics, Mount Snow, VT, June 2015)
169. **Justus C. Ndukaife, Alexander V. Kildishev, A. G. Agwu Nnanna, Steven T. Wereley, Vladimir M. Shalaev, Alexandra Boltasseva**, "Plasmon-Assisted Optoelectrofluidics", (oral presentation AW3K.5, CLEO /A&T Topical Review - Optofluidics Microsystems I, 2015 Conference, San Jose, CA, USA, May 10-15, 2015)
168. **Justus C. Ndukaife, Avanish Mishra, Urcan Guler, A. G. Agwu Nnanna, Steven T. Wereley, Alexandra Boltasseva**, " Photothermal heating enabled by plasmonic nanoantennas for electrokinetic manipulation and sorting of submicron particles", (oral presentation FTh1K.2, CLEO 2014, San Jose, CA, USA, June 8-13, 2014)
167. **Justus C. Ndukaife, Avanish Mishra, Urcan Guler, A. G. Agwu Nnanna, Steven T. Wereley, Alexandra Boltasseva**, " Thermoplasmonics for Optofluidics", NSF Center for Photonics and Multiscale Nanomaterials IRG2 Review Meeting, March 28, 2014, Purdue University, W/L, USA
166. **Justus C. Ndukaife, Avanish Mishra, Urcan Guler, A. G. Agwu Nnanna, Steven T. Wereley, Alexandra Boltasseva**, "A new Plasmofluidic Device for On-chip Concentration, Manipulation and Sorting of Particles on a Plasmonic Substrate", (NSF Center for Photonics and Multiscale Nanomaterials All-Hands Meeting, September 26, 2014, University of Michigan, Ann Arbor, USA)
165. **K Clayton, A Mishra and ST Wereley**, "Rapid Electrokinetic Patterning for Vertical Stacking and Manipulation of Particles," Pres. #R10.00009, Amer. Phys. Soc./Div. Fluid Dyn. Annual Meeting (San Francisco, CA, Nov. 2014).
164. **A Mishra, S Williams and ST Wereley**, "Electrokientic Patterning of Metal Nanoparticles and Nanowires," Pres. #R10.00006, Amer. Phys. Soc./Div. Fluid Dyn. Annual Meeting (San Francisco, CA, Nov. 2014).
163. **R Thakur, A Amin and ST Wereley**, "Convection-diffusion driven concentration gradients in nanolitre droplets for microfluidic screening applications," Pres. #D10.00001, Amer. Phys. Soc./Div. Fluid Dyn. Annual Meeting (San Francisco, CA, Nov. 2014).
162. **JW Khor, A Mishra, X Pan and ST Wereley**, "Investigation of Material Dependence in Electrothermal Vortex," Pres. #A10.00004, Amer. Phys. Soc./Div. Fluid Dyn. Annual Meeting (San Francisco, CA, Nov. 2014).
161. **SJ Williams, A Mishra, V Velasco and ST Wereley**, "Electrothermal Flow Patterns Generated by Resistive Heaters", 12th International Conference on Nanochannels, Microchannels, and Minichannels, Chicago, USA, August 3-7, 2014.
160. **JC Ndukaife, A Mishra, U Guler, AA Nnanna, ST Wereley, and A Boltasseva**, "Photothermal heating enabled by plasmonic nanoantennas for electrokinetic manipulation and sorting of submicron particles," CLEO, San Jose, USA, June 8-13, 2014.
159. **A Mishra, V Kulkarni, JW Khor and ST Wereley**, "Low Interfacial Tension Measurement with Synthetic Schlieren Imaging," Pres. # E32.00001, Amer. Phys. Soc./Div. Fluid Dyn. Annual Meeting (Pittsburgh, PA, Nov. 2013).
158. **ST Wereley and A Mishra**, "Hybrid Opto-electric Manipulation of Macromolecules," Pres. # E6.00001, Amer. Phys. Soc./Div. Fluid Dyn. Annual Meeting (Pittsburgh, PA, Nov. 2013).
157. **SJ Williams, V Velasco, A Mishra, J-S Kwon, and ST Wereley**, "Rapid electrokinetic patterning (REP): manipulating colloids from nanoparticles to bacteria," 2013 Kentucky Nano Symposium, Louisville, KY, Aug. 16-17, 2013.
156. **C Snoeyink and ST Wereley**, "Bessel Beam Microscopy: Three Dimensional Particle Tracking with Super-Resolution," Particle Image Velocimetry 2013 (Delft, The Netherlands 1-3 July, 2013).
155. **A Mishra, V Kulkarni, JW Khor and ST Wereley**, "Surface Tension Induced Meniscus Measurement using Free Surface Synthetic Schlieren," Particle Image Velocimetry 2013 (Delft, The Netherlands 1-3 July, 2013).

154. **ST Wereley** (*Invited*), "Opto-electric Manipulation of Particles and Droplets," 8th World Conference on Experimental Heat Transfer, Fluid Mechanics and Thermodynamics *ExHFT-8* (June 16-20, 2013 Lisbon, Portugal).
153. **JS Kwon, ST Wereley**, "Theoretical and Experimental Characterization of an Electrothermal Microfluidic Flow," Advances in Microfluidics and Nanofluidics (Notre Dame, IN, May 24-26, 2013).
152. **A Mishra, K Clayton, R Thakur, SJ Williams, A Kumar, ST Wereley**, "Rapid Optoelectrokinetic Manipulation of Nanoparticles," Advances in Microfluidics and Nanofluidics (Notre Dame, IN, May 24-26, 2013).
151. **JS Kwon, V Velasco, SJ Williams, ST Wereley**, "Rapid Electrokinetic Patterning Technique for Manipulation of Colloids and Microorganisms and its Technical Advancement," Advances in Microfluidics and Nanofluidics (Notre Dame, IN, May 24-26, 2013).
150. **JS Kwon, V Velasco, SJ Williams, ST Wereley**, "Rapid Electrokinetic Patterning Technique for Manipulation of Colloids and Microorganisms, and its Technical Advancement," 2nd European Optical Society Conference on Optofluidics *EOSOF 2013* (Munich, Germany, May 13-15, 2013).
149. **A Mishra, R Thakur, SJ Williams, A Kumar, ST Wereley**, "Optoelectrokinetic trapping of Gold Nanoparticles," 2nd European Optical Society Conference on Optofluidics *EOSOF 2013* (Munich, Germany, May 13-15, 2013).
148. **ST Wereley (*Invited*),** "A Multiscale Suite of Particle and Droplet Manipulation Technologies," ASME/IMECE, IMECE2012-85373, Houston, TX, Nov 2012.
147. **JS Kwon and ST Wereley**, "A new dimensionless variable for electrothermal microfluidic flow," ASME/IMECE, IMECE2012-94082, Houston, TX, Nov 2012.
146. **JP Kim, JS Kwon and ST Wereley**, "Experimental Results of Electrothermal Vortex in Parallel ITO-glass with High Conductivity Medium and AC electric field and Laser," ASME/IMECE, IMECE2012-94075, Houston, TX, Nov 2012.
145. **C Park and ST Wereley**, "Twin Vortex Flow Generation under a Non-Uniform Alternating Electric Field and Optical Illumination," IMECE2012-93989, ASME/IMECE, Houston, TX, Nov 2012. *Best poster, Fluids Engineering Division, Micro Nano Forum.*
144. **C Park and ST Wereley**, "AC electrokinetic flow generation with various types of electrodes," ASME/IMECE, IMECE2012-87858, Houston, TX, Nov 2012.
143. **ST Wereley *(Invited)***, "Lab on a Chip Applications of Optoelectric Particle and Droplet Manipulation," ICNMM2012-73268, 10th International Conference on Nanochannels, Microchannels, and Minichannels, July 2012, Puerto Rico.
142. **JS Kwon and ST Wereley**, "μPIV characterization of a toroidal microfluidic vortex driven by opto-electrokinetic methods," Abstract D18.05, Amer. Phys. Soc./Div. Fluid Dyn. Annual Meeting (Baltimore, MD, Nov. 2011).
141. **ST Wereley**, "Random uncertainty estimates of PIV measurements using correlation statistics," Abstract H26.02, Amer. Phys. Soc./Div. Fluid Dyn. Annual Meeting (Baltimore, MD, Nov. 2011).
140. **JS Kwon and ST Wereley**, "INVESTIGATION FOR TOROIDAL MICROFLUIDIC VORTICES GENERATED BY A LASER ILLUMINATION APPLICATION IN AN UNIFORM ELECTRIC FIELD," IMECE/ASME, IMECE2011-62743, Denver, CO, Nov. 2011.
139. **K Han, ST Wereley, JH Oh, Z Zhang**, "STUDY ON FACTORS IN COFFEE-RING STRUCTURE FORMATION USING PIV METHOD," IMECE/ASME, IMECE2011-63231, Denver, CO, Nov. 2011.
138. **SJ Williams, JS Kwon, SP Ravindranath, J Irudayaraj, and ST Wereley**, "Rapid concentration and manipulation of colloids and microorganisms through double layer polarization electrokinetics," poster T32A, 15th International Conference on Miniaturized Systems for Chemistry and Life Sciences (Micro-TAS, Seattle, WA, Oct 2011).
137. **ST Wereley (*invited*)**, "Software Programmable Lab-on-a-Chip Applications and Optimization," Lab-on-a-Chip World Congress (San Francisco, CA, Sep 2011).
136. **R Thakur, SJ Williams, R Cohn, J Rathfon, JF Berret, M Yan, ST Wereley**, "Patterning of non-spherical particles onto electrode surface: Study of orientation behavior under viscous fluid and AC electrokinetic forces," Amer. Phys. Soc./Div. Fluid Dyn. Annual Meeting (Long Beach, CA, Nov. 2010).
135. **C Snoeyink and ST Wereley**, "A Novel 3 Dimension 3 Component Micro-PIV System," Pres. # RW.00007, Amer. Phys. Soc./Div. Fluid Dyn. Annual Meeting (Long Beach, CA, Nov. 2010).
134. **C Park and ST Wereley**, "Using TEM For the Nano-scale Particle Image Velocimetry," IMECE/ASME, IMECE2010-38835, Vancouver, CA, Nov. 12-18, 2010.

133. **JS Kwon, S Ravindranath, A Kumar, J Irudayaraj, and ST Wereley**, Application of an optically induced electrokinetic manipulation technique on live bacteria," IMECE/ASME, IMECE2010-39324, Vancouver, CA, Nov. 12-18, 2010.
132. **R Thakur and ST Wereley**, "Optically Induced Rapid Electrokinetic patterning of Non-spherical particles- Study of The Colloidal Phase Transition," IMECE/ASME, IMECE2010-39665, Vancouver, CA, Nov. 12-18, 2010.
131. **SJ Williams and ST Wereley**, "Experiments and simulation of a dielectrophoretically oscillating microparticle," Paper 1598, Proceedings of the 15th International Symposium on the Application of Laser Techniques to Fluid Mechanics, (Lisbon, Portugal), July 5-8, 2010.
130. **JS Kwon, A Kumar, SJ Williams and ST Wereley**, "A study for opto-electrokinetic forces of colloidal particles on an electrode surface using Voronoi and Delaunay tessellation," Paper 1775, Proceedings of the 15th International Symposium on the Application of Laser Techniques to Fluid Mechanics, (Lisbon, Portugal), July 5-8, 2010.
129. **A Kumar, C Cierpka, SJ Williams, C J Kahler and ST Wereley**, "3D3C velocimetry measurements of an electrothermal microvortex using wavefront deformation PTV and a single camera," Paper 1594, Proceedings of the 15th International Symposium on the Application of Laser Techniques to Fluid Mechanics, (Lisbon, Portugal), July 5-8, 2010.
128. **ST Wereley** (*invited*), "Microscale Velocity and Temperature Measurement Techniques," American Institute of Aeronautics and Astronautics 40th Fluid Dynamics Conference (June 28-July 1, 2010, Chicago, IL).
127. **Smith, C.T., Thakur, R., Chuang, H.S., Kumar, A., Wereley, S.T.**, "A hybrid optoelectric device for multi-scale particle and droplet manipulation," Proceedings of SPIE, Vol.7762, pp.68, June, 2010.
126. **HS Chuang, A Kumar, CT Smith, and ST Wereley**, "Rapid and dynamic multiscale manipulation based on a hybrid optoelectric device," Trends in Optical Micromanipulation II, Innsbruck, Austria, April 11-16, 2010.
125. **ST Wereley, SJ Williams, A Kumar, CH Chuang, JS Kwon and CT Smith** (*invited*), "Opto-electric Manipulation of Droplets and Colloids for Material Assembly," Materials Research Society Spring Meeting (San Francisco, CA April 6-8, 2010).
124. **HS Chuang and ST Wereley** (*invited*), "Microfluidic gas purge valves," MNHMT/ASME, MNHMT2009-18534, Shanghai, China, Dec. 18-21, 2009.
123. **A Kumar, SJ Williams, and ST Wereley** "Micro and nano particle manipulation using optically modulated electrokinetic flows" ASME 2009 Micro/Nanoscale Heat and Mass Transfer International Conference, MNHMT2009-18493 Shanghai, China, Dec. 18-21, 2009. (*Awarded "Excellent Paper" distinction—3 given among 340 submissions*)
122. **HS Chuang, A Kumar, and ST Wereley**, "Light-Enabled Droplet Manipulations," Gallery of Fluid Motion, APS/DFD 62nd Annual Meeting, Minneapolis, MN, USA, Nov. 22-24, 2009. (APS highlighted video)
121. **HS Chuang, ST Wereley, and SC Jacobson**, "An automated cyclic particle extractor," IMECE/ASME, IMECE2009-10422, Lake Buena Vista, FL, USA, Nov. 13-19, 2009.
120. **A Kumar, SJ Williams, JS Kwon, NG Green, NK Yip, and ST Wereley**, "Optically induced rapid electrokinetic patterning: a study of the operational regimes and dominant forces" *Proc. ASME/IMECE*, Lake Buena Vista, FL, Nov. 13-19, 2009.
119. **SJ Williams**, A Kumar, ST Wereley, "Continuous colloidal concentration and patterning with optically induced AC electrokinetics" *2009 AIChE Annual Meeting, Annual Meeting of the American Electrophoresis Society*, Nashville, TN, Nov. 8-13, 2009.
118. **ST Wereley**, (*invited*), "Massively parallel opto/electric manipulation of colloidal particles," Laser Science XXV (Oct. 11-15, 2009, San Jose, CA).
117. **ST Wereley** (*invited*), "Micrometer and nanometer spatial resolution with μPIV," 25 Years of Particle Image Velocimetry in Aerodynamics (Sept. 23-25, 2009, Göttingen, Germany).
116. A Kumar, **SJ Williams**, and ST Wereley, "A novel optically driven electrokinetic technique for manipulating nanoparticles" *SPIE Symposium on SPIE Nanoscience + Engineering*, Vol. *7400*, paper 74000V, (San Diego, CA, Aug. 2-6, 2009).
115. **SJ Williams, A Kumar, and ST Wereley**, "Optically induced electrohydrodynamics and electrokinetic colloidal aggregation" Proc. ASME/FEDSM, Paper#2009-78121 (Vail, CO), Aug. 2-6, 2009.
114. **SJ Williams and ST Wereley**, "Hydrodynamic investigations of a dielectrophoretically trapped and agitated microparticle" Proc. ASME/FEDSM, Paper#2009-78068 (Vail, CO), Aug. 2-6, 2009.

113. **ST Wereley, E Judokusumo, A Kumar, and SJ Williams** (*invited*), "Velocity Fields in Electrooptically-Induced Fluid Flows," Proc. Seventh Int. ASME Conf. on Nanochannels, Microchannels and Minichannels (June 22-24, 2009, Pohang, South Korea).
112. **A Kumar, SJ Williams and ST Wereley**, "Optically Modulated Rapid Electrokinetic Patterning For Micro and Nano Particles," Proc. European Conferences on Biomedical Optics, Vol. *7371*, paper 737110 (14-18 June 2009, Munich, Germany).
111. **ST Wereley, SJ Williams, and A Kumar** (*invited*), "Optoelectric Micro/Nano Particle Manipulation for Biological Applications," presented at the LifeChips 2009 Symposium (UC-Irvine, Jan. 2009).
110. **ST Wereley** (*invited*), "Flow Diagnostics for Micro/Nano Device Characterization," presented at the International Conference on Fascinating Advancement in Mechanical Engineering 2009 (Mepco-Schlenk Engineering College, Sivakasi, TN, India, Dec. 2008).
109. **SJ Williams, SD Peterson, A Kumar, and ST Wereley**, "Three dimensional transport of an optically induced electrothermal microvortex," Pres. # LN.00003, Amer. Phys. Soc./Div. Fluid Dyn. Annual Meeting (San Antonio, TX, Nov. 2008).
108. **E Judokusumo, A Kumar, SJ Williams, and ST Wereley**, "Analysis of Optically Induced Fluid Flows in Electric Fields," Proc. ASME/IMECE 2008-66935 (October 31-November 6, 2008 Boston, 2008, Boston).
107. **HS Chuang, A Amin, M Thodentoddi, T Vijaykumar, S Jacobson, and ST Wereley**, "POLYDIMETHYLSILOXANES (PDMS) PERISTALTIC PUMP CHARACTERIZATION FOR PROGRAMMABLE LAB-ON-A-CHIP APPLICATIONS", Proc. 12th International Conference on Miniaturized Systems for Chemistry and Life Sciences (µTAS2008), San Diego, USA, Oct 12-16, 2008.
106. **A Kumar, SJ Williams, and ST Wereley**, "Rapid electrokinetic patterning of colloids using optical landscapes" Proc. 12th International Conference on Miniaturized Systems for Chemistry and Life Sciences (µTAS2008), San Diego, USA, Oct 12-16, 2008.
105. **SJ Williams, P Chamarthy and ST Wereley**, "Laser-Induced Fluorescence Thermometry for Joule Heating in AC Electrokinetic Chips," Proc. ASME-FED paper # 55175 (Jacksonville, FL, Aug. 10-14), 2008.
104. **SJ Williams, A Kumar and ST Wereley**, "Rapid colloidal assembly with optically induced electrokinetic forces," presented at University Government Industry Micro/nano Symposium, Louisville, KY, July 13-16, 2008.
103. **R Nasarek, ST Wereley, P Stephan**, "Flow field measurements near a moving meniscus of a capillary flow with micro Particle Image Velocimetry (µPIV), Proc. of the Sixth International Conference on Nanochannels, Microchannels, and Minichannels, Darmstadt, Germany, June 23-25, 2008.
102. **AM Amin, M Thottethodi, TN Vijaykumar, ST Wereley and SC Jacobson**, "Automatic Volume Management for Programmable Microfluidics," Programming Language Design and Implementation Conference (Tucson, AZ), paper #13, June 7-13, 2008.
101. **Z Huang, HS Chuang, ST Wereley and MK Banks**, "Effect of biofilm surface roughness on thickness of hydrodynamic boundary layer and coefficient of friction," Paper Coll-476, American Chemical Society Spring Meeting (New Orleans, LA), Apr. 6-10, 2008.
100. **A Kumar, NK Yip and ST Wereley**, "Particle transport on periodic potential landscapes," Pres. # EA.00004, Amer. Phys. Soc./Div. Fluid Dyn. Annual Meeting (Salt Lake City, UT, Nov. 2007).
99. **P Chamarthy, ST Wereley and SV Garimella**, "Microscale laser-induced fluorescence method for non-intrusive temperature measurement," Proc. ASME/IMECE, Paper #2007-41935 (Seattle, WA), Nov. 11-15, 2007.
98. **H.S. Chuang and S.T. Wereley**, "In-Vitro Wall Shear Stress Measurements for Microfluid Flows by using Second-order SPE micro-PIV," Proc. ASME/IMECE, Paper #2007-41171 (Seattle, WA), Nov. 11-15, 2007.
97. **R. Muddu and S.T. Wereley**, "Numerical Simulation of Optical Trap systems," Proc. ASME/IMECE, Paper #2007-42411 (Seattle, WA), Nov. 11-15, 2007.
96. **S.J. Williams, S.T. Wereley**, "Field Flow Analysis of Dielectrophoretically Suspended Particles," Proc. ASME/IMECE, Paper #2007-41252 (Seattle, WA), Nov. 11-15, 2007.
95. **A.M. Amin, M. Thottethodi, T.N. Vijaykumar, S.T. Wereley and S.C. Jacobson**, "Aquacore: A General-Purpose Architecture for Programmable Microfluidics," paper T33C, µYAS (Paris, France), Oct. 7-11, 2007.
94. **H.S. Chuang and S.T. Wereley**, "Nanometer-resolution and second-order accurate SPE micro-PIV," 7th International Symposium on Particle Image Velocimetry (Rome, Italy), Sept. 11-14, 2007.

93. **A.M. Amin, M. Thottethodi, T.N.Vijaykumar, S.Wereley and S.C. Jacobson**, "AquaCore: A programmable Architecture for Microfluidics," Proc. 34th Annual International Symposium on Computer Architecture (ISCA) (San Diego, CA), pages 254-265, June 10-13, 2007.
92. **S.T. Wereley** (*invited*), "Interesting Problems in Microflows," Schloß Dagstuhl-Seminar 07121: *Experimental Fluid Mechanics, Computer Vision & Pattern Recognition* (International Conference and Research Center for Computer Science, Wadern, Germany), March 18 – 23, 2007.
91. **A.H. Ewing, S. Kim; S.T. Wereley**, "Mediating Fluidic Self- Assembly with optical traps," Proc. AICHE Annual Meeting, paper 35E, (San Francisco, CA) Nov. 12-17, 2006.
90. **S.T. Wereley** (*keynote*), "Micro and Nanoscale Flow Measurement," 33rd National and 3rd International Conference on Fluid Mechanics and Fluid Power (Mumbai, India), Dec. 7-9, 2006.
89. **A. Kumar, V. Gorti, S.T. Wereley**, "Biological Agent Detection Using Optical Diffusometry Methods," Proc. ASME/IMECE, Paper #2006-13267 (Chicago, IL), Nov. 5-10, 2006.
88. **H.K. Dhavaleswarapu, P. Chamarthy, S.V. Garimella, J.Y. Murthy, and S.T. Wereley**, "Experimental Investigation of Thermocapillary Convection near an Evaporating Meniscus," Proc. ASME/IMECE, Paper #2006-13901 (Chicago, IL), Nov. 5-10, 2006.
87. **P. Chamarthy, S.T. Wereley and S.V. Garimella**, "Simultaneous Measurement of Temperature and Velocity Using µPIV," Proc. ASME/IMECE, Paper #2006-14079 (Chicago, IL), Nov. 5-10, 2006.
86. **H.-S. Chuang, S. T. Wereley,** "Study of Single Pixel Evaluation for Experimental Measurements in a Microchannel," Proc. ASME/IMECE, Paper #2006-14517 (Chicago, IL), Nov. 5-10, 2006.
85. **C. Park, S.T. Wereley, O. Campanella, D.E. Nivens, K.M. Little, H. Sumali**, "Measurements of Mechanical Properties of Human Red Blood Cells," Proc. ASME/IMECE, Paper #2006-15175 (Chicago, IL), Nov. 5-10, 2006.
84. **S.T. Wereley** *(invited)*, "Micro and Nanoscale Flow Measurement and Visualization," Proceedings of the 12th International Symposium on Flow Visualization (Göttingen, Germany), Sept. 10-14, 2006.
83. **P. Chamarthy, H.K. Dhavaleswarapu, S.V. Garimella, J.Y. Murthy and S.T. Wereley**, "Visualization of convection patterns near an evaporating meniscus using µPIV," Proceedings of the 12th International Symposium on Flow Visualization (Göttingen, Germany), Sept. 10-14, 2006.
82. **H.-S. Chuang, S. T. Wereley, C. D. Meinhart, D. Tretheway**, "Single pixel evaluation PIV for nano-resolution flow measurements," paper number 32.4, Proceedings of the 13th International Symposium on the Application of Laser Techniques to Fluid Mechanics, (Lisbon, Portugal), June 26-29, 2006.
81. **P. Chamarthy, S.T. Wereley and S.V. Garimella**, "Simultaneous Measurement of Temperature and Velocity using Cross-Correlation µPIV," paper number 12.4, Proceedings of the 13th International Symposium on the Application of Laser Techniques to Fluid Mechanics, (Lisbon, Portugal), June 26-29, 2006.
80. **A.R. De Carlo, M. Rokkam, A. ul Haque, S.T. Wereley, P.P. Irazoqui, H.W. Wells, W.T. McLamb, S.J. Roux, D.M. Porterfield,** "Development of a Microfluidic Ion Sensor Array (MISA) to Monitor Gravity-Dependent Calcium Fluxes in Ceratopteris Spores," Abstract #56, Annual Meeting of the American Society for Gravitational and Space Biology (Reno, NV, November 1-4, 2005).
79. **M. Rokkam, P. P. Irazoqui, A. ul Haque, A. R. De Carlo, S. T. Wereley, H.W. Wells, W.T. McLamb, D.M. Porterfield**, "Development and testing of an amplifier array for interfacing multichannel digital data acquisition and *in silico* cell physiology MEMS sensor devices," Institute of Biological Engineering Annual Meeting (Tucson, AZ, March 8-12, 2006).
78. **A. ul Haque, A. R. De Carlo, M. Rokkam, S.T. Wereley, H.W. Wells, W.T. McLamb, S.J. Roux, D.M. Porterfield**. Design, fabrication and characterization of an in silico cell physiology lab for measuring cellular responses to microgravity, Institute of Biological Engineering Annual Meeting. March 8-12, 2006
77. **A. ul Haque, A. R. De Carlo, M. Rokkam, S.T. Wereley, H.W. Wells, W.T. McLamb, S.J. Roux, D.M. Porterfield**. Design, fabrication and characterization of an in silico cell physiology lab for measuring cellular responses to microgravity. International MEMS conference. Singapore, May 9-12, 2006
76. **J. Cao and S.T. Wereley**, "Shear-induced migration of dilute Brownian suspensions," Pres. # EC.00007, Amer. Phys. Soc./Div. Fluid Dyn. Annual Meeting (Chicago, IL, Nov. 2005).
75. **P. Chamarthy and S.T. Wereley**, "Temperature Measurement using Brownian Motion in the Presence of a Velocity Gradient," Pres. # BB.00008, Amer. Phys. Soc./Div. Fluid Dyn. Annual Meeting (Chicago, IL, Nov. 2005).
74. **S.T. Wereley and C.D. Meinhart**, "Spatial Resolution and Errors of Single Pixel Interrogation," Proc. ASME/IMECE, Paper #2005-83065, (Orlando, FL, Nov. 2005).

73. **P. Chamarthy, S. Wereley, S. V. Garimella**, "Assessment of Alternate Approaches for Temperature Measurement using Brownian Motion," 6th International Symposium on Particle Image Velocimetry (Pasadena, CA, Sept. 21-23, 2005).
72. **J. Cao, S. T. Wereley**, "PIV Measurement in Capillary Tube Flow and Measurement Error Due to Multi-pixel Window Correlation," 6th International Symposium on Particle Image Velocimetry (Pasadena, CA, Sept. 21-23, 2005).
71. **S.T. Wereley, C.D. Meinhart, D. Tretheway, L. Gui, A. Sud**, "Bias and Random Errors in Single Pixel Interrogation," 6th International Symposium on Particle Image Velocimetry (Pasadena, CA, Sept. 21-23, 2005).
70. **S.T. Wereley**, "Optical Diagnostics for Nanoscale Flow Problems?" First International Nanofluidics Workshop (Boekelo, The Netherlands, April 18-20 2005).
69. **S.T. Wereley** (*keynote*), "Progress and Current Developments in Micro-PIV," Joint International PIVNET II / ERCOFTAC Workshop on Micro PIV and Applications in Microsystems (Delft, The Netherlands, April 7-8, 2005).
68. **L. Karp-Boss, P.A. Jumars, P. Grant, S.T. Wereley, and E.H. Klingler**, "Motion of diatoms in steady and unsteady shear flows," ASLO 2005 Aquatic Sciences Meeting (Salt Lake City, Utah, February 20-25, 2005).
67. **J. Cao and S.T. Wereley**, "Brownian particle distribution in tube flows," Proc. ASME/IMECE, Paper #2004-61899, (Anaheim, CA, Nov. 2004).
66. **S.Y. Lee, J. Jang, and S.T. Wereley**, "Entrance length of Low Reynolds number flow in microchannel," Proc. ASME/IMECE, Paper #2004-61908, (Anaheim, CA, Nov. 2004).
65. **P. Chamarthy and S.T. Wereley**, "Mixing Characteristics in a 2D Serpentine Micro-Channel ," Proc. ASME/IMECE, Paper #2004-61902, (Anaheim, CA, Nov. 2004).
64. **S.T. Wereley and I. Whitacre**, "Particle Dynamics in a Dielectrophoretic Microdevice," paper 3.2, Proceedings of the 12th International Symposium on the Application of Laser Techniques to Fluid Mechanics, (Lisbon, Portugal), July 12-15, 2004.
63. **D. Liu, S.V. Garimella, and S.T. Wereley**, "Infrared Micro-Particle Image Velocimetry of Fluid Flow in Silicon-Based Microdevices," ASME Heat Transfer/Fluids Engineering Summer Conference (Charlotte, NC), paper number: HT-FED2004-56385, July 2004.
62. **H.A. Diefes-Dux, P.K. Imbrie, K. Haghighi, G.U. Lee, S.T. Wereley, and P. Wankat**, "Nanotechnology Exposure in a First-Year Engineering Program," International Conference on Engineering Education and Research (Olomouc and Bouzov Castle, Czech Republic, June 27-30, 2004).
61. **S.T. Wereley**, "Microfluidic Diagnostics applied to Cold Gas Thruster Design and Analysis," ESA 4th International Spacecraft Propulsion Conference (Cagliari, Italy, June 2-4, 2004).
60. **S.T. Wereley, I. Whitacre, R. Bashir and H.B. Li**, "DEP Particle Dynamics and the Steady Drag Assumption," Nanotech 2004 (Boston, March 7-11, 2004).
59. **J. Jang and S. T. Wereley**, "A Capacitive Micro Gas Flow Sensor Based on Slip Flow," IEEE-MEMS 2004 (Maastrict, The Netherlands, January 25-29, 2004).
58. **S.T. Wereley, I. Whitacre, R. Bashir and H.B. Li**, "DEP Particle Dynamics and the Steady Drag Assumption," Amer. Phys. Soc./Div. Fluid Dyn. Annual Meeting, (East Rutherford, NJ, Nov. 2003).
57. **J. Cao and S.T. Wereley**, "The role of Brownian motion in fluid/particulate experiments," Proc. ASME/IMECE, Paper #2003-43360, (Washington, DC, Nov. 2003).
56. **S.Y. Lee and S.T. Wereley**, "Pressure Measurement in the Microchannel using Air Compression," Proc. ASME/IMECE, Paper #2003-41163, (Washington, DC, Nov. 2003).
55. **J. Jang and S.T. Wereley**, "Slip Flow Analyses of Capacitive Pressure-Based Micro Flow Sensor," Proc. ASME/IMECE, Paper #2003-41142, (Washington, DC, Nov. 2003).
54. **G.U. Lee and S.T. Wereley**, "Teaching Nanoscience and Engineering at an Intermediate Level,"American Institute of Chemical Engineers Annual Meeting (San Francisco, CA), Nov. 16-21, 2003.
53. **S. Stone, C. D. Meinhart and S. T. Wereley**, "Out of plane spatial resolution of volume illumination PIV using a compound lens system," 5th International Symposium on Particle Image Velocimetry, (Pusan, Korea, Sept. 2003).
52. **Y. H. Kim, S. T. Wereley and C. H. Chun**, "Flow field produced by a vibrating cantilever plate in various geometries," 5th International Symposium on Particle Image Velocimetry, (Pusan, Korea, Sept. 2003).
51. **M.W. Eckerle, C.E. Nyquist, R.L. Schlipf, K. Haghighi, S.T. Wereley**, "Finite Element Modeling of a Micro-Scale Resonant Fan for Microfluidic Transport," ASAE Annual International Meeting, Paper 033098 (Las Vegas, NV, July 2003).

50. **J.Jang, Y. Zhao, and S.T. Wereley**, "Pressure Distributions and TMAC Measurements in Near-Unity Aspect Ratio, Anodically Bonded Microchannels," MEMS 2003, (Kyoto, Japan, Jan. 2003).
49. **S.T. Wereley and I. Whitacre (*invited*)**, "Velocity Averaging from Out of Plane Gradients in micro-PIV," Paper 2003-0782, American Institute of Aeronautics and Astronautics Annual Meeting, Reno, NV, Jan. 2003.
48. **C.H. Chung and S.T. Wereley**, "Numerical Simulation of Low- Speed Gas Flows in Microchannels," Paper 2003-0860, American Institute of Aeronautics and Astronautics Annual Meeting, Reno, NV, Jan. 2003.
47. **C.H. Chung and S.T. Wereley**, "Analysis of Gas Flows in Microchannels with Small Pressure Difference," Paper 2003-0861, American Institute of Aeronautics and Astronautics Annual Meeting, Reno, NV, Jan. 2003.
46. **S.T. Wereley, S.Y. Lee, and L.C. Gui**, "Entrance Length and Turbulence Transition in Microchannels," Amer. Phys. Soc./Div. Fluid Dyn. Annual Meeting, Dallas, TX, Nov. 2002.
45. **S. Stone, C.D. Meinhart, and S.T. Wereley**, "Out of plane spatial resolution of volume illumination PIV," Amer. Phys. Soc./Div. Fluid Dyn. Annual Meeting, Dallas, TX, Nov. 2002.
44. **C.H. Chung and S.T. Wereley**, "Computation of Rerefied Gas Flows in Microchannels," JSME/KSME Fluids Engineering Conference (Nagoya, Japan, Nov. 2002).
43. **J. Jang, Y. Zhao, S.T. Wereley, and L.C. Gui**, "Mass Flow Measurements of Gases in Deep-RIE Microchannels," Proc. ASME/IMECE, Paper #2002-33779, (New Orleans, LA, Nov. 2002).
42. **S.Y. Lee, S.T. Wereley, L.C. Gui, W.L. Qu, and I. Mudawar**, "Microchannel Flow Measurement using Micro Particle Image Velocimetry," Proc. ASME/IMECE, Paper #2002-33682, (New Orleans, LA, Nov. 2002).
41. **S.T. Wereley and G.U. Lee**, "Teaching Nanotechnology/Nanoscience Across Disciplines," American Institute of Chemical Engineers Annual Meeting (Indianapolis, IN), Nov. 3-8, 2002.
40. **Eric Tkaczyk, Vandna Handa, Sangwoo Lee, Helen McNally, Lichuan Gui, Steve Wereley, Rashid Bashir,** "Determination Of The Charge Attached To Micro-Scale Devices Used In Fluidic Self-Assembly Processes", MRS Fall Meeting (Boston, MA) 2002.
39. **S.T. Wereley (*invited*)**, "Microfluidic manipulation of particles, cells, viruses, and molecules," BioMEMS and biomedical nanotechnology WORLD 2002, (Columbus, OH), Sept. 6-8, 2002.
38. **C.D. Meinhart, S. Stone, D. Tretheway, S.T. Wereley**, "Spatial Resolution Limits of Micron Resolution Particle Image Velocimetry," Proceeding of the Seiken Symposium on Particle Image Velocimetry (Tokyo, Japan), p. 57-71, August 23, 2002.
37. **S.T. Wereley and V.P. Hohreiter**, "Simultaneous, Spatially-Resolved Temperature and Velocity Measurements Using Cross-Correlation PIV," paper 15.1, Proceedings of the 11th International Symposium on the Application of Laser Techniques to Fluid Mechanics, (Lisbon, Portugal), July 8-11, 2002.
36. **L. Gui, S.T. Wereley and S.Y. Lee**, "Digital Filters for Reducing Background Noise in Micro PIV Measurements," paper 12.4, Proceedings of the 11th International Symposium on the Application of Laser Techniques to Fluid Mechanics, (Lisbon, Portugal), July 8-11, 2002.
35. **S.T. Wereley, V. Hohreiter, J. Chung**, "Simultaneous, spatially-resolved temperature and velocity measurements in microchannel flows," THERMES 2002: Thermal Challenges in Next Generation Electronic Systems, (Santa Fe, NM), January 13-16, 2002.
34. **Y.H. Kim, S.T. Wereley, C.H. Chun**, "Experimental study on the flow field around a vibrating cantilever plate," Amer. Phys. Soc./Div. Fluid Dyn. Annual Meeting, San Diego, CA, Nov. 2001.
33. **S.T. Wereley, V. Hohreiter, J.N. Chung**, "Simultaneous Temperature and Velocity Measurement," Amer. Phys. Soc./Div. Fluid Dyn. Annual Meeting, San Diego, CA, Nov. 2001.
32. **S. Stone, C.D. Meinhart, S.T. Wereley,** "Using Particle Image Velocimetry to Probe Wall Shapes with Nanoscope Resolution," Amer. Phys. Soc./Div. Fluid Dyn. Annual Meeting, San Diego, CA, Nov. 2001.
31. S.T. Wereley, C.D. Meinhart, S. Stone, V. Hohreiter, and J. Chung, Proc. SPIE Int. Soc. Opt. Eng., Vol. 4558, pp. 124-132 (San Francisco, Oct. 2001).
30. **V. Hohreiter, S.T. Wereley, J.N. Chung, M.G. Olsen**, "Cross-correlation analysis for temperature measurement," 4th International Symposium on Particle Image Velocimetry, Paper 1145, Göttingen, Germany, Sept. 2001.
29. **S.T. Wereley and L.C. Gui**, "PIV measurement in a four-roll-mill flow with a central difference image correction (CDIC) method," 4th International Symposium on Particle Image Velocimetry, Paper 1027, Göttingen, Germany, Sept. 2001.

28. **S. Stone, C.D. Meinhart, S.T. Wereley**, "Using μ-PIV to Probe Wall Shapes with Nanoscope Resolution," 4th International Symposium on Particle Image Velocimetry, Paper 1143, Göttingen, Germany, Sept. 2001.
27. **S.T. Wereley, C.D. Meinhart, S. Stone, V. Hohreiter, J. Chung**, "A Microfluidic MEMS Characterization Toolbox," International MEMS Workshop 2001, pp. 244-253, Singapore, July 2001.
26. **S.T. Wereley**, "Experiments and Simulations in Micro/Nano Domains," ASME Information Storage and Processing Systems Conference, Santa Clara, CA, June 2001.
25. **S.T. Wereley, L.C. Gui, and C.D. Meinhart (*invited*)**, "Flow Measurement Techniques for the Microfrontier," Paper 2001-0243, American Institute of Aeronautics and Astronautics Annual Meeting, Reno, NV, Jan. 2001.
24. **C.D. Meinhart and S.T. Wereley (*invited*)**, "Fluid Mechanics Issues at the Microscale," Paper 2001-0720, American Institute of Aeronautics and Astronautics Annual Meeting, Reno, NV, Jan. 2001.
23. **S.T. Wereley, H. Apple, R. Gomez, R. Bashir**, "Microfluidic Biomedical Device Characterization," Amer. Phys. Soc./Div. Fluid Dyn. Annual Meeting, Washington, DC, Nov. 2000.
22. **C.D. Meinhart, S.W. Stone, and S.T. Wereley**, "A microfluidic-based nanoscope," ICTAM 2000 (Chicago, IL), paper GV-13, Aug. 2000.
21. **S.T. Wereley and C.D. Meinhart**, "Accuracy Improvements in Particle Image Velocimetry Algorithms," paper 13.4, Proceedings of the 10th International Symposium on the Application of Laser Techniques to Fluid Mechanics, (Lisbon, Portugal), July 10-13, 2000.
20. **C.D. Meinhart, S. Stone, and S.T. Wereley**, "A Microfluidic-based Nanoscope," Proc. μTAS2000, pp. 83-86, Enschede, The Netherlands, May 2000.
19. **S.T. Wereley, C.D. Meinhart, and M.H.B. Gray**, "Depth Effects in Volume Illuminated PIV," Amer. Phys. Soc./Div. Fluid Dyn. Annual Meeting, New Orleans, LA, Nov. 1999.
18. **S.T. Wereley, C.D. Meinhart, M.H.B. Gray**, "Depth Effects in Volume Illuminated Particle Image Velocimetry," pp. 545-550, The Third International Workshop on Particle Image Velocimetry, Santa Barbara, CA, Sept. 1999.
17. **C.D. Meinhart, S.T. Wereley, and J.G. Santiago**, "A PIV Algorithm for Estimating Time-Averaged Velocity Fields," presented at the Symposium on Optical Methods and Image Processing in Fluid Flow ASME/JSME Fluids Engineering Conference, San Francisco, CA, July 18-23, 1999.
16. **Meinhart CD, Gray MHB, Wereley ST** "PIV Measurements of High-speed flows in Silicon-micromachined nozzles," (AIAA/ASME/SAE/ASEE 35th Joint Propulsion Conference and Exhibit, Los Angeles, CA, June 20-24, 1999) AIAA 99-3756.
15. **R.M. Lueptow and S.T. Wereley**, "Particle Distribution in Rotating Filtration," Proc. Amer. Filtration Soc., (Advances in Filtration and Separation Technology, Boston), Vol. 13, 252-259, 1999
14. **S.T. Wereley, C.D. Meinhart, J.G. Santiago, and R.J. Adrian**, "Velocimetry for MEMS Applications," Proc. ASME/DSC, Vol. 66, 453-459, (Micro-fluidics Symposium, Anaheim, CA, Nov. 1998).
13. **S.T. Wereley, C.D. Meinhart, and J.G. Santiago**, "Microfluidic PIV: Algorithms and Experiments," Amer. Phys. Soc./Div. Fluid Dyn. Annual Meeting, Philadelphia, PA, Nov. 1998.
12. **J.G. Santiago, S.T. Wereley, C.D. Meinhart, D.J. Beebe, and R.J. Adrian**, "A Micron-Resolution Particle Image Velocimetry System for Microfluidics," 8th International Symposium on Flow Visualization (Sorrento, Italy), Aug. 1998.
11. **C.D. Meinhart, J.G. Santiago, S.T. Wereley, and R.J. Adrian, "**Diagnostic techniques for microfluids research," Proceedings of the 9th International Symposium on the Application of Laser Techniques to Fluid Mechanics, (Lisbon, Portugal) paper 6.4 (1998).
10. **J.G. Santiago, C.D. Meinhart, D.J. Beebe, S.T. Wereley, and R.J. Adrian**, "Velocimetry for Microfluidics," Solid State Sensor and Actuator Workshop (Hilton Head, SC), June 1998.
9. **S.T. Wereley, J.G. Santiago, R. Chiu, C.D. Meinhart, and R.J. Adrian**, "Micro-resolution particle image velocimetry," Proc. SPIE, Vol. 3258, pp. 122-133 (Micro- and Nano-Fabricated Structures and Devices for Biomedical Environmental Applications, San Jose, CA, Jan. 1998).
8. **S.T. Wereley and R.M. Lueptow**, "Particle Motion in a Taylor-Couette Filter Device," Amer. Phys. Soc./Div. Fluid Dyn. Annual Meeting, San Francisco, CA, Nov. 1997.
7. **S.T. Wereley and R.M. Lueptow**, "Particle motion in Taylor Couette flow," Proc. ASME/OED Intnl. Cong. Sym., Vol 1, pp. 73-80, 1997.
6. **S.T. Wereley and R.M. Lueptow**, "Velocity Field in Wavy Circular Couette Flow," Proc. 10th Int. Couette-Taylor Workshop, July 1997.
5. **S.T. Wereley and R.M. Lueptow**, "Mixing in Wavy Taylor Vortex Flow," Amer. Phys. Soc./Div. Fluid Dyn. Annual Meeting, Nov.1996.

4. **S.T. Wereley and R.M. Lueptow**, "Velocity Field in Wavy Vortex Flow," Amer. Phys. Soc./Div. Fluid Dyn. Annual Meeting, Nov. 1995.
3. **S.T. Wereley, S.A. Labhsetwar, and R.M. Lueptow**, "Wavy Taylor Vortex Flow: Experimental Velocity Vectors," Gallery of Fluid Motion at the 48th Annual Meeting of the APS/DFD, Nov. 1995.
2. **S.T. Wereley and R.M. Lueptow**, "Measurements of Velocity Fields with Application to Two-Phase Flow in a Taylor-Couette Separator," Proc. 9th Int. Couette-Taylor Workshop, Boulder, CO, Aug. 1995.
1. **S.T. Wereley, R.M. Lueptow, and K. Min**, "An LDV Investigation of the Taylor Vortex Phenomenon," Amer. Phys. Soc./Div. Fluid Dyn. Annual Meeting, Tallahassee, FL, Nov. 1992.

University/Corporate Invited Seminars

67. Optoelectric Micro/Nano Particle and Droplet Manipulation, presented at Northwestern University, Nov 8, 2012.
66. PIV Overview, Graduatekolleg GRK1114 seminar days, Kleinwalsertal, Austria, Jun 18-20, 2012.
65. Analyzing Disaster: How big was the Deepwater Horizon disaster?, presented at the Culver Academies, May 24, 2012.
64. Optoelectric Micro/Nano Particle and Droplet Manipulation, presented at Purdue Calumet, Water Institute, Sep 20, 2011.
63. What can we learn about PIV Uncertainty from the correlation shape?, presented at the PIV Uncertainty Workshop, Las Vegas, NV, May 11-13, 2011.
62. Optoelectric Micro/Nano Particle and Droplet Manipulation, presented at Virginia Tech, Apr 27, 2011.
61. Using HUBzero to Distribute and Enable Analysis of Deepwater Horizon Oil Spill Videos, Hubzero Workshop, IUPUI, Apr 5 2011.
60. Optoelectric Micro/Nano Particle and Droplet Manipulation, presented at Stanford University, Oct 26, 2010.
59. Assessing Disaster: How much oil flowed from BP's Macondo well? presented at Stanford University, Oct 27, 2010.
58. Temperature and Particle Sizing using Brownian Motion, presented at International Symposium on Micro/Nano Flow Measurement Techniques, Tokyo, Sept 2010.
57. Optoelectric Micro/Nano Particle and Droplet Manipulation, presented at The Ohio State University, Feb 26, 2010.
56. Opto-Electro Particle Manipulation and Diagnostics, presented at the Danish Technical University, Copenhagen, Denmark, Sept. 22, 2009.
55. Opto-Electro Particle Manipulation and Diagnostics, presented at the University of Alberta, Edmonton, Alberta, Canada, Sept. 13, 2009.
54. Flow Diagnostics and Optoelectric Micro/Nano Particle Manipulation, presented at the DFG Priority Program SPP 1164 Nano- & Microfluidics, Bad Honnef, Germany, July 30, 2009.
53. Flow Diagnostics and Optoelectric Micro/Nano Particle Manipulation, presented at Deutsche Zentrum für Luft- und Raumfahrt (DLR), Cologne, Germany, July 29, 2009.
52. Flow Diagnostics and Optoelectric Micro/Nano Particle Manipulation, presented at Technische Universität Braunschweig, Braunschweig, Germany, July 13, 2009.
51. Flow Diagnostics and Optoelectric Micro/Nano Particle Manipulation, presented at Universität des Saarlandes, Saarbrücken, Germany, July 7, 2009.
50. Flow Diagnostics and Optoelectric Micro/Nano Particle Manipulation, presented at Yonsei University, Seoul, Korea, June 26, 2009.
49. Flow Diagnostics and Optoelectric Micro/Nano Particle Manipulation, presented at Korea Institute of Science and Technology (KIST), Seoul, Korea, June 25, 2009.
48. Flow Diagnostics and Optoelectric Micro/Nano Particle Manipulation, presented at Chung-Ang University, Seoul, Korea, June 25, 2009.
47. Flow Diagnostics and Optoelectric Micro/Nano Particle Manipulation, presented at NYU-Poly, New York, NY, on Feb. 27, 2009.
46. Flow Diagnostics and Optoelectric Micro/Nano Particle Manipulation, presented at Columbia University, New York, NY, on Feb. 26, 2009.
45. Flow Diagnostics and Optoelectric Micro/Nano Particle Manipulation, presented at Stevens Institute of Technology, Hoboken, NJ, on Feb. 25, 2009.
44. Optoelectric Micro/Nano Particle Manipulation, presented at Indian Institute of Technology Madras, India, on Dec. 10, 2008.

43. **Optoelectric Micro/Nano Particle Manipulation**, presented at University of Southampton, Southampton UK, on Oct. 30, 2008.
42. **Optoelectric Micro/Nano Particle Manipulation**, presented at Rutgers University, New Brunswick, NJ, on Oct. 22, 2008.
41. **Flow Diagnostics for Micro/Nano Device Characterization**, presented at Technische Universität Braunschweig, Braunschweig, Germany, on Aug. 14, 2007.
40. **Flow Diagnostics for Micro/Nano Device Characterization**, presented at Universität Heidelberg, Heidelberg, Germany, on July 18, 2007.
39. **Flow Diagnostics for Micro/Nano Device Characterization**, presented at Universität Rostock, Rostock, Germany, on June 29, 2007.
38. **Microfluidics and suitable diagnostic techniques**, presented at Deutsche Zentrum für Luft- und Raumfahrt (DLR), Göttingen, Germany, on June 8, 2007.
37. **What Can We Learn From Diffusion in Microfluidics?**, presented at Johns Hopkins University, Baltimore, MD, Jan. 26, 2007.
36. **Manipulation and detection of nanoparticles using light**, Tools for Nano Engineering (ARO Workshop), Purdue University, Oct. 2-4, 2006.
35. What is "Nanofluidics"? or The Nano-izing of Fluid Mechanics, NCN nano-tutorial seminar series, Purdue University, Feb. 20, 2006.
34. **Micro/Nano Fluidics: fundamentals and devices**, presented in S.C. Johnson and Sons Science and Engineering Council, Racine, WI, Feb. 15, 2006.
33. **Introduction to Microfluidics**, presented at the CAMD / CBM2 2005 Summer Workshop, Louisiana State University, Baton Rouge, LA, July 25, 2005.
32. **Micro and Nanoscale Flow Diagnostics**, presented at University of Karlsruhe, Karlsruhe, Germany, April 12, 2005.
31. **Micro and Nanoscale Flow Diagnostics**, presented at Alberts-Ludwig University, Freiburg, Germany, April 13, 2005.
30. **Micro and Nanoscale Flow Diagnostics**, presented at Technical University of Darmstadt, Darmstadt, Germany, April 14, 2005.
29. **Experimental Microfluidics**, presented at Samsung Advanced Institute of Technology, Suwon, South Korea, Sept. 17, 2003.
28. **Experimental Microfluidics**, presented at POSTECH University, Pohang, South Korea, Sept. 18, 2003.
27. **Experimental Diagnostics for Microscale Sensor and Actuator Evaluation**, presented at AFRL Microfluidics Workshop, Los Angeles, CA, May 12, 2003.
26. **Microfluidics of Biomedical Microdevices**, presented at Baxter Healthcare, Round Lake, IL, April 25, 2003.
25. **Algorithm Improvements for Micro-PIV**, presented at TSI, Inc., Minneapolis, MN, April 7, 2003.
24. **Fluid Mechanics in Micro and Nano Domains**, presented at ARO Nanotechnology Workshop, Chicago, IL, Nov. 14, 2002.
23. **Fluid Mechanics and Heat Transfer Research at Purdue**, presented at Schlumberger Mechanical Eureka Community: Mechanical Systems, Dynamics & Design Seminar, Paris, Oct. 1-3 2002.
22. **Experimental Microfluidic Diagnostics and Educating Students and Professionals About Microfluidics**, AIAA Microfluidics Panel Discussion, AIAA Conference, St. Louis, MO, June 26, 2002.
21. **Characterization of Thermo-fluid Processes at MEMS level and the potential use of x-rays**, presented at Argonne National Laboratory, Chicago, IL, March 1, 2002.
20. **Physics Choices**, presented in Dept. of Physics Undergrad Lecture Series, Purdue University, Jan. 22, 2002.
19. **Microfluidic Diagnostic Techniques**, presented in the Civil Engineering Dept., Purdue University, October 2001.
18. **Experiments and Simulations in Micro/Nano Domains**, Data Storage Institute, Singapore, July 2001.
17. **Experiments and Simulations in Micro/Nano Domains**, Seagate Corp., Singapore, July 2001.
16. **Microfluidic Diagnostic Techniques**, presented in the Mechanical Engineering Dept., Nanyang Technological University, Singapore, July 2001.
15. **Experiments and Simulations in Micro/Nano Domains**, National Storage Industry Consortium Annual Meeting, Monterrey, CA, June 2001.
14. **Fluid Measurements in Micro/Nano Domains**, presented at The Colorado Center for Information Storage/Denver Section of the IEEE Magnetics Society seminar series, Boulder, CO, Jan. 2001.
13. **Microfluidic Diagnostic Techniques**, presented in the Mechanical Engineering Dept., Indiana University and Purdue University at Indianapolis (IUPUI), Indianapolis, IN, Nov. 2000.

12. **Microfluidic Diagnostic Techniques**, presented in the Materials Engineering Dept., Purdue University, West Lafayette, IN, Sept. 2000.
11. **Microfluidic Diagnostic Techniques**, presented at the Purdue University Nanotechnology Seminar Series, Purdue University, West Lafayette, IN, Sept. 2000.
10. **Microfluidics: Theory and Experiment,** presented in the "All-Day MEMS overview," University of Illinois, Chicago, IL, Aug. 2000.
9. **Microfluidic Diagnostic Techniques**, presented at Daimler-Chrysler, Ulm, Germany, July, 2000.
8. **Microfluidic Diagnostic Techniques**, presented at the Paul-Scherrer Institut Laboratory for Micro- and Nanotechnology, Villigen, Switzerland, July, 2000.
7. **Microfluidic Diagnostic Techniques**, presented at 3M, Minneapolis, MN, June, 2000.
6. **MEMS: A brief introduction**, presented in the Monticello Business Forum seminar titled "Technologies of the 21st Century and How to Incorporate Them," Monticello, IN, May, 2000.
5. **Fluid Flow in Microscale Domains-Experiments and Analysis**, presented in the Applied Math Seminar Series, Math Department, Purdue University, West Lafayette, IN, Apr. 2000.
4. **Enhanced Micro-PIV**, presented in the Turbulence and Complex Flow Seminar Series, Theoretical and Applied Mechanics Department, University of Illinois, Urbana-Champaign, Feb. 2000.
3. **Microfluidic Diagnostic Techniques**, presented in the Mechanical Engineering Department Lecture Series at the University of Florida, Gainesville, FL, Dec. 1999.
2. **Microfluidic Diagnostic Techniques**, presented in the Society for the Advancement of Material and Process Engineering (SAMPE) Micro-Nano Scale Science and Technology Seminar Series, Purdue University, W. Lafayette, IN, Oct. 1999.
1. **Shear Field and Velocity Field in Taylor Vortex Flow**, presented at Baxter HealthCare, Fenwal Division, Round Lake, IL, Oct. 1996.

Funding History

Hummingbird, Inc., Environmental Cells for Transmission Electron Microscopy (TEM), Two years (2010-2011), $225,000.
NSF:ERC for Compact and Efficient Fluid Power, Two (2) years (2006-2008), $5,000,000, $80,076
Cummins, Inc.:Proposal for Characterizing Fuel Contaminant Size and Type Two (2) years (2007-2009) $223,666.
NSF:Experiments and Modeling of Advanced Optical Trap Systems for Manipulating and Sorting Micro and Nano Particles, Three (3) years (2007-2010), $212,453
NSF:Collaborative Research: Architecture and Prototype for a Programmable Lab-on-a-Chip, Three (3) years (2007-2009), $315,000, $142,893
DARPA: Micro/Nano Fluidics Fundamentals Focus Center (UCI/MF3), Three (3) years (2007-2010), $150,919
AudioPixels, Inc.:Proposal for micro-PIV measurements to Audiopixels, One (1) year (2009-2010), $34,607
National Aeronautics and Space Administration (Bionetics Corp./NASA), "Microfluidic Ion Sensor Array," 2/7/2005 to 9/30/2006, *Total award: $140k, my portion: $70k.*
Air Force Office of Scientific Research, "STTR: High-resolution evanescent PIV for near-wall microfluidics," 9/15/2004 to 6/30/2005, *Total award: $75k, my portion: $42k.*
National Science Foundation, "Scaling down mechanically driven fluidic self-assembly," 8/15/2004 to 1/31/2006, *Total award: $50k.*
Cooling Technologies Research Center (NSF/Industry consortium), "Heat transport in Microchannels," 1/1/2004 to 12/31/2006, *Total award: $115k, my portion: $57k.*
Lilly retention initiatives, "Nanofact/Nanofiction honors class," 1/1/2004 to 5/31/2004, *Total award: $10k, my portion: $5k.*
21st Century Research and Technology Fund—"Novel MEMS-Based Microscale Cooling System for the Thermal Management of Integrated Microelectronics," 2004 to 2006, *Total award: $1922k, my portion $39k.*
National Science Foundation, DMI Materials Processing/Manufacturing, "GOALI: Improvements spray drying manufacturing through control of drop size distributions," 9/15/2003 to 8/31/2006, *Total award: $389k, my portion: $130k.*
TSI, Inc., "PIV algorithm improvements for TSI's Insight," 2003 to 2004, *Total award: $10k.*
National Science Foundation, Nanoscale Undergraduate Education, "NUE: New Learning and Discovery Experiences in Nanoscale Engineering Undergraduate Education," 2003 to 2004, *Total award: $100k, my portion: $19k.*

Purdue Research Foundation—"Interplay of Randomness and Determinism in Micro/Nanoflows," 2003 to 2005, *Total award: $13k.*
National Science Foundation, "SGER: Development of a multiscale manufacturing teaching laboratory," 2003 to 2004, *Total award: $100k, my portion: $17k.*
National Science Foundation, Nanoscale Science and Engineering, Nanoscale Exploratory Research— "Explorations in Biomedical Microdevices: Brownian Motion and Education," 2002 to 2003, *Total award: $100k, my portion $89k.*
National Science Foundation, Biological Oceanograpy—"Form and Function of Phytoplankton in unsteady, low Reynolds-Number Flows," 9/1/2002 to 8/31/2006, *Total award: $970k, my portion $208k.*
Showalter Trust, "Towards the prevention and control of atherosclerosis: endothelial and smooth muscle cell response to pulsatile flow in stenotic blood vessels," 2001 to 2002, *Total award: $83k, my portion: $16.6k*.
Naval Surface Warfare Center Crane Division (Purdue University Center for Sensing Science and Technology)—"Integrated Detection of Hazardous Materials," 2001 to 2003, *Total award: $4000k, my portion $70k.*
21st Century Research and Technology Fund—"Center for Nanoscale Electronics/Biological Devices," 2000 to 2002, *Total award: $1480k, my portion $49k.*
21st Century Research and Technology Fund—"Intelligent MEMS-based Flow Sensors and Controllers," 2000 to 2002, *Total award: $816k, my portion $271k.*
Purdue Research Foundation—"Experimental Investigation of Prototypical MEMS Pumps," 2000 to 2002, *Total award: $13k.*
3M Nontenured Faculty Award—support for untenured faculty in the pursuit of basic research in the physical and/or biological sciences, 2/24/2000, *Total award: $39k*.
ATC, Inc., unrestricted gift funding in support of research on micro-scale mass flow transducers, 12/30/1999, *Total award: $27K*.

Short Courses

Principles and Applications of Micro and Nanofluidics, Center for Smart Interfaces, Darmstadt, Germany; offered twice—Mar 22-24, 2010 and Dec 14-16, 2011.
Microfluidics, April 26-28, 2004, Los Angeles, CA. ASME sponsored 3 day short course in which I taught one half day on the theory of flows at small length scales.
Fundamentals and Applications of Microfluidics, half day short course offered at ESA's Space Propulsion 2004, Cagliari, Italy, June 2-9, 2004.
Microfluidics, April 26-28, 2004, Los Angeles, CA. ASME sponsored 3 day short course in which I taught one half day on the theory of flows at small length scales.
Fundamentals and Applications of Micro/Nanofluidics, 3 hour short course offered at *Nanotech 2004*, in Boson, March 7-11, 2004.
Fundamentals and Applications of Micro/Nanofluidics, 3 hour short course presented at the *Nanotech 2003*, in San Francisco, Feb. 23-27, 2003. Topics addressed: theoretical background of micro/nano-scale fluid mechanics, modeling methods, practicalities of small-scale flows, experimental characterization techniques.
Microfluidics, half-day short course presented at the *International MEMS Workshop 2001*, in Singapore, July 4-6, 2001. Co-taught with Dr. Nam-Trung Nguyen, Nanyang Technical University, Singapore. Topics addressed: theoretical background of micro-scale fluid mechanics, experimental characterization techniques for microflows, fabrication technologies of microfluidic devices, and typical microfluidic applications.

Awards and Memberships

2nd Place, Gold Division, Burton D. Morgan Business Plan Competition, company name PathVis, now OmniVis, 2017.
Purdue Innovator Hall of Fame inductee (2016)
United States Geological Survey Director's Award for meritorious service to the nation during the Deepwater Horizon oil spill (2010).
3rd Prize, ASME-IMECE Society-Wide Micro/Nano Technology Forum Best Poster Competition, HS Chuang, A Kumar, and ST Wereley, "Rapid Electrokinetic Patterning Of Colloidal Particles With Optical Landscapes", Lake Buena Vista, Florida, 2009
Alexander von Humboldt Fellow (3/2007-8/2007; 6/2008-7/2008; 6/2009-7/2009)
1st Place, Gold Division, Burton D. Morgan Business Plan Competition. Ahmed M. Amin, S.C. Jacobson, M. Thottethodi, T.N. Vijaykumar and S.T. Wereley. "Microfluidic Innovations." Purdue University, West Lafayette, IN, February 2009.

2nd Place, Gold Division, Burton D. Morgan Business Plan Competition. SJ Williams, H.-S. Chuang and A Kumar. Liquid Qinetics. Purdue University, West Lafayette, IN, Feb. 24, 2009.
1st Place Poster, Engineering Sciences, SJ Williams, A Kumar, and ST Wereley, "Rapid electrokinetic patterning of colloids using optical landscapes", 2009 Graduate Student Poster Competition sponsored by Sigma Xi, Purdue University, West Lafayette, IN, Feb. 2009.
3rd Place, 2008 Ecological Science and Engineering Poster Competition. H.-S. Chuang and Steven T. Wereley. "Open Optolelectrowetting Droplet Actuation for Lab-on-a-Chip Applications." Dec. 5, 2008.
Outstanding Video, Gallery of Fluid Motion at Amer. Phys. Soc./Div. Fluid Dyn. Annual Meeting, SJ Williams, A Kumar, and ST Wereley, "Optically induced electrokinetic pattering and manipulation of particles," San Antonio, TX, Nov. 2008. *Note*: Most downloaded video from eCommons@Cornell for the month of December, 2008. (http://hdl.handle.net/1813/11399)
"2008 Highlight" distinction conferred by the journal Measurement Science and Technology to the article "Three-dimensional particle tracking using micro-particle image velocimetry hardware" by Peterson, Chuang, and Wereley.
Young Researcher Poster Award Winner at Proc. 12th International Conference on Miniaturized Systems for Chemistry and Life Sciences (µTAS 2008), A Kumar, SJ Williams and ST Wereley, "Rapid electrokinetic patterning of colloids using optical landscapes", San Diego, USA, Oct 12-16, 2008.
Best Poster Award at the 2nd Annual Birck Nanotechnology Research Review, S. Williams, A. Kumar, and S.T. Wereley, "Rapid electrokinetic patterning of colloidal particles with optical landscapes," April 14, 2008.
21st Annual Purdue University Burton Morgan Business Plan Competition, 4th place, A. Amin, H.S. Chuang, T.N. Vijaykumar, T. Thodentoddi, S.T. Wereley, and S. Jacobson, developed a business plan for commercializing programmable Lab-on-a-Chip devices.
Seeds for Success Award (1/2007)—awarded for proposals funded in excess of one million dollars
3M Nontenured Faculty Award (3/2000, 3/2001, 3/2002)—support for untenured faculty in the pursuit of basic research in the physical and/or biological sciences.
Walter Murphy Fellowship (9/1990)—support for outstanding graduate students
Pi Tau Sigma *Mechanical Engineering Honor Society*: student member (4/89); faculty advisor (4/99-present)
American Physical Society (APS)
American Society of Mechanical Engineers (ASME)
American Institute of Aeronautics and Astronautics (AIAA)

Guest Class Lectures

Microscale Heat and Fluid Flow Diagnostics, ME 605, *Convection of Heat and Mass*, Professor Jayathi Murthy, Dec. 2003.
Fundamentals of Microfluidics, EE 595B, *Fundamentals of MEMS and Micro-Integrated Systems*, Professor Rashid Bashir, Oct., 2003.
An Introduction to Nanotechnology, ENGL373, *Science Fiction and Fantasy*, Prof. Kristina Bross, Feb. 2003.
Fundamentals of Microfluidics, EE 595B, *Fundamentals of MEMS and Micro-Integrated Systems*, Professor Rashid Bashir, Oct., 2002.
The Benefits of a Physics Education in Mechanical Engineering, PHYS 290A, *Seminar in Careers in Physics*, Professor Andrew Hirsch, Jan. 2002.
Microscale Heat and Fluid Flow Diagnostics, ME 605, *Convection of Heat and Mass*, Professor Suresh Garimella, Apr. 2001.
Fundamentals of Microfluidics, EE 595B, *Fundamentals of MEMS and Micro-Integrated Systems*, Professor Rashid Bashir, Feb., 2001.
Microscale Fluid Flow Diagnostics, ME 509, *Intermediate Fluid Dynamics*, Professor Steve Frankel, Dec. 2000.
Microscale Fluidic Actuation, ME 610, *Boundary Layer Theory*, Professor Mike Plesniak, Apr., 2000.
Microscale Pumping Schemes, EE 595B, *Fundamentals of MEMS and Micro-Integrated Systems*, Professor Rashid Bashir, Apr., 2000.
Math and Science in Tom Stoppard's Arcadia, ENGL 201, *The Nature of Literary Study*, Professor Kristina Bross, Apr., 2000.
Fundamentals of Microfluidics, EE 595B, *Fundamentals of MEMS and Micro-Integrated Systems*, Professor Rashid Bashir, Feb., 2000.
Some thoughts on the science in Tom Stoppard's Arcadia, THTR 570, *Dramatic Structure and Literature*, Professor Anne Fliotsos, Feb., 2000.

Microscale Fluid Flow Diagnostics, ME 509, *Intermediate Fluid Dynamics*, Professor Carl Wassgren, Dec. 1999.

Conference Sessions Chaired *current through 2002*

Biomedical Flows: 11th International Symposium on the Application of Laser Techniques to Fluid Mechanics, (Lisbon, Portugal), July 8-11, 2002.
Challenges in Micro and Nanoscale Transport: THERMES 2002: Thermal Challenges in Next Generation Electronic Systems, (Santa Fe, NM), January 13-16, 2002.
BioMEMS & Microfludic & MEMS/MST Sensor Applications: International MEMS Workshop, (Singapore), July 4-6, 2001.
Micro-Fluid Dynamics II: American Physical Society/Division of Fluid Dynamics Annual Meeting, (Washington, D.C.), Nov.19-21, 2000.
Aerodynamic Flows – 2: 10th International Symposium on the Application of Laser Techniques to Fluid Mechanics, (Lisbon, Portugal), July 10-13, 2000.
Interrogation Algorithms, The Third International Workshop on Particle Image Velocimetry (Santa Barbara, CA), Sept. 12-14, 1999.

Journal Reviews

AIAA Journal, AIChE Journal, J. Fluids Engineering, J. Micromechanics and Microengineering, Physics of Fluids, Experiments in Fluids, J. Fluid Mechanics, …

Courses Taught

ME697W: Micro/Nano Fluid Mechanics: Fa05, Fa08
ENGR195N: Special Topics in Nanotechnology Research Experiences: Sp04 (team taught with Freshman Eng.)
HONR199C: Nanofact/Nanofiction: Sp04 (co-taught with K. Bross, ENGL)
ME263: Introduction to Mechanical Engineering Design: Sp01
ME309: Introduction to Fluid Mechanics: Fa99, Sp00 (Lead), Fa00, Fa04 (2 sections)
ME509: Intermediate Fluid Mechanics: Fa01, Fa02, Fa06
ME595W: Fundamentals of Particle Image Velocimetry: Sp02, Sp05
ME/ChE517: Micro/Nanoscale Physical Processes: Sp01*, Sp02*, Sp03*, Sp04*, Sp06, Sp08*, Sp09
ME610: Theory of Boundary Layer Flows: Fa03
*co-taught with Gil Lee, CHE

School/College/University Service

Fluid Mechanics Area Chair (5/2008-Present)
ME Leadership Team (5/2008-Present)
Fluid Mechanics Seminar Series Organizer (1/2000-5/2006)
Faculty Advisor to Pi Tau Sigma, the Mechanical Engineering Honor Society (4/2000-Present)
College of Engineering Academic Grievance Committee (8/2000-5/2004)
ME Head's Advisory Council (8/2003-5/2006)
ME Research Committee (8/2001-8/2003)
Heat Transfer Faculty Search Committee (8/2001-5/2002)
Computational Thermal Sciences Faculty Search Committee (12/2000-7/2001)
Laboratory Committee (3/2001-8/2001)
Graduate Committee (8/1999-8/2001)