Trials@uspto.gov
571-272-7822

Paper 43
Entered: February 7, 2024

UNITED STATES PATENT AND TRADEMARK OFFICE

BEFORE THE PATENT TRIAL AND APPEAL BOARD

SPECTRUM SOLUTIONS, L.L.C.,
Petitioner,

v.

DNA GENOTEK INC.,
Patent Owner.

IPR2022-01347
Patent 11,002,646 B2

Before DONNA M. PRAISS, CHRISTOPHER M. KAISER, and JAMIE T. WISZ, *Administrative Patent Judges*.

PRAISS, *Administrative Patent Judge*.

JUDGMENT
Final Written Decision
Determining All Challenged Claims Unpatentable
Granting Motion to Exclude
35 U.S.C. § 318(a)

Spectrum Ex. 1044
Spectrum v. DNA Genotek
IPR2023-01424

I. INTRODUCTION

Spectrum Solutions, L.L.C. ("Petitioner") filed a Petition requesting *inter partes* review of claims 1, 3–8, 11, and 12 ("the challenged claims") of U.S. Patent No. 11,002,646 B2 (Ex. 1001, "the '646 patent"). Paper 1 ("Pet."). DNA Genotek Inc. ("Patent Owner") filed a Preliminary Response. Paper 6. Pursuant to 35 U.S.C. 314, we instituted *inter partes* review of the challenged claims on all grounds set forth in the Petition. Paper 7 ("Institution Decision" or "Inst. Dec.").

After institution, Patent Owner filed a Patent Owner's Response (Paper 18, "PO Resp."), Petitioner filed a Reply (Paper 23, "Pet. Reply"), and Patent Owner filed a Sur-Reply (Paper 26, "PO Sur-Reply"). Patent Owner filed a motion to exclude Exhibit 1020 (Paper 30), which was opposed (Paper 31) and the subject of a reply (Paper 35). An oral hearing was held on November 14, 2023, and a transcript of the hearing is included in the record (Paper 38). Following the hearing, and pursuant to our order for further briefing on claim construction (Paper 37, "Order"), the parties filed supplemental briefs (Papers 39, 40) and corresponding responsive briefs (Papers 41, 42).

We have jurisdiction under 35 U.S.C. § 6. After considering the parties' arguments and supporting evidence, we conclude that Petitioner has proven by a preponderance of the evidence that claims 1, 3–8, 11, and 12 of the '646 patent are unpatentable. 35 U.S.C. § 316(e).

II. BACKGROUND

A. Related Matters

The parties indicate that the '646 patent is the subject of *DNA Genotek Inc. v. Spectrum Solutions LLC*, No. 21-cv-0516-DMS-LL (S.D. Cal.). Pet. 1; Paper 4, 2.

Patent Owner further identifies litigation between Petitioner and a third party, Longhorn Vaccines & Diagnostic Inc., in the district court of Utah and several *inter partes* review proceedings filed by Petitioner as "related litigation." Paper 4, 2–3. These matters do not appear to include assertions that the '646 patent is infringed or unpatentable. Patent Owner additionally identifies U.S. patent applications which claim the benefit of the '646 patent's filing date. *Id.* at 3. We are additionally aware of IPR2023-01424 involving the same parties to the instant proceeding and U.S. Patent 11,536,632, which claims priority to the same provisional applications as does the '646 patent.

B. The '646 Patent

The '646 patent is titled "Devices, Solutions and Methods for Sample Collection." Ex. 1001, code (54). The '646 patent describes the field of disclosure as relating to "devices, solutions and methods for collecting samples of bodily fluids or other substances." *Id.* at 1:21–22. The '646 patent describes saliva and urine as examples of bodily fluids that "may enable large-scale 'population-sized' epigenetic research." *Id.* at 2:51–53. Specifically, the '646 patent states that "home-base[d] sample collection . . . may allow for a much wider range of research options available as it can greatly increase participant numbers and samples can be more easily shipped by the subjects from anywhere." *Id.* at 2:53–57.

The ’646 patent describes as beneficial the ability to “securely house a toxic preservative solution in a closed chamber” of the device to preserve specimens from a widely geographically dispersed population without exposing the donor or laboratory technician to the toxic solution. *Id.* at 3:60–4:8. However, the ’646 patent states that existing sample collection devices utilize “sharp extruding objects and thin pierceable membranes” that “represent a safety hazard to the sample donor as any wrong manipulation (such as with a finger nail) can lead to piercing of the membrane and release of the solution.” *Id.* at 4:16–31. In addition, the ’646 patent describes existing treatments for treating cells to maintain their antigen profiles and epigenomic profiling containing lysine, glycine, and formaldehyde for stabilizing cells from blood, which will not protect cells from proteases found in bodily fluids such as saliva. *Id.* at 4:37–49.

The ’646 patent describes the invention as providing a safe and easy to use sample collection device for naturally expressed bodily fluids that uses a minimum number of parts, does not include sharp objects, and does not require removal or exchange of a piece or object thereof apart from depositing the sample and closing the sample collection device. *Id.* at 4:53–5:7.[1] The ’646 patent describes an embodiment as having a tube with a

[1] Patent Owner asserts that “safe” in the context of the ’646 patent is with regard to accidental exposure to the toxic preservative solution, however, the ’646 patent explicitly states that safety refers to two aspects for the sample donor and the end user: “sharp objects are not included *and* there is limited to no risk of exposure to toxic solutions (e.g., sample preservation solutions).” *Compare* Ex. 1001, 5:4–9 (emphasis added), *with* PO Resp. 4–5 (“This is the safety issue described in the ’646 patent: in devices that utilize a thin-film membrane to house a toxic preservative . . . a thin film membrane presents a risk of inadvertent rupturing of the reservoir.”).

reservoir for collecting sample fluid, a cap being securely coupled to the tube, and an annular blocking member that moves from a position where the annular blocking member is covering an aperture to a position in which the annular blocking member is not covering the aperture, thus allowing sample preserving fluid or material to release from an interior space to interact with the sample. *Id.* at 14:37–53. The '646 patent describes the cap and tube as being threadably engaged and also the annular blocking member being threadably engaged along the side of the inner walls. *Id.* at 14:54–15:5. Figure 3B below depicts an embodiment.

FIG. 3B

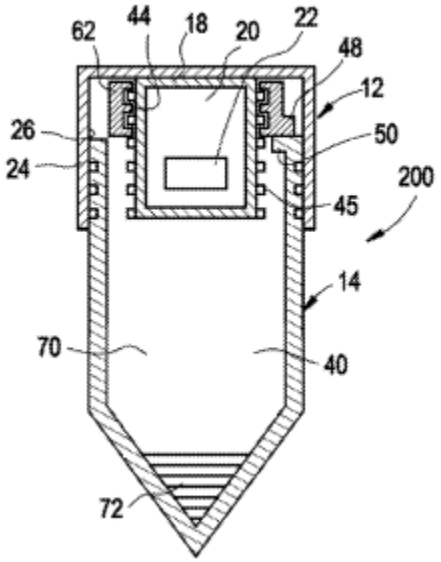

Figure 3B above shows a sample collection device in which cap 12 is coupled to tube 14 and movable annular member 62 is moved to a position where it does not cover aperture 22 in the inner wall, thereby allowing the sample preserving fluid to be released from interior space 20 and to interact with sample 72. *Id.* at 8:54–58, 14:37–48. The Specification further discloses that "interior space 20 may be at least partially defined by at least one of an inner wall 18 or outer wall 24 of the cap 12." *Id.* at 14:12–14.

C. Illustrative Claim

Petitioner challenges claims 1, 3–8, 11, and 12. Pet. 23. Claim 1 is the sole independent claim. Ex. 1001, 22:16–47. Claims 3–8, 11, and 12 depend from claim 1. *Id.* at 22:53–23:8, 23:17–24:6.

Claim 1 is reproduced below.

> 1. A kit for collecting and preserving a biological sample, the kit comprising:
>
> a sample collection vessel, the sample collection vessel comprising:
>
> a sample collection reservoir having an opening configured to receive the biological sample from a user into the sample collection reservoir;
>
> a connection member disposed on an exterior portion of the sample collection vessel and adjacent to the opening;
>
> a cap, the cap comprising:
>
> a reagent chamber configured to store a reagent; and
>
> a complementary connection member configured to engage the connection member of the sample collection vessel; and
>
> a movable annular valve configured to associate with the cap and with the opening of the sample collection reservoir, the movable annular valve comprising:
>
> an inner cylinder in fluid-tight association with the cap and comprising a sidewall, the sidewall comprising a fluid vent; and
>
> an outer cylinder in fluid-tight association with the inner cylinder and associated with the opening of the sample collection reservoir, the outer cylinder comprising an aperture defined by an interior sidewall of the outer cylinder,

wherein the aperture accommodates at least a portion of the inner cylinder,

wherein the interior sidewall obstructs the fluid vent when the movable annular valve is closed, and

wherein the interior sidewall does not obstruct the fluid vent when the movable annular valve is open.

Id. at 22:16–47.

D. *Asserted Grounds of Unpatentability*

Petitioner, supported by the declarations of Karl R. Leinsing, MSME, PE (Exs. 1002, 1019) and Vincent A. Fischetti, Ph.D. (Ex. 1011), asserts the following four grounds of unpatentability (Pet. 23):[2]

Claim(s) Challenged	35 U.S.C. §	Reference(s)/Basis
1, 3–8, 11, 12	103(a)	Plante,[3] Cho[4]
1, 3–8, 11, 12	103(a)	Plante, Cho, Maples[5]
1, 3–8, 11, 12	103(a)	Plante, Patterson[6]
1, 3–8, 11, 12	103(a)	Plante, Patterson, Maples

III. ANALYSIS

A. *Legal Standard*

A patent claim is unpatentable under 35 U.S.C. § 103(a) if the differences between the claimed subject matter and "the prior art are such

[2] The relevant sections of the Leahy-Smith America Invents Act ("AIA"), Pub. L. No. 112–29, took effect on March 16, 2013. The '646 patent claims priority to applications with filing dates before this date. *See* Ex. 1002, codes (60), (63). For the purposes of this Decision, pre-AIA statutes apply.

[3] US 2012/0325721 A1, published Dec. 27, 2012 (Ex. 1003).

[4] WO 2005/051775 A2, published June 9, 2005 (Ex. 1004).

[5] WO 2004/017895 A2, published Mar. 4, 2004 (Ex. 1009).

[6] US 7,464,811 B2, issued Dec. 16, 2008 (Ex. 1005).

that the subject matter, as a whole, would have been obvious at the time the invention was made to a person having ordinary skill in the art to which said subject matter pertains." *KSR Int'l Co. v. Teleflex Inc.*, 550 U.S. 398, 406 (2007). The question of obviousness is resolved on the basis of underlying factual determinations including: (1) the scope and content of the prior art; (2) any differences between the claimed subject matter and the prior art; (3) the level of ordinary skill in the art; and (4) when in evidence, objective evidence of nonobviousness. *Graham v. John Deere Co.*, 383 U.S. 1, 17–18 (1966).[7]

B. Level of Ordinary Skill in the Art

In order to determine whether an invention would have been obvious at the time the application was filed, we consider the level of ordinary skill in the pertinent art at the critical time. *Graham*, 383 U.S. at 17. The resolution of this question is important because it allows us to "maintain[] objectivity in the obviousness inquiry." *Ryko Mfg. Co. v. Nu–Star, Inc.*, 950 F.2d 714, 718 (Fed. Cir. 1991). In assessing the level of ordinary skill in the art, various factors may be considered, including the "type of problems encountered in the art; prior art solutions to those problems; rapidity with which innovations are made; sophistication of the technology; and educational level of active workers in the field." *In re GPAC, Inc.*, 57 F.3d 1573, 1579 (Fed. Cir. 1995) (quotation omitted). Generally, it is easier to establish obviousness under a higher level of ordinary skill in the art. *Innovention Toys, LLC v. MGA Entm't, Inc.*, 637 F.3d 1314, 1323 (Fed. Cir. 2011) ("A less sophisticated level of skill generally favors a

[7] The parties have not provided evidence of objective indicia of nonobviousness in this proceeding.

determination of nonobviousness . . . while a higher level of skill favors the reverse.”).

Petitioner asserts that a person having ordinary skill in the art (POSITA or POSA) “would have had at least a Bachelor’s degree in mechanical engineering, biomedical engineering, or similar technical degree and at least 3 years of experience in the medical device industry, including experience with containers and valves used in disposable medical devices.” Pet. 16 (citing Ex. 1002 ¶ 49). Petitioner further asserts that such a person would have collaborated with a team member with training and experience in the chemical/biological aspects of the invention, having a Ph.D. in microbiology, molecular biology, biochemistry, or related discipline and “at least two years of post-graduate experience in the area of biological sample preservation and nucleic acid extraction, preservation, and analysis.” *Id.* at 16–17 (citing Ex. 1011 ¶¶ 24–26). Patent Owner does not dispute using Petitioner’s proposed definition. PO Resp. 6.[8]

We apply Petitioner’s proposed definition because it is consistent with the problems addressed in the ’646 patent and the prior art of record. *See Okajima v. Bourdeau*, 261 F.3d 1350, 1355 (Fed. Cir. 2001) (explaining that specific findings on ordinary skill level are not required “where the prior art itself reflects an appropriate level and a need for testimony is not shown” (quoting *Litton Indus. Prods., Inc. v. Solid State Sys. Corp.*, 755 F.2d 158, 162 (Fed. Cir. 1985))).

---

[8] Patent Owner references its Preliminary Response, however, arguments not made in Patent Owner’s Response are waived. 37 C.F.R. § 42.120 (a); *In re NuVasive*, 842 F.3d 1376, 1380–81 (Fed. Cir. 2016) (arguments made in a preliminary response that were omitted in a patent owner response are deemed waived).

C. Claim Construction

In an *inter partes* review proceeding based on a petition filed on or after November 13, 2018, a patent claim shall be construed using the same claim construction standard that would be used to construe the claim in a civil action under 35 U.S.C. § 282(b). 37 C.F.R. § 42.100(b) (as amended Oct. 11, 2018). This rule adopts the same claim construction standard used by Article III federal courts, which follow *Phillips v. AWH Corp.*, 415 F.3d 1303 (Fed. Cir. 2005) (en banc), and its progeny. Under this standard, the words of a claim are generally given their "ordinary and customary meaning," which is the meaning the term would have to a person of ordinary skill at the time of the invention, in the context of the entire patent including the specification. *See Phillips*, 415 F.3d at 1312–13.

1. "Biological Sample"/"Preserving a Biological Sample"

Petitioner asserts that claim 1's preamble "collecting and preserving a biological sample" is limiting because the only sample described in the Specification as being preserved are cells and the preamble provides antecedent basis for the term "biological sample" in the body of the claim. Pet. 18; Paper 39, 1. Petitioner proposes the following constructions. Pet. 17–18; Paper 39, 2 (citing Ex. 1001, 16:23–27).

Claim Term	Petitioner's Proposed Construction
Biological sample	Cells
Preserving a biological sample	Preventing cells from having their antigens degraded such that they can be purified or enriched based on their antigens, and preventing alterations in the cellular epigenome

Petitioner directs us to the '646 patent's definition of "preserving cells," which is essentially quoted in Petitioner's proposed construction, and

asserts the plain meaning in the context of the '646 patent is "to generally maintain the cells of the sample in their *in vivo* state." Pet. 18 (citing Ex. 1001, 16:23–27); Paper 39, 3. According to Petitioner, "if one were to stabilize and preserve the integrity of a cell, one would be maintaining the antigens and epigenome of the cell." *Id.* Petitioner supports its position with Dr. Fischetti's testimony that "[a] POSA would have known of preserving fluids to use for whatever his/her desired objective might be" and asserts that the '646 patent as well as the prior art references Plante and Maples are consistent with the known use of compositions to preserve the integrity of cells. *Id.* at 3–4 (citing Ex. 1011 ¶ 36; Ex. 1003 ¶ 18; Ex. 1009, 1:5–9, 19:16; Ex. 1001, 16:48–54).

Patent Owner states that the District Court construed these terms,[9] but asserts that no construction is necessary to determine patentability.

---

[9] The District Court construed "biological sample" to mean "biological sample containing cells." Ex. 2031, 57. The District Court based its claim construction on the Specification's description of samples containing cells rather than equating "samples" and "cells" and therefore may contain "other biological material." *Id.* at 58–59 (citing Ex. 1001, code (57), 1:21–27, 6:46–53, 6:61–62). The District Court construed "preserving a biological sample" to mean "preventing cells in the biological sample from having their antigens degraded such that they can be purified or enriched based on their antigens, and preventing alterations in the cellular epigenome." Ex. 2031, 59. The District Court based its claim construction on the Specification's description of preservation being limited to only preservation of cells. *Id.* at 64. The District Court also based its construction on the "express definition in the specification." *Id.* at 64–65 (quoting Ex. 1001, 16:23–27). Although a district court's interpretation of a claim term recited in the involved patent is instructive, we nevertheless are not bound by that construction. *See Power Integrations, Inc. v. Lee*, 797 F.3d 1318, 1326 (Fed. Cir. 2015) ("There is no dispute that the board is not generally bound by a prior judicial construction of a claim term.").

PO Resp. 5–6 (citing Ex. 2031, 57, 59).[10] In further briefing authorized by the Board, Patent Owner asserts that to stabilize and preserve the integrity of a cell means one would be maintaining both the antigens and the epigenome of the cell, which requires an independent showing that alterations in the cellular epigenome are prevented, which, in turn, means "preventing both methylation at the 5 position of cytosine in a CpG dinucleotide and acetylation of lysine residues of histones." Paper 42, 1–2. Regarding whether the prior art of record establishes that compositions were known to preserve the integrity of cells, Patent Owner asserts that Maples teaches that the *in vivo* state is often represented in the antigen expression of cells, but is silent regarding the preservation of the cellular epigenome. *Id.* at 3–4 (citing Ex. 1009, 1:25–26, 2:10–13).

Patent Owner argues that the body of the claims puts forth every physical limitation of the apparatus and thereby recites a structurally complete invention. Paper 40, 1. Patent Owner further argues that because the preamble merely states "how and why the apparatus may be used," without reciting any additional structure or steps, it is not limiting. *Id.* "Whether to treat a preamble as a limitation is a determination 'resolved only on review of the entire[] . . . patent to gain an understanding of what the inventors actually invented and intended to encompass by the claim.'" *Catalina Marketing Int'l., Inc. v. Coolsavings.com, Inc.*, 289 F.3d 801, 808 (Fed. Cir. 2002) (quoting *Corning Glass Works v. Sumitomo Electric U.S.A.*,

[10] Patent Owner also refers back to its Preliminary Response. However, as explained in the preceding footnote, arguments made in the Preliminary Response that are omitted from Patent Owner's Response are deemed waived. 37 C.F.R. § 42.120 (a); *In re NuVasive*, 842 F.3d at 1380–81.

Inc., 868 F.2d 1251, 1257 (Fed. Cir. 1989)). "In general, a preamble limits the invention if it recites essential structure or steps, or if it is 'necessary to give life, meaning, and vitality' to the claim." *Id.* (quoting *Pitney Bowes, Inc. v. Hewlett-Packard Co.*, 182 F.3d 1298, 1305 (Fed. Cir. 1999)). "Conversely, a preamble is not limiting 'where a patentee defines a structurally complete invention in the claim body and uses the preamble only to state a purpose or intended use for the invention.'" *Id.* (quoting *Rowe v. Dror*, 112 F.3d 473, 478 (Fed. Cir. 1997)).

The court in *Catalina* noted that although no litmus test exists for determining whether to treat a preamble as a limitation, several "guideposts" have emerged from the case law in this area. *Id.* In particular, guideposts tending to show that the preamble is a claim limitation include: Jepson claiming, dependence on a particular disputed preamble phrase for antecedent basis, when the preamble is essential to understand limitations or terms in the claim body, and when the preamble recites additional structure or steps underscored as important by the specification. *Id.* On the other hand, the preamble might not constitute a claim limitation when the claim body describes such a structurally complete invention that deleting the preamble phrase does not affect the structure or steps of the claimed invention. *Id.* at 809. Also, "preambles describing the use of an invention generally do not limit claims because the patentability of apparatus or composition claims depends on the claimed structure, not on the use or purpose of the structure." *Id.*

Claim 1 recites a "kit for collecting and preserving a biological sample" and the body of the claim refers back to "the biological sample" in the context of "a sample collection reservoir having an opening configured

to receive the biological sample from a user into the sample collection reservoir." Ex. 1001, 22:20–22. Thus, the pertinent inquiry is whether the use of the preamble term in the body of the claim limits the scope of the claim. *See Shoes by Firebug LLC v. Stride Rite Children's Grp., LLC*, 962 F.3d 1362, 1368 (Fed. Cir. 2020) ("While antecedent basis alone is not determinative of whether a preamble is limiting, use of preamble terms to define positive limitations in the body of claims can evince an inventor's intent that the preamble limit the scope of the claim.").

We agree with Petitioner and the District Court's determination that the preamble is limiting. Our determination that the preamble is limiting is based on the body of the claim dictating that the opening of the sample collection reservoir is "configured" such that the recited "biological sample" can be received from a user. Consequently, the body of the claim relates the structure of a kit component to the recited "biological sample." Therefore, the body of the claim is not structurally complete independent from the preamble.

Also consistent with the District Court's finding that the '646 patent Specification does not equate biological samples with cells, we similarly find that the biological sample described by the Specification is a bodily fluid that contains cells. Ex. 1001, code (57) ("isolation and preservation of cells from saliva and other bodily fluids," "collection of bodily fluids," "preserve cells in the bodily fluid"), 1:21–27 ("collecting samples of bodily fluids," "naturally expressed bodily fluid," "the isolation and preservation of cells from such bodily fluids"), 6:46–53 ("isolation of cells from bodily fluids," "isolating rare cells . . . from bodily fluid"), 6:61–62 ("preserving cells in bodily fluids")). The Specification further defines "bodily fluids" to

"generally refer[] to the collection of naturally expressed bodily fluids" and may include blood as well. *Id.* at 6:54–60. The Specification consistently describes the biological sample as a bodily fluid that includes cells. Accordingly, we construe "biological sample" to mean "bodily fluid that contains cells."

Regarding "preserving a biological sample," we note that the words of the claim must be given their plain meaning unless the plain meaning is inconsistent with the Specification. *In re Zletz*, 893 F.2d 319, 321 (Fed. Cir. 1989). Additionally, ordinary, simple English words whose meaning is clear and unquestionable are to be construed to mean exactly what they say—absent, of course, any indication that their use in a particular context changes their meaning. *Chef America, Inc. v. Lamb-Weston, Inc.*, 358 F.3d 1371, 1372 (Fed. Cir. 2004).

The abstract of the '646 patent describes isolating and preserving cells from bodily fluids "for cellular analysis" and "genomic studies." Ex. 1001, code (57). In the field of the disclosure portion of the '646 patent, cells isolated from bodily fluids are preserved "for studies in any of: functional genomic and epigenetic studies, and biomarker discovery." *Id.* at 1:25–29. In the background section, the '646 patent describes the interest in "large-scale epigenetic research" for the purpose of "understanding the mechanisms of gene-environment interactions" suggesting that "epigenetic mechanisms may provide a molecular memory of environmental experiences." *Id.* at 1:60–67. The background section further describes the challenges of collecting bodily fluids, such as saliva, is that it is a digestive fluid that can be rich in proteases and that existing solutions used to stabilize cells from blood, which is a transporter fluid, "will not protect cells from proteases

found in some bodily fluids, such as saliva." *Id.* at 3:24–36, 4:43–47. The detailed description section of the '646 patent discloses "a solution for preserving cells in one or more bodily fluids, such as saliva and urine" that "may be beneficial for further separation into cell types and downstream molecular analysis" and "allows for storage of cells in the bodily fluid to retain their antigenicity and cellular architecture." *Id.* at 16:9–15. The Specification describes some embodiments of solutions for preserving cells in one or more bodily fluids where the solutions contain a chemical fixing agent, a protease inhibitor, an antimicrobial agent, serum proteins, and are buffered to preferred pH ranges. *Id.* at 16:15–22.

Thus, the plain meaning of "preserving a biological sample," consistent with the '646 patent disclosure focused on maintaining the architecture of cells contained in a bodily fluid that may include digestive proteases for further study downstream, is "preserving the integrity of a cell contained in a bodily fluid sample."

The portion of the '646 patent disclosure that the District Court points to as an express definition of the term "preserving a biological sample" is quoted below:

> For purposes of the disclosure, "preserving cells" means preventing the cells from having their antigens degraded, such that they can be purified or enriched based on their antigens, and preventing alterations in the cellular epigenome.

Ex. 1001, 16:23–27. The disclosure continues to define "epigenome" as "the state or pattern of alteration of genomic DNA" which the background portion of the '646 patent describes as a research area of study. *Id.* at 16:27–29. The definition of "epigenome" is followed by examples of how genomic DNA is modified to form an "epigenome." *Id.* at 16:29–33.

While we consult the Specification to determine the meaning of the claim terms, we take care to not limit the claim to the specific embodiments disclosed in the Specification when the terms appear to have a broader meaning. *See In re Van Geuns*, 988 F.2d 1181, 1184 (Fed. Cir. 1993). Generally, claim terms are:

> given their ordinary and customary meaning as understood by a person of ordinary skill in the art when read in the context of the specification and prosecution history. There are only two exceptions to this general rule: 1) when a patentee sets out a definition and acts as his own lexicographer, or 2) when the patentee disavows the full scope of a claim term either in the specification or during prosecution.

Thorner v. Sony Comput. Entm't Am. LLC, 669 F.3d 1362, 1365 (Fed. Cir. 2012) (citation omitted). "To act as its own lexicographer, a patentee must 'clearly set forth a definition of the disputed claim term' other than its plain and ordinary meaning." *Id.* (quoting *CCS Fitness, Inc. v. Brunswick Corp.*, 288 F.3d 1359, 1366 (Fed. Cir. 2002)). "Absent a clear disavowal or contrary definition in the specification or the prosecution history, the patentee is entitled to the full scope of its claim language." *Home Diagnostics, Inc. v. LifeScan, Inc.*, 381 F.3d 1352, 1358 (Fed. Cir. 2004).

Because the term "biological sample" is not limited to cells or any particular bodily fluid, and because the downstream research or study of cells contained in the "biological sample" is not limited to epigenetic studies, we conclude that the statements in the Specification regarding the "epigenome" being defined as "the state or pattern of alteration of genomic DNA by covalent modification of the DNA or of proteins bound to the DNA" and the specific examples of "methylation at the 5 position of cytosine in a CpG dinucleotide, acetylation of lysine residues of histones" do

not support a departure from the claim language and the written description in the '646 patent for "preserving a biological sample." Thus, we construe the term "preserving a biological sample" to mean "preserving the integrity of a cell contained in a bodily fluid sample."

2. "Annular Valve" and "Associate[d]"

Petitioner asserts that the term "annular valve" as recited in the claims means "ring shaped valve" and that the term "associate[d]" as recited in the claims means "contact[ing]." Pet. 19–20. Nevertheless, Petitioner concludes that patentability of the claims does not rest on a construction for these terms. *Id.* at 19, 22.

We agree that it is not necessary for us to construe these claim terms because neither party asserts that they are material to the asserted grounds in the Petition. *See Nidec Motor Corp. v. Zhongshan Broad Ocean Motor Co.*, 868 F.3d 1013, 1017 (Fed. Cir. 2017) ("[W]e need only construe terms 'that are in controversy, and only to the extent necessary to resolve the controversy.'" (quoting *Vivid Techs., Inc. v. Am. Sci. & Eng'g, Inc.*, 200 F.3d 795, 803 (Fed. Cir. 1999))).

3. "Cap"

We requested that the parties provide an express claim construction for the term "cap" and address whether the term means a "cover for the sample collection vessel that does not share a surface with the valve." Order 3.

Petitioner asserts that the plain meaning of "cap" in the context of the '646 patent is "'a lid or cover' for the sample collection vessel." Paper 39, 5. Petitioner directs us to the '646 patent's disclosure that the sample collection vessel includes "two mating bodies, a cap and a tube" and that the cap

"mates with the tube" or "is coupled to the tube." *Id.* (quoting Ex. 1001, code (57), 5:10–14, 8:54–55, 10:2–8). Petitioner asserts that the context of the claim also supports the plain meaning of cap because the cap comprises both "a reagent chamber" and "a complementary connection member [e.g., threads] configured to engage the connection member of the sample collection vessel" thus covering or closing the vessel. *Id*. (alteration in original). Petitioner asserts that the term should not be construed to include the negative limitation "does not share a surface with the valve" because such a negative limitation is not consistent with the '646 patent's disclosure that the entirety of the cap includes the chamber/valve components such that the reagent chamber "may be at least partially defined by at least one of an inner wall 18 or outerwall 24 of the cap 12." *Id.* at 5–6 (quoting Ex. 1001, 14:12–14).

Patent Owner submits that the term "cap" means "a cover for the sample collection vessel that is not co-extensive with the movable annular valve." Paper 40, 5. Patent Owner contends that "the valve and cap are not co-extensive" because the claim recites a "moveable annular valve" that is "configured to associate with the cap." *Id.* According to Patent Owner, the valve cannot "associate" with the cap if the valve can also be the cap. *Id.* at 5–6.

Regarding the Specification's description of embodiments including the embodiment described in Figure 3A, Patent Owner asserts "whether or not the cap may form part of a cavity that holds reagents, the cap is not the valve." *Id.* at 6 (citing Ex. 1001, 8:49–53, 11:34–41). Patent Owner asserts that the Specification's description of "annular member 62 may be configured to interact with one or more features, such as . . . the cap"

supports the interpretation that the cap and the annular valve are not co-extensive. *Id.* at 6–7 (citing Ex. 1001, 14:37–47). As further support, Patent Owner directs us to the Examiner's statement in the prosecution history that the "valve is opened when the cap is unscrewed which allows the valve to open and the contents of the cap move to the sample collection vessel." *Id.* at 7 (quoting Ex. 1012, 5). Patent Owner further asserts Petitioner's experts "talked about caps as a separate component from the valve" and Petitioner labelled the cap and valve as distinct structures in the district court. *Id.* (citing Ex. 1011, 9; Ex. 1013, 10; Ex. 2011, 28:8–12, 93:6–13, 99:17–21).

We conclude that the term "cap" means "a cover for the sample collection vessel" without any negative limitation on the manner and extent to which the reagent-containing portion of the sample collection device is defined by the cap. Both Petitioner and Patent Owner direct us to the '646 patent's description of the embodiment shown in Figure 3A, shown below, to support their proposed claim constructions.

FIG. 3A

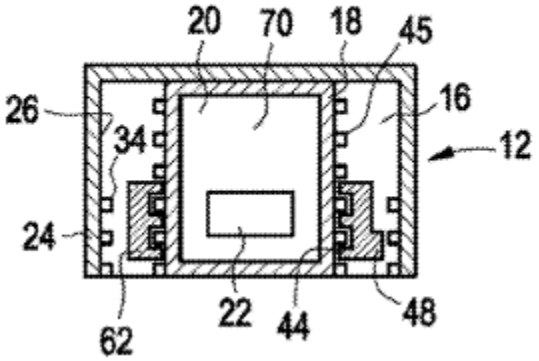

Figure 3A above is a cross-sectional view of the cap prior to being coupled to the tube (which coupling is depicted in Figure 3B reproduced in Section II.B describing the '646 patent). Ex. 1001, 8:49–50, 8:54–55, 14:9–10. The '646 patent describes Figure 3A as an embodiment of the sample

collection device in which cap 12 contains inner space 20 (containing sample preservation fluid or material 70) with moveable annular blocking member 62 that can cover an aperture 22 in inner wall 18. Ex. 1001, 8:49–53, 14:9–29. Patent Owner asserts that "whether or not the cap may form part of a cavity that holds reagents, the cap is not the valve" based on the description of Figure 3A's annular blocking member 62 being "configured to interact with one or more features . . . of the tube." Paper 40, 6 (citing Ex. 1001, 11:34–41, 14:37–47). However, the '646 patent's written description of the cap is expansive rather than limiting in terms of the overlap between structures in the cap section of the cap and tube collection device. Specifically, the '646 patent states "[t]he interior space 20 may be at least partially defined by at least one of an inner wall 18 or outer wall 24 of the cap 12." Ex. 1001, 14:12–14. The disclosure "at least partially" means that the cap may fully define the interior space for holding the reagent and not merely "part of a cavity that hold reagents" as Patent Owner asserts. *Compare* Ex. 1001, 14:12–14, *with* Paper 40, 6. In the absence of support for the negative limitation that Patent Owner asserts and in view of the "strong presumption against a claim construction that excludes a disclosed embodiment," we determine that the intrinsic evidence supports the construction of the term "cap" to mean "a cover for the sample collection vessel." *In re Katz Interactive Call Processing Patent Litig.*, 639 F.3d 1303, 1324 (Fed. Cir. 2011).

D. Overview of the Asserted Art

1. Plante (Exhibit 1003)

Plante is titled "Saliva Sample Collection Systems." Ex. 1003, code (54). Plante describes a receiving vessel having integrated threads and a complementary cap element including cooperating threads along with a reservoir with pierceable thin-film membrane. *Id.* at code (57). Plante discloses that the reservoir contains a special formula to stabilize and preserve a biological sample, such as saliva. *Id.* ¶ 35. Plante describes a carefully positioned knife integrated with the receiving vessel which pierces the membrane when the cap is screwed onto the receiving vessel and advances in an axial direction towards the receiving vessel. *Id.* Plante describes the preserving fluid as passing into the receiving vessel after the film is pierced to mix with the collected saliva, and a liquid-tight seal forming between an annular flange of the sealing cap and an inside surface of the receiving vessel. *Id.* ¶ 38. Plante's Figure 1 is shown below.

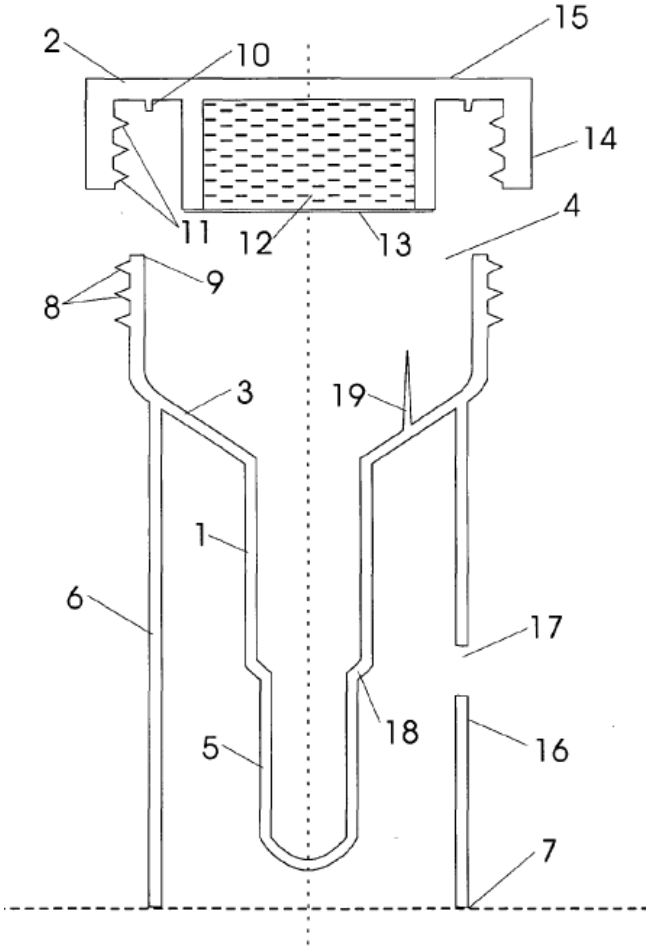

Plante's Figure 1 above depicts receiving vessel 1 having entrance aperture 4, cylindrically tubular portion 5, carefully positioned knife 19 integrated within the receiving vessel, and thread set system 8 formed as a part of a coupling means between the receiving vessel and cap portion 2. *Id.* ¶ 35. Plante's Figure 1 above also shows cooperating thread set 11 formed on an inside cylindrical surface of cap 2 and liquid tight reservoir 12 having a surface which may be pierced or otherwise compromised, such as a thin-film membrane or foil 13. *Id.*

2. Cho (Exhibit 1004)[11]

Cho is titled "Bottle" and describes "a bottle, which contains two kinds of materials separately in two spaces in a bottle body and communicates the separated spaces with each other as necessary so that the two materials can be mixed together." Ex. 1004, codes (54), (57). Cho states that "[i]t is . . . often necessary to mix two kinds of different materials together in a variety of industrial fields." *Id.* at 3:9–10. Cho gives as an example a coffee-based beverage being mixed with sugar or cream powder and states "medicines and chemicals are similar cases." *Id.* at 3:10–12.

Cho's embodiment shown in Figure 44 is reproduced below.

FIG. 44

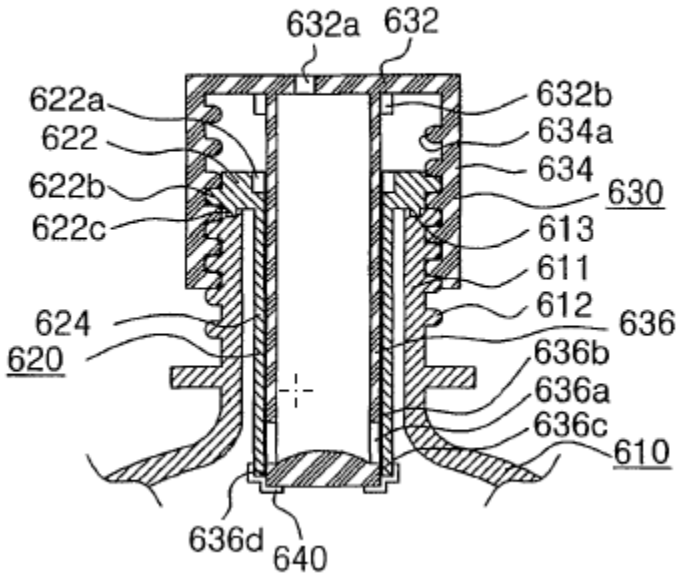

Figure 44 above depicts bottle body 610 having external threads 612 formed around the circumferential surface of mouth 611, which threads interact with internal threads 634a on upper cap 634. *Id.* at 48:15–18, 49:6–10. Cho

[11] Citations herein are to Cho's original pagination.

describes additive storage container 620 as comprising a circular end plate 622 and an inner cap 624 that extends downward in an axial direction and is axially inserted into mouth 611. *Id.* at 48:27–31. Cho describes slider 636 as extending in an axial direction from finish plate 632 at a position spaced apart from upper cap 634 and inserted into inner cap 624. *Id.* at 49:10–13. Cho describes ring-type seal protrusions 636b and 636c as formed around the outer circumferential surface of slider 636 at positions above and below discharge ports 636a to prevent additive from leaking through discharge ports 636a. *Id.* at 49:16–21. Cho describes bursting film 640 as preferably made of aluminum film to close the lower ends of both inner cap 624 and slider 636. *Id.* at 49:24–27. Cho describes the bottle cap in operation as being rotated so that the lower end of slider 636 tears off bursting film 640 so that additive discharges from additive storage container 620 though discharge ports 636a into the bottle body. *Id.* at 50:4–12.

3. Patterson (Ex. 1005)

Patterson is titled "Mixing Cap and Method for Use Thereof." Ex. 1005, code (54). Patterson describes a "pre-loaded" mixing cap as discharging selected dry or liquid ingredient from an outer housing through apertures of an inner tube, permitting the ingredients to flow through the apertures of the inner tube and into the liquid contents of a bottle. *Id.* at code (57). Patterson discloses that the mixing cap is for use with "powdered sports drinks, supplements and the like" as well as "any selected ingredient, additive or the like" including "medicines, chemicals, oils, or the like." *Id.* at 8:9–19. Patterson's Figure 3 is shown below.

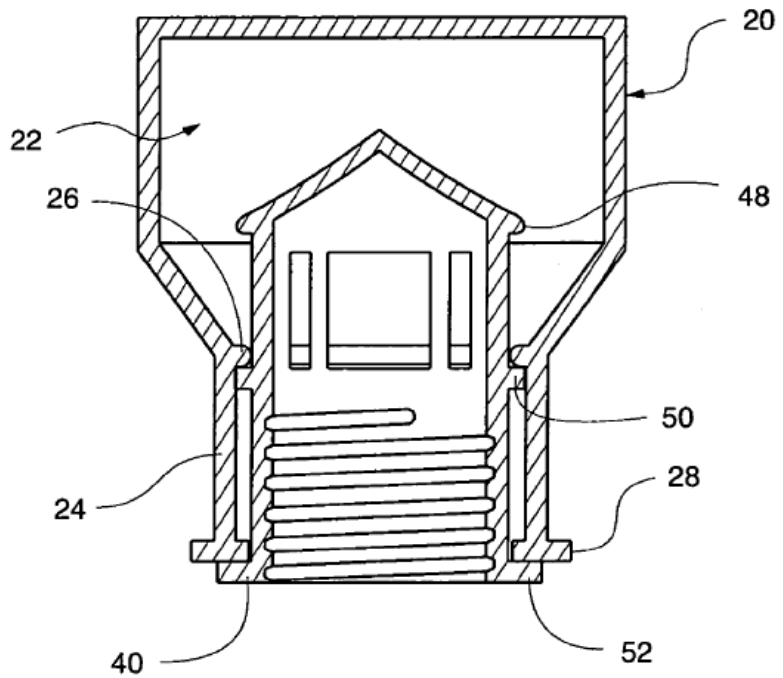

Patterson's Figure 3 above shows an "open position" of a mixing cap after outer housing 20 is pushed to downwardly slide neck portion 24 over a sidewall of inner tube 40 to introduce the dry/liquid ingredients of storage receptacle 22 through apertures in inner tube 40 and into the liquid contents of a bottle. *Id.* at 6:46–7:5.

4. Maples (Ex. 1009)

Maples is titled "Formaldehyde-Ammonium Salt Complexes for the Stabilization of Blood Cells." Ex. 1009, code (54). Maples describes "a method and composition for stabilizing biological cells and tissues" to "prevent[] or reduce[] cellular activation and response to environmental change without changing the antigenic makeup of the cells." *Id.* at 5:5–8.

E. Motion to Exclude

Patent Owner moves to exclude Exhibit 1020 ("CDC Workbook"). Paper 30. Petitioner opposes the motion (Paper 31), and Patent Owner replies in support of the motion (Paper 35).

The challenged exhibit is titled "Workbook for Designing, Implementing, and Evaluating a Sharps Injury Prevention Program" and is identified on the next page of the exhibit as "the CDC website on Sharps Safety." CDC Workbook 1–2. Patent Owner contends that Petitioner is asserting the CDC Workbook was publicly available in 2008 and that the asserted date of public accessibility is not supported by any evidence in the record, therefore, the exhibit lacks authentication. Paper 31, 2–4 (citing Paper 23, 2 (Exhibit List)). Patent Owner acknowledges that Mr. Leinsing's declaration states that he downloaded the CDC Workbook from the CDC's website, but does not indicate whether he was aware of the CDC Workbook before 2012[12] or that the CDC Workbook was publicly available in 2008. *Id.* at 4 (citing Ex. 1019 ¶¶ 2, 5).

Petitioner asserts that the CDC Workbook "is self-authenticating as '[a] book, pamphlet, or other publication purporting to be issued by a public authority.'" Paper 31, 1 (quoting Fed. R. Evid. 902(5)). Regarding the public availability of the CDC Workbook, Petitioner argues that the CDC Workbook is not being asserted as prior art under 35 U.S.C. § 102(b), but, rather, as evidence "a POSA would have prioritized removing the sharp as a way to reduce the risk of injury." *Id.* at 2 (quoting Pet. Reply 3, 4). Nevertheless, Petitioner asserts "[t]he URL indicates that the CDC Workbook was published in 2008." *Id.*

[12] Patent Owner asserts that the earliest application to which priority is claimed is provisional application No. 61/498,584, filed on June 19, 2011. Paper 35, 1 n.1. The Petition acknowledges, without challenging, that the earliest possible priority date of the '646 patent is before 2012. Pet. 5 ("At the time of the patent's earliest possible priority date (2011), ...").

We agree with Patent Owner that even if a URL for the CDC Workbook has embedded in it the numerals 2008, a URL alone is not sufficient evidence that the CDC Workbook was publicly available in 2008 as Petitioner purports. Paper 35, 1–2. Because (1) Petitioner seeks to use the CDC Workbook as evidence of what a POSITA would have understood and (2) the applicable legal standard in this proceeding evaluates what a POSITA would have understood to have been obvious "at the time the invention was made," we agree with Patent Owner that Petitioner failed to prove that the CDC Handbook is what Petitioner claimed it to be, i.e., accessible to a POSITA as of the earliest effective filing date of the '646 patent, which is an issue of authentication. *KSR*, 550 U.S. at 406 (Obviousness under 35 U.S.C. § 103(a) is assessed from the perspective of a POSITA "at the time the invention was made"); *see* Fed. R. Evid. 901(a) ("To satisfy the requirement of authenticating or identifying an item of evidence, the proponent must produce evidence sufficient to support a finding that the item is what the proponent claims it is.").

Accordingly, Patent Owner's Motion to Exclude the CDC Workbook is granted.

F. Unpatentability Grounds

1. Unpatentability over Plante and Cho

Petitioner asserts that claims 1, 3–8, 11, and 12 are unpatentable under 35 U.S.C. § 103(a) over the combination of Plante in view of Cho, citing the Declaration of Karl R. Leinsing for support. Pet. 24–57 (citing Ex. 1002 ¶¶ 30–31).

a. *Claim 1*

Petitioner contends Plante's system for the collection, storage, and shipping of biological matter, specifically saliva, discloses every element of claim 1 except for the recited "movable annular valve." *Id.* at 24, 29. Petitioner contends that it would have been obvious to a POSITA to use Cho's cap having a movable annular valve in Plante's sample collection system for the reasons: (1) Cho and Plante are in the same field of endeavor and address the same problem of providing an easy-to-use container for mixing two materials, (2) Cho's cap with an annular valve is a safer design than Plante's approach of using a knife in the vessel in view of a federal mandate to choose devices without sharps where possible and in view of the difficulty to mold sharp thin features in plastic, and (3) it would have been a simple substitution of one known element for another—Plante's cap for Cho's cap—to avoid the use of a knife in a vessel. *Id.* at 29–31 (citing Ex. 1002 ¶¶ 67–75). According to Petitioner, a POSITA would have expected Cho's cap to perform successfully the same function of releasing a reagent when connected to Plante's sample collection vessel because Cho's cap functions to release a reagent into a bottle when fastened to the bottle. *Id.* at 31 (citing Ex. 1002 ¶ 76).

At the outset, we focus on claim 1's preamble, "preserving a biological sample," which we determine is limiting and means "preserving the integrity of a cell contained in a bodily fluid sample." Petitioner asserts that Plante discloses preserving saliva and that a POSITA "would have known of preserving fluids to use for whatever his/her desired objective might be." Paper 39, 3 (citing Ex. 1003 ¶ 18; Ex. 1011 ¶ 26). Petitioner asserts that preserving fluids were known at the time the '646 patent was

filed to cause cells "to resist degradation" and were used for the "preservation and retention of the integrity of cells." *Id.* (citing Ex. 1001, 16:48–54; Ex. 1009, 1:5–9, 19:16).

Patent Owner asserts that "preserving the integrity of a cell" requires "maintaining the antigens and *epigenome* of the cell" which "means preventing both methylation at the 5 position of cytosine in a CpG dinucleotide and acetylation of lysine residues of histones." Paper 40, 1–2. Patent Owner asserts that Petitioner's grounds fail because this is not taught explicitly by Plante and Cho. *Id.* at 1.

Because our construction of "preserving a biological sample" does not require a separate showing regarding the epigenome of the cell, we do not agree with Patent Owner that Petitioner's challenge fails for this reason. Rather, we find the preponderance of the evidence in this record supports Petitioner's position that it would have been within the level of skill of a POSITA to select a preserving fluid for the purpose of preserving the cells in a sample for subsequent use. Ex. 1011 ¶¶ 26, 33–36 (describing known compositions for lysing the cells and denaturing any nucleases released in the process to preserve DNA for an analysis of interest and Plante's disclosure of using preserving fluid and preserving DNA in a biological sample); Ex. 1003 ¶¶ 18 (saliva sample kit "suitable for long-term and durable storage of a DNA in a saliva sample"), 41 (disclosing filling the reservoir with a preserving fluid that preserves a saliva sample). Based on this record, the preservation of a biological sample containing cells, i.e., saliva, would have been obvious in view of Plante. Plante generally teaches the use of a preserving fluid together with a biological sample. It would have

been obvious to a POSITA to select a preserving fluid suitable for a particular diagnostic or analysis to be performed on the sample.

Regarding the claimed device, Petitioner identifies in Plante's Figure 1 the recited sample collection vessel having a sample collection reservoir and a connection member disposed on an exterior portion of the sample collection vessel in the form of threads. Pet. 32–34 (citing Ex. 1003, Fig. 1). In parallel, Petitioner identifies Cho's threaded connection to screw a cap around an outer circumferential surface of Cho's container for mixing two materials. *Id.* at 34–35 (citing Ex. 1004, 2:7–10, 48:16–19, 49:6–10, Figs. 43–45B). Regarding the cap required by claim 1, Petitioner contends both Plante and Cho disclose caps that include a reagent chamber; Plante describes a cap having a reservoir to contain a "preserving fluid" while Cho discloses a cap having a reservoir for an additive material that includes "medicines and chemicals" which are prevented from "being changed or deteriorated." *Id.* at 35–37 (citing Ex. 1003 ¶¶ 35, 41, Fig. 1 (sealing cap 2); Ex. 1004, 1:8–12, 1:19–24, 55:13–17, 55:22–25, Fig. 44 (opening unit 630); Ex. 1002 ¶ 87). Petitioner identifies in each of Plante and Cho's caps the "complementary connection member[s]" required by claim 1. *Id.* at 38–39 (citing Ex. 1003 ¶ 35, Fig. 1 (thread sets 11); Ex. 1004, 49:5–10, Fig. 44 (thread set 634a)).

Regarding the "moveable annular valve" required by claim 1, Petitioner identifies an inner cylinder, outer cylinder, and fluid vent in Cho's Figure 44 by comparison with the '646 patent's Figure 3A structure. Pet. 40.

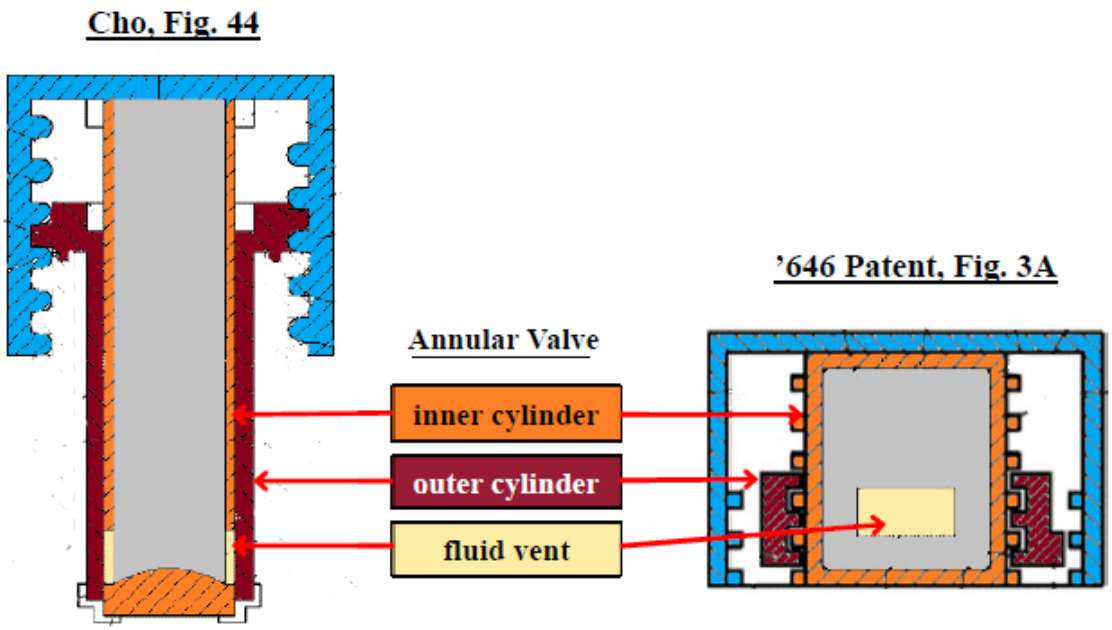

Petitioner's annotated comparison above depicts vents in the inner cylinder that are open or closed based on the relationship to the outer cylinder. Pet. 40–51. Petitioner states Cho's Figure 44 annotated above shows the valve in a closed position. *Id.* at 49. Petitioner annotates Cho's Figure 45A below to show Cho's valve in an open position. *Id.* at 50.

Fig.45A

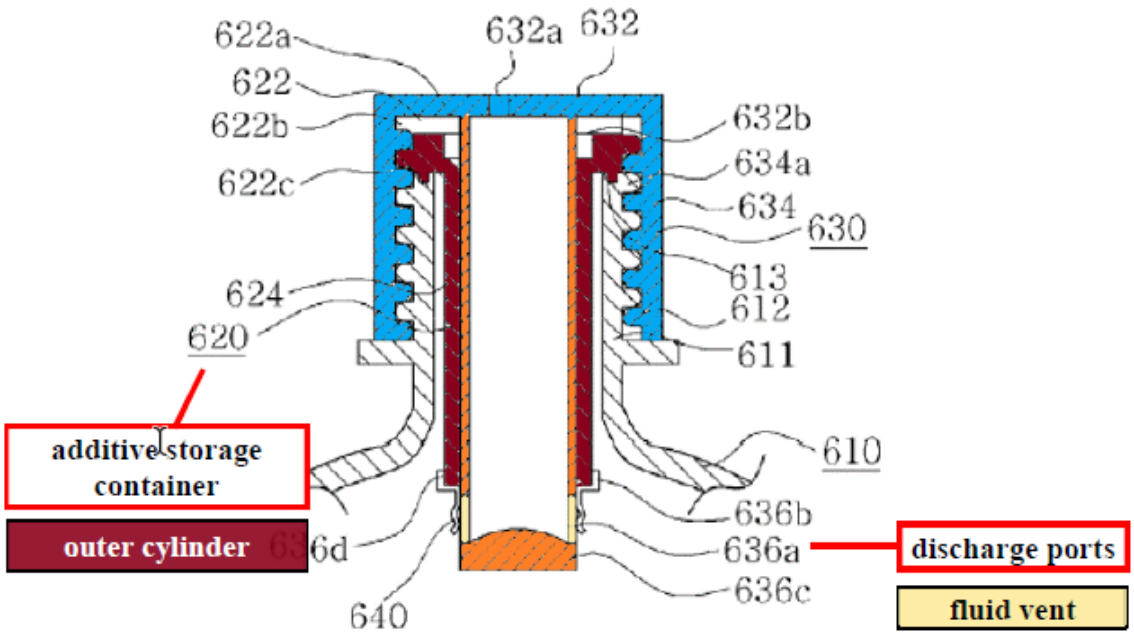

According to Petitioner, annotated Figure 45A above shows slider 636 moves downward through the outer cylinder so that additive is discharged from the additive storage container 620 when discharge port 636a of the inner cylinder (slider 636) is unobstructed by the outer cylinder. *Id.* at 50–51 (citing Ex. 1004, 49:34–50:12, Fig. 45A). Thus, Petitioner identifies each of claim 1's limitations in Plante's sample collection kit modified with Cho's moveable annular valve.

Patent Owner contends the Petition fails to show unpatentability because the Petition's reasons to combine Plante and Cho do not support the combination, specifically (1) a POSITA would not have been motivated to replace Plante's knife, (2) a POSITA would not have substituted Cho's cap for Plante's cap, and (3) the combination would not have been obvious because there is no net benefit when weighing the advantages and disadvantages of the combination. PO Resp. 6–82.

Regarding motivation to replace Plante's knife, Patent Owner argues that a POSITA would not recognize Plante's knife as "creating a risk of injury to a user." PO Resp. 10. Patent Owner asserts that a commercial saliva collection kit called "RE-100" (1) was available at the time of the '646 patent, (2) was "similar to" Plante's device, and (3) presented "no risk of injury to the user" when used "as instructed." *Id.* at 11–14 (citing Ex. 2013 ¶ 31). Patent Owner further contends that Plante's device is designed to avoid injury from the knife component by teaching that the knife is "carefully positioned." PO Resp. 15 (citing Ex. 2013 ¶ 35). Patent Owner contends that the location of Plante's knife close to the receiving vessel wall diverts a user's finger bearing directly down on the knife. *Id.* at 16–17. Patent Owner asserts that Plante's knife is positioned lower than the commercial RE-100 kit's "piercing member" that Patent Owner's expert, Mr. Wereley, pressed and concluded "I was not injured nor did I perceive a risk of injury." *Id.* at 18 (citing Ex. 2013 ¶ 36). Patent Owner's position is, thus, absent an actual risk of injury due to the overall design of Plante's sample collection kit as opposed to a risk of injury due to a component of Plante's sample collection kit, the combination of Plante with Cho lacks a sufficient rationale.

Patent Owner also asserts that the Needlestick Safety and Prevention Act (NSPA) did not create a federal mandate to choose devices without sharps, but, rather, was enacted to regulate occupational exposure to bloodborne pathogens in health care settings. *Id.* at 21–22. Patent Owner asserts that the NSPA is not relevant to at-home kits that are shipped to patients, because there is no healthcare worker obviating the concern for occupational exposure to bloodborne pathogens. *Id.* at 23. According to

Patent Owner, automated processing of samples and protocols ensure that lab technicians are not exposed to the sample. *Id.* at 24–25. Patent Owner asserts that the NSPA also reports that sharps with engineered injury protections are effective in reducing accidental sharps injuries, thus sharps are acceptable if the risk is controlled. *Id.* at 27–28. Patent Owner asserts that Mr. Leinsing's testimony regarding motivation to avoid sharps is undercut by his own patent applications for medical devices that include sharps. *Id.* at 30–33.

Patent Owner asserts that existing devices that contain a piercing member are evidence that such devices do not present manufacturing problems. *Id.* at 34. Patent Owner directs us to the "sharp thin features" in Cho's ratchet mechanism design that would be determine modification of Plante's device under Petitioner's logic. *Id.* at 34–37 (citing Ex. 1004, Figs. 2, 6, 9–11, 17, 26, 30, 34A, 36, 47). Patent Owner also directs us to Ancestry.com's patent application for a sample collection device having a piercing insert without any discussion of molding difficulties. *Id.* at 37–41. Patent Owner concludes that a POSITA would have concluded that molding a feature to pierce a thin membrane was a routine manufacturing process. *Id.* at 41.

Regarding replacing Cho's cap for Plante's cap, Patent Owner asserts that Cho is not analogous art. *Id.* at 44.[13] Patent Owner asserts that Cho is directed to a different field of endeavor than the '646 patent because Cho

[13] Patent Owner states that it "reiterates here all the arguments made in Patent Owner's Preliminary Response" footnoting 35 pages of the Patent Owner's Preliminary Response. PO Resp. 44. Arguments not made in Patent Owner's Response, however, are waived. 37 C.F.R. § 42.120(a); *In re NuVasive*, 842 F.3d at 1380–81.

provides "a fresh mixture for use" and does not suggest long-term storage of the mixture, but, rather, teaches that long-term storage results in deterioration. *Id.* at 45–47 (emphasis omitted) (citing Ex. 1004, 55:22–25). Petitioner asserts that there is no evidence in the record that Cho's circular endplate that abuts the top of the bottle mouth provides a fluid-tight seal. *Id.* at 48 (referring to Ex. 1004, Fig. 45B). Patent Owner's position is that abutting surfaces alone is not sufficient to establish that Cho's cap is capable of retaining fluid in the bottle. *Id.* at 48–49. Patent Owner further asserts that Cho's ratchet mechanism with a saw tooth connection between the bottle and the outer cylinder means one side of each "tooth" is squeezed leaving the other side opened or not sealed. *Id.* at 49–51 (citing Ex. 1004, Fig. 43). Patent Owner concludes that because Cho's device is for immediate use of the mixture and not concerned with long-term storage, it is neither in the same field of endeavor nor attempting to solve the same problem as the '646 patent. *Id.* at 52.

Upon review of the parties' arguments and supporting evidence, we do not find Cho's device to be limited to beverages and mixtures that are used immediately after mixing. Cho states the combination of two materials is applicable to "a variety of industrial fields" including "chemicals," which appears to suggest a non-consumable mixture. Ex. 1004, 1:8–12. In addition, Cho's object of providing an additive storage container that "can be completely removed from a bottle body through an opening action of an opening unit" does not imply either consumption of the contents let alone immediate consumption of the contents. *Id.* at 2:4–6. Similarly, Cho's disclosure that storage in a mixed state for "a lengthy period" may result in the materials being "deteriorated" does not reflect any particular storage

time period, let alone immediate, but, rather, dependence on "the properties of the materials" being mixed. Ex. 1005, 55:22–25. Similarly, the '646 patent merely discloses a preferred length of time of "at least one week at room temperature" for the cells to retain their antigenicity and DNA integrity also expressed as "devoid of degradation." Ex. 1001, 16:38–40, 19:38–40, Fig. 8. In addition, Patent Owner's assertion that the abutting surfaces of Cho's circular endplate and the top of the bottle mouth would not provide a fluid-tight seal does not take into account the entirety of the connections between Cho's cap and vessel device including the threaded connection between the cap and vessel, the threaded connection between the cap and the outer cylinder of the valve, the integral connection between the inner cylinder of the valve and the cap, and the "[r]ing-type seal protrusions 636b and 636c" that are "in close contact with the inner circumferential surface of the inner cap 624, thus preventing an additive from leaking through the discharge ports." Pet. 34–35, 41, 43, 46 (quoting Ex. 1004, 49:10–21); Ex. 1004, 1:28–2:3, 2:7–10, 48:16–19, 49:5–21, 50:4–15, 55:22–25, Figs. 44, 45B.

Therefore, the preponderance of the evidence in this record shows that Cho's device is within the same field of endeavor as the '646 patent to provide an easy and safe device to mix a chemical held within a reservoir of a cap with the contents of a vessel. Ex. 1001, 4:1–4 ("The sample collection device may also allow easy and safe collection of a donor specimen . . . with no risk of exposure of the donor to the toxic solution."); Ex. 1004, 1:3–6, 1:25–27 ("a bottle . . . contain[ing] two kinds of materials in two separate spaces . . . caus[ing] the separate spaces to communicate with each other . . . so that the two materials can be mixed . . . using only a simple action");

Pet. 27 ("Like the '646 patent and Plante, Cho discloses a container 'contain[ing] two kinds of materials in two separate spaces' and subsequent mixing of those materials."); Pet. 29 ("Cho is similarly directed to an easy-to-use container for mixing two materials using only a simple action.").

Even if Cho is not within the same field of endeavor as the '646 patent and in the field of bottles for immediate use of the mixture, e.g., consumer beverage containers, as Patent Owner argues, the Petition sufficiently establishes for purposes of institution that Cho is pertinent to the problem addressed by the '646 patent. The Petition characterizes the problem addressed by Cho as "an easy-to-use container for mixing two materials using only a simple action." Pet. 29 (citing Ex. 1004, 1:3–6, 1:25–27).

Patent Owner argues that the '646 patent and Cho are solving different problems. PO Resp. 52. Rather than solving the problem of "an easy-to-use container for mixing two materials using only a simple action," as the Petition asserts, Patent Owner argues that the '646 patent provides a device to "mix the ingredients and provide a container for long-term storage and shipment" and Cho "is not concerned with long-term storage and shipment." *Id.*; Pet. 29.

> A reference is reasonably pertinent if, even though it may be in a different field from that of the inventor's endeavor, it is one which, because of the matter with which it deals, logically would have commended itself to an inventor's attention in considering his problem.

In re Clay, 966 F.2d 656, 659 (Fed. Cir. 1992).

In accord with *Clay*, a reference is reasonably pertinent if it logically would have commended itself to an inventor's attention. The '646 patent fairly describes the user of its sample container system as unskilled and it fairly describes the concerns to be addressed as the safe storage of a material

in a receptacle in the cap when it describes the "home-base sample collection . . . allow[ing] for a much wider range of research options available" and existing sample collection devices having pierceable membranes as "a safety hazard to the sample donor as any wrong manipulation can lead to piercing the membrane and exposing the [potentially toxic] solution." Ex. 1001, 2:53–58, 4:16–35. Moreover, the '646 patent explicitly states that "there is a need for safer and easier to use sample collection devices." *Id.* at 4:35–36. Similarly, Cho describes its device as "contain[ing] two kinds of materials in two separate spaces" that "communicate with each other as necessary" and the two materials mix together "using only a simple action." Ex. 1004, 1:3–6, 1:25–27.

Since sample collection containers and consumer beverage bottles are both containers for home-based use by the general public for combining an ingredient in a cap reservoir with the contents of the container, with similar concerns of ease of use, safety, and sealed reservoirs, one of skill in the art would have logically looked to other containers, such as bottles for forming a mixture, to solve problems related to ease of use, safety, and sealed reservoirs for sample collection containers. *Compare* Ex. 1004, 1:26–27 (describing the need to "mix two materials together . . . using only a simple action"), 1:29–2:3 (describing the need to "maintain[] a good seal . . . so that the additive is not oxygenated or spoiled and the additive storage container can be easily applied"), *with* Ex. 1001, 4:1–8 (describing as an object that the "sample collection device may allow easy and safe collection of a donor specimen . . . with no risk of exposure of the donor to the toxic solution [and] allow the donor to safely mix the toxic solution and the specimen . . . with no risk of exposure of the donor to . . . the toxic solution nor any other

hazard"), 4:29–31 (describing existing pierceable membrane devices that "can represent a safety hazard to the sample donor as any wrong manipulation can lead to piercing the membrane and exposing the solution"). The '646 patent recognizes that "any number of features may be integrated into the sample collection device" to contain a solution in the cap and block an aperture through which it is released "until the cap is at least partially secured to the tube." Ex. 1001, 12:63–13:4. Thus, one of skill in the art would have logically looked to other cap and tube containers for forming a mixture, such as Cho, to solve problems related to ease of use, safety, and sealed reservoirs for sample collection containers.

After determining the Petition meets the threshold inquiry of Plante and Cho being analogous art, we next consider whether a POSITA would have been motivated to modify Plante's sample collection system by replacing Plante's knife in the interest of avoiding risk of injury to a user. Pet. 30. The Petition further states substituting Cho's cap for Plante's cap would eliminate Plante's knife to release material stored in the reservoir and a POSITA would have had a reasonable expectation of success that such a substitution would provide the same desired functionality. *Id.* at 30–31.

Eliminating sharp components in Plante's sample collection system as a reason for modifying Plante with Cho's system for releasing a component in the cap has a rational unpinning based on this record. *See KSR*, 550 U.S. at 418 ("[T]here must be some articulated reasoning with some rational underpinning to support the legal conclusion of obviousness."). Petitioner's expert, Mr. Leinsing, states that it is desirable "to avoid sharp objects if possible" in the medical device field. Ex. 1002 ¶ 71. Mr. Leinsing explains how this incentive applies to Plante's sample collection kit. Mr. Leinsing

describes Plante's approach as "using a knife in the vessel, which pointed at the opening into which the saliva sample was delivered." *Id.* This is supported by the record. Ex. 1003 ¶ 35, Fig. 1 (knife 19 pointing up towards entrance 4 of receiving vessel 1). Aside from the sharpness of Plante's knife or the extent to which Plante's knife positioned inside the vessel may harm a user, there is no dispute that Plante's design includes a sharp element that is openly exposed during collection for a user to make contact. PO Resp. 16–18 (Describing how contact can be made with the sharp in Plante's design as exemplified with a commercial product RE-100 by Patent Owner's expert Dr. Wereley). Patent Owner's argument that "Plante's knife does not need to be so sharp to perform its function" underscores that the function of Plante's knife is to be sharp. *Id.* at 19.

Mr. Leinsing identifies the NSPA as support for why a POSITA designing a medical device such as a sample collection kit would have had an incentive to eliminate the sharp object completely. Ex. 1002 ¶ 71; Ex. 1015. Mr. Leinsing testifies that the NSPA impacted his own work by designing devices that eliminate or reduce the use of needles (sharps). Ex. 1002 ¶ 71. The fact that Mr. Leinsing's portfolio of inventions may include devices with sharps does not refute the fact that the NSPA motivated design choices in devices designed by Mr. Leinsing. Similarly, the fact that NSPA also recommends engineering controls for sharps does not refute the fact that the NSPA reports "needleless systems" have been shown as "extremely effective in reducing accidental sharps injuries." Ex. 1015 § 2 (7); PO Resp. 28. In addition, the '646 patent itself acknowledges that eliminating sharps is a need in the field of sample collection devices. Ex. 1001, 5:4–7 ("[T]he sample collection devices provide improved safety

for both the sample donor and the end user, since, for example, sharp objects are not included."). In sum, the preponderance of the evidence supports the stated rationale for combining the teachings of Plante and Cho. *See KSR*, 550 U.S. at 420 ("[A]ny need or problem known in the field of endeavor at the time of invention and addressed by the patent can provide a reason for combining the elements in the matter claimed."). As such, we need not address Petitioner's additional rationales for combining Plante and Cho, i.e., molding difficulties forming sharps and the simple substitution for one cap for another. PO Resp. 52–62.

Patent Owner's argument that a POSITA would not have had a reasonable expectation of success from substituting Cho's cap for Plante's cap because (1) Cho's cap would increase the risk of a defective sample, (2) Cho's cap would not fit in Plante's receiving vessel, and (3) Cho's cap includes additional features requiring complementary features on a collection tube, are unavailing because they are premised on the bodily incorporation of an embodiment of Cho's cap coupled to an embodiment of Plante's vessel. PO Resp. 62–74. "The test for obviousness is not whether the features of a secondary reference may be bodily incorporated into the structure of the primary reference . . . . Rather, the test is what the combined teachings of those references would have suggested to those of ordinary skill in the art." *In re Keller*, 642 F.2d 413, 425 (CCPA 1981); *see also In re Sneed*, 710 F.2d 1544, 1550 (Fed. Cir. 1983) ("[I]t is not necessary that the inventions of the references be physically combinable to render obvious the invention under review."); *In re Nievelt*, 482 F.2d 965, 968 (CCPA 1973) ("Combining the *teachings* of references does not involve an ability to combine their specific structures."). "[I]f a technique has been used to

improve one device, and a person of ordinary skill in the art would recognize that it would improve similar devices in the same way, using the technique is obvious unless its actual application is beyond his or her skill." *KSR*, 550 U.S. at 417.

Both Plante and Cho disclose devices comprising a container and a cap to be screwed onto the container by an unskilled user to combine the materials in each component. Ex. 1003 ¶ 41 ("[A]n unskilled user preserves the saliva sample merely by screwing the cap to the receiving vessel together."); Ex. 1004, 50:5–8 ("If a user rotates the opening unit 630 clockwise . . . the opening unit 530 moves downward due to the interaction between the external thread 612b and the internal thread 634a. As a result, the state as shown in FIG. 45A is accomplished."); Pet. 50.

Even if Cho's system is constructed from parts that differ from Plante's system, i.e., the size of the reservoir in the cap, the scale of threads, and adding or removing ratchets on the connecting surfaces between the vessel and the cap to engage parts, the Petition identifies a reason for modifying Plante with Cho's valve, namely, to replace Plante's knife in the interest of safety to the user. Pet. 30. Precedent has long held that the person having ordinary skill in the art must be regarded as skillful and ordinarily creative, not as a mere literalistic automaton. *Transocean Offshore Deepwater Drilling, Inc. v. Maersk Contractors USA, Inc.*, 617 F.3d 1296, 1304 (Fed. Cir. 2010); *In re Sovish*, 769 F.2d 738, 742 (Fed. Cir. 1985). A person having ordinary skill in the art would have understood how to size, scale, and otherwise form the sample collection kit taught by Plante using Cho's cap such that components engage each other and do not include

Plante's knife. Ex. 1019 ¶¶ 21, 23; Ex. 1022, 35:15–19, 66:3–12, 69:20–70:2.

Patent Owner's argument that the combination of Plante and Cho must fail because the benefits gained from the combination do not outweigh those lost is unavailing because "any need or problem . . . can provide a reason for combining the elements in the manner claimed." PO Resp. 74–82; *KSR*, 550 U.S. at 420. "The fact that the motivating benefit comes at the expense of another benefit, however, should not nullify its use as a basis to modify the disclosure of one reference with the teachings of another. Instead, the benefits, both lost and gained, should be weighed against one another." *Winner Int'l Royalty Corp. v. Wang*, 202 F.3d 1340, 1349 n.8 (Fed. Cir. 2000); *Medichem, S.A. v. Rolabo, S.L.*, 437 F.3d 1157, 1165 (Fed. Cir. 2006) ("a given course of action often has simultaneous advantages and disadvantages, and this does not necessarily obviate motivation to combine").

Moreover, Patent Owner's assertion that there is no benefit to be gained from the combination of Plante and Cho is not supported by the preponderance of the evidence for the reasons discussed above. PO Resp. 75 ("Starting with the benefits of the combination, there are none."). In addition to the NSPA that Petitioner cites to support a POSITA having the motivation to remove the sharp element in Plante's system, the '646 patent itself states as a benefit of the claimed design "improved safety for both the sample donor and the end user, since, for example, sharp objects are not included," suggesting that improving safety for sample donors and end users was a concern at the time of invention. Ex. 1001, 5:4–9; Pet. 30 (citing Ex. 1015; Ex. 1002 ¶ 71). Patent Owner's assertion that "Cho's cap does not fit in

Plante's receiving vessel" is a lost benefit resulting from the combination is unavailing because it does not take into account that a POSITA is "a person of ordinary creativity, not an automaton." *KSR*, 550 U.S. at 421.

Based on the foregoing, we determine that Petitioner demonstrates by a preponderance of the evidence that claim 1 would have been obvious over the combined disclosures of Plante and Cho.

b. *Claims 3–8, 11, and 12*

Claims 3–8 and 12 depend from claim 1 and claim 11 depends from claim 3.

The Petition identifies the further limitations of claims 3–8, 11, and 12 in the disclosure of Plante and/or Cho. Pet. 51–57.

Patent Owner does not address Petitioner's arguments with respect to claims 3–8, 11, and 12, beyond the arguments discussed above with respect to independent claim 1. PO Resp. 14–62.

Upon review of the parties' arguments and supporting evidence, we determine that Petitioner demonstrates by a preponderance of the evidence that dependent claims 3–8, 11, and 12 would have been obvious over the combined disclosures of Plante and Cho.

2. Unpatentability over Plante, Cho, and Maples

Petitioner asserts that claims 1, 3–8, 11, and 12 are unpatentable under 35 U.S.C. § 103(a) over the combination of Plante and Cho as discussed above in further view of Maples's disclosure to stabilize biological cells and tissues collected in prior art devices such as Plante, citing the Declaration of Dr. Vincent A. Fischetti for support. Pet. 57–60 (citing Ex. 1011 ¶¶ 32, 36; Ex. 1009, 1:25–26, 2:13–16, 4:28–31, 5:5–8, 31:1–27). In particular, Petitioner states that Plante discloses preserving DNA in a saliva sample, but

is silent as to whether DNA is preserved while the cells of the sample remain intact or after being released from the cells. *Id.* at 60 (citing Ex. 1003 ¶ 18). Petitioner contends that to the extent that claim 1's preamble is limiting and is directed to a device that preserves cells, it would have been obvious to a POSITA to preserve cells of a biological sample. *Id.* at 60 (citing Ex. 1011 ¶¶ 9, 33–37). As further support, Petitioner directs us to Maples's explicit disclosure of a Solution A, including ammonium citrate protease inhibitor, in combination with a Solution B, including formaldehyde and a buffer, preserves the antigenicity of cells. *Id.* at 59 (citing Ex. 1009, 31).

Having determined that Petitioner demonstrates by a preponderance of the evidence that claims 1, 3–8, 11, and 12 would have been obvious over the combined teachings of Plante and Cho, including Plante's disclosure of a "preserving fluid" for mixing with a biological sample and the record support for a POSITA to select such preserving fluids for a desired objective, including retention of the integrity of cells, we need not consider the further combination with Maples. Ex. 1003 ¶¶ 18 (saliva sample kit "suitable for long-term and durable storage of a DNA in a saliva sample"), 41 (disclosing filling the reservoir with a preserving fluid that preserves a saliva sample).

Nevertheless, Maples explicitly discloses solutions for preserving antigenicity of cells such that the cells' antigens are not degraded. Ex. 1009, 31:1–27, 5:5–8 (Disclosing "a method and composition for stabilizing biological cells and tissues, particular blood samples containing platelets. This method and composition prevents or reduces cellular activation and response to environmental change without changing the antigenic makeup of the cells."). As such, Maples further supports the determination that it would

have been obvious for a POSITA to select an appropriate fluid to preserve the integrity of cells in a biological sample for subsequent analysis. Patent Owner does not dispute that Maples teaches a composition for preserving the antigenicity of cells. PO Resp. 89.

Based on the foregoing, we determine that Petitioner demonstrates by a preponderance of the evidence that claims 1, 3–8, 11, and 12 would have been obvious over the combined disclosures of Plante, Cho, and Maples.

3. Unpatentability over Plante and Patterson

Petitioner asserts that claims 1, 3–8, 11, and 12 are unpatentable under 35 U.S.C. § 103(a) over the combination of Plante and Patterson because Plante discloses every element of claim 1 except for the "movable annular valve" and a person having ordinary skill in the art would have had multiple reasons to use Patterson's cap having a movable annular valve in Plante's sample collection system. Pet. 64 (citing the Declaration of Karl R. Leinsing for support, Ex. 1002 ¶¶ 140–142; Ex. 1003 ¶¶ 6, 25; Ex. 1005, Abstr.).

Petitioner relies on the same disclosures in Plante as applied to the combination of Cho discussed above. *Id.* at 66. Petitioner contends that it would have been obvious to a POSITA to use Patterson's cap having a movable annular valve in Plante's sample collection system for the reasons: (1) Patterson and Plante are in the same field of endeavor and address the same problem of providing an easy-to-use container for mixing two materials, (2) Patterson's cap with an annular valve is a safer design than Plante's approach of using a knife in the vessel in view of a federal mandate to choose devices without sharps where possible and in view of the difficulty to mold sharp thin features in plastic, and (3) it would have been a simple substitution of one known element for another—Plante's cap for Patterson's

cap to avoid the use of a knife in a vessel. *Id.* at 64–66 (citing Ex. 1002 ¶¶ 142–145). According to Petitioner, a POSITA would have expected Patterson's cap to perform successfully the same function of releasing a reagent when connected to Plante's sample collection vessel because Patterson's cap functions to release a reagent into a bottle when fastened to the bottle. *Id.* at 66 (citing Ex. 1002 ¶ 146). Also, Petitioner directs us to Patterson's disclosure that it has medical and chemical applications. *Id.* at 65 (citing Ex. 1005, 8:12–15).

a. *Claim 1*

Regarding independent claim 1, Petitioner contends Plante discloses all of claim 1's limitations for the recited sample collection vessel and cap as set forth with respect to the combination of Plante with Cho and focuses on Patterson's disclosure of claim 1's "movable annular valve." *Id.* at 66.

Regarding the "moveable annular valve" required by claim 1, Petitioner identifies an inner cylinder, outer cylinder, and fluid vent in an annotated version of Patterson's Figure 2 below. Pet. 69.

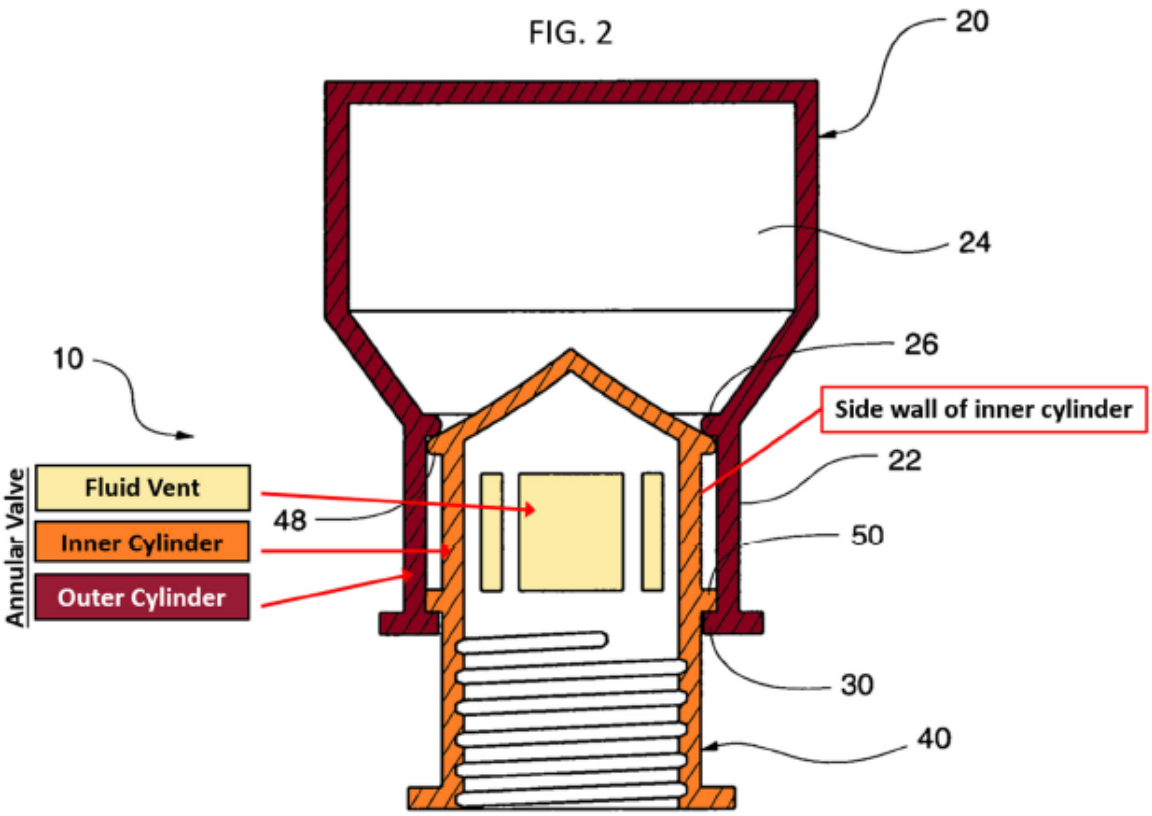

Annotated Figure 2 above is a cross-sectional view of Patterson's mixing cap shown in a closed or inactivated position. Ex. 1005, 5:11–13. Petitioner asserts that Patterson's annular valve is associated with the cap under any possible construction of "associate" because the two pieces of Patterson's mixing cap are the valve. Pet. 68. Petitioner asserts that Patterson's cap would associate with the opening of Plante's sample collection reservoir by screwing onto the opening of Plante's sample collection reservoir. *Id.* (citing Ex. 1002 ¶ 152). Petitioner identifies the required outer cylinder as Patterson's outer housing 20 in fluid-tight association with Patterson's inner tube 40 (claim 1's "inner cylinder") and the required "fluid vent" as Patterson's aperture 46. *Id.* at 69–70 (citing Ex. 1005, 4:19–26, 6:3–7, 6:33–45, Figs. 2–3; Ex. 1002 ¶¶ 156, 158). According to Petitioner, Patterson's outer cylinder is slidably engaged with

the inner cylinder, which is directly connected with the opening of the container. *Id.* at 70 (citing Ex. 1002 ¶ 158). Petitioner asserts that, under Patent Owner's interpretation of "associate," Patterson's outer cylinder is thus associated with the opening of the sample collection reservoir as required by claim 1. *Id.* Petitioner states that Patterson's inner cylinder screws onto the mouth of the container, however, a POSITA would recognize that either the inner or outer cylinder could be used to engage the container, which is a finite number of choices for the outer cylinder to be associated with the opening of the sample collection reservoir as required by claim 1. *Id.* Petitioner asserts that adapting Patterson's mixing cap so that the outer cylinder directly contacts the opening of the container merely requires "flipping the cap such that the outer cylinder engages the container and the end of the inner cylinder is closed to define the reagent chamber." *Id.* at 70–71 (citing Ex. 1002 ¶ 159).

Regarding the additional limitation "wherein the interior sidewall does not obstruct the fluid vent when the movable annular valve is open," Petitioner annotates Patterson's Figure 3 below to identify the fluid vent not obstructed by the outer cylinder. *Id.* at 74–75 (citing Ex. 1005, Figs. 3–4, 4:27–39, 6:46–67).

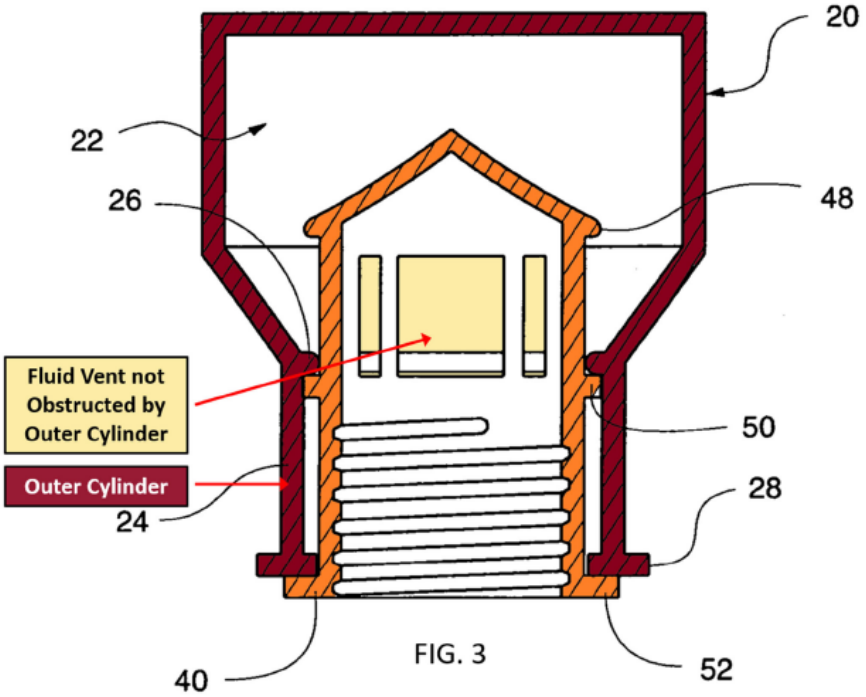

Annotated Figure 3 above shows Patterson's mixing cap in a cross-sectional side view in an open or activated position. Ex. 1005, 5:14–16.

Patent Owner contends the Petition should be denied because (1) a POSITA would not have been motivated to substitute Patterson's cap for Plante's cap and (2) the combination of Plante and Patterson lacks the claimed "cap." PO Resp. 82–88.

Petitioner's rationale for combining Plante and Patterson is similar to the rationale for combining Plante and Cho. Patterson describes its device as a "mixing cap . . . preferably pre-loaded during time of manufacture with a selected dry or liquid ingredient to facilitate subsequent consumer use" and that the pre-loaded ingredients "may be introduced or discharged into the bottle by simply depressing the outer housing over the inner tube." Ex. 1005, Abstr. The Petition asserts a POSITA would have been motivated to modify Plante's sample collection system by replacing Plante's knife for a safer design just as proposed in the context of the ground involving Cho. Pet. 65

(citing Ex. 1002 ¶ 144). The Petition further states substituting Patterson's cap (having an annular valve) for Plante's cap (having a pierceable membrane) would eliminate Plante's sharp knife to release material stored in the reservoir and a POSITA would have had a reasonable expectation of success that such a substitution would provide the same desired functionality. *Id.* at 66. As discussed above in connection with modifying Plante with Cho, "any need or problem known in the field of endeavor at the time of invention and addressed by the patent can provide a reason for combining the elements in the manner claimed." *KSR*, 550 U.S. at 420.

Like the combination of Plante and Cho, the Petition's combination of Plante and Patterson has rational underpinnings. In addition to the NSPA that Petitioner cites to support a POSITA having the motivation to remove the sharp element in Plante's system, the '646 patent itself states as a benefit of the claimed design "improved safety for both the sample donor and the end user, since, for example, sharp objects are not included," suggesting that improving safety for sample donors and end users was a concern at the time of invention. Ex. 1001, 5:4–9; Pet. 65 (referring back to Pet. 30, citing Ex. 1015; Ex. 1002 ¶ 71). Accordingly, the Petition's reasoning for combining Plante and Patterson is sufficiently supported.

Regarding whether the combination of Plante and Patterson lacks the claimed "cap," Patent Owner contends that the Petition relies on Plante for teaching the claimed "cap," however, after substituting Patterson's annular valve, Plante's cap is removed. PO Resp. 84. Specifically, Patent Owner contends that the Petition consistently uses the color blue to identify a cap in Plante, Cho, and the '646 patent's figures, therefore the lack of a blue component in Patterson's annotated Figure 3 means that the proposed

combination replaces Plante's cap with Patterson's inner and outer cylinders, which are identified with the colors orange and burgundy. *Id.* at 85–87. Patent Owner argues that, because the Petition identifies only Plante's cap for the cap limitation, the removal of Plante's cap in the substitution means the combination lacks a required claim limitation. *Id.* at 87–88.

The combination of Plante and Patterson set forth in the Petition includes the claimed "cap." Both Plante and Patterson disclose devices comprising a cap to be screwed onto a container by an unskilled user to combine the materials in each component. Ex. 1003 ¶ 41 ("[A]n unskilled user preserves the saliva sample merely by screwing the cap to the receiving vessel together."); Ex. 1005, code (54), 6:16–17 ("mixing cap 10 is preferably threadably-engaged to mouth M of bottle B"); Pet. 62. As Petitioner explains, Patterson's mixing cap 10 is made up of two pieces: outer housing 20 and inner tube 40 shown in Patterson's Figure 1 annotated by Petitioner below.

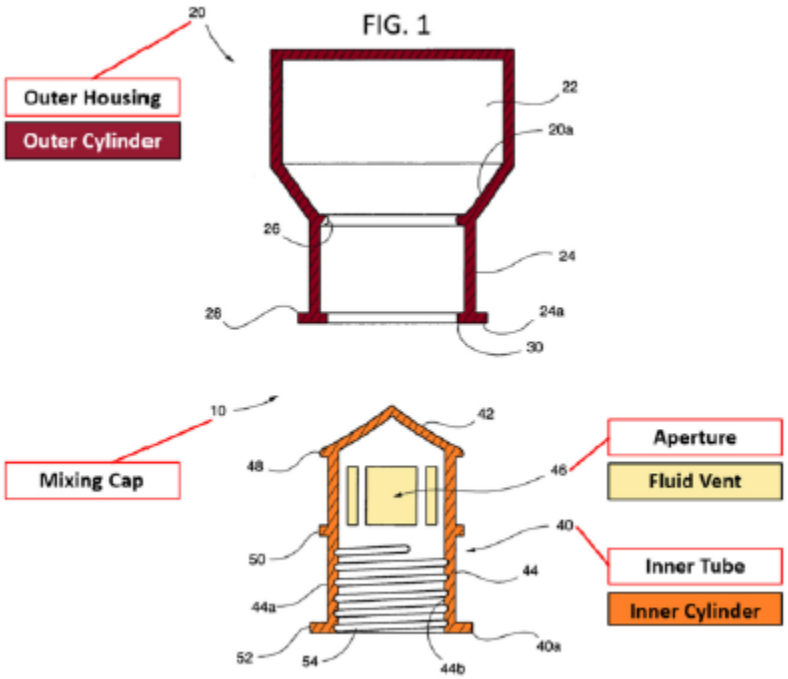

Annotated Patterson Figure 1, above, is a cross-sectional side view of a substantially bulb-shaped configuration with a tapered neck portion identified as an outer housing and an inner tube having a peaked or dome-shaped top wall integrally formed with a hollow, cylindrically shaped side wall. Ex. 1005, 5:8–10, 5:52–54, 6:3–5; Pet. Reply 22; Pet. 61. As explained in the Petition, when the outer housing and the inner tube are assembled and applied to a container, the outer cylinder is moved distally over the inner tube to expose vent 46 which allows ingredients stored in the storage receptable to mix with the contents of the container. Pet. 61–63. Patterson's assembled mixing cap thus forms an annular valve, which Petitioner asserts is associated with the cap under any possible construction of "associate." Pet. 68.

For the reasons explained above, the term "cap" means "a cover for the sample collection vessel" without any negative limitation on the manner and extent to which the reagent containing or storage portion of the sample collection device is defined by the cap. Thus, Patterson's annular valve is the claimed "cap" as that term is properly construed because it is a cover for the sample collection vessel.

In its supplemental briefing, Patent Owner argues that Patterson does not meet the limitation of "cap" under any construction of the term "cap." Paper 42, 5. Patent Owner provides multiple reasons for this assertion, including that

> the inner and outer housing that cover the vessel share at least one surface with the valve—as the outer cylinder of the valve rises and falls relative to the inner cylinder, the valve opens and closes but it is those same surfaces that constitute any alleged "cover for the sample collection vessel."

Id. (citing Ex. 1005, Figs. 2–3). Given our construction of the term "cap," as a "cover for the sample collection vessel" without any further negative limitation, Patent Owner thus points to evidence supporting Petitioner's assertion that Patterson's valve can function as a cover for a sample collection vessel. *Id.*

Furthermore, two independent structures are not necessitated by two separate claim terms according to our reviewing court. *Powell v. Home Depot U.S.A., Inc.*, 663 F.3d 1221, 1231–32 (Fed. Cir. 2011); Paper 39, 7. Thus, Patent Owner's suggestion that Patterson's mixing cap cannot satisfy both the claimed "cap" and the claimed "annular valve" is not supported by caselaw. *See Powell*, 663 F.3d at 1231–32 (rejecting an argument that limitations "cutting box interior" and "dust collection structure" can only be infringed by a device that has separate structures to function as the claimed "cutting box" and "dust collection"); Paper 42, 7. Patent Owner's assertion that Patterson's inner and outer housings that cover the vessel *can* act as a cover for the sample collection vessel confirms that these structures, whether separate or not, meet the requirements of both the "annular valve" and the "cap" required by claim 1.

Upon review of the parties' arguments and supporting evidence, we determine that Petitioner demonstrates by a preponderance of the evidence that claim 1 would have been obvious over the combined disclosures of Plante and Patterson.

b. *Claims 3–8, 11, and 12*

Claims 3–8 and 12 depend from claim 1 and claim 11 depends from claim 3.

The Petition identifies the further limitations of claims 3–8, 11, and 12 in the disclosure of Plante and/or Patterson. Pet. 76–81.

Patent Owner does not address Petitioner's arguments with respect to claims 3–8, 11, and 12, beyond the arguments discussed above with respect to independent claim 1. PO Resp. 82–88.

Upon review of the parties' arguments and supporting evidence, we determine that Petitioner demonstrates by a preponderance of the evidence that claims 3–8, 11, and 12 would have been obvious over the combined disclosures of Plante and Patterson.

4. Unpatentability over Plante, Patterson, and Maples

Petitioner asserts that claims 1, 3–8, 11, and 12 are unpatentable under 35 U.S.C. § 103(a) over the combination of Plante and Patterson as discussed above in further view of Maples's disclosure, namely to stabilize biological cells and tissues collected in prior art devices such as Plante as discussed above in connection with the further combination of Plante and Patterson, citing the Declaration of Dr. Vincent A. Fischetti for support. Pet. 81–82 (citing Ex. 1011 ¶¶ 27–37). As discussed above, Petitioner directs us to Maples's explicit disclosure of a Solution A, including ammonium citrate protease inhibitor, in combination with a Solution B, including formaldehyde and a buffer, preserves the antigenicity of cells. *Id.* at 59 (citing Ex. 1009, 31).

Because we determine that Petitioner demonstrates by a preponderance of the evidence that the subject matter of claims 1, 3–8, 11, and 12 would have been obvious over the teachings of Plante and Patterson, including Plante's disclosure of a "preserving fluid" for mixing with a biological sample and the record support for a POSITA to select such

preserving fluids for a desired objective, including retention of the integrity of cells, we need not consider the further combination with Maples. Ex. 1003 ¶¶ 18 (saliva sample kit "suitable for long-term and durable storage of a DNA in a saliva sample"), 41 (disclosing filling the reservoir with a preserving fluid that preserves a saliva sample).

Nevertheless, Maples explicitly discloses solutions for preserving antigenicity of cells such that the cells' antigens are not degraded. Ex. 1009, 31:1–27, 5:5–8 (Disclosing "a method and composition for stabilizing biological cells and tissues, particular blood samples containing platelets. This method and composition prevents or reduces cellular activation and response to environmental change without changing the antigenic makeup of the cells."). As such, Maples further supports the determination that it would have been obvious for a POSITA to select an appropriate fluid to preserve the integrity of cells in a biological sample for subsequent analysis. Patent Owner does not dispute that Maples teaches a composition for preserving the antigenicity of cells. PO Resp. 89.

Based on the foregoing, we determine that Petitioner demonstrates by a preponderance of the evidence that claims 1, 3–8, 11, and 12 would have been obvious over the combined disclosures of Plante, Patterson, and Maples.

IV. CONCLUSION[14]

Claim(s) Challenged	35 U.S.C. §	Reference(s)/Basis	Claim(s) Shown Unpatentable	Claim(s) Not Shown Unpatentable
1, 3–8, 11, 12	103(a)	Plante, Cho	1, 3–8, 11, 12	
1, 3–8, 11, 12	103(a)	Plante, Cho, Maples	1, 3–8, 11, 12	
1, 3–8, 11, 12	103(a)	Plante, Patterson	1, 3–8, 11, 12	
1, 3–8, 11, 12	103(a)	Plante, Patterson, Maples	1, 3–8, 11, 12	
Overall Outcome			1, 3–8, 11, 12	

V. ORDER

For the foregoing reasons, it is

ORDERED that claims 1, 3–8, 11, and 12 of the ’646 patent have been shown to be unpatentable;

FURTHER ORDERED that the Motion to Exclude (Paper 30) is granted; and

[14] Should Patent Owner wish to pursue amendment of the challenged claims in a reissue or reexamination proceeding subsequent to the issuance of this decision, we draw Patent Owner’s attention to the April 2019 *Notice Regarding Options for Amendments by Patent Owner Through Reissue or Reexamination During a Pending AIA Trial Proceeding. See* 84 Fed. Reg. 16,654 (Apr. 22, 2019). If Patent Owner chooses to file a reissue application or a request for reexamination of the challenged patent, we remind Patent Owner of its continuing obligation to notify the Board of any such related matters in updated mandatory notices. *See* 37 C.F.R. §§ 42.8(a)(3), (b)(2).

FURTHER ORDERED that because this is a Final Written Decision, parties to this proceeding seeking judicial review of the Decision must comply with the notice and service requirements 37 C.F.R. § 90.2.

For PETITIONER:

Joseph F. Jennings
Ali S. Razai
Paul N. Conover
Benjamin B. Anger
KNOBBE MARTENS OLSON & BEAR, LLP
2JFJ@knobbe.com
2AZR@knobbe.com
2PNC@knobbe.com
2BBA@knobbe.com

For PATENT OWNER:

Mehran Arjomand
Brian M. Kramer
Alex Yap
Drew Hillier
MORRISON & FOERSTER LLP
marjomand@mofo.com
bmkramer@mofo.com
ayap@mofo.com
dhillier@mofo.com