US010292498B2

(12) **United States Patent**
DeJule et al.

(10) **Patent No.: US 10,292,498 B2**
(45) **Date of Patent: May 21, 2019**

(54) **APPARATUS WITH WEIGHT RESPONSIVE CHANGEABLE ADJUSTING CHARACTERISTICS**

(71) Applicants: **Aaron DeJule**, River Forest, IL (US); **Scott Padiak**, Glance, IL (US); **Paul C. Evans**, Bellaire, MI (US)

(72) Inventors: **Aaron DeJule**, River Forest, IL (US); **Scott Padiak**, Glance, IL (US); **Paul C. Evans**, Bellaire, MI (US)

(*) Notice: Subject to any disclaimer, the term of this patent is extended or adjusted under 35 U.S.C. 154(b) by 272 days.

(21) Appl. No.: **15/040,735**

(22) Filed: **Feb. 10, 2016**

(65) **Prior Publication Data**

US 2016/0227935 A1 Aug. 11, 2016

Related U.S. Application Data

(60) Provisional application No. 62/114,706, filed on Feb. 11, 2015.

(51) **Int. Cl.**
A47C 7/44 (2006.01)
A47C 1/032 (2006.01)
A47C 31/12 (2006.01)

(52) **U.S. Cl.**
CPC ***A47C 7/445*** (2013.01); ***A47C 1/03266*** (2013.01); ***A47C 1/03277*** (2013.01); ***A47C 7/441*** (2013.01); ***A47C 7/443*** (2013.01); ***A47C 31/126*** (2013.01)

(58) **Field of Classification Search**
CPC A47C 7/445; A47C 7/441; A47C 1/03277; A47C 1/03266
See application file for complete search history.

(56) **References Cited**

U.S. PATENT DOCUMENTS

4,911,501	A *	3/1990	Decker	A47C 1/03255 297/285
4,962,962	A	10/1990	Machate et al.	
6,250,715	B1 *	6/2001	Caruso	A47C 1/03 297/300.2
8,025,334	B2	9/2011	Schmitz et al.	
2006/0202530	A1 *	9/2006	Lin	A47C 1/03238 297/300.1
2008/0088163	A1 *	4/2008	Sander	A47C 1/03255 297/300.4

(Continued)

FOREIGN PATENT DOCUMENTS

DE 37 00447 A1 1/1987

Primary Examiner — Timothy J Brindley
(74) *Attorney, Agent, or Firm* — Wood, Phillips, Katz, Clark & Mortimer

(57) **ABSTRACT**

A reconfigurable apparatus having: a frame; at least a first component on the frame upon which a force is applied in a first manner in using the apparatus for its intended purpose; and at least a second component on the frame that is movable relative to the at least first component and/or the frame and upon which a force can be applied in a second manner to reconfigure the apparatus by moving the at least second component relative to the at least first component and/or the frame. An adjusting assembly cooperates between the at least first component and the at least second component and is configured so that as an incident of the force being applied in the first manner changing, the force being applied in the second manner required to reconfigure the apparatus changes.

22 Claims, 6 Drawing Sheets

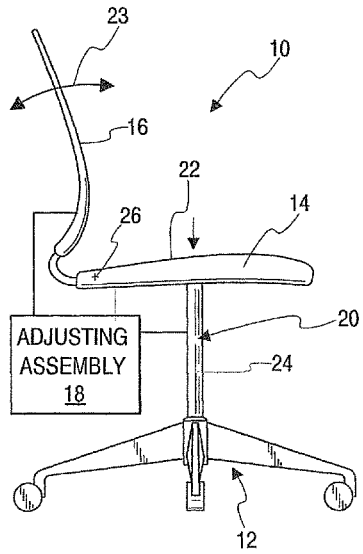

MillerKnoll, Ex. 1002

(56) **References Cited**

U.S. PATENT DOCUMENTS

2009/0261637	A1*	10/2009	Schmitz	A47C 1/03255 297/217.2
2009/0267394	A1*	10/2009	Bock	A47C 1/03255 297/300.2
2012/0025574	A1*	2/2012	Wilkinson	A47C 1/03 297/300.1
2013/0169017	A1*	7/2013	Masunaga	A47C 1/03255 297/320
2015/0123441	A1*	5/2015	Duke	A47C 1/03255 297/300.4
2016/0100691	A1*	4/2016	Masunaga	A47C 7/462 297/285

* cited by examiner

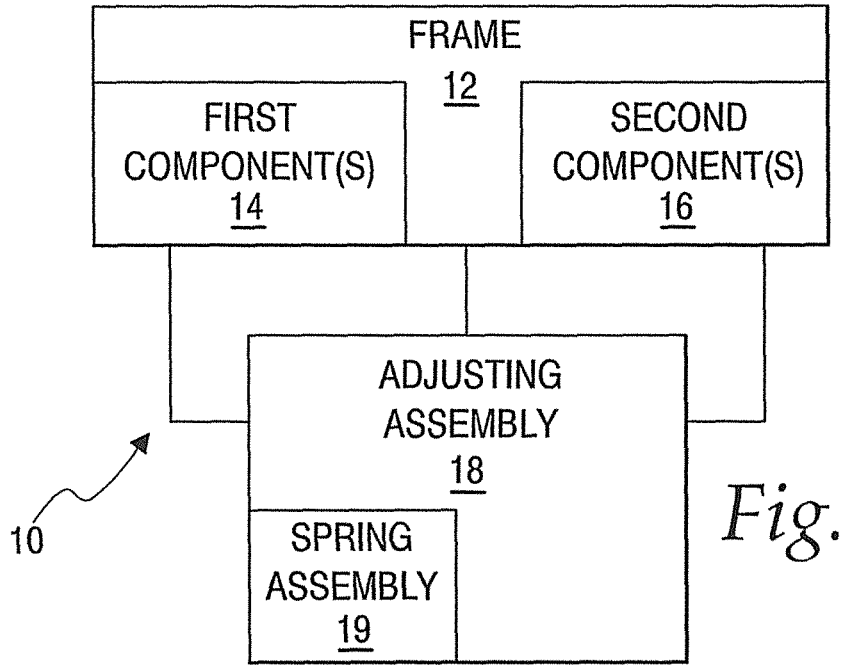
FRAME
12
FIRST COMPONENT(S)
14
SECOND COMPONENT(S)
16
ADJUSTING ASSEMBLY
18
SPRING ASSEMBLY
19
10

Fig. 1

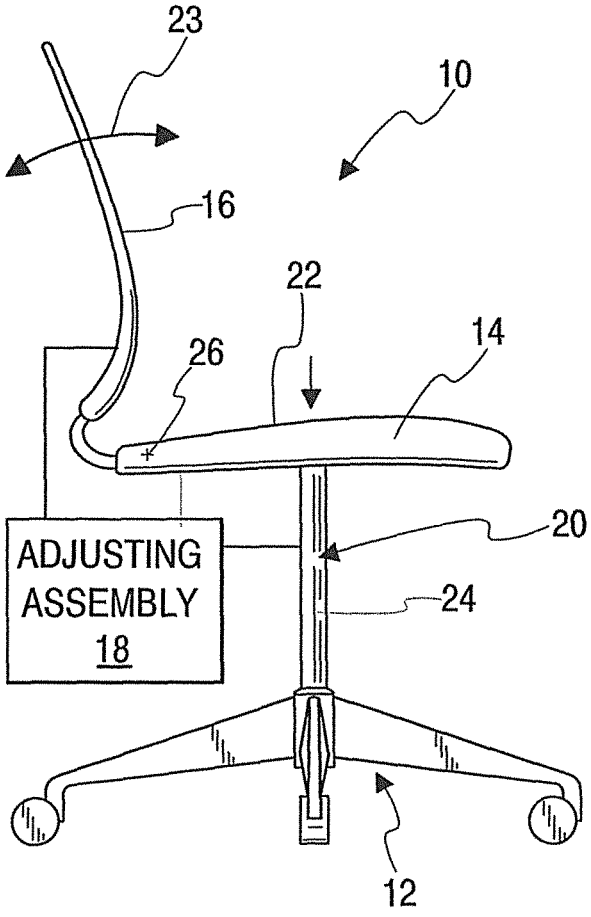
23
10
16
22
14
26
20
24
ADJUSTING ASSEMBLY
18
12

Fig. 2

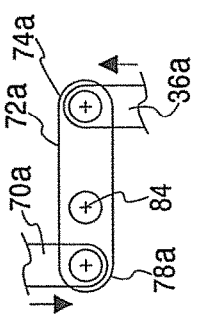

Fig. 6

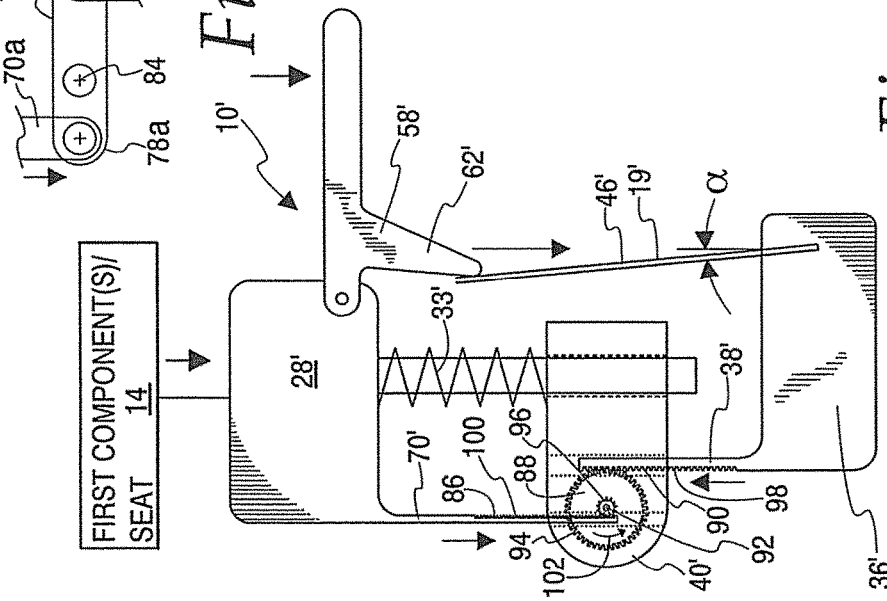

Fig. 7

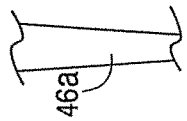

Fig. 5

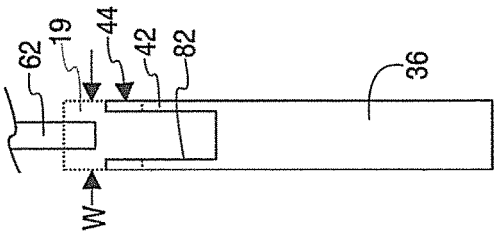

Fig. 4

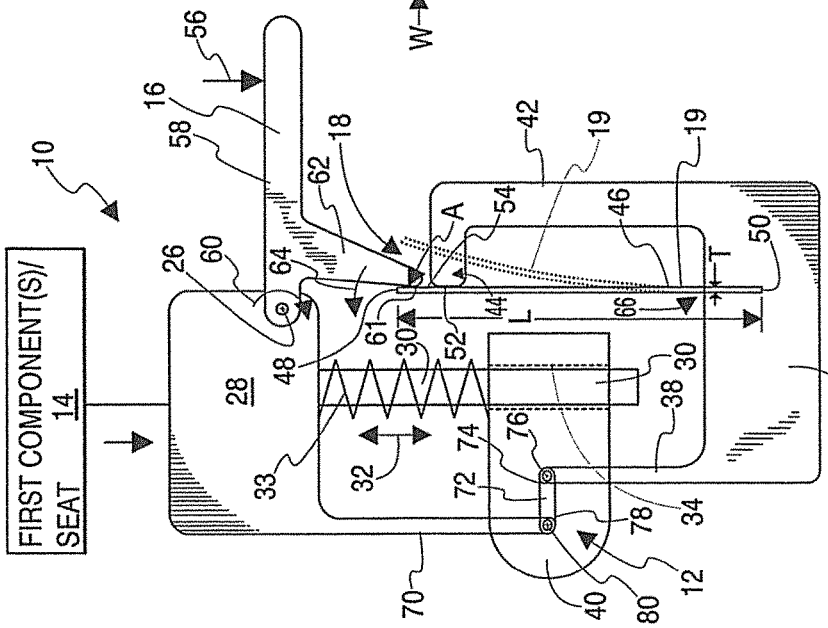

Fig. 3

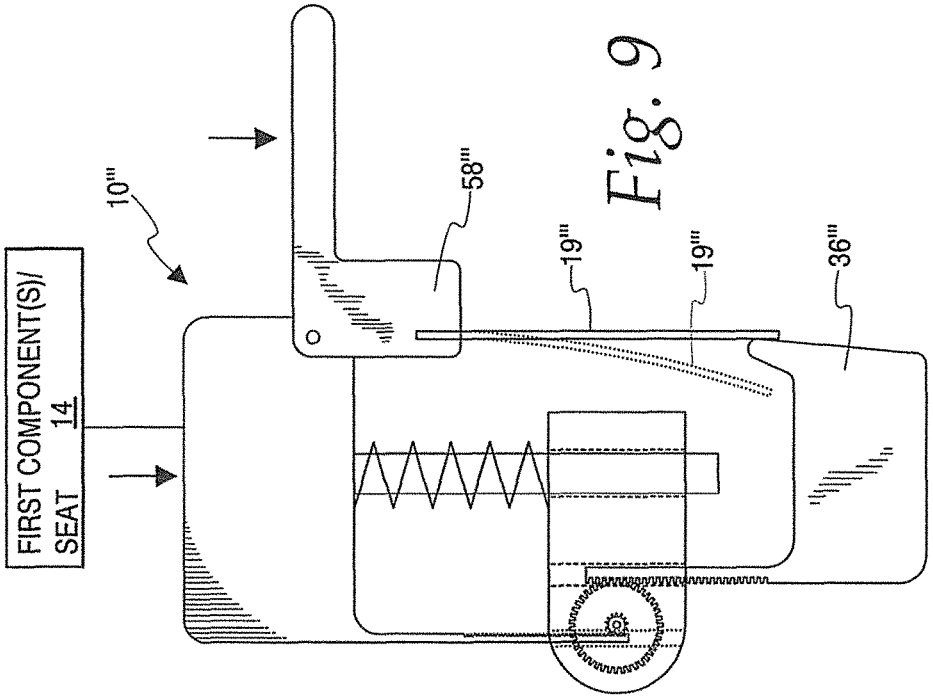
FIRST COMPONENT(S)/
SEAT 14
10'''
58'''
19'''
19'''
36'''

Fig. 9

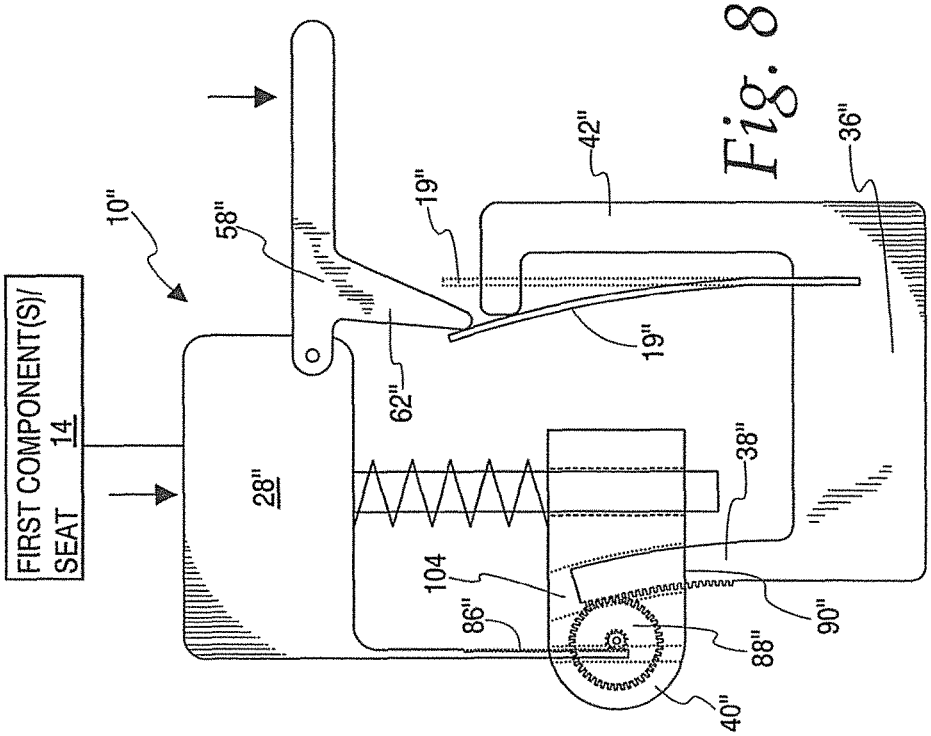
FIRST COMPONENT(S)/
SEAT 14
10''
58''
19''
42''
36''
62''
19''
28''
38''
104
86''
88''
90''
40''

Fig. 8

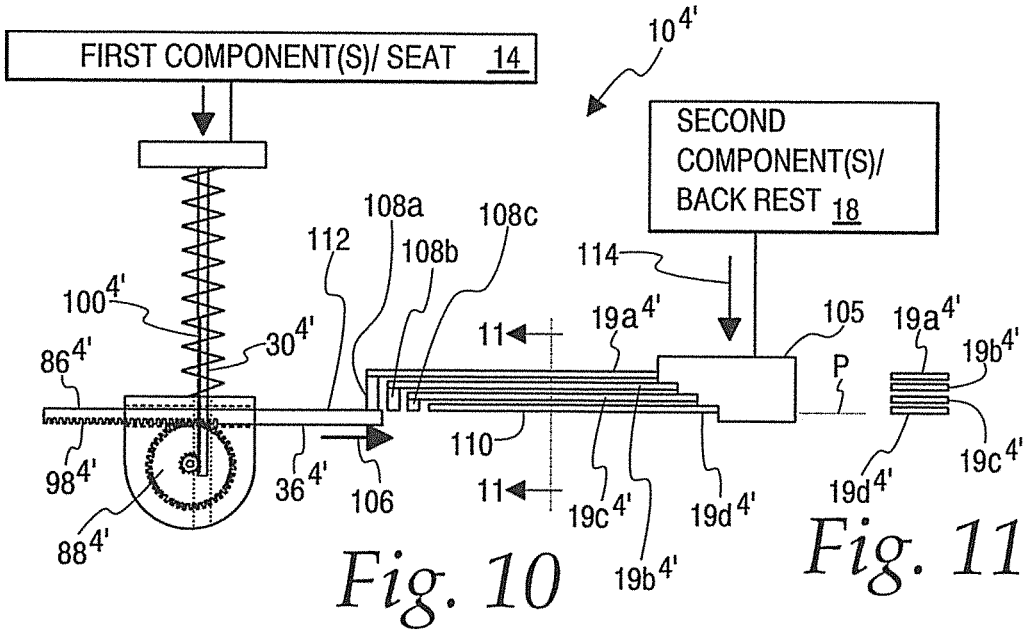

Fig. 10

Fig. 11

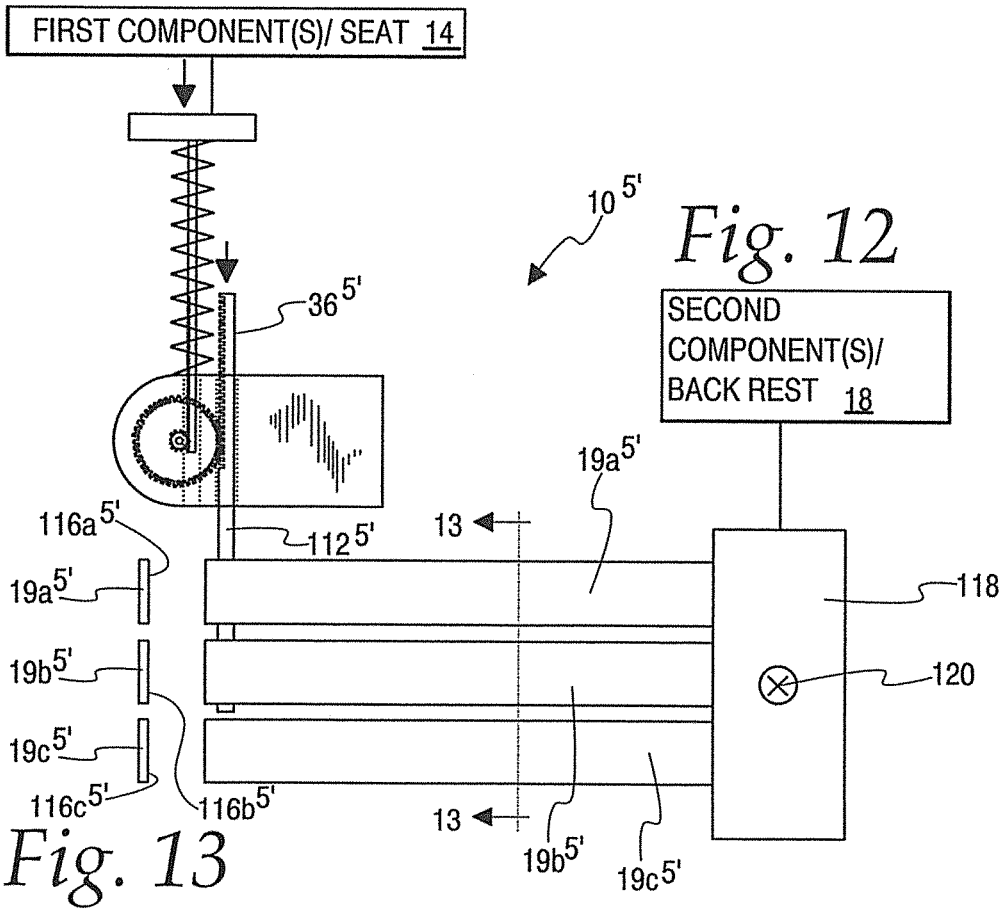

Fig. 12

Fig. 13

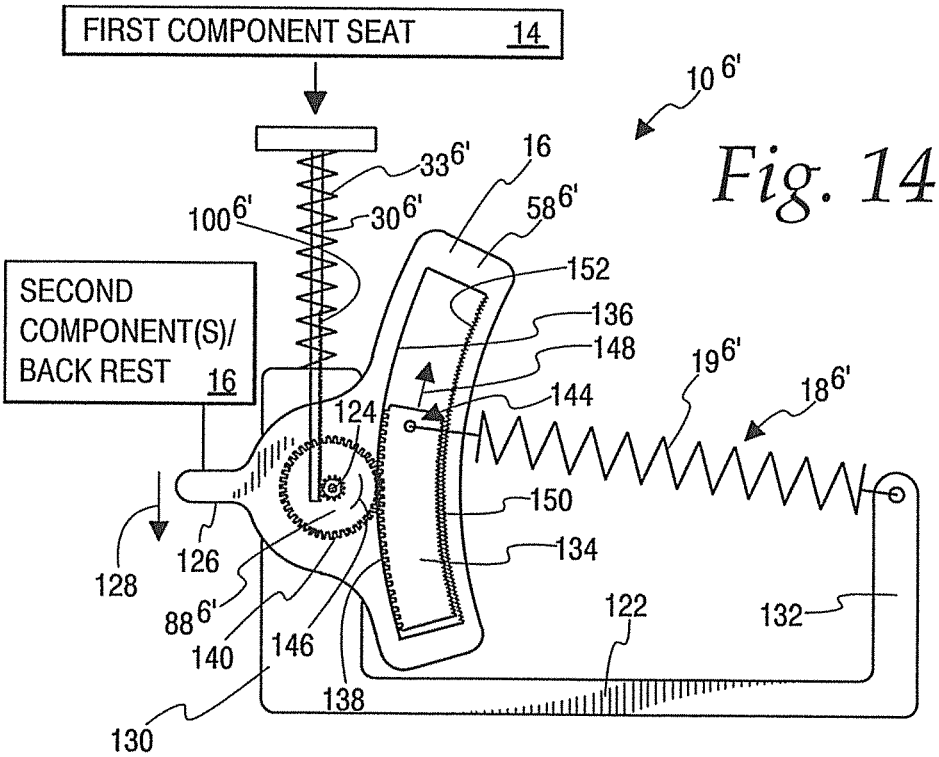
FIRST COMPONENT SEAT 14
SECOND COMPONENT(S)/ BACK REST 16
10 6'
33 6'
16
100 6'
30 6'
58 6'
152
136
148
19 6'
18 6'
144
124
150
134
128
126
88 6'
140
146
138
130
122
132

Fig. 14

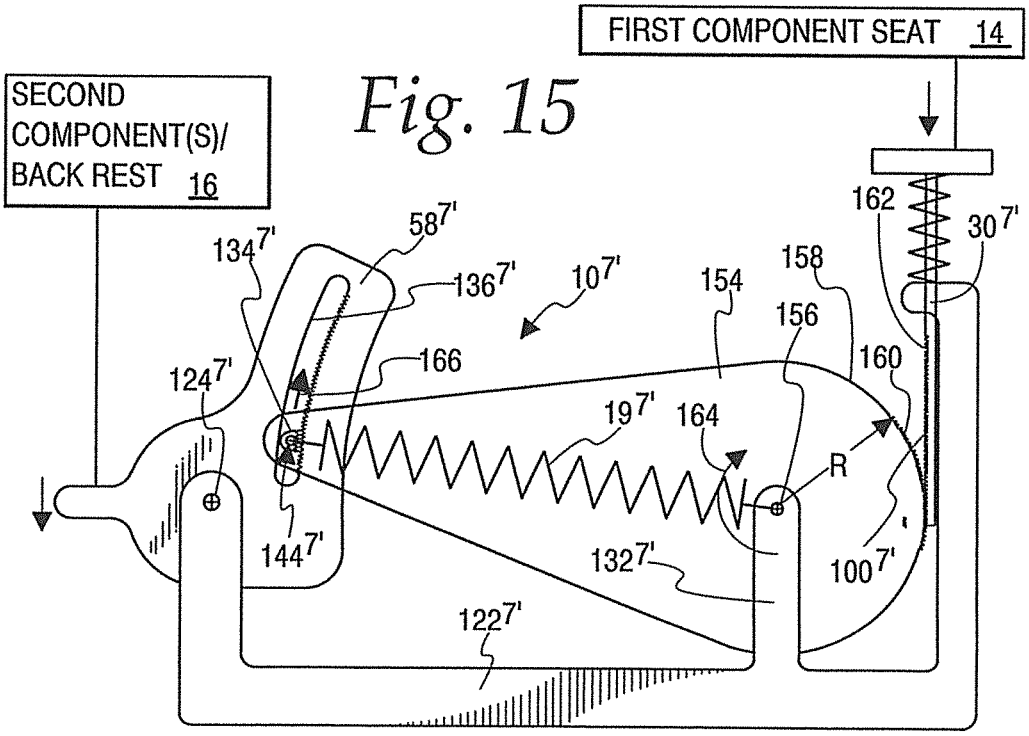
FIRST COMPONENT SEAT 14
SECOND COMPONENT(S)/ BACK REST 16
162
30 7'
58 7'
134 7'
136 7'
10 7'
154
158
156
160
166
124 7'
19 7'
164
R
144 7'
132 7'
100 7'
122 7'

Fig. 15

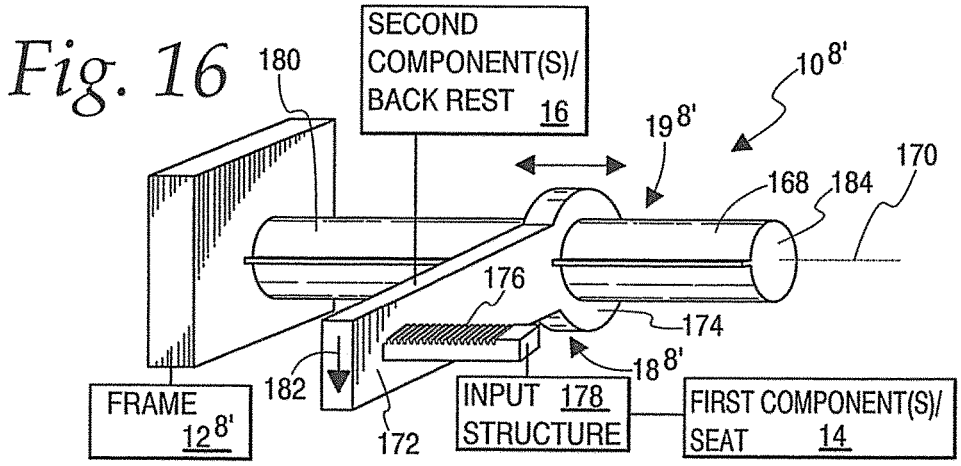

Fig. 16

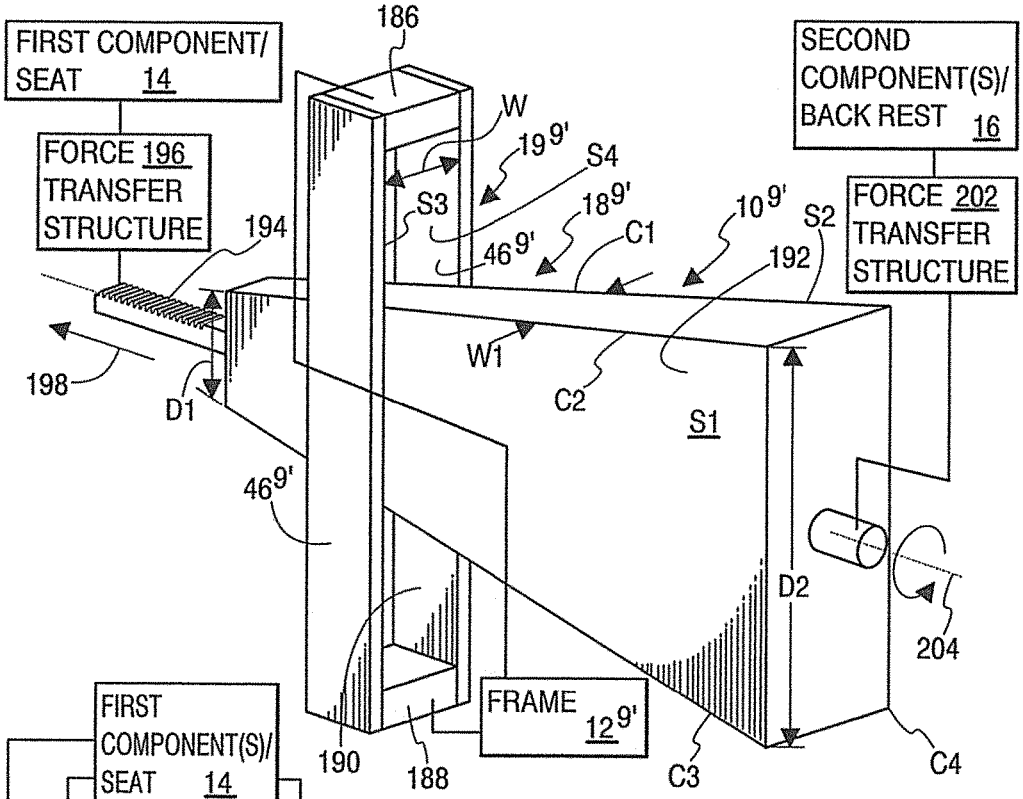

Fig. 17

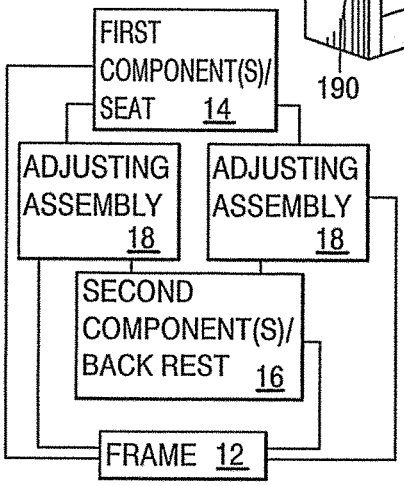

Fig. 18

APPARATUS WITH WEIGHT RESPONSIVE CHANGEABLE ADJUSTING CHARACTERISTICS

BACKGROUND OF THE INVENTION

Field of the Invention

This invention relates to apparatus upon which variable weight is applied during normal use and, more particularly, to an apparatus having at least one part with different adjusting characteristics during normal use depending upon the particular applied weight.

Background Art

A very significant percentage of furniture sold commercially has an ability to be adjusted/reconfigured to accommodate users with different body types and demands. As one example, task chairs are routinely engineered so that a single design can be offered with a substantial amount of versatility in terms of how it can be adapted to size and weight of different individuals so as to optimize function and comfort level.

In a typical task chair construction, a wheeled frame supports a vertically adjustable seat. A back rest is integrated into the frame and/or seat so that it can be tilted or reclined to accommodate a user's normal movements and/or to allow inclined back positions to be comfortably maintained by the user's upper torso weight as he/she is sitting. The task chairs may be made with or without armrests. When utilized, armrests are commonly made to be at least vertically adjustable to allow comfortable support for a user that may be different depending upon the particular user's build and/or the task(s) to be performed using the chair.

Reconfigurable designs are also commonly incorporated into seating used for leisure activities. Reading chairs and sectional pieces on modular furniture commonly have such an adjusting capability.

With a single design, performance of a particular seating apparatus will be different depending upon the weight of a user. For example, a heavier individual may be able to comfortably urge a back rest towards an inclined position and comfortably maintain potentially a number of different, desired, inclined positions within a range. On the other hand, a lighter individual with the same design may have to engage in a more unnatural movement and constantly exert a pressure on the seat back to prevent it from returning to its normal upright position, generally maintained through some sort of biasing mechanism.

Similar tilt features may be integrated into the seat itself with a user's weight affecting how the mechanisms will operate.

One industry solution to the above problem is to provide manual adjusting capabilities whereby biasing forces on movable components can be changed. For example, a mechanism has been incorporated that allows a user to change a spring force on a back rest to be more compatible with that user's weight.

Tilt and tension adjustment is typically achieved by rotating a knob or pulling a lever, which loads a spring. Once the chair is optimally adjusted, the user can recline to a comfortable backward distance. However, to optimize balance, the user must iteratively lean back and adjust. This process of adjusting tension and tilt by pulling a lever or turning a knob may require many rotations or pulls depending on the weight of the previous user, resulting in potentially wasted time and imperfect adjustments.

With the multitude of different manual adjusting capabilities currently in existing furniture designs, user operation

is becoming more complicated. Even a basic task chair often has multiple actuators which a user is required to manually operate to customize a chair for his/her purposes. Oftentimes, such mechanisms are confusing to users who may default to simply using a chair in its current configuration, even if not optimally configured. This problem is aggravated when persons routinely move from chair to chair during a typical work day in certain office environments in which there are group meetings, training, collaboration at different locations, sharing of resources such as at computer stations, etc. This same sharing of chairs occurs in classrooms, libraries, open plan offices, etc.

The current demand for versatility may demand integration of adjusting mechanisms on even base line furniture. To control manufacturing costs, the quality of many of these mechanisms, and potentially the overall chair, may be compromised.

The challenges of providing customizable adjusting systems, while demonstrated in the chair environment above, is not so limited. Many different apparatus use adjusting components that rely on a certain balance that may be affected by a variable weight application encountered in normal use. As but one example, desktop mechanisms are now evolving which allow a user to elevate a work surface so that he/she has the option of either sitting or standing while working on a computer or performing other routine work day tasks. Ideally, a user has the ability to raise and lower the work surface in a range, and to maintain a desired position, without having to operate any locking or adjusting mechanisms. Given that different jobs require placement of different items on the work surface, the applied weight on the work surface may vary considerably, which makes a generic design difficult to practically construct.

These problems are contended with also in different environments and with different types of equipment outside of the furniture arena. In any environment wherein components are adjustable, designers strive to design systems so that they are affordable, reliable, and user friendly. Balancing these often competing objectives remains an ongoing challenge.

SUMMARY OF THE INVENTION

In one form, the invention is directed to a reconfigurable apparatus having: a frame; at least a first component on the frame upon which a force is applied in a first manner in using the apparatus for its intended purpose; at least a second component on the frame that is movable relative to the at least first component and/or the frame and upon which a force can be applied in a second manner to reconfigure the apparatus by moving the at least second component relative to the at least first component and/or the frame; and an adjusting assembly cooperating between the at least first component and the at least second component. The adjusting assembly is configured so that as an incident of the force being applied in the first manner changing, the force being applied in the second manner required to reconfigure the apparatus changes.

In one form, the second component is guided in pivoting movement relative to the at least first component and/or the frame around an axis.

In one form, the reconfigurable apparatus is a piece of furniture.

In one form, the reconfigurable apparatus is a chair. The at least first component is in the form of a seat upon which a user applies the force in the first manner by sitting in the chair.

In one form, the at least second component is in the form of a back rest against which a user seated in the chair leans to exert the force in the second manner to reconfigure the chair.

In one form, the adjusting assembly includes a spring assembly that is configured to exert a force that resists movement of the at least second component and that varies as a magnitude of the force applied in the first manner varies.

In one form, the spring assembly has a leaf spring with a length that is bendable about a fulcrum location. The adjusting assembly and at least second component are configured so that as the force applied in the first manner changes in magnitude, an effective length of the leaf spring changes.

In one form, the adjusting assembly is configured so that an increase in magnitude of the force applied in the first manner causes an increase in magnitude of the force applied in the second manner required to reconfigure the apparatus.

In one form, the leaf spring has a cross-sectional shape, as viewed orthogonally to its length, that is non-uniform over at least a portion of the length of the leaf spring.

In one form, the spring assembly has a plurality of leaf springs each with a length that bends around a fulcrum location.

In one form, the adjusting assembly and at least second component are configured so that a different number of said plurality of leaf springs exerts a force that resists movement of the at least second component based upon a magnitude of the force applied in the first manner.

In one form, the spring assembly has an elongate spring component with a length that exerts the force that resists movement of the at least second component in line with the length of the spring.

In one form, the second component is guided in pivoting movement relative to the at least first component and/or the frame around an axis. The second component and adjusting assembly are configured so that the elongate spring component exerts the force that resists movement of the at least second component at a distance from the axis that changes as a magnitude of the force applied in the first manner changes.

In one form, the spring assembly has at least one leaf spring.

In one form, the at least one leaf spring has a length and spaced supported ends. The apparatus further includes an actuating component that is configured to bear against the one leaf spring between the spaced supported ends to resist movement of the at least second component as the force is applied in the second manner with a magnitude that reconfigures the apparatus.

In one form, the spring assembly has a torsion component with an axis. The apparatus further includes an actuating component that is configured to turn the torsion component around the axis to generate the force that resists movement of the at least second component as the force is applied in the first manner with a magnitude that reconfigures the apparatus.

In one form, the actuating component and torsion component are configured so that the actuating component engages the torsion component at different locations along the axis of the torsion component as a magnitude of the force applied in the first manner changes.

In one form, the adjusting assembly has cooperating toothed elements that move relative to each other as a magnitude of the force applied in the first manner reaches a predetermined level.

In one form, the seat is configured to move vertically relative to the frame with the first force applied in the first manner with a magnitude that reaches a predetermined level.

In one form, the apparatus further includes a supporting biasing assembly that normally biasably urges the seat upwardly relative to the frame.

BRIEF DESCRIPTION OF THE DRAWINGS

FIG. **1** is a schematic representation of a reconfigurable apparatus, according to the present invention;

FIG. **2** is a side elevation view of a task chair, that is one representative form of apparatus as shown in FIG. **1**, and incorporating an adjusting assembly according to the present invention;

FIG. **3** is a partially schematic representation of one specific form of adjusting assembly, integrated into the apparatus in FIGS. **1** and **2**;

FIG. **4** is a fragmentary view of a part of the adjusting assembly in FIG. **3**, which utilizes a leaf spring, and from a different perspective;

FIG. **5** is an enlarged, fragmentary view of a modified form of a leaf spring utilized on the apparatus in FIGS. **3** and **4**;

FIG. **6** is an enlarged, fragmentary, elevation view of a linkage, modified from a corresponding linkage as used on the apparatus in FIGS. **3** and **4**;

FIGS. **7-16** are partially schematic representations of apparatus incorporating different forms of adjusting assemblies, according to the invention;

FIG. **17** is a schematic representation of a further modified form of reconfigurable apparatus, according to the present invention; and

FIG. **18** is a schematic representation of adjusting assemblies, according to the invention, acting between separate components on a frame.

DETAILED DESCRIPTION OF THE PREFERRED EMBODIMENT

In FIG. **1**, a reconfigurable apparatus, according to the present invention, is shown in schematic form at **10**. The apparatus **10** consists of a frame **12** and at least a first component **14** on the frame **12** upon which a force is applied in a first manner in using the apparatus **10** for its intended purpose.

At least a second component **16** is provided on the frame **12** and is movable relative to the at least first component and/or the frame **12**. A force can be applied in a second manner upon the at least second component to reconfigure the apparatus **10** by moving the at least second component **16** relative to the at least first component and/or the frame **12**.

An adjusting assembly **18** cooperates between the at least first component **14** and the at least second component **16** and is configured so that, as an incident of the force being applied in the first manner changing, the force applied in the second manner required to reconfigure the apparatus **10** changes.

The adjusting assembly **18** includes a spring assembly **19**. The spring assembly **19** is configured to exert a force that resists movement of the at least second component **16** that varies as a magnitude of the force applied in the first manner varies.

The generic showing of the apparatus **10** is intended to encompass a wide range of different products and different applications. The inventive concepts can be used in virtually

any system or apparatus wherein its normal intended use requires the application of a force on a first component and wherein that force on the first component impacts a force required to be applied to a second component to reconfigure the apparatus as contemplated during use.

While not intended to be limiting, the detailed description herein will be focused upon furniture and, more particularly, a chair construction. This application of the inventive concepts is intended to be exemplary in nature only and should not be viewed as limiting the inventive concepts to the specific type of apparatus described in detail herein. Further, the schematic showing in FIG. **1** is intended to encompass not only a wide range of different systems/apparatus, but different forms of components and their interaction for each such system/apparatus.

For example, interlocking toothed components are described, in exemplary forms below. The invention contemplates not only different types of toothed components, such as gears, differential gears, epicyclic gears, rack and pinion arrangements, etc., but also virtually an unlimited number of different interengaging components, such as sprockets and chains, pulleys and cables, mechanisms using levers, pistons, different types of linkages, etc.

In FIG. **2**, one exemplary apparatus **10** is shown in the form of a task chair, in this case without armrests. Of course, armrests might be incorporated and might also have parts thereof movable in different manners depending upon the weight of the user, as hereinafter explained.

The chair **10** has a wheeled frame **12** with a vertically extending pedestal assembly **20**. The first component **14** is in the form of a conventional-type seat with an upwardly facing user support surface **22**. In this case, the aforementioned force applied in the first manner is the weight of the user exerted downwardly on the support surface **22** as he/she sits on the chair **10**.

A corresponding second component **16** is in the form of a back rest against which a seated user leans to exert the aforementioned force in the second manner to reconfigure the chair **10**. That is, the back rest moves relative to the frame **12** and first component **14**, as the user leans back and forth while seated, generally in a manner as indicated by the double-headed arrow **23**.

The adjusting assembly **18**, as shown schematically in FIG. **2**, acts between the first component/seat **14** and second component/back rest **16** directly and/or through the frame **12**. The adjusting assembly **18** may be added to the frame **12** by attachment thereto, virtually anywhere thereon, or integrated thereinto, as by being constructed within a hollow **24** on the pedestal assembly **20**.

The chair **10** may incorporate one or more adjusting features other than one that permits reconfiguration by changing the angle of the second component/back rest **16**. The adjusting assembly **18** may be integrated into the mechanisms associated with these other features. Alternatively, the other features may operate without effect by the adjusting assembly **18**.

For purposes of simplicity, the second component/back rest **16** will be shown as repositionable relative to the first component/seat **14** to reconfigure the chair **10** by movement of the second component/back rest **16** relative to the first component/seat **14** and frame **12** around a pivot axis **26**. This particular connection should not be viewed as limiting.

Exemplary specific forms of the adjusting assembly **18** will now be described. As noted above, virtually an unlimited number of different variations of adjusting assembly are contemplated within the generic showing of FIGS. **1** and **2**. These specific forms are exemplary in nature only. These particular mechanisms will also be described with respect to the apparatus in the form of a chair as shown in FIG. **2**. Again, the particular nature of the apparatus is not limited to a chair or furniture, although it has particular applicability in this category of product.

In FIGS. **3** and **4**, the first component/seat **14** (hereinafter referred to only as the representative chair "seat **14**") is integrated into a support **28** that has a depending post **30** that is slidable guidingly vertically, as indicated by the double-headed arrow **32**, in a guide channel **34** on the frame **12**. A biasing assembly, shown in one exemplary form as a coil spring **33**, normally biasably urges the seat **14** upwardly relative to the frame **12**.

A generally U-shaped member **36** has one leg **38** of the "U" mounted on a frame part **40**. The other leg **42** of the "U" has an offset bracing end **44**.

For purposes of simplicity, the support **28** and member **36** can be considered to be part of the frame **12** and/or the adjusting assembly **18**. Similarly, the component **58** can be considered to be part of the back rest **16** and/or the adjusting assembly **18**.

The spring assembly **19** in this embodiment is in the form of a leaf spring. The leaf spring **19** has an elongate body **46** with a length L between spaced ends **48**, **50**, a width W, and a thickness T.

The leaf spring end **19** is anchored in the member **36** to project in cantilever fashion vertically upwardly therefrom. In this embodiment, the body **46** of the leaf spring **19** is preloaded so that it naturally assumes the dotted line shape and position.

The bracing end **44** of the member **36** is bifurcated, as seen in FIG. **4**, with spaced edges **52** (one shown) at the extremity of the bracing end **44** engageable with one surface **54** of the leaf spring body **46** to maintain the body **46** in the straight vertical orientation, as shown in FIG. **3**.

A part of the second component/back rest **16** (hereafter referred to only as the representative chair "back rest **16**") is connected to the support **28** for movement relative thereto around the axis **26** as seen in FIG. **2**. As a user situated on the seat **14** leans against the back rest **16**, a force is generated as shown by the arrow **56** on the back rest component **58** that tends to pivot the component **58** in the direction of the arrow **60** around the axis **26**.

The component **58** is configured so that an edge **61** on a cantilevered part **62** thereof bears against the leaf spring surface **54**. In the depicted state, this produces a force upon the leaf spring body **46**, at a location A along the length of the body **46**, that tends to bend the body **46** in the direction of the arrow **64** around a fulcrum location at **66** where the body **46** projects away from the part of the member **36** in which it is anchored. The leaf spring **19** thus biasably resists movement of the component **58**, and the back rest **16** of which the component **58** is a part, with a first force.

The configuration in FIG. **3**, while it could show a starting state without any force application on the seat **14**, is also representative of the overall state of the apparatus **10** with an individual of a first weight seated thereon. This is an equilibrium position for the chair **10** resulting from the balancing of the user's weight and the upward biasing force generated by the spring **33** acting between the frame **12** and the seat **14** through the support **28**.

In the event that an individual of greater weight assumes a sitting position on the seat **14**, the support **28** and component **58** will translate further downwardly against the force of the spring **33**, which causes the edge **61** on the back rest component **58** to bear upon the leaf spring **19** at a location below the location A. As a result, a shorter moment

arm is established between the location where the edge **61** on the part **62** contacts the surface **54** and the fulcrum location at **66**. Thus, the leaf spring **19** has an effectively shorter length, whereby a greater force is required to be applied to the leaf spring **19** to effect bending thereof as would in turn allow movement of the back rest **16** to reconfigure the chair **10**.

To stabilize the support **28**, a depending arm **70** thereon connects to the frame part **40** through a link **72**. One link end **74** moves about an axis **76** that is fixed relative to the frame part **40**. The other link end **78** pivotally connects to the arm **70** for movement about an axis **80**.

The bifurcated configuration of the leg **42** allows the part **62** on the component **58** to move in an opening **82** through the region at the offset bracing end **44** so that the member **36** does not interfere with the back rest component **58** as the back rest component **58** lowers under increasing user weight.

Accordingly, an increase in the weight of a user causes the leaf spring **19** to produce a greater resistance to movement of the back rest **16** relative to the frame **12**. As a result, the chair is self-adjusting. The parts thereof can be engineered so that a desired relationship between the user's weight and the force required to move the back rest **16** are appropriately established.

In designing the chair **10** using a leaf spring component, the leaf spring body **46** may have a uniform cross-sectional shape as viewed orthogonally to its length. Alternatively, this shape may be non-uniform over at least a portion of its length. For example, as shown for a portion of the length of a modified form of body **46***a*, as shown in FIG. **5**, the cross-sectional area varies progressively.

Tapering the cross-sectional area of the leaf spring over its length may allow further tuning of performance. Thickened regions may be provided to produce larger resistance forces for users at the higher weight end of the functional range.

The leaf spring material may be metal, plastic, a composite, etc. The leaf spring may be straight, curved, with changing cross-sectional shapes, etc. Changing shapes, preloading, changing dimensions, etc., are just examples of options that might be practiced to design and tune the adjusting assemblies so that they adapt more appropriately to users throughout a workable user weight range.

In a still further modified form of the structure in FIG. **3**, as shown in FIG. **6**, the link **72***a*, corresponding to the link **72**, can be connected to the frame **12** for pivoting movement about an axis **84** between its ends **74***a*, **78***a*. Accordingly, as the arm **70***a* moves downwardly under increasing user weight, link **72***a* pivots around the axis **84** so that the member **36***a* simultaneously moves upwardly. Thus, for each incremental movement of the seat **14** downwardly, there is a greater movement of the edge **61** on the part **62** toward the fulcrum location **66** for the leaf spring **19** than occurs with the design in FIGS. **3** and **4**.

In FIG. **7**, a modified form of chair is shown at **10'**, with elements corresponding to those in FIGS. **3** and **4** identified with like reference numerals and a "'" designation.

The chair **10'** has a back rest component **58'** that acts against a leaf spring **19'** that is anchored in a component **36'**.

In this embodiment, the leaf spring body **46'** is mounted at a slight angle α to vertical. Accordingly, the part **62'** of the component **58'** tends to bind more with the leaf spring **19'** as it slides downwardly thereagainst under increasing user weight. This binding creates frictional forces that augment the upward balancing force produced by the spring **33'**.

Additionally, the chair **10'** utilizes cooperating toothed elements **86**, **88**, **90** that interact to cause movement of the frame part **40'**, arm **70'** and leg **38'** relative to each other and the frame part **40'** that replicates the relative movement that occurs with corresponding elements in the embodiment shown in FIGS. **3** and **4**. The toothed element **88** is in the form of a differential pinion that turns around an axis **92**. Larger and smaller diameter toothed portions **94**, **96**, respectively, engage toothed racks **98**, **100**, respectively on the leg **38'** and arm **70'**. Turning of the toothed element **88** in the direction of the arrow **102** under increasing user weight causes simultaneous upward movement of the member **36'** and downward movement of the support **28'**.

In FIG. **8**, a further modified form of chair, according to the present invention, is shown at **10"**. The chair **10"** incorporates a back rest component **58"** that interacts with a leaf spring **19"** and leg **42"** in the same way that the corresponding components interact on the chair **10** in FIGS. **3** and **4**.

Further, the chair **10"** incorporates toothed elements **86"**, **88"**, **90"** which function essentially in the same manner as the corresponding components on the chair **10'** in FIG. **7**. The primary difference between these embodiments is that the leg **38"** has a curved shape that moves in a complementarily-curved channel **104** on the frame part **40"**. Whereas the support **28'** associated with the seat **14** and member **36'** move relative to each other in parallel, straight paths, the member **36"** moves in a curved path, as dictated by the curvature of the leg **38"** and cooperating channel **104**. This curvature nominally matches the curved shape of the leaf spring **19"** which is pre-loaded from the dotted line position to the operative, solid line position in FIG. **8**. Accordingly, the relative movement of the member **36"** and support **28"** causes the part **62"** that engages the leaf spring **19"** to generally follow the pre-loaded curvature of the leaf spring **19"**.

In a further modified form of chair, as shown at **10'''** in FIG. **9**, the basic construction of FIGS. **3** and **7** is utilized with the exception that the leaf spring **19'''** is fixedly mounted to the component **58'''** and acts against the member **36'''**, i.e., this component arrangement is reversed from that in the earlier embodiments. The leaf spring **19'''** is preloaded from the dotted line position into the solid line position which is maintained by the abutment thereof to the member **36'''**.

In FIGS. **10** and **11**, a further modified form of chair, according to the invention, is shown at $\mathbf{10}^{4'}$. In this embodiment, multiple leaf springs $\mathbf{19}a^{4'}$, $\mathbf{19}b^{4'}$, $\mathbf{19}c^{4'}$, $\mathbf{19}d^{4'}$ are utilized, each with an end anchored in a block **105**.

In this embodiment, the post $\mathbf{30}^{4'}$ has a toothed rack $\mathbf{100}^{4'}$ that cooperates with a toothed, differential pinion element $\mathbf{88}^{4'}$, that cooperates in turn with a toothed rack $\mathbf{98}^{4'}$ making up part of a toothed element $\mathbf{86}^{4'}$ on a member $\mathbf{36}^{4'}$.

Downward movement of the post $\mathbf{30}^{4'}$ under the weight applied to the seat **14** causes the toothed rack $\mathbf{100}^{4'}$ and toothed element $\mathbf{88}^{4'}$, and separately the toothed elements $\mathbf{88}^{4'}$, $\mathbf{86}^{4'}$, to interact to translate the member $\mathbf{36}^{4'}$ in the direction of the arrow **106**.

As the weight on the seat **14** is increased, the member $\mathbf{36}^{4'}$ will move continuously in the direction of the arrow, **106** to successively engage free ends of angled extensions **108***a*, **108***b*, **108***c* at the ends of leaf springs $\mathbf{19}a^{4'}$, $\mathbf{19}b^{4'}$, $\mathbf{19}c^{4'}$, successively. The extensions **108***a*, **108***b*, **108***c* and one surface **110** on the leaf spring $\mathbf{19}d^{4'}$ reside in a reference plane P. As user applied weight increases, a surface **112** on the member $\mathbf{36}^{4'}$ moves along this plane P to successively engage the extensions **108***a*, **108***b*, **108***c* and eventually the surface **110**, whereby the surface **112** defines separate fulcrum locations, corresponding to the fulcrum location **66**,

for the free ends of the leaf springs **19**$a^{4'}$, **19**$b^{4'}$, **19**$c^{4'}$, **19**$d^{4'}$. In other words, the leaf springs **19**$a^{4'}$, **19**$b^{4'}$, **19**$c^{4'}$, **19**$d^{4'}$ are successively operatively engaged under increasing user weight. As a result, the resistance force to the applied leaning force on the back rest **18** in the direction of the arrow **114** is generated by some or all of the leaf springs **19**$a^{4'}$, **19**$b^{4'}$, **19**$c^{4'}$, **19**$d^{4'}$ as they are borne against the surface **112** under the user leaning force.

It is important to point out that the rack and pinion components are not restricted to any specific orientation. The cooperating rack and pinion components may be oriented in virtually any orientation that can be adapted to cause movement of the associated parts in the same manner.

Further, one or all of the leaf springs **19**$a^{4'}$, **19**$b^{4'}$, **19**$c^{4'}$, **19**$d^{4'}$ could be pre-loaded or in curved tracks.

In an alternative form of the basic structure in FIGS. **10** and **11**, as shown for the chair **10**$^{5'}$ in FIGS. **12** and **13**, the member **36**$^{5'}$ vertically advanced, or advanced in another direction, is caused to interact with some, or all, of a plurality, and in this case three, leaf springs **19**$a^{5'}$, **19**$b^{5'}$, **19**$c^{5'}$, which are arranged to be substantially coplanar, as opposed to stacked as the leaf springs **19**$a^{4'}$, **19**$b^{4'}$, **19**$c^{4'}$, **19**$d^{4'}$ are on the chair **10**$^{4'}$.

Under an increasing user weight on the seat **14**, a surface **112**$^{5'}$ on the member **36**$^{5'}$ engages successively against surfaces **116**$a^{5'}$, **116**$b^{5'}$, **116**$c^{5'}$. As shown in FIG. **12**, the particular exemplary weight causes engagement of the surface **112**$^{5'}$ with only two of the leaf springs **19**$a^{5'}$, **19**$b^{5'}$.

The leaning force on the back rest **18** is applied on an actuator **118** in a direction into the page, as indicated by the "X" at **120**. Resistance to the leaning force is generated in the same manner for the chair **10**$^{5'}$ as for the chair **10**$^{4'}$ but with the different arrangement of leaf springs.

In an alternative form, each of the leaf springs in FIGS. **12** and **13** might be substituted for by coil springs, compression/tension springs, or a torsion rod of the type described in an additional embodiment below. One or more springs might be utilized. More springs allow for finer control. Each spring can be individually tuned.

In FIG. **14**, a further modified form of chair, according to the invention, is shown at **10**$^{6'}$. A post **30**$^{6'}$ has a toothed rack **100**$^{6'}$ that cooperates with a differential pinion/toothed element **88**$^{6'}$. The toothed element **88**$^{6'}$ moves together with a component **58**$^{6'}$ that is part of the back rest **16** or otherwise moves in response to movement thereof. The component **58**$^{6'}$ is mounted for pivoting movement relative to a frame part **122** around an axis **124** as the post **30**$^{6'}$ raises and lowers as different weight forces are applied to and removed from the seat **14**.

The leaning force on the back rest **16** is applied to an arm **126** on the component **58**$^{6'}$ in the direction of the arrow **128**.

The frame part **122** has a "U" shape with spaced legs **130**, **132**. The component **58**$^{6'}$ is mounted on the leg **130**.

The toothed element **88**$^{6'}$ cooperates with a separate toothed element **134** that moves guidingly in a channel **136** on the component **58**$^{6'}$. In this embodiment, the toothed element **134** and cooperating channel **136** have a curved shape so that the toothed element **134** is movable guidingly in an arcuate path. A row of teeth **138** on one side of the toothed element **134** engage teeth **140** on the toothed element **88**$^{6'}$ so that the toothed element **134** moves back and forth within the channel **136** as the toothed element **88**$^{6'}$ is rotated in opposite directions around its axis **124**.

The adjusting assembly **18**$^{6'}$ in this embodiment consists of an elongate spring assembly **19**$^{6'}$, in this particular embodiment shown as a coil spring under tension. The spring **19**$^{6'}$ is connected between an end location at **144** on the toothed element **134** and the leg **132** on the frame part **122**.

As a user sits on the seat **14**, without leaning against the back rest **16**, the post **30**$^{6'}$ moves against the force of the spring **33**$^{6'}$ downwardly, thereby turning the toothed element **88**$^{6'}$ in the direction of the arrow **146**, which causes the toothed element **134** to move in the direction of the arrow **148** in the channel **136**. The precise position of the toothed element **134** in the channel **136** is dictated by the weight of the user.

Once the user is seated and leans back against the back rest **16**, separate teeth **150**, **152**, on the toothed element **134** and component **58**$^{6'}$, within the channel **136**, engage, thereby to fix the position of the toothed element **134** within the channel **136**.

Under an applied leaning force in the direction of the arrow **128** on the arm **126**, the component **58**$^{6'}$, and the associated back rest **16**, tend to pivot around the axis **124**, which is resisted by the force in the spring **142**. Because the distance between the axis **124** and end location **144** where the resistant spring force is applied is increased with increasing weight of a user, the resistant force generated by the coil spring **19**$^{6'}$ is likewise increased.

The chair **10**$^{7'}$ in FIG. **15** operates on the same basic principles as the chair **10**$^{6'}$ in FIG. **14**.

More particularly, a toothed element **134**$^{7'}$ moves in a channel **136**$^{7'}$ having an arcuate shape. A coil spring **19**$^{7'}$ connects between the toothed element **134**$^{7'}$ and a leg **132**$^{7'}$ on a U-shaped frame part **122**$^{7'}$.

The primary difference between the structure in FIG. **15**, compared to that in FIG. **14**, is that the toothed element **134**$^{7'}$ is part of, and moves with, an elongate component **154** that is pivoted about an axis **156** that is the approximate location at which the spring **19**$^{7'}$ connects to the leg **132**$^{7'}$. The component **154** has a curved edge **158** with a constant radius R centered on the axis **156**. That edge **158** has teeth **160** which mesh with teeth **162** on a post **30**$^{7'}$ that has a toothed rack **100**$^{6'}$ where the teeth **162** are located.

Increased weight of a user on the seat **14** pivots the component **154** in the direction of the arrow **164** around the axis **156** to move the toothed element **134**$^{7'}$ in the direction of the arrow **166** in the channel **136**$^{7'}$. In so doing, the distance between the spring mount location at **144**$^{7'}$ on the toothed element **134**$^{7'}$ and the pivot axis **124**$^{7'}$ for the component **58**$^{7'}$ increases, thereby to cause an increase in the resistance to tilting of the back rest **16** in the same manner as occurs with the chair **10**$^{6'}$.

In FIG. **16**, a further modified form of chair is shown at **10**$^{8'}$ wherein the spring assembly **19**$^{8'}$ includes an elongate torsion component **168** with a lengthwise axis **170**. The adjusting assembly **18**$^{8'}$ further includes an actuating component **172** that has a portion **174** keyed to the periphery of the torsion component **168** to move slidingly axially thereallong in the same angular orientation. With the torsion component **168** fixed in relationship to the frame **12**$^{8'}$, a user's weight on the seat **14** causes movement of the actuating component **172** through cooperation between a toothed rack **176** thereon and intermediate input structure **178** of suitable construction. Increased weight on the seat **14** causes the actuating component **172** to shift closer to a base **180** of the torsion component **168** closer to where it is anchored to the frame **12**$^{8'}$.

A leaning force on the back rest **16** is applied to the torsion component generally in the direction of the arrow **182**, tending to turn the torsion component **168** around the axis **170**. For the back rest **16** to reposition, the torsion compo-

nent **168** must be twisted around the axis **170**. This twisting action is resisted to a greater degree with the actuating component **172** closer to the base **180** under a heavier user weight.

On the other hand, with the actuating component **172** shifted towards its free end **184**, as occurs with a lighter user, the torsion component **168** can be more readily twisted about its length and the axis **170**.

In FIG. **17**, a still further modified form of chair, according to the invention, is shown at **10**$^{9'}$ with an adjusting assembly **18**$^{9'}$ cooperating between a seat **14** and back rest **16**. A spring assembly **19**$^{9'}$ is mounted to a frame **12**$^{9'}$ and consists of separate leaf springs with bodies **46**$^{9'}$ each with spaced ends supported by blocks **186**, **188** on the frame **12**$^{9'}$. With this arrangement, the bodies **46**$^{9'}$ and blocks **186**, **188** cooperatively extend around an opening **190** with a width W.

An elongate, wedge-shaped actuating component **192** with a uniform width W**1**, slightly less than the width W, extends through the opening **190**.

A toothed rack **194** is provided on the actuating component **192** and moves therewith. In response to a weight force being applied to the seat **14**, and through an appropriate force transfer structure **196**, the toothed rack **194** and actuating component **192** are shifted in the direction of the arrow **198**.

By reason of the wedge shape, the actuating component **192** has oppositely facing actuating surfaces S**1**, S**2**, each with one dimension D**1** at one end and a larger dimension D**2** at its opposite end, that abut to, or reside adjacent to, facing surfaces S**3**, **84**, respectively, on the bodies **46**$^{9'}$. As the actuating component **192** shifts in the direction of the arrow **198**, a progressively larger area of the surfaces S**1**, S**2** confronts the leaf spring bodies **46**$^{9'}$.

The back rest **16** imparts a force to the actuating component **192** through a suitable force transfer structure at **202** tending to turn the actuating component **192** around an axis **204**.

Accordingly, a user leaning force generates a force on the actuating component **192** that bears the surfaces S**1**, S**2** simultaneously against the surfaces S**3**, S**4** of the leaf spring bodies **46**$^{9'}$ between the spaced supported ends. The larger the area of the surfaces S**1**, S**2** in contact with the bodies **46**$^{9'}$, the more resistant the bodies **46**$^{9'}$ are to deformation. This translates into a greater resistance to the repositioning of the back rest **16** for a larger weight application on the seat **14**.

Further, as the actuating component **192** turns around the axis **204**, the force transfer between the actuating component **192** and bodies **46**$^{9'}$ occurs primarily at corners C**1**, C**2**, C**3**, C**4** of the actuating component **192**, which bear against reinforced and thus more rigid parts of the bodies **46**$^{9'}$ adjacent to the blocks **186**, **188** as more user weight is applied. Thus, greater resistance to back rest movement results.

In a still further alternative form, as shown in FIG. **18**, multiple adjusting assemblies **18** are utilized between a cooperating first component(s)/seat **14** and second component(s)/back rest **16** on a frame **12**.

Ideally, the apparatus/chair **10** will adapt to users weighing as much as 350 pounds, or more. While one spring assembly might be designed for a total desired weight range to be accommodated, two or more spring assemblies might be utilized and their function and operation coordinated.

Further, different spring assemblies might be utilized with coordinated operation. For example, one spring assembly may cover a range of 30-175 pounds with a second spring assembly operational for user weights in the range of 175-350 pounds. More springs/spring assemblies might be added to further split up the weight ranges.

The spring assemblies may be designed in relationship to seat movement. For example, one spring assembly may be operational for 0-0.5" of seat movement with a separate spring assembly operational for seat movement of 0.5"-1", where 1" is the seat movement for the maximum weight for which the apparatus is designed.

The examples herein of spring assembly/spring construction should not be viewed as limiting. Different spring types and combinations are contemplated. For example, the springs may be curved, coiled with different turn diameter and rise, hybrid shapes, concentric arrangements, etc. Coil springs, or the like, may produce forces under either compression or tension.

The foregoing disclosure of specific embodiments is intended to be illustrative of the broad concepts comprehended by the invention.

The invention claimed is:

1. A reconfigurable apparatus for supporting at least part of a user's weight with the user in an operative position with respect to the reconfigurable apparatus, the reconfigurable apparatus comprising:

a frame;

a first component on the frame upon which a force is applied by a user in a first manner as an incident of the user assuming the operative position;

at least a second component on the frame that is movable relative to the first component and upon which a force can be applied by a user in the operative position in a second manner to reconfigure the apparatus by moving the at least second component relative to the first component; and

an adjusting assembly cooperating between the first component and the at least second component and configured so that as an incident of the force being applied in the first manner changing in magnitude, the force required to be applied in the second manner to reconfigure the apparatus and move the second component relative to the first component changes in magnitude.

2. The reconfigurable apparatus according to claim **1** wherein the second component is guided in pivoting movement relative to the first component around an axis.

3. The reconfigurable apparatus according to claim **1** wherein the reconfigurable apparatus is a piece of furniture.

4. The reconfigurable apparatus according to claim **3** wherein the reconfigurable apparatus is a chair in which a user in the operative position is seated, with the first component comprising a seat upon which a user applies the force in the first manner by sitting in the chair.

5. The reconfigurable apparatus according to claim **4** wherein the at least second component comprises a back rest against which a user seated in the chair leans to exert the force in the second manner to reconfigure the chair.

6. The reconfigurable apparatus according to claim **5** wherein the adjusting assembly comprises a spring assembly that is configured to exert a force that resists movement of the at least second component relative to the first component and that varies as the magnitude of the force applied in the first manner varies.

7. The reconfigurable apparatus according to claim **6** wherein the spring assembly comprises a leaf spring with a length that is bendable about a fulcrum location and the adjusting assembly and at least second component are configured so that as the force applied in the first manner changes in magnitude an effective length of the leaf spring changes.

8. The reconfigurable apparatus according to claim **1** wherein the adjusting assembly is configured so that an increase in magnitude of the force applied in the first manner causes an increase in magnitude of the force applied in the second manner required to reconfigure the apparatus.

9. The reconfigurable apparatus according to claim **7** wherein the leaf spring has a cross-sectional shape as viewed orthogonally to its length that is non-uniform over at least a portion of the length of the leaf spring.

10. The reconfigurable apparatus according to claim **6** wherein the spring assembly comprises a plurality of leaf springs each with a length that bends around a fulcrum location.

11. The reconfigurable apparatus according to claim **10** wherein the adjusting assembly and at least second component are configured so that a different number of said plurality of leaf springs exerts a force that resists movement of the at least second component based upon a magnitude of the force applied in the first manner.

12. The reconfigurable apparatus according to claim **6** wherein the spring assembly comprises an elongate spring component with a length that exerts the force that resists movement of the at least second component in line with the length of the spring.

13. The reconfigurable apparatus according to claim **12** wherein the second component is guided in pivoting movement relative to the at least first component and/or the frame around an axis and the second component and adjusting assembly are configured so that the elongate spring component exerts the force that resists movement of the at least second component at a distance from the axis that changes as a magnitude of the force applied in the first manner changes.

14. The reconfigurable apparatus according to claim **6** wherein the spring assembly comprises at least one leaf spring.

15. The reconfigurable apparatus according to claim **14** wherein the at least one leaf spring has a length and spaced supported ends and the apparatus further comprises an actuating component that is configured to bear against the one leaf spring between the spaced supported ends to resist movement of the at least second component as the force is applied in the second manner with a magnitude that reconfigures the apparatus.

16. The reconfigurable apparatus according to claim **6** wherein the spring assembly comprises a torsion component with an axis and the apparatus further comprises an actuating component that is configured to turn the torsion component around the axis to generate the force that resists movement of the at least second component as the force is applied in the first manner with a magnitude that reconfigures the apparatus.

17. The reconfigurable apparatus according to claim **16** wherein the actuating component and torsion component are configured so that the actuating component engages the torsion component at different locations along the axis of the torsion component as a magnitude of the force applied in the first manner changes.

18. The reconfigurable apparatus according to claim **1** wherein the adjusting assembly comprises cooperating toothed elements that move relative to each other as a magnitude of the force applied in the first manner reaches a predetermined level.

19. The reconfigurable apparatus according to claim **4** wherein the seat is configured to move vertically relative to the frame with the first force applied in the first manner with a magnitude that reaches a predetermined level.

20. The reconfigurable apparatus according to claim **1** wherein the apparatus further comprises a supporting biasing assembly that normally biasably urges the seat upwardly relative to the frame.

21. The reconfigurable apparatus according to claim **2** wherein the axis is spaced from the first component.

22. The reconfigurable apparatus according to claim **5** wherein the back rest is spaced from the seat.

* * * * *