PTO/AIA/15 (03-13)
Approved for use through 01/31/2014. OMB 0651-0032
U.S. Patent and Trademark Office; U.S. DEPARTMENT OF COMMERCE
Under the Paperwork Reduction Act of 1995 no persons are required to respond to a collection of information unless it displays a valid OMB control number

UTILITY PATENT APPLICATION TRANSMITTAL

(Only for new nonprovisional applications under 37 CFR 1.53(b))

Attorney Docket No.	DEJ10730P00071US
First Named Inventor	Aaron DeJule
Title	APPARATUS WITH WEIGHT RESPONSIVE...
Express Mail Label No.	

APPLICATION ELEMENTS

See MPEP chapter 600 concerning utility patent application contents.

ADDRESS TO: **Commissioner for Patents**
P.O. Box 1450
Alexandria, VA 22313-1450

1. [✓] **Fee Transmittal Form** (PTO/SB/17 or equivalent)
2. [✓] **Applicant asserts small entity status.** See 37 CFR 1.27
3. [ ] **Applicant certifies micro entity status.** See 37 CFR 1.29. Applicant must attach form PTO/SB/15A or B or equivalent.
4. [✓] **Specification** [*Total Pages* 32] Both the claims and abstract must start on a new page. *(See MPEP § 608.01(a) for information on the preferred arrangement)*
5. [✓] **Drawing(s)** (35 U.S.C. 113) [*Total Sheets* 6]
6. **Inventor's Oath or Declaration** [*Total Pages* ____] *(including substitute statements under 37 CFR 1.64 and assignments serving as an oath or declaration under 37 CFR 1.63(e))*
   a. [ ] Newly executed (original or copy)
   b. [ ] A copy from a prior application (37 CFR 1.63(d))
7. [✓] **Application Data Sheet** ** See note below.* See 37 CFR 1.76 (PTO/AIA/14 or equivalent)
8. **CD-ROM or CD-R** in duplicate, large table, or Computer Program (*Appendix*)
   [ ] Landscape Table on CD
9. **Nucleotide and/or Amino Acid Sequence Submission** (*if applicable, items a. – c. are required*)
   a. [ ] Computer Readable Form (CRF)
   b. [ ] Specification Sequence Listing on:
      i. [ ] CD-ROM or CD-R (2 copies); or
      ii. [ ] Paper
   c. [ ] Statements verifying identity of above copies

ACCOMPANYING APPLICATION PAPERS

10. [ ] **Assignment Papers** (cover sheet & document(s))
    Name of Assignee ____
11. [ ] **37 CFR 3.73(c) Statement** (*when there is an assignee*) [ ] **Power of Attorney**
12. [ ] **English Translation Document** (*if applicable*)
13. [ ] **Information Disclosure Statement** (PTO/SB/08 or PTO-1449)
    [ ] Copies of citations attached
14. [ ] **Preliminary Amendment**
15. [ ] **Return Receipt Postcard** (*MPEP § 503*) (*Should be specifically itemized*)
16. [ ] **Certified Copy of Priority Document(s)** (*if foreign priority is claimed*)
17. [ ] **Nonpublication Request** Under 35 U.S.C. 122(b)(2)(B)(i). Applicant must attach form PTO/SB/35 or equivalent.
18. [ ] **Other:** ____

***Note:** (1) Benefit claims under 37 CFR 1.78 and foreign priority claims under 1.55 **must** be included in an Application Data Sheet (ADS).
(2) For applications filed under 35 U.S.C. 111, the application must contain an ADS specifying the applicant if the applicant is an assignee, person to whom the inventor is under an obligation to assign, or person who otherwise shows sufficient proprietary interest in the matter. See 37 CFR 1.46(b).

19. CORRESPONDENCE ADDRESS

[✓] The address associated with Customer Number: 32116 **OR** [ ] Correspondence address below

Name	WOOD, PHILLIPS, KATZ, CLARK & MORTIMER				
Address	500 W. Madison Street, Suite 1130				
City	Chicago	State	IL	Zip Code	60661-2562
Country	US	Telephone	312-876-1800	Email	docketing@woodphillips.com

Signature		Date	2/10/11
Name (Print/Type)	John S. Mortimer	Registration No. (Attorney/Agent)	30,407

This collection of information is required by 37 CFR 1.53(b). The information is required to obtain or retain a benefit by the public which is to file (and by the USPTO to process) an application. Confidentiality is governed by 35 U.S.C. 122 and 37 CFR 1.11 and 1.14. This collection is estimated to take 12 minutes to complete, including gathering, preparing, and submitting the completed application form to the USPTO. Time will vary depending upon the individual case. Any comments on the amount of time you require to complete this form and/or suggestions for reducing this burden, should be sent to the Chief Information Officer, U.S. Patent and Trademark Office, U.S. Department of Commerce, P.O. Box 1450, Alexandria, VA 22313-1450. DO NOT SEND FEES OR COMPLETED FORMS TO THIS ADDRESS. **SEND TO: Commissioner for Patents, P.O. Box 1450, Alexandria, VA 22313-1450.**
If you need assistance in completing the form, call 1-800-PTO-9199 and select option 2.

MillerKnoll, Ex. 1004

PTO/SB/17 (03-13)
Approved for use through 01/31/2014. OMB 0651-0032
U.S. Patent and Trademark Office; U.S. DEPARTMENT OF COMMERCE
Under the Paperwork Reduction Act of 1995 no persons are required to respond to a collection of information unless it displays a valid OMB control number

FEE TRANSMITTAL

Complete if known	
Application Number	Unassigned
Filing Date	Herewith
First Named Inventor	Aaron DeJule
Examiner Name	
Art Unit	
Practitioner Docket No.	DEJ10730P00071US

[✓] Applicant asserts small entity status. See 37 CFR 1.27.

[ ] Applicant certifies micro entity status. See 37 CFR 1.29. Form PTO/SB/15A or B or equivalent must either be enclosed or have been submitted previously.

TOTAL AMOUNT OF PAYMENT ($) 800.00

METHOD OF PAYMENT (check all that apply)

[ ] Check [ ] Credit Card [✓] Money Order [ ] None [ ] Other (please identify): _____

[✓] Deposit Account Deposit Account Number: 23-0785 Deposit Account Name: Wood Phillips

For the above-identified deposit account, the Director is hereby authorized to (check all that apply):

[ ] Charge fee(s) indicated below [ ] Charge fee(s) indicated below, **except for the filing fee**

[✓] Charge any additional fee(s) or underpayment of fee(s) under 37 CFR 1.16 and 1.17 [✓] Credit any overpayment of fee(s)

WARNING: Information on this form may become public. Credit card information should not be included on this form. Provide credit card information and authorization on PTO-2038.

FEE CALCULATION

1. BASIC FILING, SEARCH, AND EXAMINATION FEES (U = undiscounted fee; S = small entity fee; M = micro entity fee)

	FILING FEES			SEARCH FEES			EXAMINATION FEES			
Application Type	**U ($)**	**S ($)**	**M ($)**	**U ($)**	**S ($)**	**M ($)**	**U ($)**	**S ($)**	**M ($)**	**Fees Paid ($)**
Utility	280	140*	70	600	300	150	720	360	180	730.00
Design	180	90	45	120	60	30	460	230	115	
Plant	180	90	45	380	190	95	580	290	145	
Reissue	280	140	70	600	300	150	2,160	1,080	540	
Provisional	260	130	65	0	0	0	0	0	0	

* The $140 small entity status filing fee for a utility application is further reduced to $70 for a small entity status applicant who files the application via EFS-Web.

2. EXCESS CLAIM FEES

Fee Description	Undiscounted Fee ($)	Small Entity Fee ($)	Micro Entity Fee ($)
Each claim over 20 (including Reissues)	80	40	20
Each independent claim over 3 (including Reissues)	420	210	105
Multiple dependent claims	780	390	195

Total Claims 20 -20 or HP = **Extra Claims** 0 x **Fee ($)** _____ = **Fee Paid ($)** _____

HP = highest number of total claims paid for, if greater than 20.

Multiple Dependent Claims **Fee ($)** _____ **Fee Paid ($)** _____

Indep. Claims 1 -3 or HP = **Extra Claims** 0 x **Fee ($)** _____ = **Fee Paid ($)** _____

HP = highest number of independent claims paid for, if greater than 3.

3. APPLICATION SIZE FEE

If the specification and drawings exceed 100 sheets of paper (excluding electronically filed sequence or computer listings under 37 CFR 1.52(e)), the application size fee due is $400 ($200 for small entity) ($100 for micro entity) for each additional 50 sheets or fraction thereof. See 35 U.S.C. 41(a)(1)(G) and 37 CFR 1.16(s).

Total Sheets _____ - 100 = **Extra Sheets** _____ / 50 = **Number of each additional 50 or fraction thereof** _____ (round **up** to a whole number) x **Fee ($)** _____ = **Fee Paid ($)** _____

4. OTHER FEE(S) **Fees Paid ($)**

Non-English specification, $130 fee (no small or micro entity discount) _____

Non-electronic filing fee under 37 CFR 1.16(t) for a utility application, $400 fee ($200 small or micro entity) _____

Other (e.g., late filing surcharge): Declaration 70.00

SUBMITTED BY			
Signature		Registration No. (Attorney/Agent) 30,407	Telephone 312-876-1800
Name (Print/Type)	John S. Mortimer		Date 2/10/16

This collection of information is required by 37 CFR 1.136. The information is required to obtain or retain a benefit by the public which is to file (and by the USPTO to process) an application. Confidentiality is governed by 35 U.S.C. 122 and 37 CFR 1.14. This collection is estimated to take 30 minutes to complete, including gathering, preparing, and submitting the completed application form to the USPTO. Time will vary depending upon the individual case. Any comments on the amount of time you require to complete this form and/or suggestions for reducing this burden, should be sent to the Chief Information Officer, U.S. Patent and Trademark Office, U.S. Department of Commerce, P.O. Box 1450, Alexandria, VA 22313-1450. DO NOT SEND FEES OR COMPLETED FORMS TO THIS ADDRESS. **SEND TO: Commissioner for Patents, P.O. Box 1450, Alexandria, VA 22313-1450.**

If you need assistance in completing the form, call 1-800-PTO-9199 and select option 2.

PTO/SB/17 (03-13)
Approved for use through 01/31/2014. OMB 0651-0032
U.S. Patent and Trademark Office; U.S. DEPARTMENT OF COMMERCE
Under the Paperwork Reduction Act of 1995 no persons are required to respond to a collection of information unless it displays a valid OMB control number

FEE TRANSMITTAL

Complete if known	
Application Number	Unassigned
Filing Date	Herewith
First Named Inventor	Aaron DeJule
Examiner Name	
Art Unit	
Practitioner Docket No.	DEJ10730P00071US

[✓] Applicant asserts small entity status. See 37 CFR 1.27.

[ ] Applicant certifies micro entity status. See 37 CFR 1.29. Form PTO/SB/15A or B or equivalent must either be enclosed or have been submitted previously.

TOTAL AMOUNT OF PAYMENT ($) 800.00

METHOD OF PAYMENT (check all that apply)

[ ] Check [ ] Credit Card [✓] Money Order [ ] None [ ] Other (please identify): _____

[✓] Deposit Account Deposit Account Number: 23-0785 Deposit Account Name: Wood Phillips

For the above-identified deposit account, the Director is hereby authorized to (check all that apply):

[ ] Charge fee(s) indicated below [ ] Charge fee(s) indicated below, **except for the filing fee**

[✓] Charge any additional fee(s) or underpayment of fee(s) under 37 CFR 1.16 and 1.17 [✓] Credit any overpayment of fee(s)

WARNING: Information on this form may become public. Credit card information should not be included on this form. Provide credit card information and authorization on PTO-2038.

FEE CALCULATION

1. BASIC FILING, SEARCH, AND EXAMINATION FEES (U = undiscounted fee; S = small entity fee; M = micro entity fee)

	FILING FEES			SEARCH FEES			EXAMINATION FEES			
Application Type	**U ($)**	**S ($)**	**M ($)**	**U ($)**	**S ($)**	**M ($)**	**U ($)**	**S ($)**	**M ($)**	**Fees Paid ($)**
Utility	280	140*	70	600	300	150	720	360	180	730.00
Design	180	90	45	120	60	30	460	230	115	
Plant	180	90	45	380	190	95	580	290	145	
Reissue	280	140	70	600	300	150	2,160	1,080	540	
Provisional	260	130	65	0	0	0	0	0	0	

* The $140 small entity status filing fee for a utility application is further reduced to $70 for a small entity status applicant who files the application via EFS-Web.

2. EXCESS CLAIM FEES

Fee Description	Undiscounted Fee ($)	Small Entity Fee ($)	Micro Entity Fee ($)
Each claim over 20 (including Reissues)	80	40	20
Each independent claim over 3 (including Reissues)	420	210	105
Multiple dependent claims	780	390	195

Total Claims 20 -20 or HP = **Extra Claims** 0 x **Fee ($)** _____ = **Fee Paid ($)** _____

HP = highest number of total claims paid for, if greater than 20.

Multiple Dependent Claims **Fee ($)** _____ **Fee Paid ($)** _____

Indep. Claims 1 -3 or HP = **Extra Claims** 0 x **Fee ($)** _____ = **Fee Paid ($)** _____

HP = highest number of independent claims paid for, if greater than 3.

3. APPLICATION SIZE FEE

If the specification and drawings exceed 100 sheets of paper (excluding electronically filed sequence or computer listings under 37 CFR 1.52(e)), the application size fee due is $400 ($200 for small entity) ($100 for micro entity) for each additional 50 sheets or fraction thereof. See 35 U.S.C. 41(a)(1)(G) and 37 CFR 1.16(s).

Total Sheets _____ - 100 = **Extra Sheets** _____ / 50 = **Number of each additional 50 or fraction thereof** _____ (round **up** to a whole number) x **Fee ($)** _____ = **Fee Paid ($)** _____

4. OTHER FEE(S) **Fees Paid ($)**

Non-English specification, $130 fee (no small or micro entity discount) _____

Non-electronic filing fee under 37 CFR 1.16(t) for a utility application, $400 fee ($200 small or micro entity) _____

Other (e.g., late filing surcharge): Declaration 70.00

SUBMITTED BY			
Signature		Registration No. (Attorney/Agent) 30,407	Telephone 312-876-1800
Name (Print/Type)	John S. Mortimer		Date 2/10/16

This collection of information is required by 37 CFR 1.136. The information is required to obtain or retain a benefit by the public which is to file (and by the USPTO to process) an application. Confidentiality is governed by 35 U.S.C. 122 and 37 CFR 1.14. This collection is estimated to take 30 minutes to complete, including gathering, preparing, and submitting the completed application form to the USPTO. Time will vary depending upon the individual case. Any comments on the amount of time you require to complete this form and/or suggestions for reducing this burden, should be sent to the Chief Information Officer, U.S. Patent and Trademark Office, U.S. Department of Commerce, P.O. Box 1450, Alexandria, VA 22313-1450. DO NOT SEND FEES OR COMPLETED FORMS TO THIS ADDRESS. **SEND TO: Commissioner for Patents, P.O. Box 1450, Alexandria, VA 22313-1450.**

If you need assistance in completing the form, call 1-800-PTO-9199 and select option 2.

APPARATUS WITH WEIGHT RESPONSIVE CHANGEABLE ADJUSTING CHARACTERISTICS

BACKGROUND OF THE INVENTION

FIELD OF THE INVENTION

[0001] This invention relates to apparatus upon which variable weight is applied during normal use and, more particularly, to an apparatus having at least one part with different adjusting characteristics during normal use depending upon the particular applied weight.

BACKGROUND ART

[0002] A very significant percentage of furniture sold commercially has an ability to be adjusted/reconfigured to accommodate users with different body types and demands. As one example, task chairs are routinely engineered so that a single design can be offered with a substantial amount of versatility in terms of how it can be adapted to size and weight of different individuals so as to optimize function and comfort level.

[0003] In a typical task chair construction, a wheeled frame supports a vertically adjustable seat. A back rest is integrated into the frame and/or seat so that it can be tilted or reclined to accommodate a user's normal movements and/or to allow inclined back positions to be comfortably maintained by the user's upper torso weight as he/she is sitting. The task

chairs may be made with or without armrests. When utilized, armrests are commonly made to be at least vertically adjustable to allow comfortable support for a user that may be different depending upon the particular user's build and/or the task(s) to be performed using the chair.

[0004] Reconfigurable designs are also commonly incorporated into seating used for leisure activities. Reading chairs and sectional pieces on modular furniture commonly have such an adjusting capability.

[0005] With a single design, performance of a particular seating apparatus will be different depending upon the weight of a user. For example, a heavier individual may be able to comfortably urge a back rest towards an inclined position and comfortably maintain potentially a number of different, desired, inclined positions within a range. On the other hand, a lighter individual with the same design may have to engage in a more unnatural movement and constantly exert a pressure on the seat back to prevent it from returning to its normal upright position, generally maintained through some sort of biasing mechanism.

[0006] Similar tilt features may be integrated into the seat itself with a user's weight affecting how the mechanisms will operate.

[0007] One industry solution to the above problem is to provide manual adjusting capabilities whereby biasing forces on movable components can be changed. For example, a mechanism has been incorporated that allows a user to change a spring force on a back rest to be more compatible with that user's weight.

[0008] Tilt and tension adjustment is typically achieved by rotating a knob or pulling a lever, which loads a spring. Once the chair is optimally adjusted, the user can recline to a comfortable backward distance. However, to optimize balance, the user must iteratively lean back and adjust. This process of adjusting tension and tilt by pulling a lever or turning a knob may require many rotations or pulls depending on the weight of the previous user, resulting in potentially wasted time and imperfect adjustments.

[0009] With the multitude of different manual adjusting capabilities currently in existing furniture designs, user operation is becoming more complicated. Even a basic task chair often has multiple actuators which a user is required to manually operate to customize a chair for his/her purposes. Oftentimes, such mechanisms are confusing to users who may default to simply using a chair in its current configuration, even if not optimally configured. This problem is aggravated when persons routinely move from chair to chair during a typical work day in certain office environments in which there are group meetings, training, collaboration at different locations, sharing of resources such as at computer stations, etc. This same sharing of chairs occurs in classrooms, libraries, open plan offices, etc.

[0010] The current demand for versatility may demand integration of adjusting mechanisms on even base line furniture. To control manufacturing costs, the quality of many of these mechanisms, and potentially the overall chair, may be compromised.

[0011] The challenges of providing customizable adjusting systems, while demonstrated in the chair environment above, is not so limited. Many

different apparatus use adjusting components that rely on a certain balance that may be affected by a variable weight application encountered in normal use. As but one example, desktop mechanisms are now evolving which allow a user to elevate a work surface so that he/she has the option of either sitting or standing while working on a computer or performing other routine work day tasks. Ideally, a user has the ability to raise and lower the work surface in a range, and to maintain a desired position, without having to operate any locking or adjusting mechanisms. Given that different jobs require placement of different items on the work surface, the applied weight on the work surface may vary considerably, which makes a generic design difficult to practically construct.

[0012] These problems are contended with also in different environments and with different types of equipment outside of the furniture arena. In any environment wherein components are adjustable, designers strive to design systems so that they are affordable, reliable, and user friendly. Balancing these often competing objectives remains an ongoing challenge.

SUMMARY OF THE INVENTION

[0013] In one form, the invention is directed to a reconfigurable apparatus having: a frame; at least a first component on the frame upon which a force is applied in a first manner in using the apparatus for its intended purpose; at least a second component on the frame that is movable relative to the at least first component and/or the frame and upon which a

force can be applied in a second manner to reconfigure the apparatus by moving the at least second component relative to the at least first component and/or the frame; and an adjusting assembly cooperating between the at least first component and the at least second component. The adjusting assembly is configured so that as an incident of the force being applied in the first manner changing, the force being applied in the second manner required to reconfigure the apparatus changes.

[0014] In one form, the second component is guided in pivoting movement relative to the at least first component and/or the frame around an axis.

[0015] In one form, the reconfigurable apparatus is a piece of furniture.

[0016] In one form, the reconfigurable apparatus is a chair. The at least first component is in the form of a seat upon which a user applies the force in the first manner by sitting in the chair.

[0017] In one form, the at least second component is in the form of a back rest against which a user seated in the chair leans to exert the force in the second manner to reconfigure the chair.

[0018] In one form, the adjusting assembly includes a spring assembly that is configured to exert a force that resists movement of the at least second component and that varies as a magnitude of the force applied in the first manner varies.

[0019] In one form, the spring assembly has a leaf spring with a length that is bendable about a fulcrum location. The adjusting assembly and at least second component are configured so that as the force applied in the

first manner changes in magnitude, an effective length of the leaf spring changes.

[0020] In one form, the adjusting assembly is configured so that an increase in magnitude of the force applied in the first manner causes an increase in magnitude of the force applied in the second manner required to reconfigure the apparatus.

[0021] In one form, the leaf spring has a cross-sectional shape, as viewed orthogonally to its length, that is non-uniform over at least a portion of the length of the leaf spring.

[0022] In one form, the spring assembly has a plurality of leaf springs each with a length that bends around a fulcrum location.

[0023] In one form, the adjusting assembly and at least second component are configured so that a different number of said plurality of leaf springs exerts a force that resists movement of the at least second component based upon a magnitude of the force applied in the first manner.

[0024] In one form, the spring assembly has an elongate spring component with a length that exerts the force that resists movement of the at least second component in line with the length of the spring.

[0025] In one form, the second component is guided in pivoting movement relative to the at least first component and/or the frame around an axis. The second component and adjusting assembly are configured so that the elongate spring component exerts the force that resists movement of the at least second component at a distance from the axis that changes as a magnitude of the force applied in the first manner changes.

[0026] In one form, the spring assembly has at least one leaf spring.

[0027] In one form, the at least one leaf spring has a length and spaced supported ends. The apparatus further includes an actuating component that is configured to bear against the one leaf spring between the spaced supported ends to resist movement of the at least second component as the force is applied in the second manner with a magnitude that reconfigures the apparatus.

[0028] In one form, the spring assembly has a torsion component with an axis. The apparatus further includes an actuating component that is configured to turn the torsion component around the axis to generate the force that resists movement of the at least second component as the force is applied in the first manner with a magnitude that reconfigures the apparatus.

[0029] In one form, the actuating component and torsion component are configured so that the actuating component engages the torsion component at different locations along the axis of the torsion component as a magnitude of the force applied in the first manner changes.

[0030] In one form, the adjusting assembly has cooperating toothed elements that move relative to each other as a magnitude of the force applied in the first manner reaches a predetermined level.

[0031] In one form, the seat is configured to move vertically relative to the frame with the first force applied in the first manner with a magnitude that reaches a predetermined level.

[0032] In one form, the apparatus further includes a supporting biasing assembly that normally biasably urges the seat upwardly relative to the frame.

BRIEF DESCRIPTION OF THE DRAWINGS

[0033] Fig. 1 is a schematic representation of a reconfigurable apparatus, according to the present invention;

[0034] Fig. 2 is a side elevation view of a task chair, that is one representative form of apparatus as shown in Fig. 1, and incorporating an adjusting assembly according to the present invention;

[0035] Fig. 3 is a partially schematic representation of one specific form of adjusting assembly, integrated into the apparatus in Figs. 1 and 2;

[0036] Fig. 4 is a fragmentary view of a part of the adjusting assembly in Fig. 3, which utilizes a leaf spring, and from a different perspective;

[0037] Fig. 5 is an enlarged, fragmentary view of a modified form of a leaf spring utilized on the apparatus in Figs. 3 and 4;

[0038] Fig. 6 is an enlarged, fragmentary, elevation view of a linkage, modified from a corresponding linkage as used on the apparatus in Figs. 3 and 4;

[0039] Figs. 7-16 are partially schematic representations of apparatus incorporating different forms of adjusting assemblies, according to the invention; and

[0040] Fig. 17 is a schematic representation of a further modified form of reconfigurable apparatus, according to the present invention.

DETAILED DESCRIPTION OF THE PREFERRED EMBODIMENT

[0041] In Fig. 1, a reconfigurable apparatus, according to the present invention, is shown in schematic form at 10. The apparatus 10 consists of a frame 12 and at least a first component 14 on the frame 12 upon which a force is applied in a first manner in using the apparatus 10 for its intended purpose.

[0042] At least a second component 16 is provided on the frame 12 and is movable relative to the at least first component and/or the frame 12. A force can be applied in a second manner upon the at least second component to reconfigure the apparatus 10 by moving the at least second component 16 relative to the at least first component and/or the frame 12.

[0043] An adjusting assembly 18 cooperates between the at least first component 14 and the at least second component 16 and is configured so that, as an incident of the force being applied in the first manner changing, the force applied in the second manner required to reconfigure the apparatus 10 changes.

[0044] The adjusting assembly 18 includes a spring assembly 19. The spring assembly 19 is configured to exert a force that resists movement of the at least second component 16 that varies as a magnitude of the force applied in the first manner varies.

[0045] The generic showing of the apparatus 10 is intended to encompass a wide range of different products and different applications. The inventive concepts can be used in virtually any system or apparatus wherein its normal intended use requires the application of a force on a first component and wherein that force on the first component impacts a force required to be applied to a second component to reconfigure the apparatus as contemplated during use.

[0046] While not intended to be limiting, the detailed description herein will be focused upon furniture and, more particularly, a chair construction. This application of the inventive concepts is intended to be exemplary in nature only and should not be viewed as limiting the inventive concepts to the specific type of apparatus described in detail herein. Further, the schematic showing in Fig. 1 is intended to encompass not only a wide range of different systems/apparatus, but different forms of components and their interaction for each such system/apparatus.

[0047] For example, interlocking toothed components are described, in exemplary forms below. The invention contemplates not only different types of toothed components, such as gears, differential gears, epicyclic gears, rack and pinion arrangements, etc., but also virtually an unlimited number of different interengaging components, such as sprockets and chains, pulleys and cables, mechanisms using levers, pistons, different types of linkages, etc.

[0048] In Fig. 2, one exemplary apparatus 10 is shown in the form of a task chair, in this case without armrests. Of course, armrests might be

incorporated and might also have parts thereof movable in different manners depending upon the weight of the user, as hereinafter explained.

[0049] The chair 10 has a wheeled frame 12 with a vertically extending pedestal assembly 20. The first component 14 is in the form of a conventional- type seat with an upwardly facing user support surface 22. In this case, the aforementioned force applied in the first manner is the weight of the user exerted downwardly on the support surface 22 as he/she sits on the chair 10.

[0050] A corresponding second component 16 is in the form of a back rest against which a seated user leans to exert the aforementioned force in the second manner to reconfigure the chair 10. That is, the back rest moves relative to the frame 12 and first component 14, as the user leans back and forth while seated, generally in a manner as indicated by the double-headed arrow 23.

[0051] The adjusting assembly 18, as shown schematically in Fig. 2, acts between the first component/seat 14 and second component/back rest 16 directly and/or through the frame 12. The adjusting assembly 18 may be added to the frame 12 by attachment thereto, virtually anywhere thereon, or integrated thereinto, as by being constructed within a hollow 24 on the pedestal assembly 20.

[0052] The chair 10 may incorporate one or more adjusting features other than one that permits reconfiguration by changing the angle of the second component/back rest 16. The adjusting assembly 18 may be integrated into the mechanisms associated with these other features.

Alternatively, the other features may operate without effect by the adjusting assembly 18.

[0053] For purposes of simplicity, the second component/back rest 16 will be shown as repositionable relative to the first component/seat 14 to reconfigure the chair 10 by movement of the second component/back rest 16 relative to the first component/seat 14 and frame 12 around a pivot axis 26. This particular connection should not be viewed as limiting.

[0054] Exemplary specific forms of the adjusting assembly 18 will now be described. As noted above, virtually an unlimited number of different variations of adjusting assembly are contemplated within the generic showing of Figs. 1 and 2. These specific forms are exemplary in nature only. These particular mechanisms will also be described with respect to the apparatus in the form of a chair as shown in Fig. 2. Again, the particular nature of the apparatus is not limited to a chair or furniture, although it has particular applicability in this category of product.

[0055] In Figs. 3 and 4, the first component/seat 14 (hereinafter referred to only as the representative chair "seat 14") is integrated into a support 28 that has a depending post 30 that is slidable guidingly vertically, as indicated by the double-headed arrow 32, in a guide channel 34 on the frame 12. A biasing assembly, shown in one exemplary form as a coil spring 33, normally biasably urges the seat 14 upwardly relative to the frame 12.

[0056] A generally U-shaped member 36 has one leg 38 of the "U" mounted on a frame part 40. The other leg 42 of the "U" has an offset bracing end 44.

[0057] For purposes of simplicity, the support 28 and member 36 can be considered to be part of the frame 12 and/or the adjusting assembly 18. Similarly, the component 58 can be considered to be part of the back rest 16 and/or the adjusting assembly 18.

[0058] The spring assembly 19 in this embodiment is in the form of a leaf spring. The leaf spring 19 has an elongate body 46 with a length L between spaced ends 48, 50, a width W, and a thickness T.

[0059] The leaf spring end 50 is anchored in the member 36 to project in cantilever fashion vertically upwardly therefrom. In this embodiment, the body 46 of the leaf spring 19 is preloaded so that it naturally assumes the dotted line shape and position.

[0060] The bracing end 44 of the member 36 is bifurcated, as seen in Fig. 4, with spaced edges 52 (one shown) at the extremity of the bracing end 44 engageable with one surface 54 of the leaf spring body 46 to maintain the body 46 in the straight vertical orientation, as shown in Fig. 3.

[0061] A part of the second component/back rest 16 (hereafter referred to only as the representative chair "back rest 16") is connected to the support 28 for movement relative thereto around the axis 26 as seen in Fig. 2. As a user situated on the seat 14 leans against the back rest 16, a force is generated as shown by the arrow 56 on the back rest component 58 that tends to pivot the component 58 in the direction of the arrow 60 around the axis 26.

[0062] The component 58 is configured so that an edge 61 on a cantilevered part 62 thereof bears against the leaf spring surface 54. In the

depicted state, this produces a force upon the leaf spring body 46, at a location A along the length of the body 46, that tends to bend the body 46 in the direction of the arrow 64 around a fulcrum location at 66 where the body 46 projects away from the part of the member 36 in which it is anchored. The leaf spring 19 thus biasably resists movement of the component 58, and the back rest 16 of which the component 58 is a part, with a first force.

[0063] The configuration in Fig. 3, while it could show a starting state without any force application on the seat 14, is also representative of the overall state of the apparatus 10 with an individual of a first weight seated thereon. This is an equilibrium position for the chair 10 resulting from the balancing of the user's weight and the upward biasing force generated by the spring 33 acting between the frame 12 and the seat 14 through the support 28.

[0064] In the event that an individual of greater weight assumes a sitting position on the seat 14, the support 28 and component 58 will translate further downwardly against the force of the spring 33, which causes the edge 61 on the back rest component 58 to bear upon the leaf spring 19 at a location below the location A. As a result, a shorter moment arm is established between the location where the edge 61 on the part 62 contacts the surface 54 and the fulcrum location at 66. Thus, the leaf spring 19 has an effectively shorter length, whereby a greater force is required to be applied to the leaf spring 19 to effect bending thereof as would in turn allow movement of the back rest 16 to reconfigure the chair 10.

[0065] To stabilize the support 28, a depending arm 70 thereon connects to the frame part 40 through a link 72. One link end 74 moves

about an axis 76 that is fixed relative to the frame part 40. The other link end 78 pivotally connects to the arm 70 for movement about an axis 80.

[0066] The bifurcated configuration of the leg 42 allows the part 62 on the component 58 to move in an opening 82 through the region at the offset bracing end 44 so that the member 36 does not interfere with the back rest component 58 as the back rest component 58 lowers under increasing user weight.

[0067] Accordingly, an increase in the weight of a user causes the leaf spring 19 to produce a greater resistance to movement of the back rest 16 relative to the frame 12. As a result, the chair is self-adjusting. The parts thereof can be engineered so that a desired relationship between the user's weight and the force required to move the back rest 16 are appropriately established.

[0068] In designing the chair 10 using a leaf spring component, the leaf spring body 46 may have a uniform cross-sectional shape as viewed orthogonally to its length. Alternatively, this shape may be non-uniform over at least a portion of its length. For example, as shown for a portion of the length of a modified form of body 46a, as shown in Fig. 5, the cross-sectional area varies progressively.

[0069] Tapering the cross-sectional area of the leaf spring over its length may allow further tuning of performance. Thickened regions may be provided to produce larger resistance forces for users at the higher weight end of the functional range.

[0070] The leaf spring material may be metal, plastic, a composite, etc. The leaf spring may be straight, curved, with changing cross-sectional shapes, etc. Changing shapes, pre-loading, changing dimensions, etc., are just examples of options that might be practiced to design and tune the adjusting assemblies so that they adapt more appropriately to users throughout a workable user weight range.

[0071] In a still further modified form of the structure in Fig. 3, as shown in Fig. 6, the link 72a, corresponding to the link 72, can be connected to the frame 12 for pivoting movement about an axis 84 between its ends 74a, 78a. Accordingly, as the arm 70a moves downwardly under increasing user weight, link 72a pivots around the axis 84 so that the member 36a simultaneously moves upwardly. Thus, for each incremental movement of the seat 14 downwardly, there is a greater movement of the edge 61 on the part 62 toward the fulcrum location 66 for the leaf spring 19 than occurs with the design in Figs. 3 and 4.

[0072] In Fig. 7, a modified form of chair is shown at 10′, with elements corresponding to those in Figs. 3 and 4 identified with like reference numerals and a " ′ " designation.

[0073] The chair 10′ has a back rest component 58′ that acts against a leaf spring 19′ that is anchored in a component 36′.

[0074] In this embodiment, the leaf spring body 46′ is mounted at a slight angle α to vertical. Accordingly, the part 62′ of the component 58′ tends to bind more with the leaf spring 19′ as it slides downwardly

thereagainst under increasing user weight. This binding creates frictional forces that augment the upward balancing force produced by the spring 33′.

[0075] Additionally, the chair 10′ utilizes cooperating toothed elements 86, 88, 90 that interact to cause movement of the frame part 40′, arm 70′ and leg 38′ relative to each other and the frame part 40′ that replicates the relative movement that occurs with corresponding elements in the embodiment shown in Figs. 3 and 4. The toothed element 88 is in the form of a differential pinion that turns around an axis 92. Larger and smaller diameter toothed portions 94, 96, respectively, engage toothed racks 98, 100, respectively on the leg 38′ and arm 70′. Turning of the toothed element 88 in the direction of the arrow 102 under increasing user weight causes simultaneous upward movement of the member 36′ and downward movement of the support 28′.

[0076] In Fig. 8, a further modified form of chair, according to the present invention, is shown at 10". The chair 10" incorporates a back rest component 58" that interacts with a leaf spring 19" and leg 42" in the same way that the corresponding components interact on the chair 10 in Figs. 3 and 4.

[0077] Further, the chair 10" incorporates toothed elements 86", 88", 90" which function essentially in the same manner as the corresponding components on the chair 10′ in Fig. 7. The primary difference between these embodiments is that the leg 38" has a curved shape that moves in a complementarily-curved channel 104 on the frame part 40". Whereas the support 28′ associated with the seat 14 and member 36′ move relative to each other in parallel, straight paths, the member 36" moves in a curved

path, as dictated by the curvature of the leg 38" and cooperating channel 104. This curvature nominally matches the curved shape of the leaf spring 19" which is pre-loaded from the dotted line position to the operative, solid line position in Fig. 8. Accordingly, the relative movement of the member 36" and support 28" causes the part 62" that engages the leaf spring 19" to generally follow the pre-loaded curvature of the leaf spring 19".

[0078] In a further modified form of chair, as shown at 10''' in Fig. 9, the basic construction of Figs. 3 and 7 is utilized with the exception that the leaf spring 19''' is fixedly mounted to the component 58''' and acts against the member 36''', i.e., this component arrangement is reversed from that in the earlier embodiments. The leaf spring 19''' is pre-loaded from the dotted line position into the solid line position which is maintained by the abutment thereof to the member 36'''.

[0079] In Figs. 10 and 11, a further modified form of chair, according to the invention, is shown at $10^{4'}$. In this embodiment, multiple leaf springs $19a^{4'}$, $19b^{4'}$, $19c^{4'}$, $19d^{4'}$ are utilized, each with an end anchored in a block 105.

[0080] In this embodiment, the post $30^{4'}$ has a toothed rack $100^{4'}$ that cooperates with a toothed, differential pinion element $88^{4'}$, that cooperates in turn with a toothed rack $98^{4'}$ making up part of a toothed element $86^{4'}$ on a member $36^{4'}$.

[0081] Downward movement of the post $30^{4'}$ under the weight applied to the seat 14 causes the toothed rack $100^{4'}$ and toothed element $88^{4'}$, and

separately the toothed elements $88^{4'}$, $86^{4'}$, to interact to translate the member $36^{4'}$ in the direction of the arrow 106.

[0082] As the weight on the seat 14 is increased, the member $36^{4'}$ will move continuously in the direction of the arrow 106 to successively engage free ends of angled extensions 108a, 108b, 108c at the ends of leaf springs $19a^{4'}$, $19b^{4'}$, $19c^{4'}$, successively. The extensions 108a, 108b, 108c and one surface 110 on the leaf spring $19d^{4'}$ reside in a reference plane P. As user applied weight increases, a surface 112 on the member $36^{4'}$ moves along this plane P to successively engage the extensions 108a, 108b, 108c and eventually the surface 110, whereby the surface 112 defines separate fulcrum locations, corresponding to the fulcrum location 66, for the free ends of the leaf springs $19a^{4'}$, $19b^{4'}$, $19c^{4'}$, $19d^{4'}$. In other words, the leaf springs $19a^{4'}$, $19b^{4'}$, $19c^{4'}$, $19d^{4'}$ are successively operatively engaged under increasing user weight. As a result, the resistance force to the applied leaning force on the back rest 18 in the direction of the arrow 114 is generated by some or all of the leaf springs $19a^{4'}$, $19b^{4'}$, $19c^{4'}$, $19d^{4'}$ as they are borne against the surface 112 under the user leaning force.

[0083] It is important to point out that the rack and pinion components are not restricted to any specific orientation. The cooperating rack and pinion components may be oriented in virtually any orientation that can be adapted to cause movement of the associated parts in the same manner.

[0084] Further, one or all of the leaf springs $19a^{4'}$, $19b^{4'}$, $19c^{4'}$, $19d^{4'}$ could be pre-loaded or in curved tracks.

[0085] In an alternative form of the basic structure in Figs. 10 and 11, as shown for the chair $10^{5'}$ in Figs. 12 and 13, the member $36^{5'}$ vertically advanced, or advanced in another direction, is caused to interact with some, or all, of a plurality, and in this case three, leaf springs $19a^{5'}$, $19b^{5'}$, $19c^{5'}$, which are arranged to be substantially coplanar, as opposed to stacked as the leaf springs $19a^{4'}$, $19b^{4'}$, $19c^{4'}$, $19d^{4'}$ are on the chair $10^{4'}$.

[0086] Under an increasing user weight on the seat 14, a surface $112^{5'}$ on the member $36^{5'}$ engages successively against surfaces $116a^{5'}$, $116b^{5'}$, $116c^{5'}$. As shown in Fig. 12, the particular exemplary weight causes engagement of the surface $112^{5'}$ with only two of the leaf springs $19a^{5'}$, $19b^{5'}$.

[0087] The leaning force on the back rest 18 is applied on an actuator 118 in a direction into the page, as indicated by the "X" at 120. Resistance to the leaning force is generated in the same manner for the chair $10^{5'}$ as for the chair $10^{4'}$ but with the different arrangement of leaf springs.

[0088] In an alternative form, each of the leaf springs in Figs. 12 and 13 might be substituted for by coil springs, compression/tension springs, or a torsion rod of the type described in an additional embodiment below. One or more springs might be utilized. More springs allow for finer control. Each spring can be individually tuned.

[0089] In Fig. 14, a further modified form of chair, according to the invention, is shown at $10^{6'}$. A post $30^{6'}$ has a toothed rack $100^{6'}$ that cooperates with a differential pinion/toothed element $88^{6'}$. The toothed element $88^{6'}$ moves together with a component $58^{6'}$ that is part of the back rest 16 or otherwise moves in response to movement thereof. The

component $58^{6'}$ is mounted for pivoting movement relative to a frame part 122 around an axis 124 as the post $30^{6'}$ raises and lowers as different weight forces are applied to and removed from the seat 14.

[0090] The leaning force on the back rest 16 is applied to an arm 126 on the component $58^{6'}$ in the direction of the arrow 128.

[0091] The frame part 122 has a "U" shape with spaced legs 130, 132. The component $58^{6'}$ is mounted on the leg 130.

[0092] The toothed element $88^{6'}$ cooperates with a separate toothed element 134 that moves guidingly in a channel 136 on the component $58^{6'}$. In this embodiment, the toothed element 134 and cooperating channel 136 have a curved shape so that the toothed element 134 is movable guidingly in an arcuate path. A row of teeth 138 on one side of the toothed element 134 engage teeth 140 on the toothed element $88^{6'}$ so that the toothed element 134 moves back and forth within the channel 136 as the toothed element $88^{6'}$ is rotated in opposite directions around its axis 124.

[0093] The adjusting assembly $18^{6'}$ in this embodiment consists of an elongate spring assembly $19^{6'}$, in this particular embodiment shown as a coil spring under tension. The spring $19^{6'}$ is connected between an end location at 144 on the toothed element 134 and the leg 132 on the frame part 122.

[0094] As a user sits on the seat 14, without leaning against the back rest 16, the post $30^{6'}$ moves against the force of the spring $33^{6'}$ downwardly, thereby turning the toothed element $88^{6'}$ in the direction of the arrow 146, which causes the toothed element 134 to move in the direction of the arrow

148 in the channel 136. The precise position of the toothed element 134 in the channel 136 is dictated by the weight of the user.

[0095] Once the user is seated and leans back against the back rest 16, separate teeth 150, 152, on the toothed element 134 and component $58^{6'}$, within the channel 136, engage, thereby to fix the position of the toothed element 134 within the channel 136.

[0096] Under an applied leaning force in the direction of the arrow 128 on the arm 126, the component $58^{6'}$, and the associated back rest 16, tend to pivot around the axis 124, which is resisted by the force in the spring 142. Because the distance between the axis 124 and end location 144 where the resistant spring force is applied is increased with increasing weight of a user, the resistant force generated by the coil spring $19^{6'}$ is likewise increased.

[0097] The chair $10^{7'}$ in Fig. 15 operates on the same basic principles as the chair $10^{6'}$ in Fig. 14.

[0098] More particularly, a toothed element $134^{7'}$ moves in a channel $136^{7'}$ having an arcuate shape. A coil spring $19^{7'}$ connects between the toothed element $134^{7'}$ and a leg $132^{7'}$ on a U-shaped frame part $122^{7'}$.

[0099] The primary difference between the structure in Fig. 15, compared to that in Fig. 14, is that the toothed element $134^{7'}$ is part of, and moves with, an elongate component 154 that is pivoted about an axis 156 that is the approximate location at which the spring $19^{7'}$ connects to the leg $132^{7'}$. The component 154 has a curved edge 158 with a constant radius R centered on the axis 156. That edge 158 has teeth 160 which mesh with

teeth 162 on a post $30^{7'}$ that has a toothed rack $100^{6'}$ where the teeth 162 are located.

[00100] Increased weight of a user on the seat 14 pivots the component 154 in the direction of the arrow 164 around the axis 156 to move the toothed element $134^{7'}$ in the direction of the arrow 166 in the channel $136^{7'}$. In so doing, the distance between the spring mount location at $144^{7'}$ on the toothed element $134^{7'}$ and the pivot axis $124^{7'}$ for the component $58^{7'}$ increases, thereby to cause an increase in the resistance to tilting of the back rest 16 in the same manner as occurs with the chair $10^{6'}$.

[00101] In Fig. 16, a further modified form of chair is shown at $10^{8'}$ wherein the spring assembly $19^{8'}$ includes an elongate torsion component 168 with a lengthwise axis 170. The adjusting assembly $18^{8'}$ further includes an actuating component 172 that has a portion 174 keyed to the periphery of the torsion component 168 to move slidingly axially therealong in the same angular orientation. With the torsion component 168 fixed in relationship to the frame $12^{8'}$, a user's weight on the seat 14 causes movement of the actuating component 172 through cooperation between a toothed rack 176 thereon and intermediate input structure 178 of suitable construction. Increased weight on the seat 14 causes the actuating component 172 to shift closer to a base 180 of the torsion component 168 closer to where it is anchored to the frame $12^{8'}$.

[00102] A leaning force on the back rest 16 is applied to the torsion component generally in the direction of the arrow 182, tending to turn the torsion component 168 around the axis 170. For the back rest 16 to reposition, the torsion component 168 must be twisted around the axis 170.

This twisting action is resisted to a greater degree with the actuating component 172 closer to the base 180 under a heavier user weight.

[00103] On the other hand, with the actuating component 172 shifted towards its free end 184, as occurs with a lighter user, the torsion component 168 can be more readily twisted about its length and the axis 170.

[00104] In Fig. 17, a still further modified form of chair, according to the invention, is shown at $10^{9'}$ with an adjusting assembly $18^{9'}$ cooperating between a seat 14 and back rest 16. A spring assembly $19^{9'}$ is mounted to a frame $12^{9'}$ and consists of separate leaf springs with bodies $46^{9'}$ each with spaced ends supported by blocks 186, 188 on the frame $12^{9'}$. With this arrangement, the bodies $46^{9'}$ and blocks 186, 188 cooperatively extend around an opening 190 with a width W.

[00105] An elongate, wedge-shaped actuating component 192 with a uniform width W1, slightly less than the width W, extends through the opening 190.

[00106] A toothed rack 194 is provided on the actuating component 192 and moves therewith. In response to a weight force being applied to the seat 14, and through an appropriate force transfer structure 196, the toothed rack 194 and actuating component 192 are shifted in the direction of the arrow 198.

[00107] By reason of the wedge shape, the actuating component 192 has oppositely facing actuating surfaces S1, S2, each with one dimension D1 at one end and a larger dimension D2 at its opposite end, that abut to, or reside adjacent to, facing surfaces S3, S4, respectively, on the bodies $46^{9'}$.

As the actuating component 192 shifts in the direction of the arrow 198, a progressively larger area of the surfaces S1, S2 confronts the leaf spring bodies $46^{9'}$.

[00108] The back rest 16 imparts a force to the actuating component 192 through a suitable force transfer structure at 202 tending to turn the actuating component 192 around an axis 204.

[00109] Accordingly, a user leaning force generates a force on the actuating component 192 that bears the surfaces S1, S2 simultaneously against the surfaces S3, S4 of the leaf spring bodies $46^{9'}$ between the spaced supported ends. The larger the area of the surfaces S1, S2 in contact with the bodies $46^{9'}$, the more resistant the bodies $46^{9'}$ are to deformation. This translates into a greater resistance to the repositioning of the back rest 16 for a larger weight application on the seat 14.

[00110] Further, as the actuating component 192 turns around the axis 204, the force transfer between the actuating component 192 and bodies $46^{9'}$ occurs primarily at corners C1, C2, C3, C4 of the actuating component 192, which bear against reinforced and thus more rigid parts of the bodies $46^{9'}$ adjacent to the blocks 186, 188 as more user weight is applied. Thus, greater resistance to back rest movement results.

[00111] In a still further alternative form, as shown in Fig. 18, multiple adjusting assemblies 18 are utilized between a cooperating first component(s)/seat 14 and second component(s)/back rest 16 on a frame 12.

[00112] Ideally, the apparatus/chair 10 will adapt to users weighing as much as 350 pounds, or more. While one spring assembly might be

designed for a total desired weight range to be accommodated, two or more spring assemblies might be utilized and their function and operation coordinated.

[00113] Further, different spring assemblies might be utilized with coordinated operation. For example, one spring assembly may cover a range of 30-175 pounds with a second spring assembly operational for user weights in the range of 175-350 pounds. More springs/spring assemblies might be added to further split up the weight ranges.

[00114] The spring assemblies may be designed in relationship to seat movement. For example, one spring assembly may be operational for 0-.5" of seat movement with a separate spring assembly operational for seat movement of 0.5"-1", where 1" is the seat movement for the maximum weight for which the apparatus is designed.

[00115] The examples herein of spring assembly/spring construction should not be viewed as limiting. Different spring types and combinations are contemplated. For example, the springs may be curved, coiled with different turn diameter and rise, hybrid shapes, concentric arrangements, etc. Coil springs, or the like, may produce forces under either compression or tension.

[00116] The foregoing disclosure of specific embodiments is intended to be illustrative of the broad concepts comprehended by the invention.

CLAIMS

1. A reconfigurable apparatus comprising:

a frame;

at least a first component on the frame upon which a force is applied in a first manner in using the apparatus for its intended purpose;

at least a second component on the frame that is movable relative to the at least first component and/or the frame and upon which a force can be applied in a second manner to reconfigure the apparatus by moving the at least second component relative to the at least first component and/or the frame; and

an adjusting assembly cooperating between the at least first component and the at least second component and configured so that as an incident of the force being applied in the first manner changing, the force being applied in the second manner required to reconfigure the apparatus changes.

2. The reconfigurable apparatus according to claim 1 wherein the second component is guided in pivoting movement relative to the at least first component and/or the frame around an axis.

3. The reconfigurable apparatus according to claim 1 wherein the reconfigurable apparatus is a piece of furniture.

4. The reconfigurable apparatus according to claim 3 wherein the reconfigurable apparatus is a chair with the at least first component comprising a seat upon which a user applies the force in the first manner by sitting in the chair.

5. The reconfigurable apparatus according to claim 4 wherein the at least second component comprises a back rest against which a user seated in the chair leans to exert the force in the second manner to reconfigure the chair.

6. The reconfigurable apparatus according to claim 5 wherein the adjusting assembly comprises a spring assembly that is configured to exert a force that resists movement of the at least second component and that varies as a magnitude of the force applied in the first manner varies.

7. The reconfigurable apparatus according to claim 6 wherein the spring assembly comprises a leaf spring with a length that is bendable about a fulcrum location and the adjusting assembly and at least second component are configured so that as the force applied in the first manner changes in magnitude an effective length of the leaf spring changes.

8. The reconfigurable apparatus according to claim 1 wherein the adjusting assembly is configured so that an increase in magnitude of the force applied in the first manner causes an increase in magnitude of the force applied in the second manner required to reconfigure the apparatus.

9. The reconfigurable apparatus according to claim 7 wherein the leaf spring has a cross-sectional shape as viewed orthogonally to its length that is non-uniform over at least a portion of the length of the leaf spring.

10. The reconfigurable apparatus according to claim 6 wherein the spring assembly comprises a plurality of leaf springs each with a length that bends around a fulcrum location.

11. The reconfigurable apparatus according to claim 10 wherein the adjusting assembly and at least second component are configured so that a different number of said plurality of leaf springs exerts a force that resists movement of the at least second component based upon a magnitude of the force applied in the first manner.

12. The reconfigurable apparatus according to claim 6 wherein the spring assembly comprises an elongate spring component with a length that exerts the force that resists movement of the at least second component in line with the length of the spring.

13. The reconfigurable apparatus according to claim 12 wherein the second component is guided in pivoting movement relative to the at least first component and/or the frame around an axis and the second component and adjusting assembly are configured so that the elongate spring component exerts the force that resists movement of the at least second component at a distance from the axis that changes as a magnitude of the force applied in the first manner changes.

14. The reconfigurable apparatus according to claim 6 wherein the spring assembly comprises at least one leaf spring.

15. The reconfigurable apparatus according to claim 14 wherein the at least one leaf spring has a length and spaced supported ends and the apparatus further comprises an actuating component that is configured to bear against the one leaf spring between the spaced supported ends to resist movement of the at least second component as the force is applied in the second manner with a magnitude that reconfigures the apparatus.

16. The reconfigurable apparatus according to claim 6 wherein the spring assembly comprises a torsion component with an axis and the apparatus further comprises an actuating component that is configured to turn the torsion component around the axis to generate the force that resists movement of the at least second component as the force is applied in the first manner with a magnitude that reconfigures the apparatus.

17. The reconfigurable apparatus according to claim 16 wherein the actuating component and torsion component are configured so that the actuating component engages the torsion component at different locations along the axis of the torsion component as a magnitude of the force applied in the first manner changes.

18. The reconfigurable apparatus according to claim 1 wherein the adjusting assembly comprises cooperating toothed elements that move relative to each other as a magnitude of the force applied in the first manner reaches a predetermined level.

19. The reconfigurable apparatus according to claim 4 wherein the seat is configured to move vertically relative to the frame with the first force applied in the first manner with a magnitude that reaches a predetermined level.

20. The reconfigurable apparatus according to claim 20 wherein the apparatus further comprises a supporting biasing assembly that normally biasably urges the seat upwardly relative to the frame.

ABSTRACT OF THE DISCLOSURE

[00117] A reconfigurable apparatus having: a frame; at least a first component on the frame upon which a force is applied in a first manner in using the apparatus for its intended purpose; and at least a second component on the frame that is movable relative to the at least first component and/or the frame and upon which a force can be applied in a second manner to reconfigure the apparatus by moving the at least second component relative to the at least first component and/or the frame. An adjusting assembly cooperates between the at least first component and the at least second component and is configured so that as an incident of the force being applied in the first manner changing, the force being applied in the second manner required to reconfigure the apparatus changes.

1/6

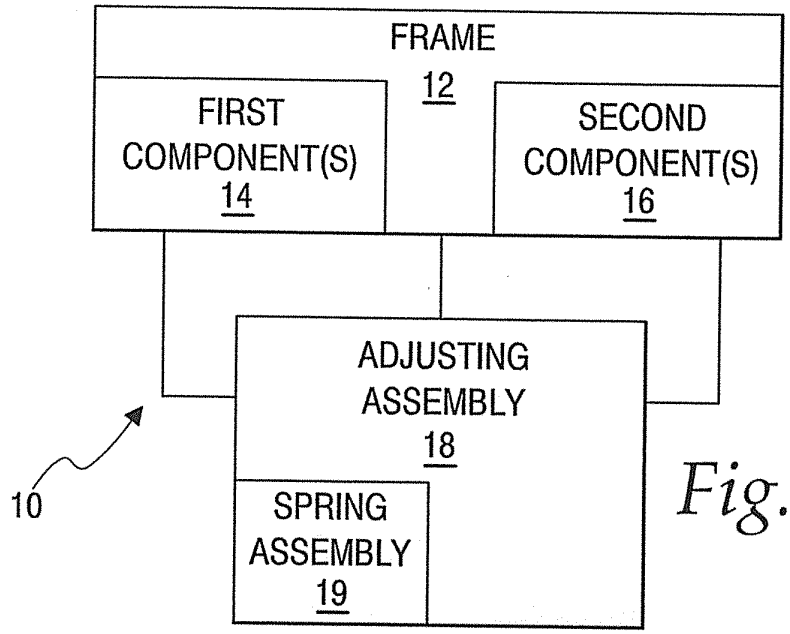
FRAME
12
FIRST COMPONENT(S)
14
SECOND COMPONENT(S)
16
ADJUSTING ASSEMBLY
18
SPRING ASSEMBLY
19
10

Fig. 1

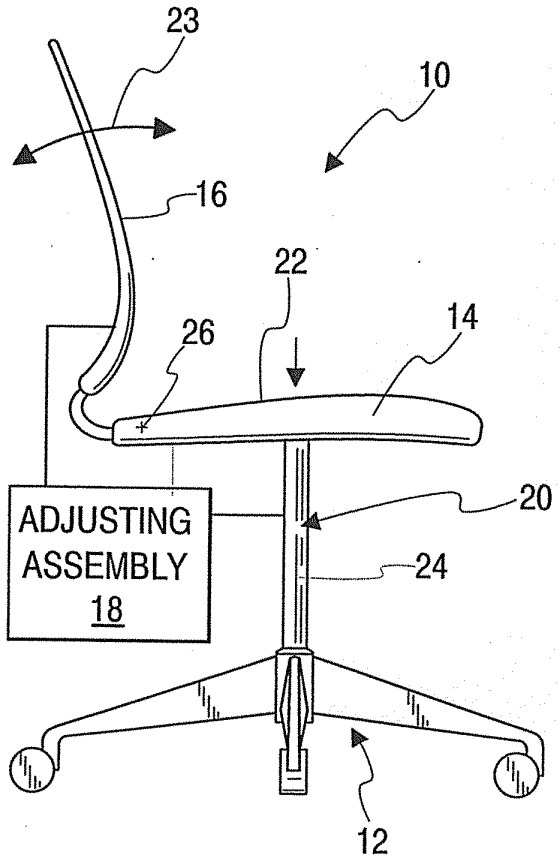
23
10
16
22
14
26
20
24
ADJUSTING ASSEMBLY
18
12

Fig. 2

Fig. 6

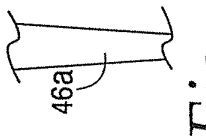

Fig. 5

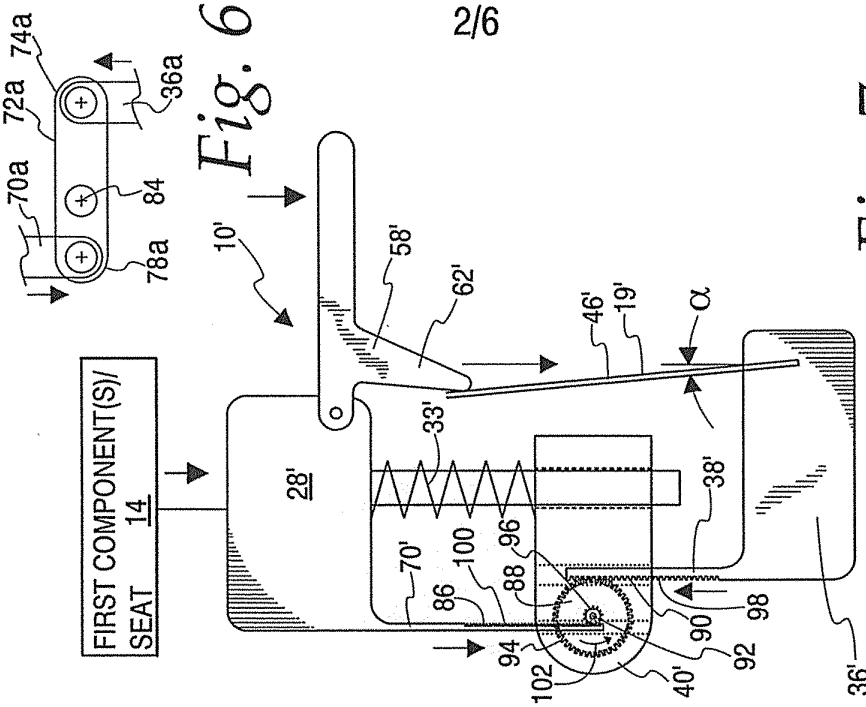

Fig. 7

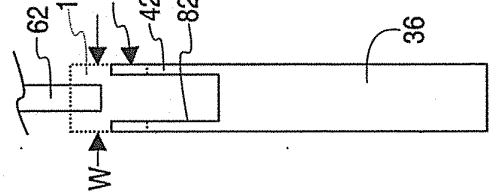

Fig. 4

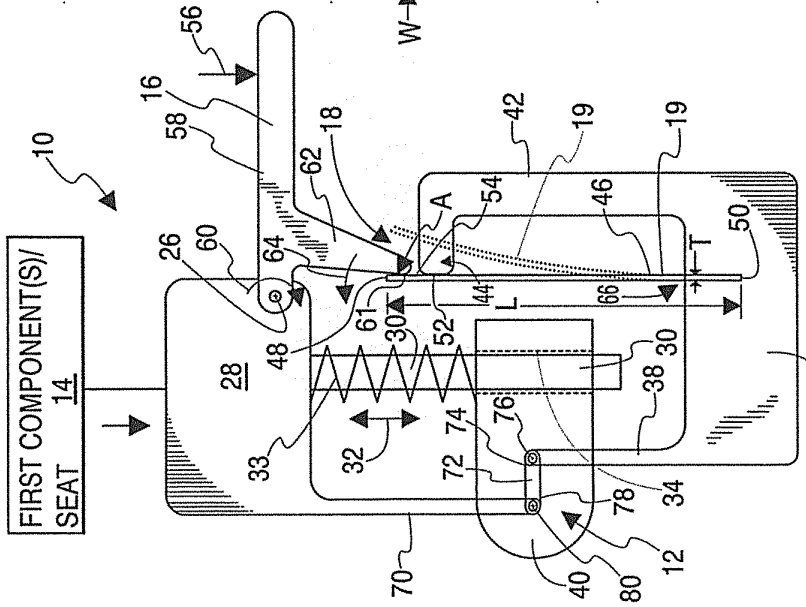

Fig. 3

3/6

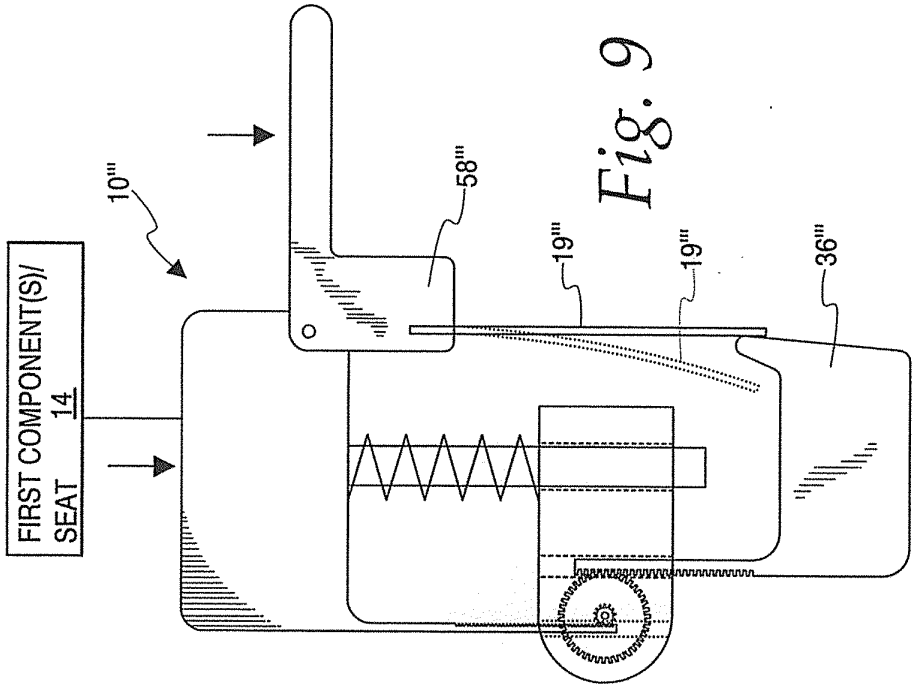
FIRST COMPONENT(S)/
SEAT 14
10'''
58'''
19'''
19'''
36'''

Fig. 9

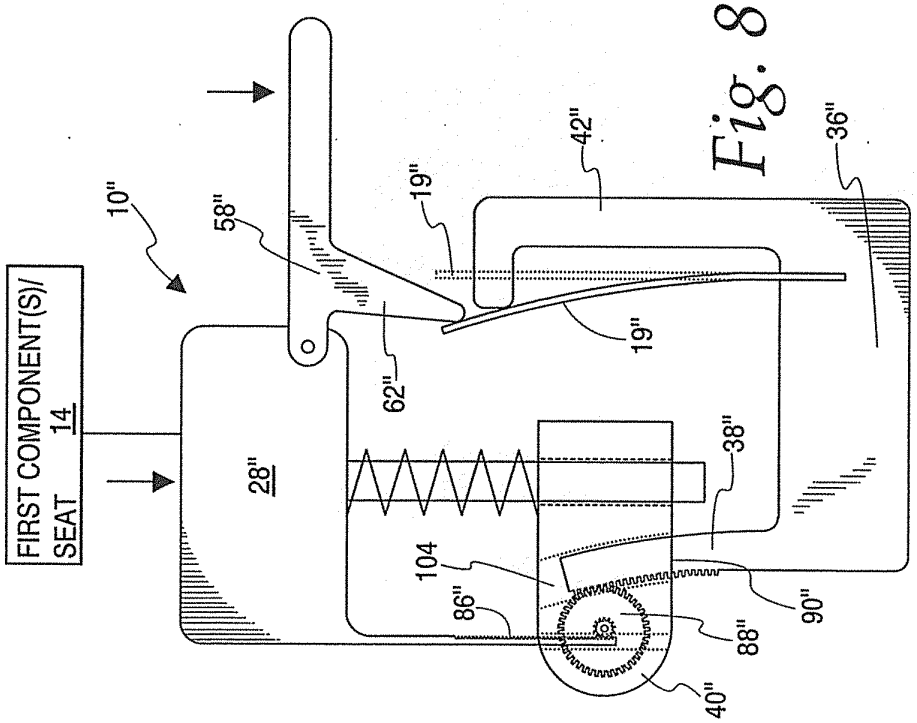
FIRST COMPONENT(S)/
SEAT 14
10''
58''
19''
42''
36''
62''
19''
28''
38''
104
86''
88''
90''
40''

Fig. 8

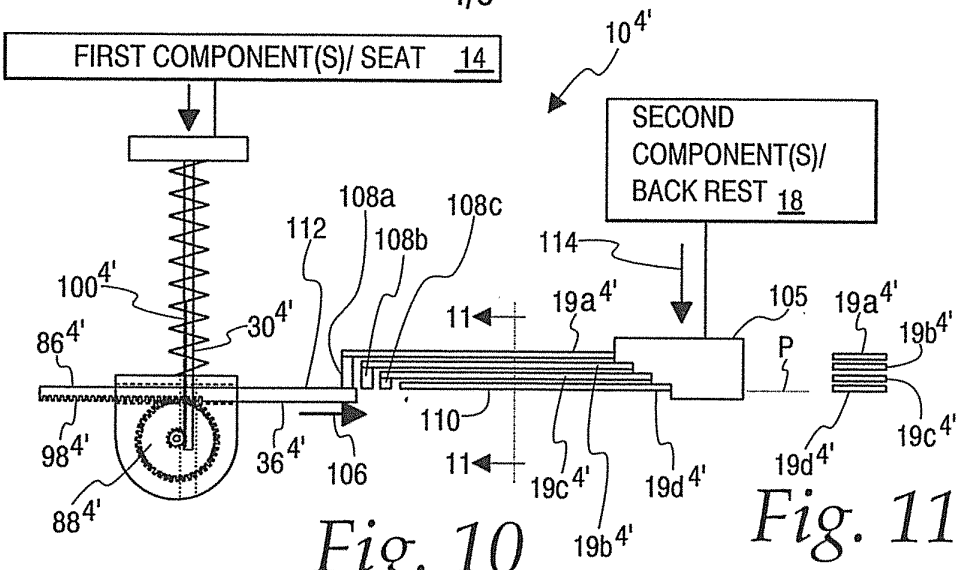

Fig. 10

Fig. 11

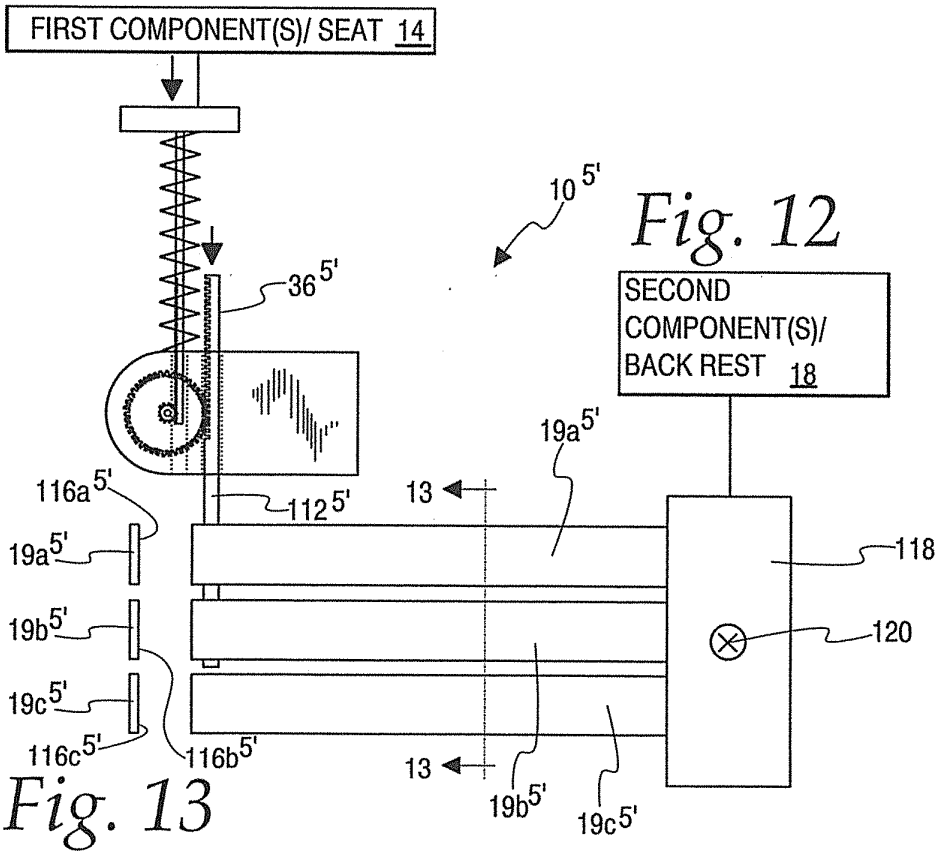

Fig. 12

Fig. 13

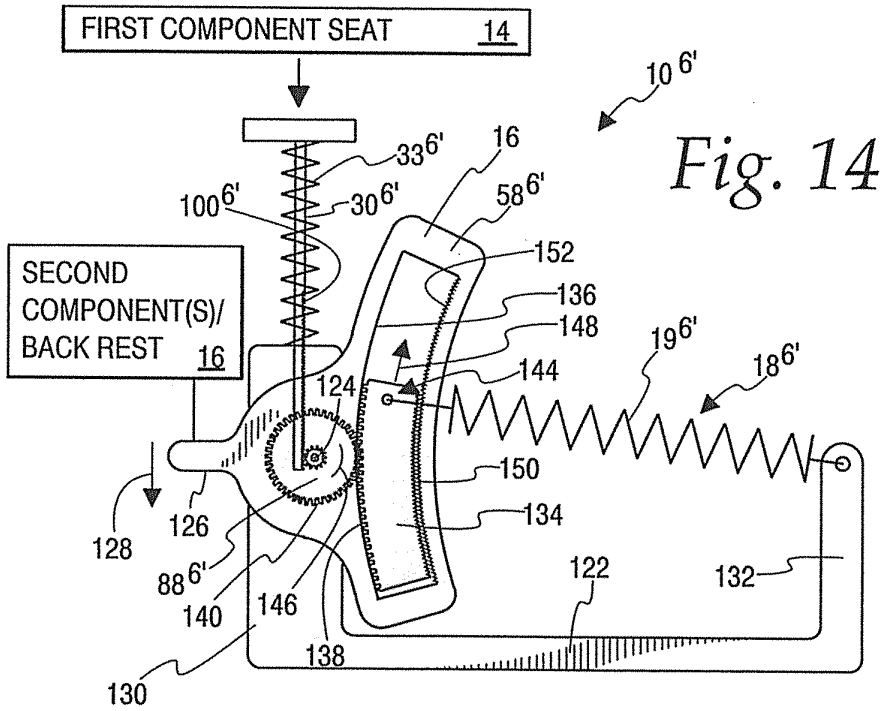
FIRST COMPONENT SEAT 14
SECOND COMPONENT(S)/ BACK REST 16
10 6'
33 6'
16
100 6'
30 6'
58 6'
152
136
148
19 6'
18 6'
144
124
150
134
128
126
88 6'
140
146
138
130
122
132

Fig. 14

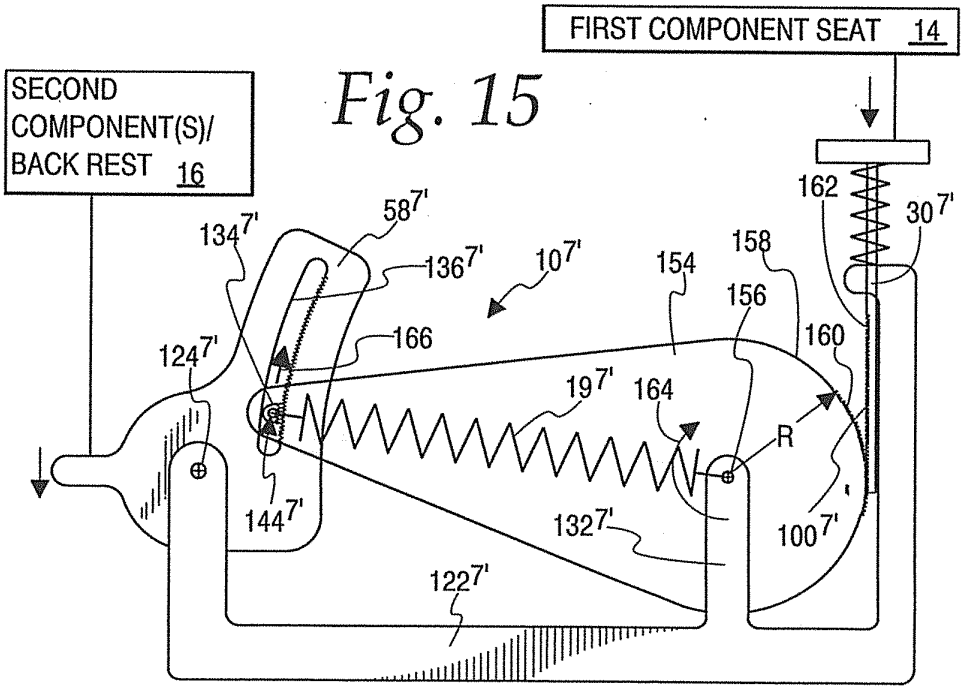
FIRST COMPONENT SEAT 14
SECOND COMPONENT(S)/ BACK REST 16
162
30 7'
58 7'
134 7'
136 7'
10 7'
154
158
156
160
166
124 7'
19 7'
164
R
144 7'
132 7'
100 7'
122 7'

Fig. 15

6/6

Fig. 16

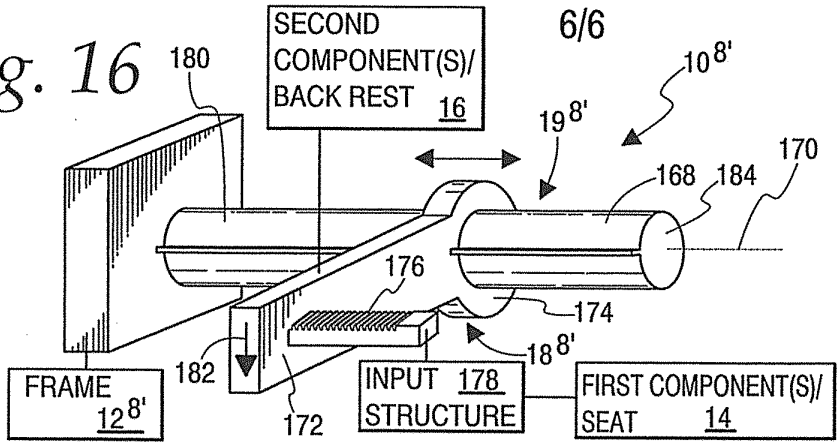

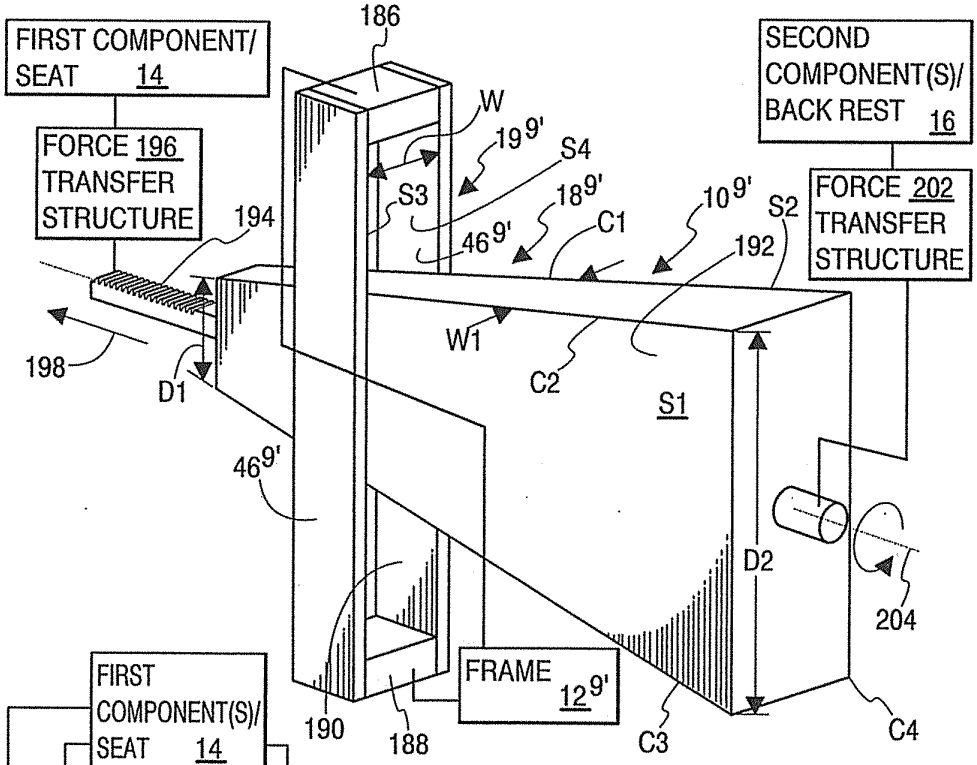

Fig. 17

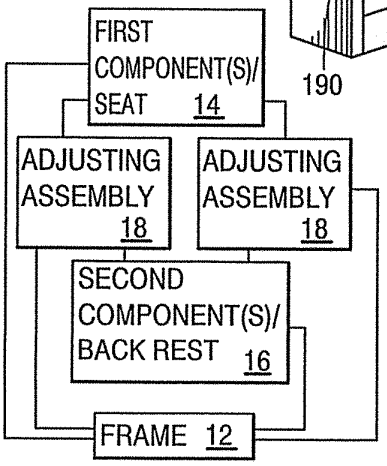

Fig. 18

Under the Paperwork Reduction Act of 1995, no persons are required to respond to a collection of information unless it contains a valid OMB control number.

Application Data Sheet 37 CFR 1.76	Attorney Docket Number	DEJ10730P00071US
	Application Number	
Title of Invention	APPARATUS WITH WEIGHT RESPONSIVE CHANGEABLE ADJUSTING CHARACTERISTICS	

The application data sheet is part of the provisional or nonprovisional application for which it is being submitted. The following form contains the bibliographic data arranged in a format specified by the United States Patent and Trademark Office as outlined in 37 CFR 1.76.
This document may be completed electronically and submitted to the Office in electronic format using the Electronic Filing System (EFS) or the document may be printed and included in a paper filed application.

Secrecy Order 37 CFR 5.2:

☐ Portions or all of the application associated with this Application Data Sheet may fall under a Secrecy Order pursuant to 37 CFR 5.2 (Paper filers only. Applications that fall under Secrecy Order may not be filed electronically.)

Inventor Information:

Inventor 1 Remove

Legal Name

Prefix	Given Name	Middle Name	Family Name	Suffix
	Aaron		DeJule	

Residence Information (Select One) ● US Residency Non US Residency Active US Military Service

City	River Forest	State/Province	IL	Country of Residence i	US

Mailing Address of Inventor:

Address 1	306 Park Avenue		
Address 2			
City	River Forest	State/Province	IL
Postal Code	60305	Country i	US

Inventor 2 Remove

Legal Name

Prefix	Given Name	Middle Name	Family Name	Suffix
	Scott		Padiak	

Residence Information (Select One) ◉ US Residency Non US Residency Active US Military Service

City	Glance	State/Province	IL	Country of Residence i	US

Mailing Address of Inventor:

Address 1	1170 Terrace Court		
Address 2			
City	Glance	State/Province	IL
Postal Code	60022	Country i	US

Inventor 3 Remove

Legal Name

Prefix	Given Name	Middle Name	Family Name	Suffix
	Paul	C.	Evans	

Residence Information (Select One) ◉ US Residency Non US Residency Active US Military Service

Under the Paperwork Reduction Act of 1995, no persons are required to respond to a collection of information unless it contains a valid OMB control number.

Application Data Sheet 37 CFR 1.76	Attorney Docket Number	DEJ10730P00071US
	Application Number	
Title of Invention	APPARATUS WITH WEIGHT RESPONSIVE CHANGEABLE ADJUSTING CHARACTERISTICS	

City	Bellaire	**State/Province**	MI	**Country of Residence**	US

Mailing Address of Inventor:

Address 1	2343 Bush Road		
Address 2			
City	Bellaire	**State/Province**	MI
Postal Code	49614	**Country**	US

All Inventors Must Be Listed - Additional Inventor Information blocks may be generated within this form by selecting the **Add** button. Add

Correspondence Information:

Enter either Customer Number or complete the Correspondence Information section below. For further information see 37 CFR 1.33(a).

☐ **An Address is being provided for the correspondence Information of this application.**

Customer Number	32116		
Email Address	docketing@woodphillips.com	Add Email	Remove Email

Application Information:

Title of the Invention	APPARATUS WITH WEIGHT RESPONSIVE CHANGEABLE ADJUSTING CHARACTERISTICS		
Attorney Docket Number	DEJ10730P00071US	**Small Entity Status Claimed**	☒
Application Type	Nonprovisional		
Subject Matter	Utility		
Total Number of Drawing Sheets (if any)	6	**Suggested Figure for Publication (if any)**	

Filing By Reference:

Only complete this section when filing an application by reference under 35 U.S.C. 111(c) and 37 CFR 1.57(a). Do not complete this section if application papers including a specification and any drawings are being filed. Any domestic benefit or foreign priority information must be provided in the appropriate section(s) below (i.e., "Domestic Benefit/National Stage Information" and "Foreign Priority Information").

For the purposes of a filing date under 37 CFR 1.53(b), the description and any drawings of the present application are replaced by this reference to the previously filed application, subject to conditions and requirements of 37 CFR 1.57(a).

Application number of the previously filed application	Filing date (YYYY-MM-DD)	Intellectual Property Authority or Country

Publication Information:

☐ Request Early Publication (Fee required at time of Request 37 CFR 1.219)

☐ **Request Not to Publish.** I hereby request that the attached application not be published under 35 U.S.C. 122(b) and certify that the invention disclosed in the attached application **has not and will not** be the subject of an application filed in another country, or under a multilateral international agreement, that requires publication at eighteen months after filing.

Application Data Sheet 37 CFR 1.76	Attorney Docket Number	DEJ10730P00071US
	Application Number	
Title of Invention	APPARATUS WITH WEIGHT RESPONSIVE CHANGEABLE ADJUSTING CHARACTERISTICS	

Representative Information:

Representative information should be provided for all practitioners having a power of attorney in the application. Providing this information in the Application Data Sheet does not constitute a power of attorney in the application (see 37 CFR 1.32).
Either enter Customer Number or complete the Representative Name section below. If both sections are completed the customer Number will be used for the Representative Information during processing.

Please Select One:	● Customer Number	US Patent Practitioner	◯ Limited Recognition (37 CFR 11.9)
Customer Number	32116		

Domestic Benefit/National Stage Information:

This section allows for the applicant to either claim benefit under 35 U.S.C. 119(e), 120, 121, 365(c), or 386(c) or indicate National Stage entry from a PCT application. Providing benefit claim information in the Application Data Sheet constitutes the specific reference required by 35 U.S.C. 119(e) or 120, and 37 CFR 1.78.
When referring to the current application, please leave the "Application Number" field blank.

Prior Application Status	Pending		Remove
Application Number	Continuity Type	Prior Application Number	Filing or 371(c) Date (YYYY-MM-DD)
	Claims benefit of provisional	62114706	2015-02-11

Additional Domestic Benefit/National Stage Data may be generated within this form by selecting the **Add** button. Add

Foreign Priority Information:

This section allows for the applicant to claim priority to a foreign application. Providing this information in the application data sheet constitutes the claim for priority as required by 35 U.S.C. 119(b) and 37 CFR 1.55. When priority is claimed to a foreign application that is eligible for retrieval under the priority document exchange program (PDX)[i] the information will be used by the Office to automatically attempt retrieval pursuant to 37 CFR 1.55(i)(1) and (2). Under the PDX program, applicant bears the ultimate responsibility for ensuring that a copy of the foreign application is received by the Office from the participating foreign intellectual property office, or a certified copy of the foreign priority application is filed, within the time period specified in 37 CFR 1.55(g)(1).

Remove

Application Number	Country[i]	Filing Date (YYYY-MM-DD)	Access Code[i] (if applicable)

Additional Foreign Priority Data may be generated within this form by selecting the **Add** button. Add

Application Data Sheet 37 CFR 1.76	Attorney Docket Number	DEJ10730P00071US
	Application Number	
Title of Invention	APPARATUS WITH WEIGHT RESPONSIVE CHANGEABLE ADJUSTING CHARACTERISTICS	

Statement under 37 CFR 1.55 or 1.78 for AIA (First Inventor to File) Transition Applications

☐ This application (1) claims priority to or the benefit of an application filed before March 16, 2013 and (2) also contains, or contained at any time, a claim to a claimed invention that has an effective filing date on or after March 16, 2013.
NOTE: By providing this statement under 37 CFR 1.55 or 1.78, this application, with a filing date on or after March 16, 2013, will be examined under the first inventor to file provisions of the AIA.

Application Data Sheet 37 CFR 1.76	Attorney Docket Number	DEJ10730P00071US
	Application Number	
Title of Invention	APPARATUS WITH WEIGHT RESPONSIVE CHANGEABLE ADJUSTING CHARACTERISTICS	

Authorization or Opt-Out of Authorization to Permit Access:

When this Application Data Sheet is properly signed and filed with the application, applicant has provided written authority to permit a participating foreign intellectual property (IP) office access to the instant application-as-filed (see paragraph A in subsection 1 below) and the European Patent Office (EPO) access to any search results from the instant application (see paragraph B in subsection 1 below).

Should applicant choose not to provide an authorization identified in subsection 1 below, applicant **must opt-out** of the authorization by checking the corresponding box A or B or both in subsection 2 below.

NOTE: This section of the Application Data Sheet is **ONLY** reviewed and processed with the **INITIAL** filing of an application. After the initial filing of an application, an Application Data Sheet cannot be used to provide or rescind authorization for access by a foreign IP office(s). Instead, Form PTO/SB/39 or PTO/SB/69 must be used as appropriate.

1. Authorization to Permit Access by a Foreign Intellectual Property Office(s)

A. Priority Document Exchange (PDX) - Unless box A in subsection 2 (opt-out of authorization) is checked, the undersigned hereby **grants the USPTO authority** to provide the European Patent Office (EPO), the Japan Patent Office (JPO), the Korean Intellectual Property Office (KIPO), the State Intellectual Property Office of the People's Republic of China (SIPO), the World Intellectual Property Organization (WIPO), and any other foreign intellectual property office participating with the USPTO in a bilateral or multilateral priority document exchange agreement in which a foreign application claiming priority to the instant patent application is filed, access to: (1) the instant patent application-as-filed and its related bibliographic data, (2) any foreign or domestic application to which priority or benefit is claimed by the instant application and its related bibliographic data, and (3) the date of filing of this Authorization. See 37 CFR 1.14(h)(1).

B. Search Results from U.S. Application to EPO - Unless box B in subsection 2 (opt-out of authorization) is checked, the undersigned hereby **grants the USPTO authority** to provide the EPO access to the bibliographic data and search results from the instant patent application when a European patent application claiming priority to the instant patent application is filed. See 37 CFR 1.14(h)(2).

The applicant is reminded that the EPO's Rule 141(1) EPC (European Patent Convention) requires applicants to submit a copy of search results from the instant application without delay in a European patent application that claims priority to the instant application.

2. Opt-Out of Authorizations to Permit Access by a Foreign Intellectual Property Office(s)

☐ A. Applicant **DOES NOT** authorize the USPTO to permit a participating foreign IP office access to the instant application-as-filed. If this box is checked, the USPTO will not be providing a participating foreign IP office with any documents and information identified in subsection 1A above.

☐ B. Applicant **DOES NOT** authorize the USPTO to transmit to the EPO any search results from the instant patent application. If this box is checked, the USPTO will not be providing the EPO with search results from the instant application.

NOTE: Once the application has published or is otherwise publicly available, the USPTO may provide access to the application in accordance with 37 CFR 1.14.

Under the Paperwork Reduction Act of 1995, no persons are required to respond to a collection of information unless it contains a valid OMB control number.

Application Data Sheet 37 CFR 1.76	Attorney Docket Number	DEJ10730P00071US
	Application Number	
Title of Invention	APPARATUS WITH WEIGHT RESPONSIVE CHANGEABLE ADJUSTING CHARACTERISTICS	

Applicant Information:

Providing assignment information in this section does not substitute for compliance with any requirement of part 3 of Title 37 of CFR to have an assignment recorded by the Office.

Applicant 1 Remove

If the applicant is the inventor (or the remaining joint inventor or inventors under 37 CFR 1.45), this section should not be completed. The information to be provided in this section is the name and address of the legal representative who is the applicant under 37 CFR 1.43; or the name and address of the assignee, person to whom the inventor is under an obligation to assign the invention, or person who otherwise shows sufficient proprietary interest in the matter who is the applicant under 37 CFR 1.46. If the applicant is an applicant under 37 CFR 1.46 (assignee, person to whom the inventor is obligated to assign, or person who otherwise shows sufficient proprietary interest) together with one or more joint inventors, then the joint inventor or inventors who are also the applicant should be identified in this section.

Clear

Assignee	Legal Representative under 35 U.S.C. 117	Joint Inventor
Person to whom the inventor is obligated to assign.	Person who shows sufficient proprietary interest	

If applicant is the legal representative, indicate the authority to file the patent application, the inventor is:

Name of the Deceased or Legally Incapacitated Inventor:

If the Applicant is an Organization check here. ☐

Prefix	Given Name	Middle Name	Family Name	Suffix

Mailing Address Information For Applicant:

Address 1			
Address 2			
City		**State/Province**	
Country		Postal Code	
Phone Number		Fax Number	
Email Address			

Additional Applicant Data may be generated within this form by selecting the Add button. Add

Assignee Information including Non-Applicant Assignee Information:

Providing assignment information in this section does not substitute for compliance with any requirement of part 3 of Title 37 of CFR to have an assignment recorded by the Office.

Application Data Sheet 37 CFR 1.76	Attorney Docket Number	DEJ10730P00071US
	Application Number	
Title of Invention	APPARATUS WITH WEIGHT RESPONSIVE CHANGEABLE ADJUSTING CHARACTERISTICS	

Assignee 1

Complete this section if assignee information, including non-applicant assignee information, is desired to be included on the patent application publication. An assignee-applicant identified in the "Applicant Information" section will appear on the patent application publication as an applicant. For an assignee-applicant, complete this section only if identification as an assignee is also desired on the patent application publication.

Remove

If the Assignee or Non-Applicant Assignee is an Organization check here. ☐

Prefix	Given Name	Middle Name	Family Name	Suffix

Mailing Address Information For Assignee including Non-Applicant Assignee:

Address 1			
Address 2			
City		**State/Province**	
Country i		Postal Code	
Phone Number		Fax Number	
Email Address			

Additional Assignee or Non-Applicant Assignee Data may be generated within this form by selecting the Add button. Add

Signature:

Remove

NOTE: This Application Data Sheet must be signed in accordance with 37 CFR 1.33(b). **However, if this Application Data Sheet is submitted with the INITIAL filing of the application and either box A or B is not checked in subsection 2 of the "Authorization or Opt-Out of Authorization to Permit Access" section, then this form must also be signed in accordance with 37 CFR 1.14(c).**

This Application Data Sheet **must** be signed by a patent practitioner if one or more of the applicants is a **juristic entity** (e.g., corporation or association). If the applicant is two or more joint inventors, this form must be signed by a patent practitioner, **all** joint inventors who are the applicant, or one or more joint inventor-applicants who have been given power of attorney (e.g., see USPTO Form PTO/AIA/81) on behalf of **all** joint inventor-applicants.

See 37 CFR 1.4(d) for the manner of making signatures and certifications.

Signature	/John S. Mortimer/			Date (YYYY-MM-DD)	2016-02-10
First Name	John	Last Name	Mortimer	Registration Number	30407

Additional Signature may be generated within this form by selecting the Add button. Add

Application Data Sheet 37 CFR 1.76	Attorney Docket Number	DEJ10730P00071US
	Application Number	
Title of Invention	APPARATUS WITH WEIGHT RESPONSIVE CHANGEABLE ADJUSTING CHARACTERISTICS	

This collection of information is required by 37 CFR 1.76. The information is required to obtain or retain a benefit by the public which is to file (and by the USPTO to process) an application. Confidentiality is governed by 35 U.S.C. 122 and 37 CFR 1.14. This collection is estimated to take 23 minutes to complete, including gathering, preparing, and submitting the completed application data sheet form to the USPTO. Time will vary depending upon the individual case. Any comments on the amount of time you require to complete this form and/or suggestions for reducing this burden, should be sent to the Chief Information Officer, U.S. Patent and Trademark Office, U.S. Department of Commerce, P.O. Box 1450, Alexandria, VA 22313-1450. DO NOT SEND FEES OR COMPLETED FORMS TO THIS ADDRESS. **SEND TO: Commissioner for Patents, P.O. Box 1450, Alexandria, VA 22313-1450.**

Privacy Act Statement

The Privacy Act of 1974 (P.L. 93-579) requires that you be given certain information in connection with your submission of the attached form related to a patent application or patent. Accordingly, pursuant to the requirements of the Act, please be advised that: (1) the general authority for the collection of this information is 35 U.S.C. 2(b)(2); (2) furnishing of the information solicited is voluntary; and (3) the principal purpose for which the information is used by the U.S. Patent and Trademark Office is to process and/or examine your submission related to a patent application or patent. If you do not furnish the requested information, the U.S. Patent and Trademark Office may not be able to process and/or examine your submission, which may result in termination of proceedings or abandonment of the application or expiration of the patent.

The information provided by you in this form will be subject to the following routine uses:

1 The information on this form will be treated confidentially to the extent allowed under the Freedom of Information Act (5 U.S.C. 552) and the Privacy Act (5 U.S.C. 552a). Records from this system of records may be disclosed to the Department of Justice to determine whether the Freedom of Information Act requires disclosure of these records.

2. A record from this system of records may be disclosed, as a routine use, in the course of presenting evidence to a court, magistrate, or administrative tribunal, including disclosures to opposing counsel in the course of settlement negotiations.

3 A record in this system of records may be disclosed, as a routine use, to a Member of Congress submitting a request involving an individual, to whom the record pertains, when the individual has requested assistance from the Member with respect to the subject matter of the record.

4. A record in this system of records may be disclosed, as a routine use, to a contractor of the Agency having need for the information in order to perform a contract. Recipients of information shall be required to comply with the requirements of the Privacy Act of 1974, as amended, pursuant to 5 U.S.C. 552a(m).

5. A record related to an International Application filed under the Patent Cooperation Treaty in this system of records may be disclosed, as a routine use, to the International Bureau of the World Intellectual Property Organization, pursuant to the Patent CooperationTreaty.

6. A record in this system of records may be disclosed, as a routine use, to another federal agency for purposes of National Security review (35 U.S.C. 181) and for review pursuant to the Atomic Energy Act (42 U.S.C. 218(c)).

7. A record from this system of records may be disclosed, as a routine use, to the Administrator, General Services, or his/her designee, during an inspection of records conducted by GSA as part of that agency's responsibility to recommend improvements in records management practices and programs, under authority of 44 U.S.C. 2904 and 2906. Such disclosure shall be made in accordance with the GSA regulations governing inspection of records for this purpose, and any other relevant (i.e., GSA or Commerce) directive. Such disclosure shall not be used to make determinations about individuals.

8. A record from this system of records may be disclosed, as a routine use, to the public after either publication of the application pursuant to 35 U.S.C. 122(b) or issuance of a patent pursuant to 35 U.S.C. 151. Further, a record may be disclosed, subject to the limitations of 37 CFR 1.14, as a routine use, to the public if the record was filed in an application which became abandoned or in which the proceedings were terminated and which application is referenced by either a published application, an application open to public inspections or an issued patent.

9. A record from this system of records may be disclosed, as a routine use, to a Federal, State, or local law enforcement agency, if the USPTO becomes aware of a violation or potential violation of law or regulation.

Electronic Patent Application Fee Transmittal

Application Number:	
Filing Date:	
Title of Invention:	APPARATUS WITH WEIGHT RESPONSIVE CHANGEABLE ADJUSTING CHARACTERISTICS
First Named Inventor/Applicant Name:	Aaron DeJule
Filer:	John Stirling Mortimer/Linda Bowen
Attorney Docket Number:	DEJ10730P00071US

Filed as Small Entity

Filing Fees for Utility under 35 USC 111(a)

Description	Fee Code	Quantity	Amount	Sub-Total in USD($)
Basic Filing:				
Utility filing Fee (Electronic filing)	4011	1	70	70
Utility Search Fee	2111	1	300	300
Utility Examination Fee	2311	1	360	360
Pages:				
Claims:				
Miscellaneous-Filing:				
Late Filing Fee for Oath or Declaration	2051	1	70	70
Petition:				

Description	Fee Code	Quantity	Amount	Sub-Total in USD($)
Patent-Appeals-and-Interference:				
Post-Allowance-and-Post-Issuance:				
Extension-of-Time:				
Miscellaneous:				
			Total in USD ($)	**800**

Electronic Acknowledgement Receipt	
EFS ID:	24882369
Application Number:	15040735
International Application Number:	
Confirmation Number:	1083
Title of Invention:	APPARATUS WITH WEIGHT RESPONSIVE CHANGEABLE ADJUSTING CHARACTERISTICS
First Named Inventor/Applicant Name:	Aaron DeJule
Customer Number:	32116
Filer:	John Stirling Mortimer/Linda Bowen
Filer Authorized By:	John Stirling Mortimer
Attorney Docket Number:	DEJ10730P00071US
Receipt Date:	10-FEB-2016
Filing Date:	
Time Stamp:	17:24:50
Application Type:	Utility under 35 USC 111(a)

Payment information:

Submitted with Payment	yes
Payment Type	Credit Card
Payment was successfully received in RAM	$800
RAM confirmation Number	4124
Deposit Account	
Authorized User	
The Director of the USPTO is hereby authorized to charge indicated fees and credit any overpayment as follows:	

File Listing:

Document Number	Document Description	File Name	File Size(Bytes)/ Message Digest	Multi Part /.zip	Pages (if appl.)
1	Transmittal of New Application	10730P00071_Transmittal.pdf	111699 bdaa5ef547924daf491f074a9b55b9fbeba2f9f1	no	1
Warnings:					
Information:					
2	Fee Worksheet (SB06)	10730P00071_Fee_Transmittal.pdf	106937 2c2c24a28cb38afbbbe797d3027f361b1ce60435	no	1
Warnings:					
Information:					
3		10730P00071_Specification.pdf	1731260 d9c64debcb0c3d025254594baca146d1b21c0140	yes	32
	Multipart Description/PDF files in .zip description				
	Document Description		**Start**	**End**	
	Specification		1	26	
	Claims		27	31	
	Abstract		32	32	
Warnings:					
Information:					
4	Drawings-only black and white line drawings	10730P00071_Drawings.pdf	294138 2c895857d981c4dc83429993c27f39e4ffbdc3ab	no	6
Warnings:					
Information:					
5	Application Data Sheet	10730P00071US-App_Data.PDF	1823076 02ca9a9ae32d44942b146e2aed618fa18a12150b	no	9
Warnings:					
Information:					
6	Fee Worksheet (SB06)	fee-info.pdf	36971 0289e23f308917c306de0d3b082d0f884b7bcbb8	no	2

Warnings:	
Information:	
Total Files Size (in bytes):	4104081

This Acknowledgement Receipt evidences receipt on the noted date by the USPTO of the indicated documents, characterized by the applicant, and including page counts, where applicable. It serves as evidence of receipt similar to a Post Card, as described in MPEP 503.

New Applications Under 35 U.S.C. 111
If a new application is being filed and the application includes the necessary components for a filing date (see 37 CFR 1.53(b)-(d) and MPEP 506), a Filing Receipt (37 CFR 1.54) will be issued in due course and the date shown on this Acknowledgement Receipt will establish the filing date of the application.

National Stage of an International Application under 35 U.S.C. 371
If a timely submission to enter the national stage of an international application is compliant with the conditions of 35 U.S.C. 371 and other applicable requirements a Form PCT/DO/EO/903 indicating acceptance of the application as a national stage submission under 35 U.S.C. 371 will be issued in addition to the Filing Receipt, in due course.

New International Application Filed with the USPTO as a Receiving Office
If a new international application is being filed and the international application includes the necessary components for an international filing date (see PCT Article 11 and MPEP 1810), a Notification of the International Application Number and of the International Filing Date (Form PCT/RO/105) will be issued in due course, subject to prescriptions concerning national security, and the date shown on this Acknowledgement Receipt will establish the international filing date of the application.

UNITED STATES PATENT AND TRADEMARK OFFICE

UNITED STATES DEPARTMENT OF COMMERCE
United States Patent and Trademark Office
Address: COMMISSIONER FOR PATENTS
P.O. Box 1450
Alexandria, Virginia 22313-1450
www.uspto.gov

APPLICATION NUMBER	FILING or 371(c) DATE	GRP ART UNIT	FIL FEE REC'D	ATTY.DOCKET.NO	TOT CLAIMS	IND CLAIMS
15/040,735	02/10/2016	3636	800	DEJ10730P00071US	20	1

CONFIRMATION NO. 1083

FILING RECEIPT

32116
WOOD, PHILLIPS, KATZ, CLARK & MORTIMER
500 W. MADISON STREET
SUITE 1130
CHICAGO, IL 60661

Date Mailed: 03/01/2016

Receipt is acknowledged of this non-provisional patent application. The application will be taken up for examination in due course. Applicant will be notified as to the results of the examination. Any correspondence concerning the application must include the following identification information: the U.S. APPLICATION NUMBER, FILING DATE, NAME OF APPLICANT, and TITLE OF INVENTION. Fees transmitted by check or draft are subject to collection. Please verify the accuracy of the data presented on this receipt. **If an error is noted on this Filing Receipt, please submit a written request for a Filing Receipt Correction. Please provide a copy of this Filing Receipt with the changes noted thereon. If you received a "Notice to File Missing Parts" for this application, please submit any corrections to this Filing Receipt with your reply to the Notice. When the USPTO processes the reply to the Notice, the USPTO will generate another Filing Receipt incorporating the requested corrections**

Inventor(s)

Aaron DeJule, River Forest, IL;
Scott Padiak, Glance, IL;
Paul C. Evans, Bellaire, MI;

Applicant(s)

Aaron DeJule, River Forest, IL;
Scott Padiak, Glance, IL;
Paul C. Evans, Bellaire, MI;

Power of Attorney: None

Domestic Priority data as claimed by applicant

This appln claims benefit of 62/114,706 02/11/2015

Foreign Applications for which priority is claimed (You may be eligible to benefit from the **Patent Prosecution Highway** program at the USPTO. Please see http://www.uspto.gov for more information.) - None.
Foreign application information must be provided in an Application Data Sheet in order to constitute a claim to foreign priority. See 37 CFR 1.55 and 1.76.

Permission to Access Application via Priority Document Exchange: Yes

Permission to Access Search Results: Yes

Applicant may provide or rescind an authorization for access using Form PTO/SB/39 or Form PTO/SB/69 as appropriate.

If Required, Foreign Filing License Granted: 02/25/2016

The country code and number of your priority application, to be used for filing abroad under the Paris Convention, is **US 15/040,735**

Projected Publication Date: 08/11/2016

Non-Publication Request: No

Early Publication Request: No
**** SMALL ENTITY ****
Title

APPARATUS WITH WEIGHT RESPONSIVE CHANGEABLE ADJUSTING CHARACTERISTICS

Preliminary Class

297

Statement under 37 CFR 1.55 or 1.78 for AIA (First Inventor to File) Transition Applications: No

PROTECTING YOUR INVENTION OUTSIDE THE UNITED STATES

Since the rights granted by a U.S. patent extend only throughout the territory of the United States and have no effect in a foreign country, an inventor who wishes patent protection in another country must apply for a patent in a specific country or in regional patent offices. Applicants may wish to consider the filing of an international application under the Patent Cooperation Treaty (PCT). An international (PCT) application generally has the same effect as a regular national patent application in each PCT-member country. The PCT process **simplifies** the filing of patent applications on the same invention in member countries, but **does not result** in a grant of "an international patent" and does not eliminate the need of applicants to file additional documents and fees in countries where patent protection is desired.

Almost every country has its own patent law, and a person desiring a patent in a particular country must make an application for patent in that country in accordance with its particular laws. Since the laws of many countries differ in various respects from the patent law of the United States, applicants are advised to seek guidance from specific foreign countries to ensure that patent rights are not lost prematurely.

Applicants also are advised that in the case of inventions made in the United States, the Director of the USPTO must issue a license before applicants can apply for a patent in a foreign country. The filing of a U.S. patent application serves as a request for a foreign filing license. The application's filing receipt contains further information and guidance as to the status of applicant's license for foreign filing.

Applicants may wish to consult the USPTO booklet, "General Information Concerning Patents" (specifically, the section entitled "Treaties and Foreign Patents") for more information on timeframes and deadlines for filing foreign patent applications. The guide is available either by contacting the USPTO Contact Center at 800-786-9199, or it can be viewed on the USPTO website at http://www.uspto.gov/web/offices/pac/doc/general/index.html.

For information on preventing theft of your intellectual property (patents, trademarks and copyrights), you may wish to consult the U.S. Government website, http://www.stopfakes.gov. Part of a Department of Commerce initiative, this website includes self-help "toolkits" giving innovators guidance on how to protect intellectual property in specific countries such as China, Korea and Mexico. For questions regarding patent enforcement issues, applicants may call the U.S. Government hotline at 1-866-999-HALT (1-866-999-4258).

LICENSE FOR FOREIGN FILING UNDER

Title 35, United States Code, Section 184

Title 37, Code of Federal Regulations, 5.11 & 5.15

GRANTED

The applicant has been granted a license under 35 U.S.C. 184, if the phrase "IF REQUIRED, FOREIGN FILING LICENSE GRANTED" followed by a date appears on this form. Such licenses are issued in all applications where the conditions for issuance of a license have been met, regardless of whether or not a license may be required as set forth in 37 CFR 5.15. The scope and limitations of this license are set forth in 37 CFR 5.15(a) unless an earlier license has been issued under 37 CFR 5.15(b). The license is subject to revocation upon written notification. The date indicated is the effective date of the license, unless an earlier license of similar scope has been granted under 37 CFR 5.13 or 5.14.

This license is to be retained by the licensee and may be used at any time on or after the effective date thereof unless it is revoked. This license is automatically transferred to any related applications(s) filed under 37 CFR 1.53(d). This license is not retroactive.

The grant of a license does not in any way lessen the responsibility of a licensee for the security of the subject matter as imposed by any Government contract or the provisions of existing laws relating to espionage and the national security or the export of technical data. Licensees should apprise themselves of current regulations especially with respect to certain countries, of other agencies, particularly the Office of Defense Trade Controls, Department of State (with respect to Arms, Munitions and Implements of War (22 CFR 121-128)); the Bureau of Industry and Security, Department of Commerce (15 CFR parts 730-774); the Office of Foreign AssetsControl, Department of Treasury (31 CFR Parts 500+) and the Department of Energy.

NOT GRANTED

No license under 35 U.S.C. 184 has been granted at this time, if the phrase "IF REQUIRED, FOREIGN FILING LICENSE GRANTED" DOES NOT appear on this form. Applicant may still petition for a license under 37 CFR 5.12, if a license is desired before the expiration of 6 months from the filing date of the application. If 6 months has lapsed from the filing date of this application and the licensee has not received any indication of a secrecy order under 35 U.S.C. 181, the licensee may foreign file the application pursuant to 37 CFR 5.15(b).

SelectUSA

The United States represents the largest, most dynamic marketplace in the world and is an unparalleled location for business investment, innovation, and commercialization of new technologies. The U.S. offers tremendous resources and advantages for those who invest and manufacture goods here. Through SelectUSA, our nation works to promote and facilitate business investment. SelectUSA provides information assistance to the international investor community; serves as an ombudsman for existing and potential investors; advocates on behalf of U.S. cities, states, and regions competing for global investment; and counsels U.S. economic development organizations on investment attraction best practices. To learn more about why the United States is the best country in the world to develop technology, manufacture products, deliver services, and grow your business, visit http://www.SelectUSA.gov or call +1-202-482-6800.

PATENT APPLICATION FEE DETERMINATION RECORD

Substitute for Form PTO-875

Application or Docket Number
15/040,735

APPLICATION AS FILED - PART I

FOR	(Column 1) NUMBER FILED	(Column 2) NUMBER EXTRA	SMALL ENTITY RATE($)	SMALL ENTITY FEE($)	OR	OTHER THAN SMALL ENTITY RATE($)	OTHER THAN SMALL ENTITY FEE($)
BASIC FEE (37 CFR 1.16(a), (b), or (c))	N/A	N/A	N/A	70		N/A	
SEARCH FEE (37 CFR 1.16(k), (i), or (m))	N/A	N/A	N/A	300		N/A	
EXAMINATION FEE (37 CFR 1.16(o), (p), or (q))	N/A	N/A	N/A	360		N/A	
TOTAL CLAIMS (37 CFR 1.16(i))	20 minus 20 =	*	x 40 =	0.00	OR		
INDEPENDENT CLAIMS (37 CFR 1.16(h))	1 minus 3 =	*	x 210 =	0.00			
APPLICATION SIZE FEE (37 CFR 1.16(s))	If the specification and drawings exceed 100 sheets of paper, the application size fee due is $310 ($155 for small entity) for each additional 50 sheets or fraction thereof. See 35 U.S.C. 41(a)(1)(G) and 37 CFR 1.16(s).			0.00			
MULTIPLE DEPENDENT CLAIM PRESENT (37 CFR 1.16(j))				0.00			
* If the difference in column 1 is less than zero, enter "0" in column 2.			TOTAL	730		TOTAL	

APPLICATION AS AMENDED - PART II

		(Column 1) CLAIMS REMAINING AFTER AMENDMENT		(Column 2) HIGHEST NUMBER PREVIOUSLY PAID FOR	(Column 3) PRESENT EXTRA	SMALL ENTITY RATE($)	SMALL ENTITY ADDITIONAL FEE($)	OR	OTHER THAN SMALL ENTITY RATE($)	OTHER THAN SMALL ENTITY ADDITIONAL FEE($)
AMENDMENT A	Total (37 CFR 1.16(i))	*	Minus	**	=	x =		OR	x =	
AMENDMENT A	Independent (37 CFR 1.16(h))	*	Minus	***	=	x =		OR	x =	
AMENDMENT A	Application Size Fee (37 CFR 1.16(s))									
AMENDMENT A	FIRST PRESENTATION OF MULTIPLE DEPENDENT CLAIM (37 CFR 1.16(j))							OR		
						TOTAL ADD'L FEE		OR	TOTAL ADD'L FEE	

		(Column 1) CLAIMS REMAINING AFTER AMENDMENT		(Column 2) HIGHEST NUMBER PREVIOUSLY PAID FOR	(Column 3) PRESENT EXTRA	RATE($)	ADDITIONAL FEE($)	OR	RATE($)	ADDITIONAL FEE($)
AMENDMENT B	Total (37 CFR 1.16(i))	*	Minus	**	=	x =		OR	x =	
AMENDMENT B	Independent (37 CFR 1.16(h))	*	Minus	***	=	x =		OR	x =	
AMENDMENT B	Application Size Fee (37 CFR 1.16(s))									
AMENDMENT B	FIRST PRESENTATION OF MULTIPLE DEPENDENT CLAIM (37 CFR 1.16(j))							OR		
						TOTAL ADD'L FEE		OR	TOTAL ADD'L FEE	

* If the entry in column 1 is less than the entry in column 2, write "0" in column 3.
** If the "Highest Number Previously Paid For" IN THIS SPACE is less than 20, enter "20".
*** If the "Highest Number Previously Paid For" IN THIS SPACE is less than 3, enter "3".
The "Highest Number Previously Paid For" (Total or Independent) is the highest found in the appropriate box in column 1.

UNITED STATES PATENT AND TRADEMARK OFFICE

UNITED STATES DEPARTMENT OF COMMERCE
United States Patent and Trademark Office
Address: COMMISSIONER FOR PATENTS
P.O. Box 1450
Alexandria, Virginia 22313-1450
www.uspto.gov

APPLICATION NUMBER	FILING OR 371(C) DATE	FIRST NAMED APPLICANT	ATTY. DOCKET NO./TITLE
15/040,735	02/10/2016	Aaron DeJule	DEJ10730P00071US

CONFIRMATION NO. 1083

32116
WOOD, PHILLIPS, KATZ, CLARK & MORTIMER
500 W. MADISON STREET
SUITE 1130
CHICAGO, IL 60661

INFORMAL NOTICE

OC000000080942664

Date Mailed: 03/01/2016

INFORMATIONAL NOTICE TO APPLICANT

Applicant is notified that the above-identified application contains the deficiencies noted below. No period for reply is set forth in this notice for correction of these deficiencies. However, if a deficiency relates to the inventor's oath or declaration, the applicant must file an oath or declaration in compliance with 37 CFR 1.63, or a substitute statement in compliance with 37 CFR 1.64, executed by or with respect to each actual inventor no later than the expiration of the time period set in the "Notice of Allowability" to avoid abandonment. See 37 CFR 1.53(f).

The item(s) indicated below are also required and should be submitted with any reply to this notice to avoid further processing delays.

- A properly executed inventor's oath or declaration has not been received for the following inventor(s):
  Aaron DeJule
  Scott Padiak
  Paul C. Evans

Questions about the contents of this notice and the requirements it sets forth should be directed to the Office of Data Management, Application Assistance Unit, at **(571) 272-4000** or **(571) 272-4200** or **1-888-786-0101**.

/hachristian/

UNITED STATES PATENT AND TRADEMARK OFFICE

UNITED STATES DEPARTMENT OF COMMERCE
United States Patent and Trademark Office
Address: COMMISSIONER FOR PATENTS
P.O. Box 1450
Alexandria, Virginia 22313-1450
www.uspto.gov

APPLICATION NUMBER	FILING OR 371(C) DATE	FIRST NAMED APPLICANT	ATTY. DOCKET NO./TITLE
15/040,735	02/10/2016	Aaron DeJule	DEJ10730P00071US

CONFIRMATION NO. 1083

32116
WOOD, PHILLIPS, KATZ, CLARK & MORTIMER
500 W. MADISON STREET
SUITE 1130
CHICAGO, IL 60661

PUBLICATION NOTICE

OC000000085019865

Title:APPARATUS WITH WEIGHT RESPONSIVE CHANGEABLE ADJUSTING CHARACTERISTICS

Publication No.US-2016-0227935-A1
Publication Date:08/11/2016

NOTICE OF PUBLICATION OF APPLICATION

The above-identified application will be electronically published as a patent application publication pursuant to 37 CFR 1.211, et seq. The patent application publication number and publication date are set forth above.

The publication may be accessed through the USPTO's publically available Searchable Databases via the Internet at www.uspto.gov. The direct link to access the publication is currently http://www.uspto.gov/patft/.

The publication process established by the Office does not provide for mailing a copy of the publication to applicant. A copy of the publication may be obtained from the Office upon payment of the appropriate fee set forth in 37 CFR 1.19(a)(1). Orders for copies of patent application publications are handled by the USPTO's Office of Public Records. The Office of Public Records can be reached by telephone at (703) 308-9726 or (800) 972-6382, by facsimile at (703) 305-8759, by mail addressed to the United States Patent and Trademark Office, Office of Public Records, Alexandria, VA 22313-1450 or via the Internet.

In addition, information on the status of the application, including the mailing date of Office actions and the dates of receipt of correspondence filed in the Office, may also be accessed via the Internet through the Patent Electronic Business Center at www.uspto.gov using the public side of the Patent Application Information and Retrieval (PAIR) system. The direct link to access this status information is currently http://pair.uspto.gov/. Prior to publication, such status information is confidential and may only be obtained by applicant using the private side of PAIR.

Further assistance in electronically accessing the publication, or about PAIR, is available by calling the Patent Electronic Business Center at 1-866-217-9197.

Office of Data Managment, Application Assistance Unit (571) 272-4000, or (571) 272-4200, or 1-888-786-0101

IN THE UNITED STATES PATENT AND TRADEMARK OFFICE

In re Application of:	)	APPARATUS WITH WEIGHT RESPONSIVE CHANGEABLE ADJUSTING CHARACTERISTICS
AARON DeJULE et al.	)	
	)	Examiner:
Serial No. 15/040,735	)	Group Art Unit 3636
Filed: February 10, 2016	)	Confirmation No. 1083

RESPONSE TO INFORMATIONAL NOTICE TO APPLICANT

Commissioner for Patents
P.O. Box 1450
Alexandria, VA 22313-1450

Sir:

In response to the Informational Notice to Applicant dated March 1, 2016, enclosed herewith are Declarations executed by the inventors.

The fee for late submission of the Declarations was previously paid on February 10, 2016. Therefore, no fee will be paid with this submission.

Respectfully submitted,
WOOD, PHILLIPS, KATZ,
CLARK & MORTIMER

By _____
John S. Mortimer
Reg. No. 30,407

Dated: Nov 16, 2017

500 West Madison Street
Suite 1130
Chicago, IL 60661
(312) 876-2113

PTO/AIA/01 (06-12)
Approved for use through 01/31/2014. OMB 0651-0032
U.S. Patent and Trademark Office; U.S. DEPARTMENT OF COMMERCE
Under the Paperwork Reduction Act of 1995, no persons are required to respond to a collection of information unless it displays a valid OMB control number.

DECLARATION (37 CFR 1.63) FOR UTILITY OR DESIGN APPLICATION USING AN APPLICATION DATA SHEET (37 CFR 1.76)

Title of Invention	APPARATUS WITH WEIGHT RESPONSIVE CHANGEABLE ADJUSTING CHARACTERISTICS

As the below named inventor, I hereby declare that:

This declaration is directed to:

☐ The attached application, or

☒ United States application or PCT international application number 15/040,735

filed on February 10, 2016.

The above-identified application was made or authorized to be made by me.

I believe that I am the original inventor or an original joint inventor of a claimed invention in the application.

I hereby acknowledge that any willful false statement made in this declaration is punishable under 18 U.S.C. 1001 by fine or imprisonment of not more than five (5) years, or both.

WARNING:

Petitioner/applicant is cautioned to avoid submitting personal information in documents filed in a patent application that may contribute to identity theft. Personal information such as social security numbers, bank account numbers, or credit card numbers (other than a check or credit card authorization form PTO-2038 submitted for payment purposes) is never required by the USPTO to support a petition or an application. If this type of personal information is included in documents submitted to the USPTO, petitioners/applicants should consider redacting such personal information from the documents before submitting them to the USPTO. Petitioner/applicant is advised that the record of a patent application is available to the public after publication of the application (unless a non-publication request in compliance with 37 CFR 1.213(a) is made in the application) or issuance of a patent. Furthermore, the record from an abandoned application may also be available to the public if the application is referenced in a published application or an issued patent (see 37 CFR 1.14). Checks and credit card authorization forms PTO-2038 submitted for payment purposes are not retained in the application file and therefore are not publicly available.

LEGAL NAME OF INVENTOR

Inventor: Aaron DeJule Date (Optional): _____

Signature: _____

Note: An application data sheet (PTO/SB/14 or equivalent), including naming the entire inventive entity, must accompany this form or must have been previously filed. Use an additional PTO/AIA/01 form for each additional inventor.

This collection of information is required by 35 U.S.C. 115 and 37 CFR 1.63. The information is required to obtain or retain a benefit by the public which is to file (and by the USPTO to process) an application. Confidentiality is governed by 35 U.S.C. 122 and 37 CFR 1.11 and 1.14. This collection is estimated to take 1 minute to complete, including gathering, preparing, and submitting the completed application form to the USPTO. Time will vary depending upon the individual case. Any comments on the amount of time you require to complete this form and/or suggestions for reducing this burden, should be sent to the Chief Information Officer, U.S. Patent and Trademark Office, U.S. Department of Commerce, P.O. Box 1450, Alexandria, VA 22313-1450. DO NOT SEND FEES OR COMPLETED FORMS TO THIS ADDRESS. **SEND TO: Commissioner for Patents, P.O. Box 1450, Alexandria, VA 22313-1450.**

If you need assistance in completing the form, call 1-800-PTO-9199 and select option 2.

PTO/AIA/01 (06-12)
Approved for use through 01/31/2014. OMB 0651-0032
U.S. Patent and Trademark Office, U.S. DEPARTMENT OF COMMERCE
Under the Paperwork Reduction Act of 1995, no persons are required to respond to a collection of information unless it displays a valid OMB control number

DECLARATION (37 CFR 1.63) FOR UTILITY OR DESIGN APPLICATION USING AN APPLICATION DATA SHEET (37 CFR 1.76)

Title of Invention	APPARATUS WITH WEIGHT RESPONSIVE CHANGEABLE ADJUSTING CHARACTERISTICS

As the below named inventor, I hereby declare that:

This declaration is directed to:

☐ The attached application, or

☒ United States application or PCT international application number 15/040,735 filed on February 10, 2016

The above-identified application was made or authorized to be made by me.

I believe that I am the original inventor or an original joint inventor of a claimed invention in the application.

I hereby acknowledge that any willful false statement made in this declaration is punishable under 18 U.S.C. 1001 by fine or imprisonment of not more than five (5) years, or both.

WARNING:

Petitioner/applicant is cautioned to avoid submitting personal information in documents filed in a patent application that may contribute to identity theft. Personal information such as social security numbers, bank account numbers, or credit card numbers (other than a check or credit card authorization form PTO-2038 submitted for payment purposes) is never required by the USPTO to support a petition or an application. If this type of personal information is included in documents submitted to the USPTO, petitioners/applicants should consider redacting such personal information from the documents before submitting them to the USPTO. Petitioner/applicant is advised that the record of a patent application is available to the public after publication of the application (unless a non-publication request in compliance with 37 CFR 1.213(a) is made in the application) or issuance of a patent. Furthermore, the record from an abandoned application may also be available to the public if the application is referenced in a published application or an issued patent (see 37 CFR 1.14). Checks and credit card authorization forms PTO-2038 submitted for payment purposes are not retained in the application file and therefore are not publicly available.

LEGAL NAME OF INVENTOR

Inventor: Scott Padiak Date (Optional) _____

Signature: _____

Note: An application data sheet (PTO/SB/14 or equivalent), including naming the entire inventive entity, must accompany this form or must have been previously filed. Use an additional PTO/AIA/01 form for each additional inventor.

This collection of information is required by 35 U.S.C. 115 and 37 CFR 1.63. The information is required to obtain or retain a benefit by the public which is to file (and by the USPTO to process) an application. Confidentiality is governed by 35 U.S.C. 122 and 37 CFR 1.11 and 1.14. This collection is estimated to take 1 minute to complete, including gathering, preparing, and submitting the completed application form to the USPTO. Time will vary depending upon the individual case. Any comments on the amount of time you require to complete this form and/or suggestions for reducing this burden, should be sent to the Chief Information Officer, U.S. Patent and Trademark Office, U.S. Department of Commerce, P.O. Box 1450, Alexandria, VA 22313-1450. DO NOT SEND FEES OR COMPLETED FORMS TO THIS ADDRESS. **SEND TO: Commissioner for Patents, P.O. Box 1450, Alexandria, VA 22313-1450.**

If you need assistance in completing the form, call 1-800-PTO-9199 and select option 2

PTO/AIA/01 (06-12)
Approved for use through 01/31/2014. OMB 0651-0032
U.S. Patent and Trademark Office; U.S. DEPARTMENT OF COMMERCE
Under the Paperwork Reduction Act of 1995, no persons are required to respond to a collection of information unless it displays a valid OMB control number.

DECLARATION (37 CFR 1.63) FOR UTILITY OR DESIGN APPLICATION USING AN APPLICATION DATA SHEET (37 CFR 1.76)

Title of Invention	APPARATUS WITH WEIGHT RESPONSIVE CHANGEABLE ADJUSTING CHARACTERISTICS

As the below named inventor, I hereby declare that:

This declaration is directed to:

☐ The attached application, or

☒ United States application or PCT international application number 15/040,735 filed on February 10, 2016.

The above-identified application was made or authorized to be made by me.

I believe that I am the original inventor or an original joint inventor of a claimed invention in the application.

I hereby acknowledge that any willful false statement made in this declaration is punishable under 18 U.S.C. 1001 by fine or imprisonment of not more than five (5) years, or both.

WARNING:

Petitioner/applicant is cautioned to avoid submitting personal information in documents filed in a patent application that may contribute to identity theft. Personal information such as social security numbers, bank account numbers, or credit card numbers (other than a check or credit card authorization form PTO-2038 submitted for payment purposes) is never required by the USPTO to support a petition or an application. If this type of personal information is included in documents submitted to the USPTO, petitioners/applicants should consider redacting such personal information from the documents before submitting them to the USPTO. Petitioner/applicant is advised that the record of a patent application is available to the public after publication of the application (unless a non-publication request in compliance with 37 CFR 1.213(a) is made in the application) or issuance of a patent. Furthermore, the record from an abandoned application may also be available to the public if the application is referenced in a published application or an issued patent (see 37 CFR 1.14). Checks and credit card authorization forms PTO-2038 submitted for payment purposes are not retained in the application file and therefore are not publicly available.

LEGAL NAME OF INVENTOR

Inventor: Paul C. Evans Date (Optional): _____

Signature: _____

Note: An application data sheet (PTO/SB/14 or equivalent), including naming the entire inventive entity, must accompany this form or must have been previously filed. Use an additional PTO/AIA/01 form for each additional inventor.

This collection of information is required by 35 U.S.C. 115 and 37 CFR 1.63. The information is required to obtain or retain a benefit by the public which is to file (and by the USPTO to process) an application. Confidentiality is governed by 35 U.S.C. 122 and 37 CFR 1.11 and 1.14. This collection is estimated to take 1 minute to complete, including gathering, preparing, and submitting the completed application form to the USPTO. Time will vary depending upon the individual case. Any comments on the amount of time you require to complete this form and/or suggestions for reducing this burden, should be sent to the Chief Information Officer, U.S. Patent and Trademark Office, U.S. Department of Commerce, P.O. Box 1450, Alexandria, VA 22313-1450. DO NOT SEND FEES OR COMPLETED FORMS TO THIS ADDRESS. **SEND TO: Commissioner for Patents, P.O. Box 1450, Alexandria, VA 22313-1450.**

If you need assistance in completing the form, call 1-800-PTO-9199 and select option 2.

Electronic Acknowledgement Receipt

EFS ID:	30967806
Application Number:	15040735
International Application Number:	
Confirmation Number:	1083
Title of Invention:	APPARATUS WITH WEIGHT RESPONSIVE CHANGEABLE ADJUSTING CHARACTERISTICS
First Named Inventor/Applicant Name:	Aaron DeJule
Customer Number:	32116
Filer:	John Stirling Mortimer/Linda Bowen
Filer Authorized By:	John Stirling Mortimer
Attorney Docket Number:	DEJ10730P00071US
Receipt Date:	16-NOV-2017
Filing Date:	10-FEB-2016
Time Stamp:	11:17:13
Application Type:	Utility under 35 USC 111(a)

Payment information:

Submitted with Payment	no

File Listing:

Document Number	Document Description	File Name	File Size(Bytes)/ Message Digest	Multi Part /.zip	Pages (if appl.)
1		15040735_Response_Decl.pdf	342743 3411797dae557938af8cbbfc65008bec39743ccd	yes	4

	Multipart Description/PDF files in .zip description		
	Document Description	**Start**	**End**
	Applicant Response to Pre-Exam Formalities Notice	1	1
	Oath or Declaration filed	2	2
	Oath or Declaration filed	3	3
	Oath or Declaration filed	4	4
Warnings:			
Information:			
	Total Files Size (in bytes):	342743	

This Acknowledgement Receipt evidences receipt on the noted date by the USPTO of the indicated documents, characterized by the applicant, and including page counts, where applicable. It serves as evidence of receipt similar to a Post Card, as described in MPEP 503.

<u>New Applications Under 35 U.S.C. 111</u>
If a new application is being filed and the application includes the necessary components for a filing date (see 37 CFR 1.53(b)-(d) and MPEP 506), a Filing Receipt (37 CFR 1.54) will be issued in due course and the date shown on this Acknowledgement Receipt will establish the filing date of the application.
<u>National Stage of an International Application under 35 U.S.C. 371</u>
If a timely submission to enter the national stage of an international application is compliant with the conditions of 35 U.S.C. 371 and other applicable requirements a Form PCT/DO/EO/903 indicating acceptance of the application as a national stage submission under 35 U.S.C. 371 will be issued in addition to the Filing Receipt, in due course.
<u>New International Application Filed with the USPTO as a Receiving Office</u>
If a new international application is being filed and the international application includes the necessary components for an international filing date (see PCT Article 11 and MPEP 1810), a Notification of the International Application Number and of the International Filing Date (Form PCT/RO/105) will be issued in due course, subject to prescriptions concerning national security, and the date shown on this Acknowledgement Receipt will establish the international filing date of the application.

UNITED STATES PATENT AND TRADEMARK OFFICE

UNITED STATES DEPARTMENT OF COMMERCE
United States Patent and Trademark Office
Address: COMMISSIONER FOR PATENTS
P.O. Box 1450
Alexandria, Virginia 22313-1450
www.uspto.gov

APPLICATION NO.	FILING DATE	FIRST NAMED INVENTOR	ATTORNEY DOCKET NO.	CONFIRMATION NO.
15/040,735	02/10/2016	Aaron DeJule	DEJ10730P00071US	1083

32116 7590 01/17/2018
WOOD, PHILLIPS, KATZ, CLARK & MORTIMER
500 W. MADISON STREET
SUITE 1130
CHICAGO, ILLINOIS 60661

EXAMINER
BRINDLEY, TIMOTHY J

ART UNIT	PAPER NUMBER
3636	

NOTIFICATION DATE	DELIVERY MODE
01/17/2018	ELECTRONIC

Please find below and/or attached an Office communication concerning this application or proceeding.

The time period for reply, if any, is set in the attached communication.

Notice of the Office communication was sent electronically on above-indicated "Notification Date" to the following e-mail address(es):

docketing@woodphillips.com

PTOL-90A (Rev. 04/07)

Office Action Summary	Application No. 15/040,735	Applicant(s) DeJule et al.	
	Examiner TIMOTHY J BRINDLEY	Art Unit 3636	AIA Status Yes

-- The MAILING DATE of this communication appears on the cover sheet with the correspondence address --

Period for Reply

A SHORTENED STATUTORY PERIOD FOR REPLY IS SET TO EXPIRE 2 MONTHS FROM THE MAILING DATE OF THIS COMMUNICATION.

- Extensions of time may be available under the provisions of 37 CFR 1.136(a). In no event, however, may a reply be timely filed after SIX (6) MONTHS from the mailing date of this communication.
- If NO period for reply is specified above, the maximum statutory period will apply and will expire SIX (6) MONTHS from the mailing date of this communication.
- Failure to reply within the set or extended period for reply will, by statute, cause the application to become ABANDONED (35 U.S.C. § 133). Any reply received by the Office later than three months after the mailing date of this communication, even if timely filed, may reduce any earned patent term adjustment. See 37 CFR 1.704(b).

Status

1)☑ Responsive to communication(s) filed on 2/10/16 .

☐ A declaration(s)/affidavit(s) under **37 CFR 1.130(b)** was/were filed on _____ .

2a)☐ This action is **FINAL.** 2b) ☐ This action is non-final.

3)☐ An election was made by the applicant in response to a restriction requirement set forth during the interview on _____; the restriction requirement and election have been incorporated into this action.

4)☐ Since this application is in condition for allowance except for formal matters, prosecution as to the merits is closed in accordance with the practice under *Ex parte Quayle*, 1935 C.D. 11, 453 O.G. 213.

Disposition of Claims*

5) ☑ Claim(s) 1-20 is/are pending in the application.

5a) Of the above claim(s) _____ is/are withdrawn from consideration.

6) ☐ Claim(s) _____ is/are allowed.

7) ☐ Claim(s) _____ is/are rejected.

8) ☐ Claim(s) _____ is/are objected to.

9) ☑ Claim(s) 1-20 are subject to restriction and/or election requirement

* If any claims have been determined allowable, you may be eligible to benefit from the **Patent Prosecution Highway** program at a participating intellectual property office for the corresponding application. For more information, please see http://www.uspto.gov/patents/init_events/pph/index.jsp or send an inquiry to **PPHfeedback@uspto.gov.**

Application Papers

10)☐ The specification is objected to by the Examiner.

11)☐ The drawing(s) filed on _____ is/are: a)☐ accepted or b)☐ objected to by the Examiner.

Applicant may not request that any objection to the drawing(s) be held in abeyance. See 37 CFR 1.85(a).

Replacement drawing sheet(s) including the correction is required if the drawing(s) is objected to. See 37 CFR 1.121(d).

Priority under 35 U.S.C. § 119

12)☐ Acknowledgment is made of a claim for foreign priority under 35 U.S.C. § 119(a)-(d) or (f).

Certified copies:

a)☐ All b)☐ Some** c)☐ None of the:

1.☐ Certified copies of the priority documents have been received.

2.☐ Certified copies of the priority documents have been received in Application No. _____.

3.☐ Copies of the certified copies of the priority documents have been received in this National Stage application from the International Bureau (PCT Rule 17.2(a)).

** See the attached detailed Office action for a list of the certified copies not received.

Attachment(s)

1) ☐ Notice of References Cited (PTO-892)

2) ☐ Information Disclosure Statement(s) (PTO/SB/08a and/or PTO/SB/08b) Paper No(s)/Mail Date _____.

3) ☐ Interview Summary (PTO-413) Paper No(s)/Mail Date _____.

4) ☐ Other: _____.

DETAILED ACTION

Election/Restriction

1. No claim(s) appear generic to the following disclosed patentably distinct species:

Species I: Figs. 3-4;

Species II: Fig. 5;

Species III: Fig. 6;

Species IV: Fig. 7;

Species V: Fig. 8;

Species VI: Fig. 9;

Species VII: Fig. 10;

Species VIII: Fig. 11;

Species IX: Fig. 12;

Species X: Fig. 13;

Species XI: Fig. 14;

Species XII: Fig. 15;

Species XIII: Fig. 16

2. The species are independent or distinct because as disclosed the different species have mutually exclusive characteristics for each identified species. In addition, these species are not obvious variants of each other based on the current record.

Applicant is required under 35 U.S.C. 121 to elect a single disclosed species, or a single grouping of patentably indistinct species, for prosecution on the merits to which the claims shall be restricted if no generic claim is finally held to be allowable.

There is a search and/or examination burden for the patentably distinct species as set forth above because at least the following reason(s) apply:

- *the species or groupings of patentably indistinct species require a different field of search (e.g. searching different classes/subclasses or electronic resources, or employing different search strategies or search queries.)*

Applicant is advised that the reply to this requirement to be complete must include (i) an election of a species or a grouping of patentably indistinct species to be examined even though the requirement may be traversed (37 CFR 1.143) **and (ii) identification of the claims encompassing the elected species** or grouping of patentably indistinct species, including any claims subsequently added. An argument that a claim is allowable or that all claims are generic is considered nonresponsive unless accompanied by an election.

The election may be made with or without traverse. To preserve a right to petition, the election must be made with traverse. If the reply does not distinctly and specifically point out supposed errors in the election of species requirement, the election shall be treated as an election without traverse. Traversal must be presented at the time of election in order to be considered timely. Failure to timely traverse the requirement will result in the loss of right to petition under 37 CFR 1.144. If claims are added after the election, applicant must indicate which of these claims are readable on the elected species or grouping of patentably indistinct species.

Should applicant traverse on the ground that the species, or groupings of patentably indistinct species from which election is required, are not patentably distinct, applicant should submit evidence or identify such evidence now of record showing the species to be obvious variants or clearly admit on the record that this is the case. In either instance, if the examiner finds one of the species unpatentable over the prior art, the evidence or admission may be used in a rejection under 35 U.S.C. 103 or pre-AIA 35 U.S.C. 103(a) of the other species.

Upon the allowance of a generic claim, applicant will be entitled to consideration of claims to additional species which depend from or otherwise require all the limitations of an allowable generic claim as provided by 37 CFR 1.141.

3. Applicant is reminded that upon the cancellation of claims to a non-elected invention, the inventorship must be corrected in compliance with 37 CFR 1.48(a) if one or more of the

currently named inventors is no longer an inventor of at least one claim remaining in the application. A request to correct inventorship under 37 CFR 1.48(a) must be accompanied by an application data sheet in accordance with 37 CFR 1.76 that identifies each inventor by his or her legal name and by the processing fee required under 37 CFR 1.17(i).

Conclusion

4. Any inquiry concerning this communication or earlier communications from the examiner should be directed to TIMOTHY J BRINDLEY whose telephone number is (571)270-7231. The examiner can normally be reached on Mon-Fri, 9am-5pm.

Examiner interviews are available via telephone, in-person, and video conferencing using a USPTO supplied web-based collaboration tool. To schedule an interview, applicant is encouraged to use the USPTO Automated Interview Request (AIR) at http://www.uspto.gov/interviewpractice.

If attempts to reach the examiner by telephone are unsuccessful, the examiner's supervisor, David Dunn can be reached on 5712726670. The fax phone number for the organization where this application or proceeding is assigned is 571-273-8300.

Information regarding the status of an application may be obtained from the Patent Application Information Retrieval (PAIR) system. Status information for published applications may be obtained from either Private PAIR or Public PAIR. Status information for unpublished applications is available through Private PAIR only. For more information about the PAIR system, see http://pair-direct.uspto.gov. Should you have questions on access to the Private PAIR system, contact the Electronic Business Center (EBC) at 866-217-9197 (toll-free). If you would like assistance from a USPTO Customer Service Representative or access to the automated information system, call 800-786-9199 (IN USA OR CANADA) or 571-272-1000.

/TIMOTHY J BRINDLEY/
Primary Examiner, Art Unit 3636

IN THE UNITED STATES PATENT AND TRADEMARK OFFICE

In re Application of:	)	APPARATUS WITH WEIGHT RESPONSIVE CHANGEABLE ADJUSTING CHARACTERISTICS
AARON DEJULE et al.	)	
	)	Examiner: Timothy J. Brindley
Serial No. 15/040,735	)	
	)	Group Art Unit 3636
Filed: February 10, 2016	)	
	)	Confirmation No. 1083

RESPONSE

Commissioner for Patents
P.O. Box 1450
Alexandria, VA 22313-1450

Sir:

This is a response to the Office Action dated January 17, 2018, in which an election requirement has been made.

Applicant elects to prosecute Species IV (Fig. 7).

Claims 1-9, 14, and 18-20 are all readable on Species IV.

Applicant makes this election with traverse. It is respectfully submitted that the search directed to the elected species would necessarily encompass other species identified by the Examiner.

Withdrawal of the election requirement and an early and favorable action on the merits are requested.

Respectfully submitted,

WOOD, PHILLIPS, KATZ,
CLARK & MORTIMER

By _____
John S. Mortimer
Reg. No. 30,407

Dated: April 16, 2018

500 West Madison Street
Suite 1130
Chicago, IL 60661-2562
(312) 876-2113

Electronic Patent Application Fee Transmittal

Application Number:	15040735
Filing Date:	10-Feb-2016
Title of Invention:	APPARATUS WITH WEIGHT RESPONSIVE CHANGEABLE ADJUSTING CHARACTERISTICS
First Named Inventor/Applicant Name:	Aaron DeJule
Filer:	John Stirling Mortimer/Linda Bowen
Attorney Docket Number:	DEJ10730P00071US

Filed as Small Entity

Filing Fees for Utility under 35 USC 111(a)

Description	Fee Code	Quantity	Amount	Sub-Total in USD($)
Basic Filing:				
Pages:				
Claims:				
Miscellaneous-Filing:				
Petition:				
Patent-Appeals-and-Interference:				
Post-Allowance-and-Post-Issuance:				
Extension-of-Time:				

Description	Fee Code	Quantity	Amount	Sub-Total in USD($)
Extension - 1 month with $0 paid	2251	1	100	100
Miscellaneous:				
		Total in USD ($)		**100**

Electronic Acknowledgement Receipt

EFS ID:	32345359
Application Number:	15040735
International Application Number:	
Confirmation Number:	1083
Title of Invention:	APPARATUS WITH WEIGHT RESPONSIVE CHANGEABLE ADJUSTING CHARACTERISTICS
First Named Inventor/Applicant Name:	Aaron DeJule
Customer Number:	32116
Filer:	John Stirling Mortimer/Linda Bowen
Filer Authorized By:	John Stirling Mortimer
Attorney Docket Number:	DEJ10730P00071US
Receipt Date:	16-APR-2018
Filing Date:	10-FEB-2016
Time Stamp:	12:24:59
Application Type:	Utility under 35 USC 111(a)

Payment information:

Submitted with Payment	yes
Payment Type	DA
Payment was successfully received in RAM	$100
RAM confirmation Number	041618INTEFSW00010923230785
Deposit Account	
Authorized User	
The Director of the USPTO is hereby authorized to charge indicated fees and credit any overpayment as follows:	

File Listing:

Document Number	Document Description	File Name	File Size(Bytes)/ Message Digest	Multi Part /.zip	Pages (if appl.)
1	Extension of Time	15040735_EOT.pdf	101365 07105315e32390deb436d760257f0938c4b3697b	no	1
Warnings:					
Information:					
2	Response to Election / Restriction Filed	15040735_Response.pdf	53720 59a36e3833ebe5e38529aa60cdb70e6715dc2ce9	no	2
Warnings:					
Information:					
3	Fee Worksheet (SB06)	fee-info.pdf	30782 944cc2189b85a7fbe188704e12cb7ee0492ce39b	no	2
Warnings:					
Information:					
		Total Files Size (in bytes):	185867		

This Acknowledgement Receipt evidences receipt on the noted date by the USPTO of the indicated documents, characterized by the applicant, and including page counts, where applicable. It serves as evidence of receipt similar to a Post Card, as described in MPEP 503.

<u>New Applications Under 35 U.S.C. 111</u>
If a new application is being filed and the application includes the necessary components for a filing date (see 37 CFR 1.53(b)-(d) and MPEP 506), a Filing Receipt (37 CFR 1.54) will be issued in due course and the date shown on this Acknowledgement Receipt will establish the filing date of the application.
<u>National Stage of an International Application under 35 U.S.C. 371</u>
If a timely submission to enter the national stage of an international application is compliant with the conditions of 35 U.S.C. 371 and other applicable requirements a Form PCT/DO/EO/903 indicating acceptance of the application as a national stage submission under 35 U.S.C. 371 will be issued in addition to the Filing Receipt, in due course.
<u>New International Application Filed with the USPTO as a Receiving Office</u>
If a new international application is being filed and the international application includes the necessary components for an international filing date (see PCT Article 11 and MPEP 1810), a Notification of the International Application Number and of the International Filing Date (Form PCT/RO/105) will be issued in due course, subject to prescriptions concerning national security, and the date shown on this Acknowledgement Receipt will establish the international filing date of the application.

PTO/AIA/22 (03-13)
Approved for use through 11/30/2020. OMB 0651-0031
U.S. Patent and Trademark Office; U.S. DEPARTMENT OF COMMERCE
Under the Paperwork Reduction Act of 1995, no persons are required to respond to a collection of information unless it displays a valid OMB control number.

PETITION FOR EXTENSION OF TIME UNDER 37 CFR 1.136(a)

Docket Number (Optional): DEJ10730P00071US

Application Number: 15/040,735 | Filed: February 10, 2016

For: APPARATUS WITH WEIGHT RESPONSIVE CHANGEABLE...

Art Unit: 3636 | Examiner: Timothy J. Brindley

This is a request under the provisions of 37 CFR 1.136(a) to extend the period for filing a reply in the above-identified application.

The requested extension and fee are as follows (check time period desired and enter the appropriate fee below):

		Fee	Small Entity Fee	Micro Entity Fee	
☑	One month (37 CFR 1.17(a)(1))	$200	$100	$50	$ 100.00
☐	Two months (37 CFR 1.17(a)(2))	$600	$300	$150	$
☐	Three months (37 CFR 1.17(a)(3))	$1,400	$700	$350	$
☐	Four months (37 CFR 1.17(a)(4))	$2,200	$1,100	$550	$
☐	Five months (37 CFR 1.17(a)(5))	$3,000	$1,500	$750	$

☑ Applicant asserts small entity status. See 37 CFR 1.27.

☐ Applicant certifies micro entity status. See 37 CFR 1.29.
Form PTO/SB/15A or B or equivalent must either be enclosed or have been submitted previously.

☐ A check in the amount of the fee is enclosed.

☐ Payment by credit card. Form PTO-2038 is attached.

☐ The Director has already been authorized to charge fees in this application to a Deposit Account.

☑ The Director is hereby authorized to charge any fees which may be required, or credit any overpayment, to Deposit Account Number 23-0785.

☑ Payment made via EFS-Web.

WARNING: Information on this form may become public. Credit card information should not be included on this form. Provide credit card information and authorization on PTO-2038.

I am the

☐ applicant.

☑ attorney or agent of record. Registration number 30,407.

☐ attorney or agent acting under 37 CFR 1.34. Registration number _____.

Signature: [signature] | Date: April 16, 2018

Typed or printed name: John S. Mortimer | Telephone Number: 312-876-1800

NOTE: This form must be signed in accordance with 37 CFR 1.33. See 37 CFR 1.4 for signature requirements and certifications. Submit multiple forms if more than one signature is required, see below*.

☐ * Total of _____ forms are submitted.

This collection of information is required by 37 CFR 1.136(a). The information is required to obtain or retain a benefit by the public, which is to file (and by the USPTO to process) an application. Confidentiality is governed by 35 U.S.C. 122 and 37 CFR 1.11 and 1.14. This collection is estimated to take 8 minutes to complete, including gathering, preparing, and submitting the completed application form to the USPTO. Time will vary depending upon the individual case. Any comments on the amount of time you require to complete this form and/or suggestions for reducing this burden should be sent to the Chief Information Officer, U.S. Patent and Trademark Office, U.S. Department of Commerce, P.O. Box 1450, Alexandria, VA 22313-1450. DO NOT SEND FEES OR COMPLETED FORMS TO THIS ADDRESS. SEND TO: Mail Stop PCT, Commissioner for Patents, P.O. Box 1450, Alexandria, VA 22313-1450.

UNITED STATES PATENT AND TRADEMARK OFFICE

UNITED STATES DEPARTMENT OF COMMERCE
United States Patent and Trademark Office
Address: COMMISSIONER FOR PATENTS
P.O. Box 1450
Alexandria, Virginia 22313-1450
www.uspto.gov

APPLICATION NO.	FILING DATE	FIRST NAMED INVENTOR	ATTORNEY DOCKET NO.	CONFIRMATION NO.
15/040,735	02/10/2016	Aaron DeJule	DEJ10730P00071US	1083

32116 7590 06/26/2018
WOOD, PHILLIPS, KATZ, CLARK & MORTIMER
500 W. MADISON STREET
SUITE 1130
CHICAGO, ILLINOIS 60661
UNITED STATES OF AMERICA

EXAMINER
BRINDLEY, TIMOTHY J

ART UNIT	PAPER NUMBER
3636	

NOTIFICATION DATE	DELIVERY MODE
06/26/2018	ELECTRONIC

Please find below and/or attached an Office communication concerning this application or proceeding.

The time period for reply, if any, is set in the attached communication.

Notice of the Office communication was sent electronically on above-indicated "Notification Date" to the following e-mail address(es):

docketing@woodphillips.com

PTOL-90A (Rev. 04/07)

Office Action Summary	Application No. 15/040,735	Applicant(s) DeJule et al.	
	Examiner TIMOTHY J BRINDLEY	Art Unit 3636	AIA Status Yes

-- The MAILING DATE of this communication appears on the cover sheet with the correspondence address --

Period for Reply

A SHORTENED STATUTORY PERIOD FOR REPLY IS SET TO EXPIRE 3 MONTHS FROM THE MAILING DATE OF THIS COMMUNICATION.

- Extensions of time may be available under the provisions of 37 CFR 1.136(a). In no event, however, may a reply be timely filed after SIX (6) MONTHS from the mailing date of this communication.
- If NO period for reply is specified above, the maximum statutory period will apply and will expire SIX (6) MONTHS from the mailing date of this communication.
- Failure to reply within the set or extended period for reply will, by statute, cause the application to become ABANDONED (35 U.S.C. § 133). Any reply received by the Office later than three months after the mailing date of this communication, even if timely filed, may reduce any earned patent term adjustment. See 37 CFR 1.704(b).

Status

1)☑ Responsive to communication(s) filed on 2/10/16.

☐ A declaration(s)/affidavit(s) under **37 CFR 1.130(b)** was/were filed on _____.

2a)☐ This action is **FINAL.** 2b) ☑ This action is non-final.

3)☐ An election was made by the applicant in response to a restriction requirement set forth during the interview on _____; the restriction requirement and election have been incorporated into this action.

4)☐ Since this application is in condition for allowance except for formal matters, prosecution as to the merits is closed in accordance with the practice under *Ex parte Quayle*, 1935 C.D. 11, 453 O.G. 213.

Disposition of Claims*

5) ☑ Claim(s) 1-20 is/are pending in the application.

5a) Of the above claim(s) 10-13 and 15-17 is/are withdrawn from consideration.

6) ☐ Claim(s) _____ is/are allowed.

7) ☑ Claim(s) 1-9,14 and 18-20 is/are rejected.

8) ☐ Claim(s) _____ is/are objected to.

9) ☐ Claim(s) _____ are subject to restriction and/or election requirement

* If any claims have been determined allowable, you may be eligible to benefit from the **Patent Prosecution Highway** program at a participating intellectual property office for the corresponding application. For more information, please see http://www.uspto.gov/patents/init_events/pph/index.jsp or send an inquiry to **PPHfeedback@uspto.gov.**

Application Papers

10)☐ The specification is objected to by the Examiner.

11)☑ The drawing(s) filed on 2/10/16 is/are: a)☑ accepted or b)☐ objected to by the Examiner.

Applicant may not request that any objection to the drawing(s) be held in abeyance. See 37 CFR 1.85(a).

Replacement drawing sheet(s) including the correction is required if the drawing(s) is objected to. See 37 CFR 1.121(d).

Priority under 35 U.S.C. § 119

12)☐ Acknowledgment is made of a claim for foreign priority under 35 U.S.C. § 119(a)-(d) or (f).

Certified copies:

a)☐ All b)☐ Some** c)☐ None of the:

1.☐ Certified copies of the priority documents have been received.

2.☐ Certified copies of the priority documents have been received in Application No. _____.

3.☐ Copies of the certified copies of the priority documents have been received in this National Stage application from the International Bureau (PCT Rule 17.2(a)).

** See the attached detailed Office action for a list of the certified copies not received.

Attachment(s)

1) ☑ Notice of References Cited (PTO-892)

2) ☐ Information Disclosure Statement(s) (PTO/SB/08a and/or PTO/SB/08b) Paper No(s)/Mail Date _____.

3) ☐ Interview Summary (PTO-413) Paper No(s)/Mail Date _____.

4) ☐ Other: _____.

DETAILED ACTION

Notice of Pre-AIA or AIA Status

1. The present application, filed on or after March 16, 2013, is being examined under the first inventor to file provisions of the AIA.

2. Claims 1-20 are pending.

3. Claims 10-13, 15-17 are withdrawn from further consideration pursuant to 37 CFR 1.142(b), as being drawn to a nonelected Species, there being no allowable generic or linking claim. Applicant timely traversed the restriction (election) requirement in the reply filed on 4/16/18. The traversal is on the ground(s) that the search would necessarily encompass other species. This is not found persuasive because the additional Species provide patentably distinct features which would require additional consideration and/or search.

The requirement is still deemed proper and is therefore made FINAL.

Claim Rejections - 35 USC § 112

4. The following is a quotation of 35 U.S.C. 112(b):
(b) CONCLUSION.—The specification shall conclude with one or more claims particularly pointing out and distinctly claiming the subject matter which the inventor or a joint inventor regards as the invention.

The following is a quotation of 35 U.S.C. 112 (pre-AIA), second paragraph:
The specification shall conclude with one or more claims particularly pointing out and distinctly claiming the subject matter which the applicant regards as his invention.

5. Claims 1-9, 14 and 18-20 are rejected under 35 U.S.C. 112(b) or 35 U.S.C. 112 (pre-AIA), second paragraph, as being indefinite for failing to particularly point out and distinctly claim the subject matter which the inventor or a joint inventor, or for pre-AIA the applicant regards as the invention.

6. Claim 1 recites “a force is applied in a first manner in using the apparatus for its intended use.” It is unclear what an “intended use” of the apparatus may be considered and as such the

scope is considered indefinite. Further, this appears to be a subjective limitation which is dependent on the opinion of an individual.

7. It is additionally noted the generality of the terms used in claim 1 do not provide a definite structure to the apparatus, rendering it unclear exactly what is being claimed or the scope of apparatus (i.e. the apparatus could be anything from the seat that appears to be the intended object, to automotive parts, medical equipment, or any other of a panoply of devices).

8. Claim 20 is indefinite as it depends on itself.

Claim Rejections - 35 USC § 102

9. The following is a quotation of the appropriate paragraphs of 35 U.S.C. 102 that form the basis for the rejections under this section made in this Office action:

> A person shall be entitled to a patent unless –
>
> (a)(1) the claimed invention was patented, described in a printed publication, or in public use, on sale or otherwise available to the public before the effective filing date of the claimed invention.

10. Claim(s) 1-8, 14, 19 and 20 is/are rejected under 35 U.S.C. 102(a)(1) as being anticipated by Schmitz et al. (US 2009/0261637) ("Schmitz"). Schmitz discloses a frame (fig. 2a: 2); at least a first component (fig. 2a: 13) on the frame upon which a force is applied in a first manner in using the apparatus for its intended purpose; at least a second component (fig. 2a: 14) on the frame that is movable relative to the at least first component and/or the frame and upon which a force can be applied in a second manner to reconfigure the apparatus by moving the at least second component relative to the at least first component and/or the frame (fig. 2a: 14 can be reclined); and an adjusting assembly (shown in fig. 2a) cooperating between the at least first component and the at least second component and configured so that as an incident of the force being applied in the first manner changing, the force being applied in the second manner required to reconfigure the apparatus changes.

As concerns claim 2, Schmitz discloses wherein the second component is guided in pivoting movement relative to the at least first component and/or the frame around an axis (fig. 2a: 18 or 19 are pivot axes).

As concerns claim 3, Schmitz discloses a piece of furniture (fig. 2a).

As concerns claims 4 and 5, Schmitz discloses wherein the reconfigurable apparatus is a chair with the at least first component comprising a seat (fig. 2a: 13) and the second component is a backrest (fig. 2a: 14).

As concerns claims 6, Schmitz discloses wherein the adjusting assembly comprises a spring assembly that is configured to exert a force that resists movement of the at least second component and that varies as a magnitude of the force applied in the first manner varies (fig. 2a shows that as spring 37 is pushed down from the force of the user on the seat, the effective length of the leaf spring 20 is shortened thereby varying the pivot resistance of the backrest).

As concerns claim 7, Schmitz discloses wherein the spring assembly comprises a leaf spring with a length that is bendable about a fulcrum location and the adjusting assembly and at least second component are configured so that as the force applied in the first manner changes in magnitude an effective length of the leaf spring changes (as discussed in claim 6).

As concerns claim 8, Schmitz discloses wherein the adjusting assembly is configured so that an increase in magnitude of the force applied in the first manner causes an increase in magnitude of the force applied in the second manner required to reconfigure the apparatus.

As concerns claim 14, Schmitz discloses wherein the spring assembly comprises at least one leaf spring (fig. 2a: 20).

As concerns claim 19, Schmitz discloses wherein the seat is configured to move vertically relative to the frame when the first force is applied (fig. 2a, the seat moves downward against spring 37 to move 29 along inclined surface 30).

As concerns claim 20, Schmitz discloses wherein the apparatus comprises a biasing assembly that urges the seat upward (fig. 2a: 37).

11. In the alternative, claim(s) 1 and 18 is/are rejected under 35 U.S.C. 102(a)(1) as being anticipated by Schmitz et al. (US 2009/0261637) ("Schmitz") (embodiment of Figs. 7a-7f). Schmitz discloses a frame (fig. 7a: 4); at least a first component (fig. 7a: 7) on the frame upon which a force is applied in a first manner in using the apparatus for its intended purpose; at least a second component (fig. 7a: B) on the frame that is movable relative to the at least first component and/or the frame and upon which a force can be applied in a second manner to reconfigure the apparatus by moving the at least second component relative to the at least first component and/or the frame (fig. 7a: B can be reclined with respect to the frame); and an adjusting assembly (shown in fig. 7d) cooperating between the at least first component and the at least second component and configured so that as an incident of the force being applied in the first manner changing, the force being applied in the second manner required to reconfigure the apparatus changes.

As concerns claim 18, Schmitz discloses wherein the adjusting assembly comprises cooperating toothed elements (fig. 7d: 86, 87) that move relative to each other as a magnitude of the force applied in the first manner reaches a predetermined level.

Claim Rejections - 35 USC § 103

12. The following is a quotation of 35 U.S.C. 103 which forms the basis for all obviousness rejections set forth in this Office action:

> A patent for a claimed invention may not be obtained, notwithstanding that the claimed invention is not identically disclosed as set forth in section 102, if the differences between the claimed invention and the prior art are such that the claimed invention as a whole would have been obvious before the effective filing date of the claimed invention to a person having ordinary skill in the art to which the claimed invention pertains. Patentability shall not be negated by the manner in which the invention was made.

13. Claim 9 is/are rejected under 35 U.S.C. 103 as being unpatentable over Schmitz in view of Masunaga et al. (US 2013/0169017) ("Masunaga"). Schmitz does not teach wherein the leaf spring has a non-uniform cross section along its length. However, Masunaga teaches a

reclining chair having leaf springs (Masunaga, fig. 8: 18) which has a non-uniform cross section along its length (Masunaga, fig. 8: 18a, 18b) allowing for a stronger spring portion at a connection end 18a. It would have been obvious to a person having ordinary skill in the art, at the time that the invention was filed, to modify the leaf spring of Schmitz to have a thicker end cross-section in the end where it is connected to the frame in order to provide additional stability/strength to the spring at the connection point.

Conclusion

14. Any inquiry concerning this communication or earlier communications from the examiner should be directed to TIMOTHY J BRINDLEY whose telephone number is (571)270-7231. The examiner can normally be reached on Mon-Fri, 9am-5pm.

Examiner interviews are available via telephone, in-person, and video conferencing using a USPTO supplied web-based collaboration tool. To schedule an interview, applicant is encouraged to use the USPTO Automated Interview Request (AIR) at http://www.uspto.gov/interviewpractice.

If attempts to reach the examiner by telephone are unsuccessful, the examiner's supervisor, David Dunn can be reached on 5712726670. The fax phone number for the organization where this application or proceeding is assigned is 571-273-8300.

Information regarding the status of an application may be obtained from the Patent Application Information Retrieval (PAIR) system. Status information for published applications may be obtained from either Private PAIR or Public PAIR. Status information for unpublished applications is available through Private PAIR only. For more information about the PAIR system, see http://pair-direct.uspto.gov. Should you have questions on access to the Private PAIR system, contact the Electronic Business Center (EBC) at 866-217-9197 (toll-free). If you would like assistance from a USPTO Customer Service Representative or access to the automated information system, call 800-786-9199 (IN USA OR CANADA) or 571-272-1000.

/TIMOTHY J BRINDLEY/
Primary Examiner, Art Unit 3636

Notice of References Cited	Application/Control No. 15/040,735	Applicant(s)/Patent Under Reexamination DeJule et al.	
	Examiner TIMOTHY J BRINDLEY	Art Unit 3636	Page 1 of 1

U.S. PATENT DOCUMENTS

*		Document Number Country Code-Number-Kind Code	Date MM-YYYY	Name	CPC Classification	US Classification
*	A	US-20160100691-A1	04-2016	MASUNAGA; Hiroshi	A47C7/462	297/285
*	B	US-20120025574-A1	02-2012	Wilkinson; Paul Michael	A47C1/03	297/300.1
*	C	US-20150123441-A1	05-2015	Duke; Aaron	A47C1/03255	297/300.4
*	D	US-20130169017-A1	07-2013	Masunaga; Hiroshi	A47C1/03255	297/320
*	E	US-20090261637-A1	10-2009	Schmitz; Johann Burkhard	A47C1/03255	297/217.2
*	F	US-20090267394-A1	10-2009	Bock; Hermann	A47C1/03255	297/300.2
*	G	US-20080088163-A1	04-2008	Sander; Armin	A47C1/03255	297/300.4
*	H	US-20060202530-A1	09-2006	Lin; Yu-Hong	A47C1/03238	297/300.1
*	I	US-4911501-A	03-1990	Decker; Lloyd B.	A47C1/03255	297/285
*	J	US-6250715-B1	06-2001	Caruso; Jerome C.	A47C1/03	297/300.2
	K					
	L					
	M					

FOREIGN PATENT DOCUMENTS

*		Document Number Country Code-Number-Kind Code	Date MM-YYYY	Country	Name	CPC Classification
	N					
	O					
	P					
	Q					
	R					
	S					
	T					

NON-PATENT DOCUMENTS

*		Include as applicable: Author, Title Date, Publisher, Edition or Volume, Pertinent Pages)
	U	
	V	
	W	
	X	

*A copy of this reference is not being furnished with this Office action. (See MPEP § 707.05(a).)
Dates in MM-YYYY format are publication dates. Classifications may be US or foreign.

Search Notes	Application/Control No.	Applicant(s)/Patent Under Reexamination
	15/040,735	DeJule et al.
	Examiner	**Art Unit**
	TIMOTHY J BRINDLEY	3636

CPC - Searched*		
Symbol	**Date**	**Examiner**
A47C7/445	06/21/2018	TJB
A47C7/441	06/21/2018	TJB
A47C1/03277	06/21/2018	TJB
A47C1/03266	06/21/2018	TJB

CPC Combination Sets - Searched*		
Symbol	**Date**	**Examiner**

US Classification - Searched*			
Class	**Subclass**	**Date**	**Examiner**

* See search history printout included with this form or the SEARCH NOTES box below to determine the scope of the search.

Search Notes		
Search Notes	**Date**	**Examiner**
Inventor Name Search	06/21/2018	TJB

Interference Search			
US Class/CPC Symbol	**US Subclass/CPC Group**	**Date**	**Examiner**

/TIMOTHY J BRINDLEY/ Primary Examiner, Art Unit 3636	

Index of Claims	Application/Control No.	Applicant(s)/Patent Under Reexamination
	15/040,735	DeJule et al.
	Examiner	**Art Unit**
	TIMOTHY J BRINDLEY	3636

✓	Rejected	-	Cancelled	N	Non-Elected	A	Appeal
=	Allowed	÷	Restricted	I	Interference	O	Objected

CLAIMS

☐ Claims renumbered in the same order as presented by applicant ☐ CPA ☐ T.D. ☐ R.1.47

CLAIM		DATE								
Final	Original	06/21/2018								
	1	✓								
	2	✓								
	3	✓								
	4	✓								
	5	✓								
	6	✓								
	7	✓								
	8	✓								
	9	✓								
	10	N								
	11	N								
	12	N								
	13	N								
	14	✓								
	15	N								
	16	N								
	17	N								
	18	✓								
	19	✓								
	20	✓								

UNITED STATES PATENT AND TRADEMARK OFFICE

UNITED STATES DEPARTMENT OF COMMERCE
United States Patent and Trademark Office
Address: COMMISSIONER FOR PATENTS
P.O. Box 1450
Alexandria, Virginia 22313-1450
www.uspto.gov

BIB DATA SHEET

CONFIRMATION NO. 1083

SERIAL NUMBER	FILING or 371(c) DATE	CLASS	GROUP ART UNIT	ATTORNEY DOCKET NO.
15/040,735	02/10/2016 RULE	297	3636	DEJ10730P00071US

APPLICANTS

INVENTORS

Aaron DeJule, River Forest, IL;
Scott Padiak, Glance, IL;
Paul C. Evans, Bellaire, MI;

**** CONTINUING DATA ****************************

This appln claims benefit of 62/114,706 02/11/2015

**** FOREIGN APPLICATIONS ****************************

**** IF REQUIRED, FOREIGN FILING LICENSE GRANTED **** ** SMALL ENTITY **
02/25/2016

Foreign Priority claimed	❑ Yes ☑ No		STATE OR COUNTRY	SHEETS DRAWINGS	TOTAL CLAIMS	INDEPENDENT CLAIMS
35 USC 119(a-d) conditions met	❑ Yes ❑ No	❑ Met after Allowance	IL	6	20	1
Verified and Acknowledged	/TIMOTHY J BRINDLEY/ Examiner's Signature	Initials				

ADDRESS

WOOD, PHILLIPS, KATZ, CLARK & MORTIMER
500 W. MADISON STREET
SUITE 1130
CHICAGO, IL 60661
UNITED STATES

TITLE

APPARATUS WITH WEIGHT RESPONSIVE CHANGEABLE ADJUSTING CHARACTERISTICS

FILING FEE RECEIVED		
800	FEES: Authority has been given in Paper No._____ to charge/credit DEPOSIT ACCOUNT No._____ for following:	❑ All Fees ❑ 1.16 Fees (Filing) ❑ 1.17 Fees (Processing Ext. of time) ❑ 1.18 Fees (Issue) ❑ Other _____ ❑ Credit

EAST Search History

EAST Search History (Prior Art)

Ref #	Hits	Search Query	DBs	Default Operator	Plurals	Time Stamp
L2	2	("2009/0261637").URPN.	USPAT	OR	OFF	2018/06/21 10:00
L4	3	("2013/0169017").URPN.	USPAT	OR	OFF	2018/06/21 10:58
L5	3	("2008/0088163").URPN.	USPAT	OR	OFF	2018/06/21 10:58
L6	40	("20010000939" | "20020158495" | "20020171276" | "20020171277" | "20060163925" | "20080088163" | "20110012409" | "3455601" | "3602475" | "4151973" | "4743065" | "4744603" | "4758045" | "4776633" | "5080318" | "5224758" | "5348372" | "5370445" | "5388889" | "5487591" | "5547252" | "5584533" | "5611598" | "5909924" | "6015187" | "6523896" | "6582019" | "6709056" | "6709058" | "6840578" | "7857390" | "7992937").PN. OR ("8146990").URPN.	US-PGPUB; USPAT; USOCR	OR	OFF	2018/06/21 10:59
L7	291	A47C1/03277.cpc.	US-PGPUB; USPAT; EPO; JPO	OR	OFF	2018/06/21 11:16
S1	403	A47C7/445.cpc.	US-PGPUB; USPAT; EPO; JPO	OR	OFF	2018/06/20 18:42
S2	407	A47C7/441.cpc.	US-PGPUB; USPAT; EPO; JPO	OR	OFF	2018/06/20 18:42
S3	291	A47C1/03277.cpc.	US-PGPUB; USPAT; EPO; JPO	OR	OFF	2018/06/20 18:43
S4	513	A47C1/03266.cpc.	US-PGPUB; USPAT; EPO; JPO	OR	OFF	2018/06/20 18:43
S5	183	A47C1/03277.cpc. and leaf	US-PGPUB; USPAT; EPO; JPO	OR	OFF	2018/06/20 18:47

6/ 21/ 2018 11:48:23 AM
C:\ Users\ tbrindley\ Documents\ EAST\ Workspaces\ 15040735.wsp

UNITED STATES PATENT AND TRADEMARK OFFICE

UNITED STATES DEPARTMENT OF COMMERCE
United States Patent and Trademark Office
Address: COMMISSIONER FOR PATENTS
P.O. Box 1450
Alexandria, Virginia 22313-1450
www.uspto.gov

APPLICATION NO.	FILING DATE	FIRST NAMED INVENTOR	ATTORNEY DOCKET NO.	CONFIRMATION NO.
15/040,735	02/10/2016	Aaron DeJule	DEJ10730P00071US	1083

32116 7590 08/13/2018
WOOD, PHILLIPS, KATZ, CLARK & MORTIMER
500 W. MADISON STREET
SUITE 1130
CHICAGO, ILLINOIS 60661
UNITED STATES OF AMERICA

EXAMINER
BRINDLEY, TIMOTHY J

ART UNIT	PAPER NUMBER
3636	

NOTIFICATION DATE	DELIVERY MODE
08/13/2018	ELECTRONIC

Please find below and/or attached an Office communication concerning this application or proceeding.

The time period for reply, if any, is set in the attached communication.

Notice of the Office communication was sent electronically on above-indicated "Notification Date" to the following e-mail address(es):

docketing@woodphillips.com

PTOL-90A (Rev. 04/07)

Applicant-Initiated Interview Summary	**Application No.** 15/040,735	**Applicant(s)** DeJule et al.	
	Examiner TIMOTHY J BRINDLEY	**Art Unit** 3636	**AIA Status** Yes

All participants (applicant, applicants representative, PTO personnel):

(1) TIMOTHY J. BRINDLEY. (3) _____.

(2) JOHN MORTIMER. (4) _____.

Date of Interview: 08 August 2018.

Type: ☑ Telephonic ☐ Video Conference
☐ Personal [copy given to: ☐ applicant ☐ applicant's representative]

Exhibit shown or demonstration conducted: ☐ Yes ☑ No.
If Yes, brief description: _____.

Issues Discussed ☐101 ☐112 ☑102 ☑103 ☐Others
(For each of the checked box(es) above, please describe below the issue and detailed description of the discussion)

Claim(s) discussed: 1.

Identification of prior art discussed: Masunaga and Schmitz.

Substance of Interview
(For each issue discussed, provide a detailed description and indicate if agreement was reached. Some topics may include: identification or clarification of a reference or a portion thereof, claim interpretation, proposed amendments, arguments of any applied references etc...)

Applicant provided proposed amendments which appeared to overcome the previous rejection using the Schmitz reference. Applicant also provided proposed amendments narrowing the intended use of the apparatus. No agreement was made..

Applicant recordation instructions: The formal written reply to the last Office action must include the substance of the interview. (See MPEP section 713.04). If a reply to the last Office action has already been filed, applicant is given a non-extendable period of the longer of one month or thirty days from this interview date, or the mailing date of this interview summary form, whichever is later, to file a statement of the substance of the interview

Examiner recordation instructions: Examiners must summarize the substance of any interview of record. A complete and proper recordation of the substance of an interview should include the items listed in MPEP 713.04 for complete and proper recordation including the identification of the general thrust of each argument or issue discussed, a general indication of any other pertinent matters discussed regarding patentability and the general results or outcome of the interview, to include an indication as to whether or not agreement was reached on the issues raised.

☐ Attachment

/TIMOTHY J BRINDLEY/ Primary Examiner, Art Unit 3636	

Summary of Record of Interview Requirements

Manual of Patent Examining Procedure (MPEP), Section 713.04, Substance of Interview Must be Made of Record
A complete written statement as to the substance of any face-to-face, video conference, or telephone interview with regard to an application must be made of record in the application whether or not an agreement with the examiner was reached at the interview.

Title 37 Code of Federal Regulations (CFR) 1.133 Interviews
Paragraph (b)

In every instance where reconsideration is requested in view of an interview with an examiner, a complete written statement of the reasons presented at the interview as warranting favorable action must be filed by the applicant. An interview does not remove the necessity for reply to Office action as specified in §§ 1.111, 1.135. (35 U.S.C. 132)

37 CFR §1.2 Business to be transacted in writing.
All business with the Patent or Trademark Office should be transacted in writing. The personal attendance of applicants or their attorneys or agents at the Patent and Trademark Office is unnecessary. The action of the Patent and Trademark Office will be based exclusively on the written record in the Office. No attention will be paid to any alleged oral promise, stipulation, or understanding in relation to which there is disagreement or doubt.

The action of the Patent and Trademark Office cannot be based exclusively on the written record in the Office if that record is itself incomplete through the failure to record the substance of interviews.

It is the responsibility of the applicant or the attorney or agent to make the substance of an interview of record in the application file, unless the examiner indicates he or she will do so. It is the examiners responsibility to see that such a record is made and to correct material inaccuracies which bear directly on the question of patentability.

Examiners must complete an Interview Summary Form for each interview held where a matter of substance has been discussed during the interview by checking the appropriate boxes and filling in the blanks. Discussions regarding only procedural matters, directed solely to restriction requirements for which interview recordation is otherwise provided for in Section 812.01 of the Manual of Patent Examining Procedure, or pointing out typographical errors or unreadable script in Office actions or the like, are excluded from the interview recordation procedures below. Where the substance of an interview is completely recorded in an Examiners Amendment, no separate Interview Summary Record is required.

The Interview Summary Form shall be given an appropriate Paper No., placed in the right hand portion of the file, and listed on the "Contents" section of the file wrapper. In a personal interview, a duplicate of the Form is given to the applicant (or attorney or agent) at the conclusion of the interview. In the case of a telephone or video-conference interview, the copy is mailed to the applicants correspondence address either with or prior to the next official communication. If additional correspondence from the examiner is not likely before an allowance or if other circumstances dictate, the Form should be mailed promptly after the interview rather than with the next official communication.

The Form provides for recordation of the following information:
- Application Number (Series Code and Serial Number)
- Name of applicant
- Name of examiner
- Date of interview
- Type of interview (telephonic, video-conference, or personal)
- Name of participant(s) (applicant, attorney or agent, examiner, other PTO personnel, etc.)
- An indication whether or not an exhibit was shown or a demonstration conducted
- An identification of the specific prior art discussed
- An indication whether an agreement was reached and if so, a description of the general nature of the agreement (may be by attachment of a copy of amendments or claims agreed as being allowable). Note: Agreement as to allowability is tentative and does not restrict further action by the examiner to the contrary.
- The signature of the examiner who conducted the interview (if Form is not an attachment to a signed Office action)

It is desirable that the examiner orally remind the applicant of his or her obligation to record the substance of the interview of each case. It should be noted, however, that the Interview Summary Form will not normally be considered a complete and proper recordation of the interview unless it includes, or is supplemented by the applicant or the examiner to include, all of the applicable items required below concerning the substance of the interview.

A complete and proper recordation of the substance of any interview should include at least the following applicable items:
1) A brief description of the nature of any exhibit shown or any demonstration conducted,-
2) an identification of the claims discussed,
3) an identification of the specific prior art discussed,
4) an identification of the principal proposed amendments of a substantive nature discussed, unless these are already described on the Interview Summary Form completed by the Examiner,
5) a brief identification of the general thrust of the principal arguments presented to the examiner,
   (The identification of arguments need not be lengthy or elaborate. A verbatim or highly detailed description of the arguments is not required. The identification of the arguments is sufficient if the general nature or thrust of the principal arguments made to the examiner can be understood in the context of the application file. Of course, the applicant may desire to emphasize and fully describe those arguments which he or she feels were or might be persuasive to the examiner.)
6) a general indication of any other pertinent matters discussed, and
7) if appropriate, the general results or outcome of the interview unless already described in the Interview Summary Form completed by the examiner.

Examiners are expected to carefully review the applicants record of the substance of an interview. If the record is not complete and accurate, the examiner will give the applicant an extendable one month time period to correct the record.

Examiner to Check for Accuracy

If the claims are allowable for other reasons of record, the examiner should send a letter setting forth the examiners version of the statement attributed to him or her. If the record is complete and accurate, the examiner should place the indication, Interview Record OK on the paper recording the substance of the interview along with the date and the examiners initials.

Electronic Patent Application Fee Transmittal

Application Number:	15040735
Filing Date:	10-Feb-2016
Title of Invention:	APPARATUS WITH WEIGHT RESPONSIVE CHANGEABLE ADJUSTING CHARACTERISTICS
First Named Inventor/Applicant Name:	Aaron DeJule
Filer:	John Stirling Mortimer/Linda Bowen
Attorney Docket Number:	DEJ10730P00071US

Filed as Small Entity

Filing Fees for Utility under 35 USC 111(a)

Description	Fee Code	Quantity	Amount	Sub-Total in USD($)
Basic Filing:				
Pages:				
Claims:				
CLAIMS IN EXCESS OF 20	2202	2	50	100
Miscellaneous-Filing:				
Petition:				
Patent-Appeals-and-Interference:				
Post-Allowance-and-Post-Issuance:				

Description	Fee Code	Quantity	Amount	Sub-Total in USD($)
Extension-of-Time:				
Miscellaneous:				
			Total in USD ($)	**100**

Electronic Acknowledgement Receipt	
EFS ID:	33449673
Application Number:	15040735
International Application Number:	
Confirmation Number:	1083
Title of Invention:	APPARATUS WITH WEIGHT RESPONSIVE CHANGEABLE ADJUSTING CHARACTERISTICS
First Named Inventor/Applicant Name:	Aaron DeJule
Customer Number:	32116
Filer:	John Stirling Mortimer/Linda Bowen
Filer Authorized By:	John Stirling Mortimer
Attorney Docket Number:	DEJ10730P00071US
Receipt Date:	13-AUG-2018
Filing Date:	10-FEB-2016
Time Stamp:	15:00:28
Application Type:	Utility under 35 USC 111(a)

Payment information:

Submitted with Payment	yes
Payment Type	DA
Payment was successfully received in RAM	$100
RAM confirmation Number	081418INTEFSW00001525230785
Deposit Account	
Authorized User	
The Director of the USPTO is hereby authorized to charge indicated fees and credit any overpayment as follows:	

File Listing:

Document Number	Document Description	File Name	File Size(Bytes)/ Message Digest	Multi Part /.zip	Pages (if appl.)
1	Amendment/Req. Reconsideration-After Non-Final Reject	15040735_AMdt_A_Statement.pdf	443324 8cb160ec84131265df79356d9abfd64ffb36d2b4	no	12
Warnings:					
Information:					
2	Fee Worksheet (SB06)	fee-info.pdf	30512 cd4aa232496b61f1d6c0e85e3cb5a7489f6deeb0	no	2
Warnings:					
Information:					
		Total Files Size (in bytes):	473836		

This Acknowledgement Receipt evidences receipt on the noted date by the USPTO of the indicated documents, characterized by the applicant, and including page counts, where applicable. It serves as evidence of receipt similar to a Post Card, as described in MPEP 503.

<u>New Applications Under 35 U.S.C. 111</u>
If a new application is being filed and the application includes the necessary components for a filing date (see 37 CFR 1.53(b)-(d) and MPEP 506), a Filing Receipt (37 CFR 1.54) will be issued in due course and the date shown on this Acknowledgement Receipt will establish the filing date of the application.
<u>National Stage of an International Application under 35 U.S.C. 371</u>
If a timely submission to enter the national stage of an international application is compliant with the conditions of 35 U.S.C. 371 and other applicable requirements a Form PCT/DO/EO/903 indicating acceptance of the application as a national stage submission under 35 U.S.C. 371 will be issued in addition to the Filing Receipt, in due course.
<u>New International Application Filed with the USPTO as a Receiving Office</u>
If a new international application is being filed and the international application includes the necessary components for an international filing date (see PCT Article 11 and MPEP 1810), a Notification of the International Application Number and of the International Filing Date (Form PCT/RO/105) will be issued in due course, subject to prescriptions concerning national security, and the date shown on this Acknowledgement Receipt will establish the international filing date of the application.

IN THE UNITED STATES PATENT AND TRADEMARK OFFICE

In re Application of:	)	APPARATUS WITH WEIGHT RESPONSIVE CHANGEABLE ADJUSTABLE CHARACTERISTICS
AARON DEJULE et al.	)	
	)	Examiner: Timothy J. Brindley
Serial No. 15/040,735	)	Group Art Unit 3636
Filed: February 10, 2016	)	Confirmation No. 1083

AMENDMENT "A" AND
STATEMENT OF SUBSTANCE OF EXAMINER INTERVIEW

Commissioner for Patents
P.O. Box 1450
Alexandria, VA 22313-1450

Sir:

Responsive to the Office Action dated June 26, 2018, please amend the above-identified application as indicated below.

Amendments to the Specification begin on page **2** of this paper.

Amendments to the Claims begin on page **3** of this paper.

Remarks begin on page **9** of this paper.

AMENDMENTS TO THE SPECIFICATION:

On page 13, paragraph [0059], please amend as follows:

The leaf spring end [[50]] 19 is anchored in the member 36 to project in cantilever fashion vertically upwardly therefrom. In this embodiment, the body 46 of the leaf spring 19 is preloaded so that it naturally assumes the dotted line shape and position.

AMENDMENTS TO THE CLAIMS:

1. (Currently Amended) A reconfigurable apparatus for supporting at least part of a user's weight with the user in an operative position with respect to the reconfigurable apparatus, the reconfigurable apparatus comprising:

a frame;

~~at least~~ a first component on the frame upon which a force is applied by a user in a first manner ~~in using the apparatus for its intended purpose~~ as an incident of the user assuming the operative position;

at least a second component on the frame that is movable relative to the ~~at least~~ first component ~~and/or the frame~~ and upon which a force can be applied by a user in the operative position in a second manner to reconfigure the apparatus by moving the at least second component relative to the ~~at least~~ first component ~~and/or the frame~~; and

an adjusting assembly cooperating between the ~~at least~~ first component and the at least second component and configured so that as an incident of the force being applied in the first manner changing in magnitude, the force being applied in the second manner required to reconfigure the apparatus and move the second component relative to the first component changes in magnitude.

2. (Currently Amended) The reconfigurable apparatus according to claim 1 wherein the second component is guided in pivoting movement relative to the ~~at least~~ first component ~~and/or the frame~~ around an axis.

3. (Original) The reconfigurable apparatus according to claim 1 wherein the reconfigurable apparatus is a piece of furniture.

4. (Currently Amended) The reconfigurable apparatus according to claim 3 wherein the reconfigurable apparatus is a chair in which a user in the operative position is seated, with the ~~at least~~ first component comprising a seat upon which a user applies the force in the first manner by sitting in the chair.

5. (Original) The reconfigurable apparatus according to claim 4 wherein the at least second component comprises a back rest against which a user seated in the chair leans to exert the force in the second manner to reconfigure the chair.

6. (Currently Amended) The reconfigurable apparatus according to claim 5 wherein the adjusting assembly comprises a spring assembly that is configured to exert a force that resists movement of the at least second component relative to the first component and that varies as [[a]] the magnitude of the force applied in the first manner varies.

7. (Original) The reconfigurable apparatus according to claim 6 wherein the spring assembly comprises a leaf spring with a length that is bendable about a fulcrum location and the adjusting assembly and at least second component are configured so that as the force applied in the first manner changes in magnitude an effective length of the leaf spring changes.

8. (Original) The reconfigurable apparatus according to claim 1 wherein the adjusting assembly is configured so that an increase in magnitude of the force applied in the first manner causes an increase in magnitude of the force applied in the second manner required to reconfigure the apparatus.

9. (Original) The reconfigurable apparatus according to claim 7 wherein the leaf spring has a cross-sectional shape as viewed orthogonally to its length that is non-uniform over at least a portion of the length of the leaf spring.

10. (Withdrawn) The reconfigurable apparatus according to claim 6 wherein the spring assembly comprises a plurality of leaf springs each with a length that bends around a fulcrum location.

11. (Withdrawn) The reconfigurable apparatus according to claim 10 wherein the adjusting assembly and at least second component are configured so that a different number of said plurality of leaf springs exerts a force that resists movement of the at least second component based upon a magnitude of the force applied in the first manner.

12. (Withdrawn) The reconfigurable apparatus according to claim 6 wherein the spring assembly comprises an elongate spring component with a length that exerts the force that resists movement of the at least second component in line with the length of the spring.

13. (Withdrawn) The reconfigurable apparatus according to claim 12 wherein the second component is guided in pivoting movement relative to the at least first component and/or the frame around an axis and the second component and adjusting assembly are configured so that the elongate spring component exerts the force that resists movement of the at least second component at a distance from the axis that changes as a magnitude of the force applied in the first manner changes.

14. (Original) The reconfigurable apparatus according to claim 6 wherein the spring assembly comprises at least one leaf spring.

15. (Withdrawn) The reconfigurable apparatus according to claim 14 wherein the at least one leaf spring has a length and spaced supported ends and the apparatus further comprises an actuating component that is configured to bear against the one leaf spring between the spaced supported ends to resist movement of the at least second component as the force is applied in the second manner with a magnitude that reconfigures the apparatus.

16. (Withdrawn) The reconfigurable apparatus according to claim 6 wherein the spring assembly comprises a torsion component with an axis and the apparatus further comprises an actuating component that is configured to turn the torsion component around the axis to generate the force that resists movement of the at least second component as the force is applied in the first manner with a magnitude that reconfigures the apparatus.

17. (Withdrawn) The reconfigurable apparatus according to claim 16 wherein the actuating component and torsion component are configured so that the actuating component engages the torsion component at different locations along the axis of the torsion component as a magnitude of the force applied in the first manner changes.

18. (Original) The reconfigurable apparatus according to claim 1 wherein the adjusting assembly comprises cooperating toothed elements that move relative to each other as a magnitude of the force applied in the first manner reaches a predetermined level.

19. (Original) The reconfigurable apparatus according to claim 4 wherein the seat is configured to move vertically relative to the frame with the first force applied in the first manner with a magnitude that reaches a predetermined level.

20. (Currently Amended) The reconfigurable apparatus according to claim [[20]] 1 wherein the apparatus further comprises a supporting biasing assembly that normally biasably urges the seat upwardly relative to the frame.

21. (New) The reconfigurable apparatus according to claim 2 wherein the axis is spaced from the first component.

22. (New) The reconfigurable apparatus according to claim 5 wherein the back rest is spaced from the seat.

REMARKS

Claims 1-9, 14, and 18-20 are currently pending in the application. New claims 21 and 22 are presented.

Claims 1-9, 14, and 18-20 stand rejected under 35 U.S.C. § 112, second paragraph, as allegedly being indefinite for failing to particularly point out and distinctly claim the invention.

The dependency of claim 20 has been amended to address the error identified by the Examiner.

Claim 1 has been amended to characterize the nature of the reconfigurable apparatus as one for supporting at least part of a user's weight with the user in an operative position with respect to the reconfigurable apparatus. It is believed that this addresses the Examiner's concerns with the alleged lack of clarity with respect to "intended use".

Since this added limitation is in each of dependent claims 2-9, 14, and 18-20, reconsideration and withdrawal of the rejection under 35 U.S.C. § 112 is requested.

Claims 1-8, 14, 19, and 20 stand rejected under 35 U.S.C. § 102 as allegedly anticipated by U.S. Patent Application Publication No. 2009/0261637, to Schmitz et al. (Schmitz). The rejection is framed alternatively in paragraphs 10 and 11. In paragraph 10, the Examiner bases the anticipation rejection of claims 1-8, 14, 19, and 20 upon Fig. 2a of Schmitz, whereas in paragraph 11, the anticipation rejection of claims 1 and 18 is based upon Figs. 7a-7f of Schmitz. Claim 9 stands rejected under 35 U.S.C. § 103 as obvious over Schmitz in view of U.S. Patent Application Publication No. 2013/0169017, to Masunaga et al. (Masunaga).

Reconsideration of the rejection of claims 1-9, 14, and 18-20, and favorable consideration of new claims 21 and 22 are requested.

Applicant's undersigned attorney wishes to thank Examiner Brindley for the courtesies extended during the telephonic interview conducted on August 8, 2018.

Prior to the interview, a draft Amendment "A" was submitted for use as an agenda. The claims amendments and arguments in that draft Amendment are the same as those presented herein.

The Examiner indicated that it appears that the amendments to the claims overcome the rejection under 35 U.S.C. § 112. The Examiner was going to do additional searching to see if the language in claim 1 is broad enough to encompass prior art other than an apparatus with a seat and a backrest.

The Examiner indicated that it appears that the amendments overcome the rejection based upon Schmitz. The Examiner said he was going to give further consideration to the disclosure in Masunaga, particularly with respect to the pushing rod 23.

Claim 1 has been amended to characterize the reconfigurable apparatus as an apparatus for supporting at least a part of a user's weight with the user in an operative position with respect to the reconfigurable apparatus. The reconfigurable apparatus has a first component on the frame upon which a force is applied by a user in a first manner as an incident of the user assuming the operative position. At least a second component on the frame is movable relative to the first component and is configured so that a force can be applied upon the second component by a user in the operative position in a second manner to reconfigure the apparatus by moving the at

least second component relative to the first component. The adjusting assembly is characterized as cooperating between the first component and the at least second component. As an incident of the force applied in the first manner changing in magnitude, the force being applied in the second manner required to reconfigure the apparatus and move the second component relative to the first component changes in magnitude.

Schmitz does not teach or make obvious at least an adjusting assembly as recited in claim 1. Claim 1 distinguishes from Schmitz by requiring that the magnitude of the force required to move the second component relative to the first component is altered by the magnitude of the force applied to the first component. The Examiner is relying on Schmitz for the compression of the spring 36 which changes the force required to pivot the back rest 14 as a unit with the seat 7. Schmitz' separate embodiments would have to be completely redesigned to arrive at the structure in claim 1, which is thus believed allowable.

Claims 2-8, 14, 19, and 20, and new claims 21-22, are based directly or indirectly upon claim 1 and recite further significant limitations to further distinguish over Schmitz.

In rejecting claim 9, the Examiner relies upon the particular spring configuration in Masunaga. However, since the basic structure of claim 1 is lacking in Schmitz, there would be no motivation to use the Masunaga spring configuration to arrive at the Applicant's claimed structure.

Reconsideration of the rejection of claims 1-9, 14, and 18-20 and allowance of the case are requested.

Respectfully submitted,

WOOD, PHILLIPS, KATZ,
CLARK & MORTIMER

By _____
John S. Mortimer
Reg. No. 30,407

Dated: Aug 13, 2018

500 West Madison Street
Suite 1130
Chicago, IL 60661-2562
(312) 876-2113

PTO/SB/06 (09-11)
Approved for use through 1/31/2014. OMB 0651-0032
U.S. Patent and Trademark Office; U.S. DEPARTMENT OF COMMERCE
Under the Paperwork Reduction Act of 1995, no persons are required to respond to a collection of information unless it displays a valid OMB control number.

PATENT APPLICATION FEE DETERMINATION RECORD Substitute for Form PTO-875	Application or Docket Number 15/040,735	Filing Date 02/10/2016	☐ To be Mailed

ENTITY: ☐ LARGE ☑ SMALL ☐ MICRO

APPLICATION AS FILED - PART I

FOR	(Column 1) NUMBER FILED	(Column 2) NUMBER EXTRA		RATE ($)	FEE ($)
☐ BASIC FEE (37 CFR 1.16(a), (b), or (c))	N/A	N/A		N/A	
☐ SEARCH FEE (37 CFR 1.16(k), (i), or (m))	N/A	N/A		N/A	
☐ EXAMINATION FEE (37 CFR 1.16(o), (p), or (q))	N/A	N/A		N/A	
TOTAL CLAIMS (37 CFR 1.16(i))	minus 20 =	*		x $40 =	
INDEPENDENT CLAIMS (37 CFR 1.16(h))	minus 3 =	*		x $210 =	
☐ APPLICATION SIZE FEE (37 CFR 1.16(s))	If the specification and drawings exceed 100 sheets of paper, the application size fee due is $310 ($155 for small entity) for each additional 50 sheets or fraction thereof. See 35 U.S.C. 41(a)(1)(G) and 37 CFR 1.16(s).				
☐ MULTIPLE DEPENDENT CLAIM PRESENT (37 CFR 1.16(j))					
* If the difference in column 1 is less than zero, enter "0" in column 2.				TOTAL	

APPLICATION AS AMENDED - PART II

AMENDMENT	08/13/2018	(Column 1) CLAIMS REMAINING AFTER AMENDMENT		(Column 2) HIGHEST NUMBER PREVIOUSLY PAID FOR	(Column 3) PRESENT EXTRA		RATE ($)	ADDITIONAL FEE ($)
	Total (37 CFR 1.16(i))	* 22	Minus	** 20	= 2		x $50 =	100
	Independent (37 CFR 1.16(h))	* 1	Minus	*** 3	= 0		x $230 =	0
	☐ Application Size Fee (37 CFR 1.16(s))							
	☐ FIRST PRESENTATION OF MULTIPLE DEPENDENT CLAIM (37 CFR 1.16(j))							
							TOTAL ADD'L FEE	100

AMENDMENT		(Column 1) CLAIMS REMAINING AFTER AMENDMENT		(Column 2) HIGHEST NUMBER PREVIOUSLY PAID FOR	(Column 3) PRESENT EXTRA		RATE ($)	ADDITIONAL FEE ($)
	Total (37 CFR 1.16(i))	*	Minus	**	=		x $0 =	
	Independent (37 CFR 1.16(h))	*	Minus	***	=		x $0 =	
	☐ Application Size Fee (37 CFR 1.16(s))							
	☐ FIRST PRESENTATION OF MULTIPLE DEPENDENT CLAIM (37 CFR 1.16(j))							
							TOTAL ADD'L FEE	

* If the entry in column 1 is less than the entry in column 2, write "0" in column 3.	LIE
** If the "Highest Number Previously Paid For" IN THIS SPACE is less than 20, enter "20".	REGINALD TYSON
*** If the "Highest Number Previously Paid For" IN THIS SPACE is less than 3, enter "3".	
The "Highest Number Previously Paid For" (Total or Independent) is the highest number found in the appropriate box in column 1.	

This collection of information is required by 37 CFR 1.16. The information is required to obtain or retain a benefit by the public which is to file (and by the USPTO to process) an application. Confidentiality is governed by 35 U.S.C. 122 and 37 CFR 1.14. This collection is estimated to take 12 minutes to complete, including gathering, preparing, and submitting the completed application form to the USPTO. Time will vary depending upon the individual case. Any comments on the amount of time you require to complete this form and/or suggestions for reducing this burden, should be sent to the Chief Information Officer, U.S. Patent and Trademark Office, U.S. Department of Commerce, P.O. Box 1450, Alexandria, VA 22313-1450. DO NOT SEND FEES OR COMPLETED FORMS TO THIS ADDRESS. **SEND TO: Commissioner for Patents, P.O. Box 1450, Alexandria, VA 22313-1450.**

If you need assistance in completing the form, call 1-800-PTO-9199 and select option 2.

PTO/SB/08a (02-18)
Approved for use through 11/30/2020. OMB 0651-0031
U.S. Patent and Trademark Office; U.S. DEPARTMENT OF COMMERCE
Under the Paperwork Reduction Act of 1995, no persons are required to respond to a collection of information unless it contains a valid OMB control number.

INFORMATION DISCLOSURE STATEMENT BY APPLICANT

(Not for submission under 37 CFR 1.99)

Application Number	15040735
Filing Date	2016-02-10
First Named Inventor	Aaron DeJule
Art Unit	3636
Examiner Name	Timothy J. Brindley
Attorney Docket Number	DEJ10730P00071US

U.S.PATENTS Remove

Examiner Initial*	Cite No	Patent Number	Kind Code[1]	Issue Date	Name of Patentee or Applicant of cited Document	Pages,Columns,Lines where Relevant Passages or Relevant Figures Appear
	1	4962962		1990-10-16	Machate et al.	
	2	8025334		2011-09-27	Schmitz et al.	

If you wish to add additional U.S. Patent citation information please click the Add button. Add

U.S.PATENT APPLICATION PUBLICATIONS Remove

Examiner Initial*	Cite No	Publication Number	Kind Code[1]	Publication Date	Name of Patentee or Applicant of cited Document	Pages,Columns,Lines where Relevant Passages or Relevant Figures Appear
	1					

If you wish to add additional U.S. Published Application citation information please click the Add button. Add

FOREIGN PATENT DOCUMENTS Remove

Examiner Initial*	Cite No	Foreign Document Number[3]	Country Code[2] i	Kind Code[4]	Publication Date	Name of Patentee or Applicant of cited Document	Pages,Columns,Lines where Relevant Passages or Relevant Figures Appear	T[5]
	1	37 00447	DE	A1	1987-01-09	VOKO		X

If you wish to add additional Foreign Patent Document citation information please click the Add button Add

NON-PATENT LITERATURE DOCUMENTS Remove

INFORMATION DISCLOSURE STATEMENT BY APPLICANT (Not for submission under 37 CFR 1.99)	Application Number	15040735
	Filing Date	2016-02-10
	First Named Inventor	Aaron DeJule
	Art Unit	3636
	Examiner Name	Timothy J. Brindley
	Attorney Docket Number	DEJ10730P00071US

Examiner Initials*	Cite No	Include name of the author (in CAPITAL LETTERS), title of the article (when appropriate), title of the item (book, magazine, journal, serial, symposium, catalog, etc), date, pages(s), volume-issue number(s), publisher, city and/or country where published.	T[5]
	1		

If you wish to add additional non-patent literature document citation information please click the Add button Add

EXAMINER SIGNATURE

Examiner Signature		Date Considered	

*EXAMINER: Initial if reference considered, whether or not citation is in conformance with MPEP 609. Draw line through a citation if not in conformance and not considered. Include copy of this form with next communication to applicant.

[1] See Kind Codes of USPTO Patent Documents at www.USPTO.GOV or MPEP 901.04. [2] Enter office that issued the document, by the two-letter code (WIPO Standard ST.3). [3] For Japanese patent documents, the indication of the year of the reign of the Emperor must precede the serial number of the patent document. [4] Kind of document by the appropriate symbols as indicated on the document under WIPO Standard ST.16 if possible. [5] Applicant is to place a check mark here if English language translation is attached.

INFORMATION DISCLOSURE STATEMENT BY APPLICANT (Not for submission under 37 CFR 1.99)	Application Number	15040735
	Filing Date	2016-02-10
	First Named Inventor	Aaron DeJule
	Art Unit	3636
	Examiner Name	Timothy J. Brindley
	Attorney Docket Number	DEJ10730P00071US

CERTIFICATION STATEMENT

Please see 37 CFR 1.97 and 1.98 to make the appropriate selection(s):

That each item of information contained in the information disclosure statement was first cited in any communication from a foreign patent office in a counterpart foreign application not more than three months prior to the filing of the information disclosure statement. See 37 CFR 1.97(e)(1).

OR

☒ That no item of information contained in the information disclosure statement was cited in a communication from a foreign patent office in a counterpart foreign application, and, to the knowledge of the person signing the certification after making reasonable inquiry, no item of information contained in the information disclosure statement was known to any individual designated in 37 CFR 1.56(c) more than three months prior to the filing of the information disclosure statement. See 37 CFR 1.97(e)(2).

See attached certification statement.

The fee set forth in 37 CFR 1.17 (p) has been submitted herewith.

A certification statement is not submitted herewith.

SIGNATURE

A signature of the applicant or representative is required in accordance with CFR 1.33, 10.18. Please see CFR 1.4(d) for the form of the signature.

Signature	/John S. Mortimer/	Date (YYYY-MM-DD)	2018-12-12
Name/Print	John S. Mortimer	Registration Number	30407

This collection of information is required by 37 CFR 1.97 and 1.98. The information is required to obtain or retain a benefit by the public which is to file (and by the USPTO to process) an application. Confidentiality is governed by 35 U.S.C. 122 and 37 CFR 1.14. This collection is estimated to take 1 hour to complete, including gathering, preparing and submitting the completed application form to the USPTO. Time will vary depending upon the individual case. Any comments on the amount of time you require to complete this form and/or suggestions for reducing this burden, should be sent to the Chief Information Officer, U.S. Patent and Trademark Office, U.S. Department of Commerce, P.O. Box 1450, Alexandria, VA 22313-1450. DO NOT SEND FEES OR COMPLETED FORMS TO THIS ADDRESS. **SEND TO: Commissioner for Patents, P.O. Box 1450, Alexandria, VA 22313-1450.**

Privacy Act Statement

The Privacy Act of 1974 (P.L. 93-579) requires that you be given certain information in connection with your submission of the attached form related to a patent application or patent. Accordingly, pursuant to the requirements of the Act, please be advised that: (1) the general authority for the collection of this information is 35 U.S.C. 2(b)(2); (2) furnishing of the information solicited is voluntary; and (3) the principal purpose for which the information is used by the U.S. Patent and Trademark Office is to process and/or examine your submission related to a patent application or patent. If you do not furnish the requested information, the U.S. Patent and Trademark Office may not be able to process and/or examine your submission, which may result in termination of proceedings or abandonment of the application or expiration of the patent.

The information provided by you in this form will be subject to the following routine uses:

1. The information on this form will be treated confidentially to the extent allowed under the Freedom of Information Act (5 U.S.C. 552) and the Privacy Act (5 U.S.C. 552a). Records from this system of records may be disclosed to the Department of Justice to determine whether the Freedom of Information Act requires disclosure of these record s.

2. A record from this system of records may be disclosed, as a routine use, in the course of presenting evidence to a court, magistrate, or administrative tribunal, including disclosures to opposing counsel in the course of settlement negotiations.

3. A record in this system of records may be disclosed, as a routine use, to a Member of Congress submitting a request involving an individual, to whom the record pertains, when the individual has requested assistance from the Member with respect to the subject matter of the record.

4. A record in this system of records may be disclosed, as a routine use, to a contractor of the Agency having need for the information in order to perform a contract. Recipients of information shall be required to comply with the requirements of the Privacy Act of 1974, as amended, pursuant to 5 U.S.C. 552a(m).

5. A record related to an International Application filed under the Patent Cooperation Treaty in this system of records may be disclosed, as a routine use, to the International Bureau of the World Intellectual Property Organization, pursuant to the Patent Cooperation Treaty.

6. A record in this system of records may be disclosed, as a routine use, to another federal agency for purposes of National Security review (35 U.S.C. 181) and for review pursuant to the Atomic Energy Act (42 U.S.C. 218(c)).

7. A record from this system of records may be disclosed, as a routine use, to the Administrator, General Services, or his/her designee, during an inspection of records conducted by GSA as part of that agency's responsibility to recommend improvements in records management practices and programs, under authority of 44 U.S.C. 2904 and 2906. Such disclosure shall be made in accordance with the GSA regulations governing inspection of records for this purpose, and any other relevant (i.e., GSA or Commerce) directive. Such disclosure shall not be used to make determinations about individuals.

8. A record from this system of records may be disclosed, as a routine use, to the public after either publication of the application pursuant to 35 U.S.C. 122(b) or issuance of a patent pursuant to 35 U.S.C. 151. Further, a record may be disclosed, subject to the limitations of 37 CFR 1.14, as a routine use, to the public if the record was filed in an application which became abandoned or in which the proceedings were terminated and which application is referenced by either a published application, an application open to public inspections or an issued patent.

9. A record from this system of records may be disclosed, as a routine use, to a Federal, State, or local law enforcement agency, if the USPTO becomes aware of a violation or potential violation of law or regulation.

(19) BUNDESREPUBLIK DEUTSCHLAND

DEUTSCHES PATENTAMT

(12) Offenlegungsschrift

(11) DE 3700447 A1

(51) Int. Cl. 4:
A47 C 1/031
A 47 C 9/02

(21) Aktenzeichen: P 37 00 447.6
(22) Anmeldetag: 9. 1. 87
(43) Offenlegungstag: 21. 7. 88

Behördeneigentum

DE 3700447 A1

(71) Anmelder:
VOKO - Franz Vogt & Co, 6301 Pohlheim, DE

(74) Vertreter:
Missling, A., Dipl.-Ing., Pat.-Anw., 6300 Gießen

(72) Erfinder:
Hansen, Eckhard, St. Margrethen, CH

(54) Sitzmöbel

Es wird ein Sitzmöbel, insbesondere Bürostuhl, Sessel o. dgl. vorgeschlagen, bei welchem sich die erforderliche Gegenkraft zur Verstellung der Rückenlehnenneigung in Abhängigkeit vom Gewicht der Benutzerperson selbständig einstellt. Hierfür wird mittels einer auf ein Hebelsystem wirkenden Druckfeder (16) ein Gegenmoment (13) erzeugt, hervorgerufen durch die Vorspannung der Druckfeder (16) in Abhängigkeit der Gewichtskraft (17) (hierzu Zeichnung).

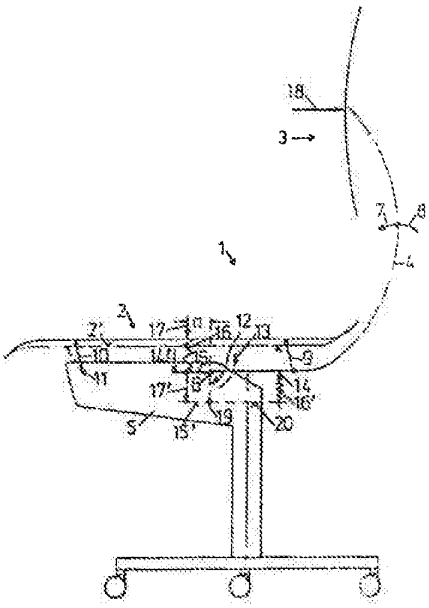

DE 3700447 A1

Patentansprüche

1. Sitzmöbel, insbesondere Bürostuhl, Sessel o. dgl., bestehend aus einem, an einem Sitzträger angelenkten Sitzteil und einem, vorzugsweise an einem Rückenträger abgestützten Rückenteil, dessen Rückenneigungsverstellung gegen eine verstellbare Gegenkraft erfolgt, **dadurch gekennzeichnet,** daß das Körpergewicht (17) der Benutzerperson über die Belastung des Sitzteils (2) erfaßbar ist und daß die erforderliche Anlehnkraft (18) zur Rückenneigungsverstellung des Rückenteils (3) sich in Abhängigkeit der Gewichtskraft (17) der Benutzerperson verstellt.

2. Sitzmöbel nach Anspruch 1, dadurch gekennzeichnet, daß die durch Belastung des Sitzteils (2) infolge der Gewichtskraft (17) eintretende Sitzteil-Abwärtsbewegung unmittelbar oder über ein Hebelgestänge mittelbar auf eine Feder im Sinne einer Federvorspannung übertragbar ist und daß die Feder ein Gegendrehmoment (13) gegen die Rückenneigungsverstellung des Rückenträgers (4) erzeugt.

3. Sitzmöbel nach Anspruch 1 oder 2, dadurch gekennzeichnet, daß der Rückenträger (4) am Sitzträger (5) über ein Festlager (6) als Drehlager angelenkt ist und daß eine Druckfeder (16, 24) über einen Hebelarm (15, 25) ein Gegenmoment (13) um das Drehlager (6) erzeugt, wobei der Hebelarm (*a*) die Größe des Gegenmoments (13) und damit die notwendige Andrückkraft (18) zur Rückenneigungsverstellung der Rückenlehne (3) bestimmt.

4. Sitzmöbel nach einem der Ansprüche 1 bis 3, dadurch gekennzeichnet, daß eine unterhalb des Sitzteils (2) angeordnete vertikale Druckfeder (16) auf einen, um das Festlager (6) des Rückenträgers (4) drehenden horizontalen Hebelarm (15) im Abstand (*a*) einwirkt, zur Erzeugung eines Gegenmoments (13) gegen die Rückenneigungsverstellung.

5. Sitzmöbel nach einem der Ansprüche 1 bis 3, dadurch gekennzeichnet, daß die Abwärtsbewegung des Sitzteils (2) auf ein im vorderen Bereich des Sitzträgers (5) gelagertes Hebelgestänge (26, 27) übertragbar ist, daß die Kippbewegung des Hebelgestänges (26, 27) um den festen Anlenkpunkt (28) ein Zusammendrücken der vorzugsweise quer gelagerten Druckfeder (24) bewirkt, die sich am hinteren, um den Drehpunkt des Festlagers (6) drehenden Hebelarm (25) abstützt.

6. Sitzmöbel nach einem oder mehreren der vorhergehenden Ansprüche, dadurch gekennzeichnet, daß das Sitzteil (2) über eine Biegezone (21) mit dem Rückenteil (3) zur Bildung einer durchgehenden Sitzschale verbunden ist.

Beschreibung

Die Erfindung betrifft ein Sitzmöbel, insbesondere Bürostuhl, Sessel o. dgl., bestehend aus einem, an einem Sitzträger angelenkten Sitzteil und einem, vorzugsweise an einem Rückenträger abgestützten Rückenteil, dessen Rückenneigungsverstellung gegen eine verstellbare Gegenkraft erfolgt.

Sitzmöbel, insbesondere Bürostühle, bestehen aus einer Sitzfläche mit an dieser angelenkten Rückenlehne, wobei Sitzfläche und/oder Rückenlehne in ihrer Neigung verstellbar sind. Einfache Bürostühle weisen meist nur eine, an einem Rückenträger befestigte, höhenverstellbare Rückenlehne auf, die ggf. federnd am Sitz befestigt ist. Komfortable Bürostühle besitzen meist durchgehende Sitzschalen, die vom Sitzbereich in den Rükkenbereich hineinführen, wobei die Rückenlehne über einen mehr oder weniger kompliziert aufgebauten Rükkenträger gehalten und geführt ist. Aus der DE-Al 35 20 188 des Anmelders ist eine derartige Sitzmechanik bekannt. In der vom Anmelder vorgeschlagenen Anmeldung P 36 42 796.9 ist die Bauweise mit einer durchgehenden Sitzschale wiedergegeben, wobei zwischen Sitzteil und Rückenteil eine flexible Biegezone vorhanden ist.

Bei den bekannten Stuhlgeometrien ist es vorgesehen, daß die Verstellung der Rückenlehne um einen Winkel von ca. 5° nach vorn und ca. 15° bis 20° nach hinten erfolgt. Dies geschieht in Abhängigkeit einer Abwärtsbewegung und Neigungsverstellung des Sitzteils. Die Rückenneigungsverstellung erfolgt dabei gegen den Druck einer, mittels einer manuellen Verstelleinrichtung vorspannbaren Gegenfeder. Der Gegendruck der Rükkenlehne kann demnach stufenlos mittels eines Handrads o. dgl. verstellt werden, um eine individuelle Anpassung an die Benutzerperson zu schaffen. So muß der Gegendruck der Rückenlehne bei großen und schweren Personen infolge des größeren Körpergewichts stärker ausgeführt werden, als bei leichten kleineren Personen.

Der Erfindung liegt die Aufgabe zugrunde, eine automatische Anpassung der Gegenkraft der Rückenneigungsverstellung in Abhängigkeit der Benutzerperson zu schaffen.

Diese Aufgabe wird ausgehend von einem Sitzmöbel der einleitend bezeichnenden Art erfindungsgemäß dadurch gelöst, daß das Körpergewicht der Benutzerperson über die Belastung des Sitzteils erfaßbar ist und daß die erforderliche Anlehnkraft zur Rückenneigungsverstellung des Rückenteils sich in Abhängigkeit der Gewichtskraft der Benutzerperson verstellt.

Durch die in den Unteransprüchen aufgeführten Maßnahmen sind vorteilhafte Weiterbildungen und Verbesserungen des im Hauptanspruch angegebenen Gegenstands angegeben.

Der erfindungsgemäße Sitz, insbesondere Bürostuhl hat gegenüber den bekannten Einrichtungen den Vorteil, daß eine automatische Anpassung der Gegenkraft der Rückenlehnenverstellung in Abhängigkeit des Körpergewichts der Benutzerperson erfolgt. Dies beruht auf dem prinzipiellen Gedanken, daß das Körpergewicht bei der Belastung des Sitzteils erfaßt wird und die Gegenkraft der Rückenneigungsverstellung des Rückenteils in Abhängigkeit des Körpergewichts regelbar ist. Bei einer leichteren Person ist demnach die Gegenkraft der Rückenneigungsverstellung geringer, als bei einer schweren Benutzerperson. Ein umständliches Hantieren an einem Verstellrad zur Anpassung der Rückenlehnengegenkraft ist deshalb nicht erforderlich.

Gemäß der Weiterbildung der Erfindung nach den Unteransprüchen erfolgt die Anpassung der Gegenkraft des Rückenteils über eine Hebelmechanik in Verbindung mit einer Feder, insbesondere einer Druckfeder. Die Druckfeder wird hierbei durch das Körpergewicht zusammengedrückt, d. h. vorgespannt und die Rückenlehnenverstellung erfolgt dann gegen diese vorgespannte Feder. Vorzugsweise führt dabei der Rückenträger eine Drehbewegung um einen festen Drehpunkt am Sitzträger durch. Dieser Drehbewegung wirkt die vorgespannte Druckfeder über ein Hebelsystem entgegen. Dabei ist es unbeachtlich, wie die Feder an der Stuhlmechanik angebracht ist. Maßgeblich ist nur die Erzeugung eines Gegendrehmoments gegen die Rük-

kenneigungsverstellung in Abhängigkeit von der Vorspannung der Feder. Anstelle einer Druckfeder kann bei entsprechender Anbringung bzw. Anlenkung auch eine Zugfeder oder Drehfeder o. dgl. verwendet werden.

Die in den Unteransprüchen aufgeführten Ausführungsvarianten können deshalb durch weitere erfindungsgemäße Varianten ergänzt werden, bei welchen ein Gegendrehmoment gegen die Rückenneigungsverstellung des Rückenteils in Abhängigkeit der Gewichtsbelastung geschaffen wird.

Vorteilhafte und zweckmäßige Ausführungsbeispiele der Erfindung sind in der Zeichnung dargestellt und in der nachfolgenden Beschreibung näher erläutert. Es zeigen

Fig. 1a) und b) die Anordnung eines Stuhls mit vertikaler Druckfeder und vom Sitzteil getrenntem und durchgehendem Rückteil und

Fig. 2a) und b) eine Anordnung mit horizontaler Druckfeder mit vom Sitzteil getrenntem und durchgehendem Rückenteil.

Der in der **Fig. 1a)** dargestellte Sitz **(1)** besteht aus einem Sitzteil **(2)** und einem Rückenteil **(3)**, welches über einen Rückenträger **(4)** am Sitzträger **(5)** befestigt ist.

Das Festlager **(6)** bildet dabei den Drehpunkt zur Durchführung einer Rückenneigungsverstellung der Rückenlehne **(3)**. Diese erfolgt üblicherweise um ca. 5° nach vorn (Pfeil 7) und ca. 15° bis 20° nach hinten (Pfeil 8). Zur Durchführung einer Punktsynchronmechanik entsprechend den in der Beschreibungseinleitung genannten Druckschriften ist das Sitzteil **(2)** in seinem hinteren Bereich mit einem Verbindungsgestänge **(9)** mit dem Rückenträger **(4)** derart verbunden, daß eine Neigungsverstellung der Rückenlehne gleichzeitig eine Neigungsverstellung und Abwärtsbewegung des Sitzteils **(2)** zur Folge hat. Im vorderen Bereich ist das Sitzteil **(2)** unmittelbar oder über ein Verbindungsgestänge **(10)** mittelbar mit einem festen Anlenkpunkt **(11)** am Sitzträger **(5)** verbunden.

Die Neigungsverstellung des Rückenteils **(3)** nach hinten (Pfeil 8) erfolgt um den Drehpunkt des Festlagers **(6)**. Dies ergibt eine Drehbewegung des Rückenträgers **(4)** im Uhrzeigersinn gemäß Pfeil **(12)**. Um eine Gegenkraft gegen die Neigungsverstellung der Rückenlehne **(3)** zu erzeugen, muß ein Gegenmoment gemäß Pfeil **(13)** um den Drehpunkt **(6)** erzeugt werden. Dies kann beispielsweise durch eine nach oben auf den Rückenträger wirkende Kraft entsprechend Pfeil **(14)** erfolgen. Dies könnte beispielsweise durch eine — ggf. verstellbare — Druckfeder geschehen. Verlängert man den Rückenträger **(4)** über den Drehpunkt des Festlagers **(6)** hinaus, so entsteht ein Hebelarm **(15)**, an dem ebenfalls eine von oben nach unten gerichtete Kraft (Pfeil **14'**) angreifen kann, um ein Gegenmoment entsprechend Pfeil **(13)** zu erzeugen.

Erfindungsgemäß wird das Gegenmoment (Pfeil 13) dadurch erzeugt, daß zwischen Sitzteil **(2)** und Hebelarm **(15)** eine Druckfeder **(16)** angeordnet ist, die bei Belastung des Sitzteils **(2)** durch das Gewicht der Benutzerperson **(17)** vorgespannt wird. Die Anlehnkraft **(18)** gegen das Rückenteil **(3)** ist deshalb unmittelbar proportional zur Gewichtskraft **(17)** auf das Sitzteil **(2)**. Eine hohe Gewichtskraft **(17)** erzeugt ein großes Gegendrehmoment **(13)** und damit ist eine größere Anlehnkraft **(18)** erforderlich, um die Rückenneigung (Pfeil 8) und damit eine Drehbewegung entsprechend Pfeil **(12)** durchzuführen.

Die Anordnung der Feder **(16)** muß stets ein Gegendrehmoment entsprechend Pfeil **(13)** erzeugen, wobei die Gewichtskraft **(17)** eine Vorspannung der Feder **(16)** in Abhängigkeit des Körpergewichts erzeugt.

Die Auswahl der Druckfeder **(16)** sowie der Hebelarm *(a)*, d. h. der Abstand der Druckfeder **(16)** zum Drehpunkt **(6)** bestimmen die Größe des Gegendrehmoments **(13)**.

In **Fig. 1a)** ist strichpunktiert eine Alternativausführung des prinzipiellen Erfindungsgedankens eingezeichnet. Hierzu wird die Gewichtskraft **(17)** als Hebelkraft **(17')** auf einen Hebelarm **(15')** übertragen, der um ein Festlager **(19)** am Sitzträger **(5)** dreht. Am gegenüberliegenden Hebelarm **(20)** ist die Druckfeder **(16')** gelagert, die eine nach oben gerichtete Kraft **(14)** auf den Rückenträger **(4)** im Sinne eines Gegenmoments **(13)** auslöst. Dabei ist die Gewichtskraft **(17)** stets maßgebend für die Vorspannung der Druckfeder **(16)** bzw. **(16')**. Die Hebelarme **(15')** bzw. **(20)** werden zur Erzeugung des geeigneten Gegenmoments **(13)** ausgewählt.

Eine alternative Ausführungsform der Erfindung ist in **Fig. 1b)** dargestellt. Gleiche Teile sind mit gleichen Bezugszeichen versehen. In Abwandlung zu **Fig. 1a)** ist in **Fig. 1b)** das Rückenteil **(3)** über eine Biegezone **(21)** mit dem Sitzteil **(2)** verbunden, so daß sich eine durchgehende Sitzschale bildet. Das um den Drehpunkt bzw. Festlager **(6)** gebildete Hebelsystem ist als Winkelarm **(15")** ausgebildet bestehend aus einem L-förmigen Winkel an dessen unterem horizontalen Schenkel **(22)** die Druckfeder **(16)** zur Erzeugung des Gegenmoments **(13)** angreift. Der Hebelarm um den Drehpunkt **(6)** ist mit *(a)* gekennzeichnet.

Zwischen dem am Sitzträger **(5)** ortsfesten Anlenkpunkt **(11)** und dem einen Ende des Schenkels **(22)** ist ein Blockierelement **(23)** eingebaut, welches zur Festlegung der Rückenlehnenverstellung in eine beliebige, vom Benutzer gewünschte Stellung ermöglicht. Zur Anlenkung dieses Blockierelements **(23)** ist der Hebelarm **(15")** als L-förmiger Winkel ausgebildet.

Die in den **Fig. 2a)** und b) dargestellten Ausführungsbeispiele zeigen eine den **Fig. 1 a)** und b) entsprechende Stuhlanordnung. Die Anordnung einer Druckfeder **(24)** zur Erzeugung eines Gegenmoments **(13)** um den Drehpunkt des Festlagers **(6)** ist horizontal gewählt. Hierbei greift die Druckfeder **(24)** auf einem vom Drehpunkt **(6)** abgewinkelten Hebelarm **(25)** an, um ein Gegenmoment **(13)** gegenüber der Neigungsverstellung (Pfeil 8) zu erzeugen.

Die Vorspannung der Druckfeder **(24)** durch die Gewichtskraft **(17)** der Benutzerperson erfolgt über ein Hebelgestänge **(26, 27)** um den Drehpunkt **(28)**, der gleichzeitig mit dem vorderen ortsfesten Anlenkpunkt **(11)** übereinstimmen kann. Zwischen vorderem Festpunkt bzw. Drehpunkt **(28)** und Hebelarmende **(25)** ist wiederum ein Blockierelement **(23)** zur Festlegung einer bestimmten Rückenneigung angeordnet.

In **Fig. 2a)** bewirkt eine Gewichtskraft **(17)** eine Drehbewegung des Hebelgestänges **(26, 27)** um den Drehpunkt **(28)** (siehe gestrichelte Linie) und damit ein Zusammendrücken der Druckfeder **(24)**. Die hiermit erzeugte Vorspannkraft **(29)** wirkt auf den Hebelarm **(25)** mit dem Hebelarm *(a)* und erzeugt ein Gegenmoment entsprechend Pfeil **(13)**. Die Anlehnkraft **(18)** gegen das Rückenteil **(3)** zur Erzeugung einer Rückenneigungsverstellung muß deshalb um so größer sein, je größer die Gewichtskraft **(17)** ist, um das Gegenmoment **(13)** zu überwinden.

Die Darstellung in **Fig. 2b)** entspricht derjenigen in **Fig. 2a)**, jedoch mit durchgehender Sitzschale mit Biegezone **(21)**.

Sofern man in den Fig. 1a) bis 2b) das Verbindungsgestänge (9) zwischen Sitzteil (2) und Rückenträger (4) anordnet, führt der Stuhl eine Synchronbewegung bei der Rückenneigungsverstellung aus, d. h. eine Neigungsverstellung der Rückenlehne hat gleichzeitig eine Neigungsverstellung bzw. Absenkung des Sitzteils zur Folge. Ist dies nicht erwünscht, kann man das Verbindungsgestänge auch direkt zwischen dem Sitzteil (2) und dem Sitzträger (5) anordnen, wie in Fig. 2a) mit Bezugszeichen (9') angeordnet.

In den Figuren ist die abgesenkte Stellung des Sitzteils (2) gestrichelt mit Bezugszeichen (2') dargestellt.

Die Erfindung ist nicht auf die dargestellten Ausführungsbeispiele beschränkt. Sie umfaßt auch vielmehr alle fachmännischen Weiterbildungen ohne eigenen erfinderischen Gehalt. Hierbei ist es stets wesentlich, ein von der Gewichtskraft (17) abhängiges Gegenmoment gegen die Rückenneigungsverstellung zu erzeugen, wobei mittels einer Federkraft, sei es Druckfeder, Zugfeder oder Drehfeder, das Gegenmoment erzeugt wird.

Nummer: 37 00 447
Int. Cl.4: A 47 C 1/031
Anmeldetag: 9. Januar 1987
Offenlegungstag: 21. Juli 1988

10

3700447

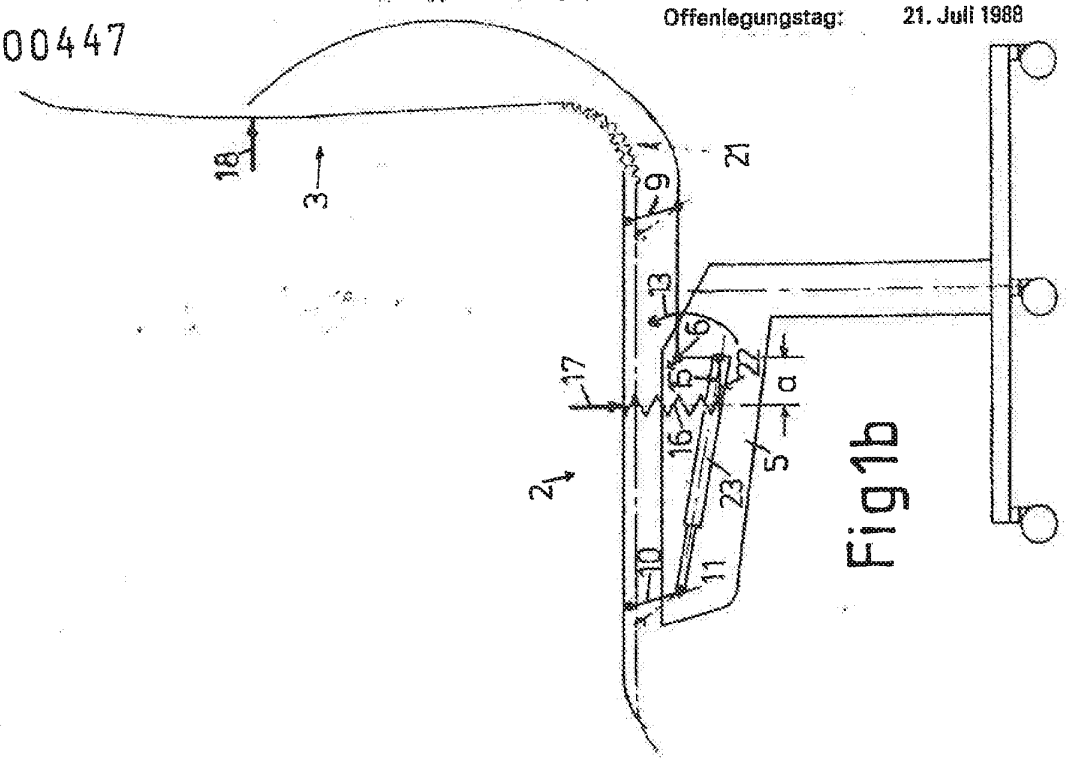

Fig 1b

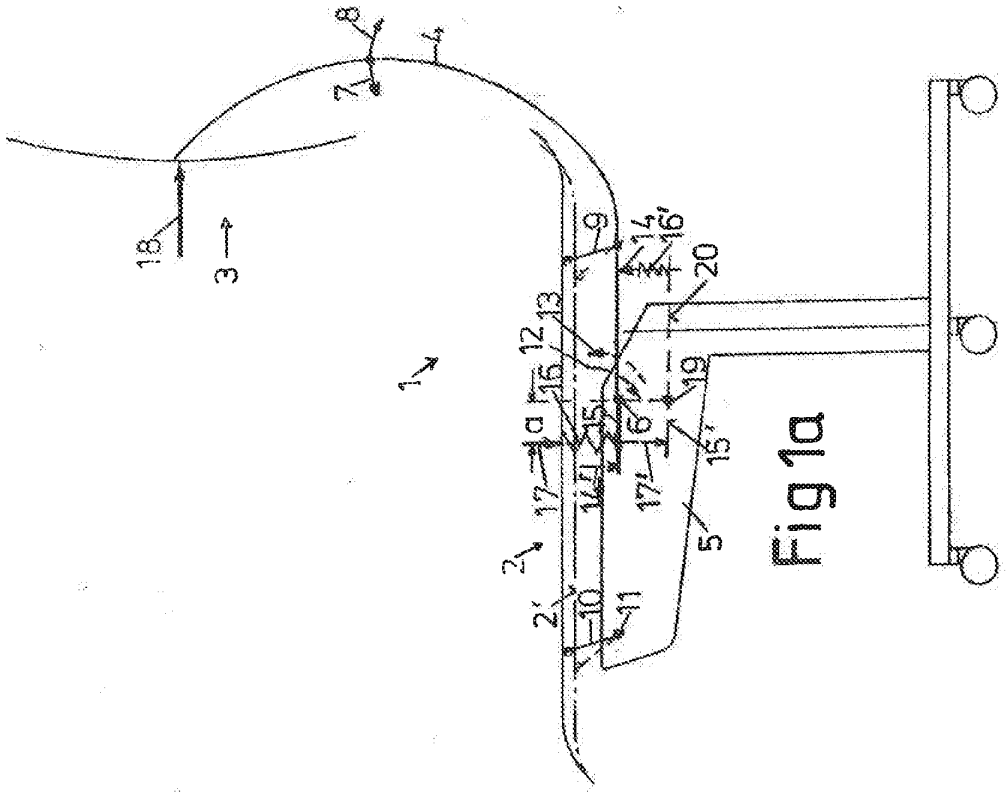

Fig 1a

808 829/101

3700447

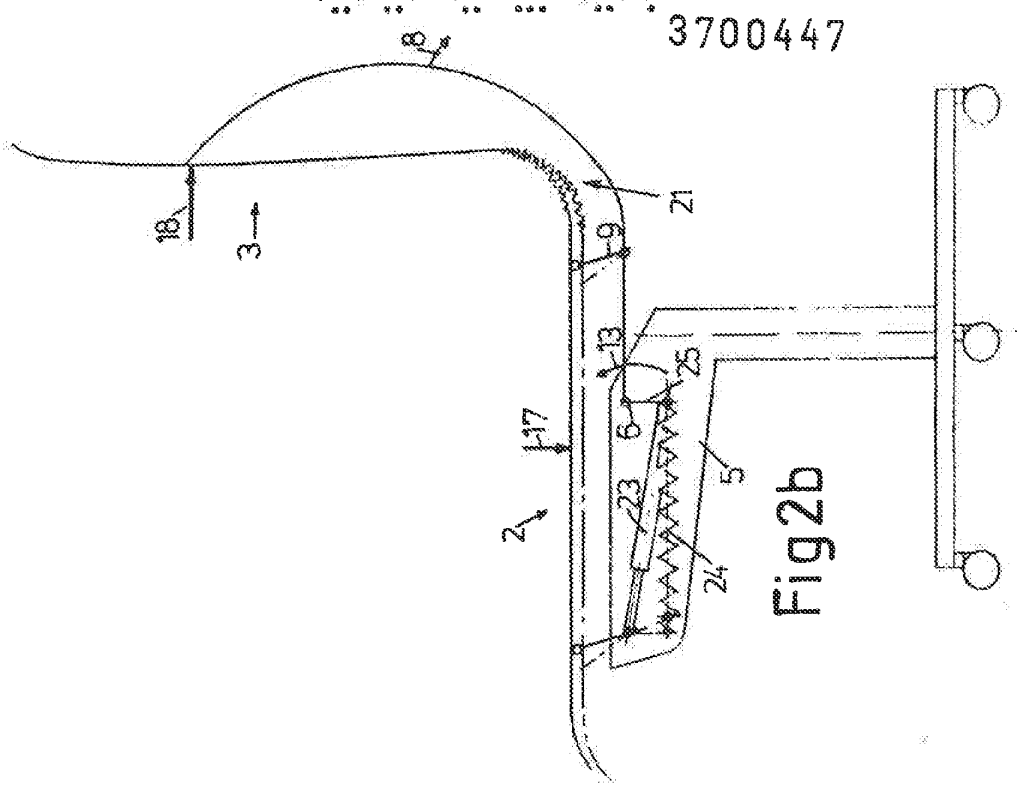

Fig2b

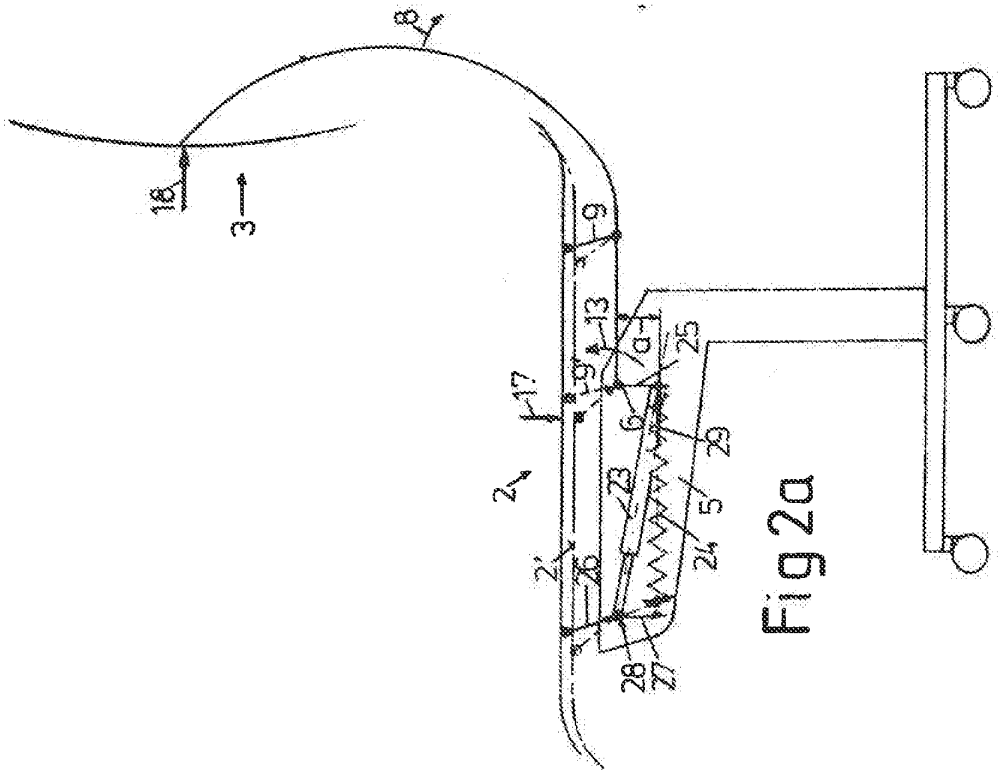

Fig2a

Patent Translate
Powered by EPO and Google

Notice

This translation is machine-generated. It cannot be guaranteed that it is intelligible, accurate, complete, reliable or fit for specific purposes. Critical decisions, such as commercially relevant or financial decisions, should not be based on machine-translation output.

DESCRIPTION DE3700447

The invention relates to a chair, especially office chair, chair o. The like., Comprising a. hinged to a seat support seat part and a preferably supported on a back support back part, the back tilt adjustment is made against an adjustable counterforce.

Seating, in particular office chairs, consist of a seat with this hinged backrest, the seat and / or backrest are adjustable in their inclination. Simple office chairs usually have only one, attached to a back support, height-adjustable backrest, which is optionally resiliently attached to the seat. Comfortable office chairs usually have continuous seat shells, which lead from the seating area into the back area, wherein the backrest is held and guided by a more or less complicated back support. From DE-AI 35 20 188 of the applicant such a seat mechanism is known. In the proposed application P 36 42 796.9 the construction is reproduced with a continuous seat, wherein between the seat part and back a flexible bending zone is present.

In the known chair geometries, it is provided that the adjustment of the backrest by an angle of approx. 5 DEG forward and approx. 15 DEG to the rear until 20 DEG. This happens in response to a downward movement and tilt adjustment of the seat part. The back tilt adjustment is carried out against the pressure of a biased by a manual adjustment back spring. The back pressure of the backrest can therefore be continuously adjusted by means of a handwheel o. The like. To provide an individual adaptation to the user. Thus, the back pressure of large and heavy people must be made stronger due to the larger body weight, as in light smaller persons.

The invention has for its object to provide an automatic adjustment of the reaction force of the back tilt adjustment depending on the user person.

This object is achieved on the basis of a chair of the introductory designating type according to the invention that the body weight of the user person on the burden of the seat part is detected and that the required leaning force for back tilt adjustment of the back part is adjusted depending on the weight of the user.

The measures listed in the dependent claims advantageous refinements and improvements of the main claim subject are specified.

The inventive seat, in particular office chair has the advantage over the known devices that an automatic adjustment of the counterforce of the backrest adjustment in dependence on the body weight of the user person takes place. This is based on the fundamental idea that the body weight is detected when the seat part is loaded and the counterforce of the back tilt adjustment of the back part can be regulated as a function of the body weight. In a lighter person, therefore, the counterforce of the back tilt adjustment is lower than in a heavy user person. A cumbersome handling on an adjusting wheel for adjusting the backrest counterforce is therefore not required.

According to the embodiment of the invention according to the dependent claims, the adaptation of the counter-force of the back part via a lever mechanism in conjunction with a spring, in particular a compression spring. The compression spring is compressed by the body weight, d. H. biased and the backrest adjustment is then against this preloaded spring. Preferably, the back support performs a rotational movement about a fixed pivot point on the seat support. This rotational movement counteracts the prestressed compression spring via a lever system. It is irrelevant how the spring is attached to the chair mechanism. The decisive factor is only the generation of a counter-torque against the back tilt adjustment in dependence on the

bias of the spring. Instead of a compression spring can with appropriate attachment or Linkage also a tension spring or torsion spring o. The like. Be used.

The variants listed in the dependent claims can therefore be supplemented by further inventive variants, in which a counter-torque against the back tilt adjustment of the back part is created as a function of the weight load.

Advantageous and expedient embodiments of the invention are illustrated in the drawing and explained in more detail in the following description. Show it

Fig. 1a) and b) the arrangement of a chair with a vertical compression spring and the seat part separated and continuous back and

Fig. 2a) and b) an arrangement with a horizontal compression spring with the seat part separated and continuous back part.

The seat (1) shown in Fig. 1a) consists of a seat part (2) and a back part (3), which is fastened via a back support (4) on the seat support (5).

The fixed bearing (6) forms the fulcrum for carrying out a back tilt adjustment of the backrest (3). This is usually done by approx. 5 DEG forward (arrow 7) and approx. 15 DEG to the rear by 20 ° (arrow 8). To carry out a point synchronous mechanism according to the publications mentioned in the introduction, the seat part (2) in its rear region with a connecting linkage (9) with the back support (4) connected such that a tilt adjustment of the backrest at the same time a tilt adjustment and downward movement of the seat part (2). In the front region, the seat part (2) is connected directly or indirectly via a connecting rod (10) to a fixed articulation point (11) on the seat carrier (5).

The tilt adjustment of the back part (3) to the rear (arrow 8) takes place about the pivot point of the fixed bearing (6). This results in a rotational movement of the back support (4) in a clockwise direction according to arrow (12). In order to generate a counterforce against the tilt adjustment of the backrest (3), a counter-torque according to arrow (13) must be generated around the pivot point (6). This can be done, for example, by a force acting upward on the back support force according to arrow (14). This could be done for example by a - possibly adjustable - compression spring. If the back support (4) is extended beyond the pivot point of the fixed bearing (6), a lever arm (15) is created on which a force directed from top to bottom (arrow 14 min) can also engage, in order to produce a counter-torque corresponding to the arrow (13) to create.

According to the invention, the counter-torque (arrow 13) is produced by arranging a compression spring (16) between the seat part (2) and the lever arm (15) which is preloaded by the weight of the user person (17) when the seat part (2) is loaded. The leaning force (18) against the back part (3) is therefore directly proportional to the weight (17) on the seat part (2). A high weight force (17) generates a large counter torque (13) and thus a larger leaning force (18) is required to perform the back tilt (arrow 8) and thus a rotational movement according to the arrow (12).

The arrangement of the spring (16) must always generate a counter torque according to arrow (13), wherein the weight force (17) generates a bias of the spring (16) in dependence of the body weight.

The selection of the compression spring (16) and the lever arm (a), d. H. the distance of the compression spring (16) to the pivot point (6) determine the size of the counter torque (13).

In Fig. 1a) is shown in phantom an alternative embodiment of the basic inventive concept. For this purpose, the weight (17) is transmitted as leverage (17 min) to a lever arm (15 min), which rotates about a fixed bearing (19) on the seat support (5). On the opposite lever arm (20), the compression spring (16 min) is mounted, which triggers an upward force (14) on the back support (4) in the sense of a counter-torque (13). In this case, the weight (17) is always decisive for the bias of the compression spring (16) or (16 min). The lever arms (15 min) and (20) are selected to produce the appropriate counter-torque (13).

An alternative embodiment of the invention is shown in Fig. 1b). Identical parts are provided with the same reference numerals. In a modification to FIG. 1 a), the back part (3) is connected to the seat part (2) in FIG. 1 b) via a bending zone (21) so that a continuous seat shell is formed. That around the fulcrum or Fixed bearing (6) lever system formed as an angle (15 min min) is formed consisting of an L-shaped angle at the lower horizontal leg (22), the compression spring (16) for generating the counter-torque (13) engages. The lever arm around the fulcrum (6) is marked with (a).

Between the on the seat support (5) fixed articulation point (11) and the one end of the leg (22) has a blocking element (23) is installed, which allows for the determination of the backrest adjustment in any desired position by the user. For the articulation of this blocking element (23), the lever arm (15 min min) is formed as an L-shaped angle.

The embodiments shown in FIGS. 2 a) and b) show a chair arrangement corresponding to FIGS. 1 a) and b). The arrangement of a compression spring (24) for generating a counter-torque (13) about the pivot point of the fixed bearing (6) is selected

horizontally. Here, the compression spring (24) engages on a pivot arm (25) angled from the pivot point (6) to generate a counter-torque (13) relative to the inclination adjustment (arrow 8).

The bias of the compression spring (24) by the weight (17) of the user person via a lever linkage (26, 27) about the pivot point (28), which coincide with the front stationary pivot point (11) coincide. Between the front benchmark or Pivot (28) and Hebelarmende (25) is in turn a blocking element (23) arranged to establish a particular back tilt.

In Fig. 2a) causes a weight force (17) rotational movement of the lever linkage (26, 27) about the pivot point (28) (see dashed line) and thus compression of the compression spring (24). The biasing force (29) produced thereby acts on the lever arm (25) with the lever arm (a) and generates a counter-torque corresponding to the arrow (13). The leaning force (18) against the back part (3) for generating a back tilt adjustment must therefore be the greater, the greater the weight (17), in order to overcome the counter-torque (13).

The representation in Fig. 2b) corresponds to that in Fig. 2a), but with a continuous seat shell with bending zone (21).

If, in FIGS. 1a) to 2b), the connecting linkage (9) is arranged between the seat part (2) and the back support (4), the chair executes a synchronous movement in the case of the back tilt adjustment, d. H. a tilt adjustment of the backrest has at the same time a tilt adjustment or Lowering of the seat part result. If this is not desired, the connecting linkage can also be arranged directly between the seat part (2) and the seat carrier (5), as shown in FIG. 2a) with the reference number (9 min).

In the figures, the lowered position of the seat part (2) is shown in dashed lines with reference numerals (2 min).

The invention is not limited to the illustrated embodiments. Rather, it also includes all professional training without own inventive content. In this case, it is always essential to generate a counter-torque dependent on the weight force (17) against the back inclination adjustment, wherein the counter-torque is generated by means of a spring force, be it compression spring, tension spring or torsion spring.

Patent Translate
Powered by EPO and Google

Notice

This translation is machine-generated. It cannot be guaranteed that it is intelligible, accurate, complete, reliable or fit for specific purposes. Critical decisions, such as commercially relevant or financial decisions, should not be based on machine-translation output.

CLAIMS DE3700447

1.

Seating, in particular office chair, chair o. The like., Comprising a, hinged to a seat support seat part and a preferably supported on a back support back part, the back tilt adjustment is made against an adjustable opposing force, characterized in that the body weight (17) of the user over the load of the seat part (2) can be detected and that the required leaning force (18) for the back tilt adjustment of the back part (3) is adjusted as a function of the weight force (17) of the user.

2.

Seating furniture according to claim 1, characterized in that the load of the seat part (2) as a result of the weight (17) entering seat part downward movement directly or via a lever linkage indirectly to a spring in the sense of a spring preload is transferable and that the spring is a counter torque (13) generated against the back tilt adjustment of the back carrier (4).

3.

Seating furniture according to claim 1 or 2, characterized in that the back support (4) on the seat support (5) via a fixed bearing (6) is articulated as a pivot bearing and that a compression spring (16, 24) via a lever arm (15, 25) has a counter-torque (13) around the pivot bearing (6) generated, wherein the lever arm (a) determines the size of the counter-torque (13) and thus the necessary pressing force (18) for back tilt adjustment of the backrest (3).

4.

Seating furniture according to one of claims 1 to 3, characterized in that a below the seat part (2) arranged vertical compression spring (16) on a to the fixed bearing (6) of the back carrier (4) rotating horizontal lever arm (15) at a distance (a), for generating a counter-torque (13) against the back tilt adjustment.

5.

Seating furniture according to one of claims 1 to 3, characterized in that the downward movement of the seat part (2) on a in the front region of the seat support (5) mounted lever linkage (26, 27) is transferable, that the tilting movement of the lever linkage (26, 27) around the fixed articulation point (28) causes a compression of the preferably transversely mounted compression spring (24), which at the rear, to the fulcrum of the fixed bearing (6) rotating lever arm (25) is supported.

6.

Seating furniture according to one or more of the preceding claims, characterized in that the seat part (2) via a bending zone (21) with the back part (3) is connected to form a continuous seat shell.

Electronic Acknowledgement Receipt

EFS ID:	34566915
Application Number:	15040735
International Application Number:	
Confirmation Number:	1083
Title of Invention:	APPARATUS WITH WEIGHT RESPONSIVE CHANGEABLE ADJUSTING CHARACTERISTICS
First Named Inventor/Applicant Name:	Aaron DeJule
Customer Number:	32116
Filer:	John Stirling Mortimer/Linda Bowen
Filer Authorized By:	John Stirling Mortimer
Attorney Docket Number:	DEJ10730P00071US
Receipt Date:	12-DEC-2018
Filing Date:	10-FEB-2016
Time Stamp:	16:38:38
Application Type:	Utility under 35 USC 111(a)

Payment information:

Submitted with Payment	no

File Listing:

Document Number	Document Description	File Name	File Size(Bytes)/ Message Digest	Multi Part /.zip	Pages (if appl.)
1	Transmittal Letter	15040735_IDS_Transmittal.pdf	34225 bdf744b1f248d7b0852cdffde05eba04493fc53a	no	1

Warnings:

Information:					
2	Information Disclosure Statement (IDS) Form (SB08)	15040735_IDS_SB08.PDF	1034277 4662ba5fcc56c176110463b5110d36d159e91c84	no	4
Warnings:					
Information:					
3	Foreign Reference	15040735_DE_3700447.pdf	832987 52b7c345079a16fd3726ae19ca978a1889e143b0	no	10
Warnings:					
Information:					
			Total Files Size (in bytes):	1901489	

This Acknowledgement Receipt evidences receipt on the noted date by the USPTO of the indicated documents, characterized by the applicant, and including page counts, where applicable. It serves as evidence of receipt similar to a Post Card, as described in MPEP 503.

<u>New Applications Under 35 U.S.C. 111</u>
If a new application is being filed and the application includes the necessary components for a filing date (see 37 CFR 1.53(b)-(d) and MPEP 506), a Filing Receipt (37 CFR 1.54) will be issued in due course and the date shown on this Acknowledgement Receipt will establish the filing date of the application.
<u>National Stage of an International Application under 35 U.S.C. 371</u>
If a timely submission to enter the national stage of an international application is compliant with the conditions of 35 U.S.C. 371 and other applicable requirements a Form PCT/DO/EO/903 indicating acceptance of the application as a national stage submission under 35 U.S.C. 371 will be issued in addition to the Filing Receipt, in due course.
<u>New International Application Filed with the USPTO as a Receiving Office</u>
If a new international application is being filed and the international application includes the necessary components for an international filing date (see PCT Article 11 and MPEP 1810), a Notification of the International Application Number and of the International Filing Date (Form PCT/RO/105) will be issued in due course, subject to prescriptions concerning national security, and the date shown on this Acknowledgement Receipt will establish the international filing date of the application.

IN THE UNITED STATES PATENT AND TRADEMARK OFFICE

Serial No.	:	15/040,735
Applicant	:	Aaron DeJule et al.
Filed	:	February 10, 2016
TC/A.U.	:	3636
Examiner	:	Timothy J. Brindley

Confirmation No.: 1083

Title	:	APPARATUS WITH WEIGHT RESPONSIVE CHANGEABLE ADJUSTABLE CHARACTERISTICS

Docket No.	:	DEJ10730P00071US
Customer No.	:	32116

Commissioner For Patents
P.O. Box 1450
Alexandria, Virginia 22313-1450

INFORMATION DISCLOSURE STATEMENT

Sir:

The attached citation form lists references which may be considered to be material to the above-identified application by the Patent Examiner. Entry into the record is respectfully requested.

Respectfully submitted,

By _____
John S. Mortimer, Reg. No. 30,407

Dated: Dec 12, 2018

WOOD, PHILLIPS, KATZ, CLARK & MORTIMER
500 West Madison Street, Suite 1130
Chicago, Illinois 60661
312/876-1800

UNITED STATES PATENT AND TRADEMARK OFFICE

UNITED STATES DEPARTMENT OF COMMERCE
United States Patent and Trademark Office
Address: COMMISSIONER FOR PATENTS
P.O. Box 1450
Alexandria, Virginia 22313-1450
www.uspto.gov

NOTICE OF ALLOWANCE AND FEE(S) DUE

32116 7590 01/02/2019
WOOD, PHILLIPS, KATZ, CLARK & MORTIMER
500 W. MADISON STREET
SUITE 1130
CHICAGO, IL 60661

EXAMINER
BRINDLEY, TIMOTHY J

ART UNIT	PAPER NUMBER
3636	

DATE MAILED: 01/02/2019

APPLICATION NO.	FILING DATE	FIRST NAMED INVENTOR	ATTORNEY DOCKET NO.	CONFIRMATION NO.
15/040,735	02/10/2016	Aaron DeJule	DEJ10730P00071US	1083

TITLE OF INVENTION: APPARATUS WITH WEIGHT RESPONSIVE CHANGEABLE ADJUSTING CHARACTERISTICS

APPLN. TYPE	ENTITY STATUS	ISSUE FEE DUE	PUBLICATION FEE DUE	PREV. PAID ISSUE FEE	TOTAL FEE(S) DUE	DATE DUE
nonprovisional	SMALL	$500	$0.00	$0.00	$500	04/02/2019

THE APPLICATION IDENTIFIED ABOVE HAS BEEN EXAMINED AND IS ALLOWED FOR ISSUANCE AS A PATENT. PROSECUTION ON THE MERITS IS CLOSED. THIS NOTICE OF ALLOWANCE IS NOT A GRANT OF PATENT RIGHTS. THIS APPLICATION IS SUBJECT TO WITHDRAWAL FROM ISSUE AT THE INITIATIVE OF THE OFFICE OR UPON PETITION BY THE APPLICANT. SEE 37 CFR 1.313 AND MPEP 1308.

THE ISSUE FEE AND PUBLICATION FEE (IF REQUIRED) MUST BE PAID WITHIN THREE MONTHS FROM THE MAILING DATE OF THIS NOTICE OR THIS APPLICATION SHALL BE REGARDED AS ABANDONED. THIS STATUTORY PERIOD CANNOT BE EXTENDED. SEE 35 U.S.C. 151. THE ISSUE FEE DUE INDICATED ABOVE DOES NOT REFLECT A CREDIT FOR ANY PREVIOUSLY PAID ISSUE FEE IN THIS APPLICATION. IF AN ISSUE FEE HAS PREVIOUSLY BEEN PAID IN THIS APPLICATION (AS SHOWN ABOVE), THE RETURN OF PART B OF THIS FORM WILL BE CONSIDERED A REQUEST TO REAPPLY THE PREVIOUSLY PAID ISSUE FEE TOWARD THE ISSUE FEE NOW DUE.

HOW TO REPLY TO THIS NOTICE:

I. Review the ENTITY STATUS shown above. If the ENTITY STATUS is shown as SMALL or MICRO, verify whether entitlement to that entity status still applies.

If the ENTITY STATUS is the same as shown above, pay the TOTAL FEE(S) DUE shown above.

If the ENTITY STATUS is changed from that shown above, on PART B - FEE(S) TRANSMITTAL, complete section number 5 titled "Change in Entity Status (from status indicated above)".

For purposes of this notice, small entity fees are 1/2 the amount of undiscounted fees, and micro entity fees are 1/2 the amount of small entity fees.

II. PART B - FEE(S) TRANSMITTAL, or its equivalent, must be completed and returned to the United States Patent and Trademark Office (USPTO) with your ISSUE FEE and PUBLICATION FEE (if required). If you are charging the fee(s) to your deposit account, section "4b" of Part B - Fee(s) Transmittal should be completed and an extra copy of the form should be submitted. If an equivalent of Part B is filed, a request to reapply a previously paid issue fee must be clearly made, and delays in processing may occur due to the difficulty in recognizing the paper as an equivalent of Part B.

III. All communications regarding this application must give the application number. Please direct all communications prior to issuance to Mail Stop ISSUE FEE unless advised to the contrary.

IMPORTANT REMINDER: Maintenance fees are due in utility patents issuing on applications filed on or after Dec. 12, 1980. It is patentee's responsibility to ensure timely payment of maintenance fees when due. More information is available at www.uspto.gov/PatentMaintenanceFees.

PART B - FEE(S) TRANSMITTAL

Complete and send this form, together with applicable fee(s), by mail or fax, or via EFS-Web.

By mail, send to: Mail Stop ISSUE FEE
Commissioner for Patents
P.O. Box 1450
Alexandria, Virginia 22313-1450

By fax, send to: (571)-273-2885

INSTRUCTIONS: This form should be used for transmitting the ISSUE FEE and PUBLICATION FEE (if required). Blocks 1 through 5 should be completed where appropriate. All further correspondence including the Patent, advance orders and notification of maintenance fees will be mailed to the current correspondence address as indicated unless corrected below or directed otherwise in Block 1, by (a) specifying a new correspondence address; and/or (b) indicating a separate "FEE ADDRESS" for maintenance fee notifications.

CURRENT CORRESPONDENCE ADDRESS (Note: Use Block 1 for any change of address)

32116 7590 01/02/2019
WOOD, PHILLIPS, KATZ, CLARK & MORTIMER
500 W. MADISON STREET
SUITE 1130
CHICAGO, IL 60661

Note: A certificate of mailing can only be used for domestic mailings of the Fee(s) Transmittal. This certificate cannot be used for any other accompanying papers. Each additional paper, such as an assignment or formal drawing, must have its own certificate of mailing or transmission.

Certificate of Mailing or Transmission

I hereby certify that this Fee(s) Transmittal is being deposited with the United States Postal Service with sufficient postage for first class mail in an envelope addressed to the Mail Stop ISSUE FEE address above, or being transmitted to the USPTO via EFS-Web or by facsimile to (571) 273-2885, on the date below.

(Typed or printed name)
(Signature)
(Date)

APPLICATION NO.	FILING DATE	FIRST NAMED INVENTOR	ATTORNEY DOCKET NO.	CONFIRMATION NO.
15/040,735	02/10/2016	Aaron DeJule	DEJ10730P00071US	1083

TITLE OF INVENTION: APPARATUS WITH WEIGHT RESPONSIVE CHANGEABLE ADJUSTING CHARACTERISTICS

APPLN. TYPE	ENTITY STATUS	ISSUE FEE DUE	PUBLICATION FEE DUE	PREV. PAID ISSUE FEE	TOTAL FEE(S) DUE	DATE DUE
nonprovisional	SMALL	$500	$0.00	$0.00	$500	04/02/2019

EXAMINER	ART UNIT	CLASS-SUBCLASS
BRINDLEY, TIMOTHY J	3636	297-300200

1. Change of correspondence address or indication of "Fee Address" (37 CFR 1.363).

❑ Change of correspondence address (or Change of Correspondence Address form PTO/SB/122) attached.

❑ "Fee Address" indication (or "Fee Address" Indication form PTO/SB/47; Rev 03-09 or more recent) attached. **Use of a Customer Number is required.**

2. For printing on the patent front page, list
(1) The names of up to 3 registered patent attorneys or agents OR, alternatively,
(2) The name of a single firm (having as a member a registered attorney or agent) and the names of up to 2 registered patent attorneys or agents. If no name is listed, no name will be printed.

1_____
2_____
3_____

3. ASSIGNEE NAME AND RESIDENCE DATA TO BE PRINTED ON THE PATENT (print or type)

PLEASE NOTE: Unless an assignee is identified below, no assignee data will appear on the patent. If an assignee is identified below, the document must have been previously recorded, or filed for recordation, as set forth in 37 CFR 3.11 and 37 CFR 3.81(a). Completion of this form is NOT a substitute for filing an assignment.

(A) NAME OF ASSIGNEE (B) RESIDENCE: (CITY and STATE OR COUNTRY)

Please check the appropriate assignee category or categories (will not be printed on the patent) : ❑ Individual ❑ Corporation or other private group entity ❑ Government

4a. Fees submitted: ❑Issue Fee ❑Publication Fee (if required) ❑Advance Order - # of Copies _____

4b. Method of Payment: *(Please first reapply any previously paid fee shown above)*

❑ Electronic Payment via EFS-Web ❑ Enclosed check ❑ Non-electronic payment by credit card (Attach form PTO-2038)

❑ The Director is hereby authorized to charge the required fee(s), any deficiency, or credit any overpayment to Deposit Account No. _____

5. **Change in Entity Status** (from status indicated above)

❑ Applicant certifying micro entity status. See 37 CFR 1.29

❑ Applicant asserting small entity status. See 37 CFR 1.27

❑ Applicant changing to regular undiscounted fee status.

NOTE: Absent a valid certification of Micro Entity Status (see forms PTO/SB/15A and 15B), issue fee payment in the micro entity amount will not be accepted at the risk of application abandonment.
NOTE: If the application was previously under micro entity status, checking this box will be taken to be a notification of loss of entitlement to micro entity status.
NOTE: Checking this box will be taken to be a notification of loss of entitlement to small or micro entity status, as applicable.

NOTE: This form must be signed in accordance with 37 CFR 1.31 and 1.33. See 37 CFR 1.4 for signature requirements and certifications.

Authorized Signature _____ Date _____

Typed or printed name _____ Registration No. _____

UNITED STATES PATENT AND TRADEMARK OFFICE

UNITED STATES DEPARTMENT OF COMMERCE
United States Patent and Trademark Office
Address: COMMISSIONER FOR PATENTS
P.O. Box 1450
Alexandria, Virginia 22313-1450
www.uspto.gov

APPLICATION NO.	FILING DATE	FIRST NAMED INVENTOR	ATTORNEY DOCKET NO.	CONFIRMATION NO.
15/040,735	02/10/2016	Aaron DeJule	DEJ10730P00071US	1083

32116 7590 01/02/2019
WOOD, PHILLIPS, KATZ, CLARK & MORTIMER
500 W. MADISON STREET
SUITE 1130
CHICAGO, IL 60661

EXAMINER
BRINDLEY, TIMOTHY J

ART UNIT	PAPER NUMBER
3636	

DATE MAILED: 01/02/2019

Determination of Patent Term Adjustment under 35 U.S.C. 154 (b)
(Applications filed on or after May 29, 2000)

The Office has discontinued providing a Patent Term Adjustment (PTA) calculation with the Notice of Allowance.

Section 1(h)(2) of the AIA Technical Corrections Act amended 35 U.S.C. 154(b)(3)(B)(i) to eliminate the requirement that the Office provide a patent term adjustment determination with the notice of allowance. See Revisions to Patent Term Adjustment, 78 Fed. Reg. 19416, 19417 (Apr. 1, 2013). Therefore, the Office is no longer providing an initial patent term adjustment determination with the notice of allowance. The Office will continue to provide a patent term adjustment determination with the Issue Notification Letter that is mailed to applicant approximately three weeks prior to the issue date of the patent, and will include the patent term adjustment on the patent. Any request for reconsideration of the patent term adjustment determination (or reinstatement of patent term adjustment) should follow the process outlined in 37 CFR 1.705.

Any questions regarding the Patent Term Extension or Adjustment determination should be directed to the Office of Patent Legal Administration at (571)-272-7702. Questions relating to issue and publication fee payments should be directed to the Customer Service Center of the Office of Patent Publication at 1-(888)-786-0101 or (571)-272-4200.

Notice Requiring Inventor's Oath or Declaration	Application No. 15/040,735	Applicant(s) Aaron DeJule	
	Examiner BRINDLEY, TIMOTHY J	Art Unit 3636	

This notice is an attachment to the Notice of Allowability (PTOL-37), or the Notice of Allowability For A Design Application (PTOL-37D).

An inventor's oath or declaration in compliance with 37 CFR 1.63 or 1.64 executed by or with respect to each inventor has not yet been submitted.

An oath or declaration in compliance with 37 CFR 1.63, or a substitute statement in compliance with 37 CFR 1.64, executed by or with respect to each inventor (for any inventor for which a compliant oath, declaration, or substitute statement has not yet been submitted) MUST be filed no later than the date on which the issue fee is paid. See 35 U.S.C. 115(f). Failure to timely comply will result in ABANDONMENT of this application.

A properly executed inventor's oath to declaration has not been received for the following inventor(s):

If applicant previously filed one or more oaths, declarations, or substitute statements, applicant may have received an informational notice regarding deficiencies therein.

The following deficiencies are noted:

INFORMAL ACTION PROBLEMS

- A properly executed inventor's oath or declaration has not been received for the following inventor(s): **Aaron DeJule**, **Scott Padiak**, and **Paul C. Evans**.
  Applicant may submit the inventor's oath or declaration at any time before the Notice of Allowance and Fee(s) Due, PTOL-85, is mailed.

Questions relating to this Notice should be directed to the Application Assistance Unit at 571-272-4200.

OMB Clearance and PRA Burden Statement for PTOL-85 Part B

The Paperwork Reduction Act (PRA) of 1995 requires Federal agencies to obtain Office of Management and Budget approval before requesting most types of information from the public. When OMB approves an agency request to collect information from the public, OMB (i) provides a valid OMB Control Number and expiration date for the agency to display on the instrument that will be used to collect the information and (ii) requires the agency to inform the public about the OMB Control Number's legal significance in accordance with 5 CFR 1320.5(b).

The information collected by PTOL-85 Part B is required by 37 CFR 1.311. The information is required to obtain or retain a benefit by the public which is to file (and by the USPTO to process) an application. Confidentiality is governed by 35 U.S.C. 122 and 37 CFR 1.14. This collection is estimated to take 30 minutes to complete, including gathering, preparing, and submitting the completed application form to the USPTO. Time will vary depending upon the individual case. Any comments on the amount of time you require to complete this form and/or suggestions for reducing this burden, should be sent to the Chief Information Officer, U.S. Patent and Trademark Office, U.S. Department of Commerce, P.O. Box 1450, Alexandria, Virginia 22313-1450. DO NOT SEND FEES OR COMPLETED FORMS TO THIS ADDRESS. SEND TO: Commissioner for Patents, P.O. Box 1450, Alexandria, Virginia 22313-1450. Under the Paperwork Reduction Act of 1995, no persons are required to respond to a collection of information unless it displays a valid OMB control number.

Privacy Act Statement

The Privacy Act of 1974 (P.L. 93-579) requires that you be given certain information in connection with your submission of the attached form related to a patent application or patent. Accordingly, pursuant to the requirements of the Act, please be advised that: (1) the general authority for the collection of this information is 35 U.S.C. 2(b)(2); (2) furnishing of the information solicited is voluntary; and (3) the principal purpose for which the information is used by the U.S. Patent and Trademark Office is to process and/or examine your submission related to a patent application or patent. If you do not furnish the requested information, the U.S. Patent and Trademark Office may not be able to process and/or examine your submission, which may result in termination of proceedings or abandonment of the application or expiration of the patent.

The information provided by you in this form will be subject to the following routine uses:

1. The information on this form will be treated confidentially to the extent allowed under the Freedom of Information Act (5 U.S.C. 552) and the Privacy Act (5 U.S.C 552a). Records from this system of records may be disclosed to the Department of Justice to determine whether disclosure of these records is required by the Freedom of Information Act.
2. A record from this system of records may be disclosed, as a routine use, in the course of presenting evidence to a court, magistrate, or administrative tribunal, including disclosures to opposing counsel in the course of settlement negotiations.
3. A record in this system of records may be disclosed, as a routine use, to a Member of Congress submitting a request involving an individual, to whom the record pertains, when the individual has requested assistance from the Member with respect to the subject matter of the record.
4. A record in this system of records may be disclosed, as a routine use, to a contractor of the Agency having need for the information in order to perform a contract. Recipients of information shall be required to comply with the requirements of the Privacy Act of 1974, as amended, pursuant to 5 U.S.C. 552a(m).
5. A record related to an International Application filed under the Patent Cooperation Treaty in this system of records may be disclosed, as a routine use, to the International Bureau of the World Intellectual Property Organization, pursuant to the Patent Cooperation Treaty.
6. A record in this system of records may be disclosed, as a routine use, to another federal agency for purposes of National Security review (35 U.S.C. 181) and for review pursuant to the Atomic Energy Act (42 U.S.C. 218(c)).
7. A record from this system of records may be disclosed, as a routine use, to the Administrator, General Services, or his/her designee, during an inspection of records conducted by GSA as part of that agency's responsibility to recommend improvements in records management practices and programs, under authority of 44 U.S.C. 2904 and 2906. Such disclosure shall be made in accordance with the GSA regulations governing inspection of records for this purpose, and any other relevant (i.e., GSA or Commerce) directive. Such disclosure shall not be used to make determinations about individuals.
8. A record from this system of records may be disclosed, as a routine use, to the public after either publication of the application pursuant to 35 U.S.C. 122(b) or issuance of a patent pursuant to 35 U.S.C. 151. Further, a record may be disclosed, subject to the limitations of 37 CFR 1.14, as a routine use, to the public if the record was filed in an application which became abandoned or in which the proceedings were terminated and which application is referenced by either a published application, an application open to public inspection or an issued patent.
9. A record from this system of records may be disclosed, as a routine use, to a Federal, State, or local law enforcement agency, if the USPTO becomes aware of a violation or potential violation of law or regulation.

Notice of Allowability	Application No. 15/040,735	Applicant(s) DeJule et al.	
	Examiner TIMOTHY J BRINDLEY	Art Unit 3636	AIA Status Yes

-- The MAILING DATE of this communication appears on the cover sheet with the correspondence address--

All claims being allowable, PROSECUTION ON THE MERITS IS (OR REMAINS) CLOSED in this application. If not included herewith (or previously mailed), a Notice of Allowance (PTOL-85) or other appropriate communication will be mailed in due course. **THIS NOTICE OF ALLOWABILITY IS NOT A GRANT OF PATENT RIGHTS.** This application is subject to withdrawal from issue at the initiative of the Office or upon petition by the applicant. See 37 CFR 1.313 and MPEP 1308.

1. ☑ This communication is responsive to 8/13/18.
   ☐ A declaration(s)/affidavit(s) under **37 CFR 1.130(b)** was/were filed on _____.

2. ☐ An election was made by the applicant in response to a restriction requirement set forth during the interview on _____; the restriction requirement and election have been incorporated into this action.

3. ☑ The allowed claim(s) is/are 1-22 . As a result of the allowed claim(s), you may be eligible to benefit from the **Patent Prosecution Highway** program at a participating intellectual property office for the corresponding application. For more information, please see **http://www.uspto.gov/patents/init_events/pph/index.jsp** or send an inquiry to **PPHfeedback@uspto.gov.**

4. ☐ Acknowledgment is made of a claim for foreign priority under 35 U.S.C. § 119(a)-(d) or (f).

   Certified copies:

   a) ☐ All b) ☐ Some *c) ☐ None of the:

   1. ☐ Certified copies of the priority documents have been received.
   2. ☐ Certified copies of the priority documents have been received in Application No. _____ .
   3. ☐ Copies of the certified copies of the priority documents have been received in this national stage application from the International Bureau (PCT Rule 17.2(a)).

   * Certified copies not received: _____ .

Applicant has THREE MONTHS FROM THE "MAILING DATE" of this communication to file areply complying with the requirements noted below. Failure to timely comply will result in ABANDONMENT of this application.
THIS THREE-MONTH PERIOD IS NOT EXTENDABLE.

5. ☐ CORRECTED DRAWINGS (as "replacement sheets") must be submitted.
   ☐ including changes required by the attached Examiner's Amendment / Comment or in the Office action of Paper No./Mail Date _____ .

   Identifying indicia such as the application number (see 37 CFR 1.84(c)) should be written on the drawings in the front (not the back) of each sheet. Replacement sheet(s) should be labeled as such in the header according to 37 CFR 1.121(d).

6. ☐ DEPOSIT OF and/or INFORMATION about the deposit of BIOLOGICAL MATERIAL must be submitted. Note the attached Examiner's comment regarding REQUIREMENT FOR THE DEPOSIT OF BIOLOGICAL MATERIAL.

Attachment(s)

1. ☐ Notice of References Cited (PTO-892)
2. ☑ Information Disclosure Statements (PTO/SB/08), Paper No./Mail Date 12/12/18.
3. ☐ Examiner's Comment Regarding Requirement for Deposit of Biological Material _____.
4. ☐ Interview Summary (PTO-413), Paper No./Mail Date. _____.
5. ☑ Examiner's Amendment/Comment
6. ☑ Examiner's Statement of Reasons for Allowance
7. ☐ Other _____.

/TIMOTHY J BRINDLEY/
Primary Examiner, Art Unit 3636

EXAMINER'S AMENDMENT

1. An examiner's amendment to the record appears below. Should the changes and/or additions be unacceptable to applicant, an amendment may be filed as provided by 37 CFR 1.312. To ensure consideration of such an amendment, it MUST be submitted no later than the payment of the issue fee.

Authorization for this examiner's amendment was given in an interview with John Mortimer on 12/18/18.

The application has been amended as follows:

Claim 1, lines 14 and 15, "the force being applied in the second manner required to reconfigure" has been changed to state: --the force required to be applied in the second manner to reconfigure--.

Allowable Subject Matter

2. Claims 1-22 are allowed.

3. The restriction requirement, as set forth in the Office action mailed on 1/17/18, has been reconsidered in view of the allowability of claims to the elected invention pursuant to MPEP § 821.04(a). **The restriction requirement is hereby withdrawn as to any claim that requires all the limitations of an allowable claim.** Claims 10-13 and 15-17 are no longer withdrawn from consideration because the claim(s) requires all the limitations of an allowable claim.

In view of the above noted withdrawal of the restriction requirement, applicant is advised that if any claim presented in a continuation or divisional application is anticipated by, or includes all the limitations of, a claim that is allowable in the present application, such claim may

be subject to provisional statutory and/or nonstatutory double patenting rejections over the claims of the instant application.

Once a restriction requirement is withdrawn, the provisions of 35 U.S.C. 121 are no longer applicable. See In re Ziegler, 443 F.2d 1211, 1215, 170 USPQ 129, 131-32 (CCPA 1971). See also MPEP § 804.01.

4. The following is an examiner's statement of reasons for allowance: Applicant's arguments submitted 8/13/18 are considered persuasive. It is additionally noted that the prior art of record also fails to show a second component movable by a user independently and in a different manner to a first weight bearing component which has a resistance to movement which is simultaneously adjusted based on the weight of the occupant being applied to the first component.

Any comments considered necessary by applicant must be submitted no later than the payment of the issue fee and, to avoid processing delays, should preferably accompany the issue fee. Such submissions should be clearly labeled "Comments on Statement of Reasons for Allowance."

Conclusion

5. Any inquiry concerning this communication or earlier communications from the examiner should be directed to TIMOTHY J BRINDLEY whose telephone number is (571)270-7231. The examiner can normally be reached on Mon-Fri, 9am-5pm.

Examiner interviews are available via telephone, in-person, and video conferencing using a USPTO supplied web-based collaboration tool. To schedule an interview, applicant is encouraged to use the USPTO Automated Interview Request (AIR) at http://www.uspto.gov/interviewpractice.

If attempts to reach the examiner by telephone are unsuccessful, the examiner's supervisor, David Dunn can be reached on 5712726670. The fax phone number for the organization where this application or proceeding is assigned is 571-273-8300.

Information regarding the status of an application may be obtained from the Patent Application Information Retrieval (PAIR) system. Status information for published applications may be obtained from either Private PAIR or Public PAIR. Status information for unpublished applications is available through Private PAIR only. For more information about the PAIR system, see http://pair-direct.uspto.gov. Should you have questions on access to the Private PAIR system, contact the Electronic Business Center (EBC) at 866-217-9197 (toll-free). If you would like assistance from a USPTO Customer Service Representative or access to the automated information system, call 800-786-9199 (IN USA OR CANADA) or 571-272-1000.

/TIMOTHY J BRINDLEY/
Primary Examiner, Art Unit 3636

Index of Claims	Application/Control No.	Applicant(s)/Patent Under Reexamination
	15/040,735	DeJule et al.
	Examiner	**Art Unit**
	TIMOTHY J BRINDLEY	3636

✓	Rejected	-	Cancelled	N	Non-Elected	A	Appeal
=	Allowed	÷	Restricted	I	Interference	O	Objected

CLAIMS

☐ Claims renumbered in the same order as presented by applicant ☐ CPA ☐ T.D. ☐ R.1.47

CLAIM		DATE								
Final	Original	06/21/2018	12/20/2018							
	1	✓	=							
	2	✓	=							
	3	✓	=							
	4	✓	=							
	5	✓	=							
	6	✓	=							
	7	✓	=							
	8	✓	=							
	9	✓	=							
	10	N	=							
	11	N	=							
	12	N	=							
	13	N	=							
	14	✓	=							
	15	N	=							
	16	N	=							
	17	N	=							
	18	✓	=							
	19	✓	=							
	20	✓	=							
	21		=							
	22		=							

Search Notes	Application/Control No.	Applicant(s)/Patent Under Reexamination
	15/040,735	DeJule et al.
	Examiner	**Art Unit**
	TIMOTHY J BRINDLEY	3636

CPC - Searched*		
Symbol	**Date**	**Examiner**
A47C7/445	06/21/2018	TJB
A47C7/441	06/21/2018	TJB
A47C1/03277	06/21/2018	TJB
A47C1/03266	06/21/2018	TJB

CPC Combination Sets - Searched*		
Symbol	**Date**	**Examiner**

US Classification - Searched*			
Class	**Subclass**	**Date**	**Examiner**

* See search history printout included with this form or the SEARCH NOTES box below to determine the scope of the search.

Search Notes		
Search Notes	**Date**	**Examiner**
Inventor Name Search	06/21/2018	TJB

Interference Search			
US Class/CPC Symbol	**US Subclass/CPC Group**	**Date**	**Examiner**
	PG-Pub Text Search - See Interference Search Printout		

/TIMOTHY J BRINDLEY/ Primary Examiner, Art Unit 3636	

Issue Classification	Application/Control No.	Applicant(s)/Patent Under Reexamination
	15/040,735	DeJule et al.
	Examiner	**Art Unit**
	TIMOTHY J BRINDLEY	3636

CPC

Symbol					Type	Version
A47C	/	7	/	445	F	2013-01-01
A47C	/	1	/	03266	I	2013-01-01
A47C	/	1	/	03277	I	2013-01-01
A47C	/	31	/	126	I	2013-01-01
A47C	/	7	/	441	I	2013-01-01
A47C	/	7	/	443	I	2013-01-01

CPC Combination Sets

Symbol					Type	Set	Ranking	Version
	/		/					

NONE (Assistant Examiner)	(Date)	**Total Claims Allowed:** 22	
/TIMOTHY J BRINDLEY/ Primary Examiner, Art Unit 3636 (Primary Examiner)	20 December 2018 (Date)	O.G. Print Claim(s) 1	O.G. Print Figure 2

U.S. Patent and Trademark Office

Part of Paper No.: 20181220

Issue Classification	Application/Control No.	Applicant(s)/Patent Under Reexamination
	15/040,735	DeJule et al.
	Examiner	**Art Unit**
	TIMOTHY J BRINDLEY	3636

INTERNATIONAL CLASSIFICATION				
CLAIMED				
A47C	/	7	/	44
A47C	/	1	/	032

NON-CLAIMED				
	/		/	

US ORIGINAL CLASSIFICATION	
CLASS	**SUBCLASS**

CROSS REFERENCES(S)						
CLASS	**SUBCLASS (ONE SUBCLASS PER BLOCK)**					

NONE (Assistant Examiner)	(Date)	**Total Claims Allowed:** 22	
/TIMOTHY J BRINDLEY/ Primary Examiner, Art Unit 3636 (Primary Examiner)	20 December 2018 (Date)	O.G. Print Claim(s) 1	O.G. Print Figure 2

U.S. Patent and Trademark Office

Part of Paper No.: 20181220

Issue Classification	Application/Control No.	Applicant(s)/Patent Under Reexamination
	15/040,735	DeJule et al.
	Examiner	**Art Unit**
	TIMOTHY J BRINDLEY	3636

☑ Claims renumbered in the same order as presented by applicant ☐ CPA ☐ T.D. ☐ R.1.47

CLAIMS

Final	Original	Final	Original	Final	Original	Final	Original	Final	Original	Final	Original	Final	Original	Final	Original

NONE		Total Claims Allowed:	
(Assistant Examiner)	(Date)	22	
/TIMOTHY J BRINDLEY/ Primary Examiner, Art Unit 3636	20 December 2018	O.G. Print Claim(s)	O.G. Print Figure
(Primary Examiner)	(Date)	1	2

U.S. Patent and Trademark Office Part of Paper No.: 20181220

EAST Search History

EAST Search History (Interference)

Ref #	Hits	Search Query	DBs	Default Operator	Plurals	Time Stamp
L3	42	(frame and (user or occupant) and weight and (component or backrest or seatback) and force and relative and (adjust or adjusting or adjustment)).clm.	US-PGPUB; USPAT	OR	OFF	2018/12/20 11:07
L4	109	(frame and (user or occupant) and weight and (component or backrest or seatback) and force and relative).clm.	US-PGPUB; USPAT	OR	OFF	2018/12/20 11:07

12/20/2018 11:07:28 AM
C:\Users\tbrindley\Documents\EAST\Workspaces\15040735.wsp

Doc code: IDS
Doc description: Information Disclosure Statement (IDS) Filed

PTO/SB/08a (02-18)
Approved for use through 11/30/2020. OMB 0651-0031
U.S. Patent and Trademark Office; U.S. DEPARTMENT OF COMMERCE
Under the Paperwork Reduction Act of 1995, no persons are required to respond to a collection of information unless it contains a valid OMB control number.

INFORMATION DISCLOSURE STATEMENT BY APPLICANT

(Not for submission under 37 CFR 1.99)

Application Number	15040735
Filing Date	2016-02-10
First Named Inventor	Aaron DeJule
Art Unit	3636
Examiner Name	Timothy J. Brindley
Attorney Docket Number	DEJ10730P00071US

U.S.PATENTS Remove

Examiner Initial*	Cite No	Patent Number	Kind Code[1]	Issue Date	Name of Patentee or Applicant of cited Document	Pages,Columns,Lines where Relevant Passages or Relevant Figures Appear
	1	4962962		1990-10-16	Machate et al.	
	2	8025334		2011-09-27	Schmitz et al.	

If you wish to add additional U.S. Patent citation information please click the Add button. Add

U.S.PATENT APPLICATION PUBLICATIONS Remove

Examiner Initial*	Cite No	Publication Number	Kind Code[1]	Publication Date	Name of Patentee or Applicant of cited Document	Pages,Columns,Lines where Relevant Passages or Relevant Figures Appear
	1					

If you wish to add additional U.S. Published Application citation information please click the Add button. Add

FOREIGN PATENT DOCUMENTS Remove

Examiner Initial*	Cite No	Foreign Document Number[3]	Country Code[2] i	Kind Code[4]	Publication Date	Name of Patentee or Applicant of cited Document	Pages,Columns,Lines where Relevant Passages or Relevant Figures Appear	T[5]
	1	37 00447	DE	A1	1987-01-09	VOKO		X

If you wish to add additional Foreign Patent Document citation information please click the Add button Add

NON-PATENT LITERATURE DOCUMENTS Remove

ALL REFERENCES CONSIDERED EXCEPT WHERE LINED THROUGH. /T.J.B/

INFORMATION DISCLOSURE STATEMENT BY APPLICANT (Not for submission under 37 CFR 1.99)		
	Application Number	15040735
	Filing Date	2016-02-10
	First Named Inventor	Aaron DeJule
	Art Unit	3636
	Examiner Name	Timothy J. Brindley
	Attorney Docket Number	DEJ10730P00071US

Examiner Initials*	Cite No	Include name of the author (in CAPITAL LETTERS), title of the article (when appropriate), title of the item (book, magazine, journal, serial, symposium, catalog, etc), date, pages(s), volume-issue number(s), publisher, city and/or country where published.	T[5]
	1		

If you wish to add additional non-patent literature document citation information please click the Add button Add

EXAMINER SIGNATURE

Examiner Signature	/TIMOTHY J BRINDLEY/	Date Considered	12/18/2018

*EXAMINER: Initial if reference considered, whether or not citation is in conformance with MPEP 609. Draw line through a citation if not in conformance and not considered. Include copy of this form with next communication to applicant.

[1] See Kind Codes of USPTO Patent Documents at www.USPTO.GOV or MPEP 901.04. [2] Enter office that issued the document, by the two-letter code (WIPO Standard ST.3). [3] For Japanese patent documents, the indication of the year of the reign of the Emperor must precede the serial number of the patent document. [4] Kind of document by the appropriate symbols as indicated on the document under WIPO Standard ST.16 if possible. [5] Applicant is to place a check mark here if English language translation is attached.

ALL REFERENCES CONSIDERED EXCEPT WHERE LINED THROUGH. /T.J.B/

INFORMATION DISCLOSURE STATEMENT BY APPLICANT (Not for submission under 37 CFR 1.99)		
	Application Number	15040735
	Filing Date	2016-02-10
	First Named Inventor	Aaron DeJule
	Art Unit	3636
	Examiner Name	Timothy J. Brindley
	Attorney Docket Number	DEJ10730P00071US

CERTIFICATION STATEMENT

Please see 37 CFR 1.97 and 1.98 to make the appropriate selection(s):

That each item of information contained in the information disclosure statement was first cited in any communication from a foreign patent office in a counterpart foreign application not more than three months prior to the filing of the information disclosure statement. See 37 CFR 1.97(e)(1).

OR

☒ That no item of information contained in the information disclosure statement was cited in a communication from a foreign patent office in a counterpart foreign application, and, to the knowledge of the person signing the certification after making reasonable inquiry, no item of information contained in the information disclosure statement was known to any individual designated in 37 CFR 1.56(c) more than three months prior to the filing of the information disclosure statement. See 37 CFR 1.97(e)(2).

See attached certification statement.

The fee set forth in 37 CFR 1.17 (p) has been submitted herewith.

A certification statement is not submitted herewith.

SIGNATURE

A signature of the applicant or representative is required in accordance with CFR 1.33, 10.18. Please see CFR 1.4(d) for the form of the signature.

Signature	/John S. Mortimer/	Date (YYYY-MM-DD)	2018-12-12
Name/Print	John S. Mortimer	Registration Number	30407

This collection of information is required by 37 CFR 1.97 and 1.98. The information is required to obtain or retain a benefit by the public which is to file (and by the USPTO to process) an application. Confidentiality is governed by 35 U.S.C. 122 and 37 CFR 1.14. This collection is estimated to take 1 hour to complete, including gathering, preparing and submitting the completed application form to the USPTO. Time will vary depending upon the individual case. Any comments on the amount of time you require to complete this form and/or suggestions for reducing this burden, should be sent to the Chief Information Officer, U.S. Patent and Trademark Office, U.S. Department of Commerce, P.O. Box 1450, Alexandria, VA 22313-1450. DO NOT SEND FEES OR COMPLETED FORMS TO THIS ADDRESS. **SEND TO: Commissioner for Patents, P.O. Box 1450, Alexandria, VA 22313-1450.**

ALL REFERENCES CONSIDERED EXCEPT WHERE LINED THROUGH. /T.J.B/

Privacy Act Statement

The Privacy Act of 1974 (P.L. 93-579) requires that you be given certain information in connection with your submission of the attached form related to a patent application or patent. Accordingly, pursuant to the requirements of the Act, please be advised that: (1) the general authority for the collection of this information is 35 U.S.C. 2(b)(2); (2) furnishing of the information solicited is voluntary; and (3) the principal purpose for which the information is used by the U.S. Patent and Trademark Office is to process and/or examine your submission related to a patent application or patent. If you do not furnish the requested information, the U.S. Patent and Trademark Office may not be able to process and/or examine your submission, which may result in termination of proceedings or abandonment of the application or expiration of the patent.

The information provided by you in this form will be subject to the following routine uses:

1. The information on this form will be treated confidentially to the extent allowed under the Freedom of Information Act (5 U.S.C. 552) and the Privacy Act (5 U.S.C. 552a). Records from this system of records may be disclosed to the Department of Justice to determine whether the Freedom of Information Act requires disclosure of these record s.

2. A record from this system of records may be disclosed, as a routine use, in the course of presenting evidence to a court, magistrate, or administrative tribunal, including disclosures to opposing counsel in the course of settlement negotiations.

3. A record in this system of records may be disclosed, as a routine use, to a Member of Congress submitting a request involving an individual, to whom the record pertains, when the individual has requested assistance from the Member with respect to the subject matter of the record.

4. A record in this system of records may be disclosed, as a routine use, to a contractor of the Agency having need for the information in order to perform a contract. Recipients of information shall be required to comply with the requirements of the Privacy Act of 1974, as amended, pursuant to 5 U.S.C. 552a(m).

5. A record related to an International Application filed under the Patent Cooperation Treaty in this system of records may be disclosed, as a routine use, to the International Bureau of the World Intellectual Property Organization, pursuant to the Patent Cooperation Treaty.

6. A record in this system of records may be disclosed, as a routine use, to another federal agency for purposes of National Security review (35 U.S.C. 181) and for review pursuant to the Atomic Energy Act (42 U.S.C. 218(c)).

7. A record from this system of records may be disclosed, as a routine use, to the Administrator, General Services, or his/her designee, during an inspection of records conducted by GSA as part of that agency's responsibility to recommend improvements in records management practices and programs, under authority of 44 U.S.C. 2904 and 2906. Such disclosure shall be made in accordance with the GSA regulations governing inspection of records for this purpose, and any other relevant (i.e., GSA or Commerce) directive. Such disclosure shall not be used to make determinations about individuals.

8. A record from this system of records may be disclosed, as a routine use, to the public after either publication of the application pursuant to 35 U.S.C. 122(b) or issuance of a patent pursuant to 35 U.S.C. 151. Further, a record may be disclosed, subject to the limitations of 37 CFR 1.14, as a routine use, to the public if the record was filed in an application which became abandoned or in which the proceedings were terminated and which application is referenced by either a published application, an application open to public inspections or an issued patent.

9. A record from this system of records may be disclosed, as a routine use, to a Federal, State, or local law enforcement agency, if the USPTO becomes aware of a violation or potential violation of law or regulation.

ALL REFERENCES CONSIDERED EXCEPT WHERE LINED THROUGH. /T.J.B/

IN THE UNITED STATES PATENT AND TRADEMARK OFFICE

In re Application of:	)	APPARATUS WITH WEIGHT RESPONSIVE CHANGEABLE ADJUSTABLE CHARACTERISTICS
AARON DEJULE et al.	)	
	)	Examiner: Timothy J. Brindley
Serial No. 15/040,735	)	Group Art Unit 3636
Filed: February 10, 2016	)	Confirmation No. 1083

COMMENTS ON STATEMENT OF REASONS FOR ALLOWANCE

Commissioner for Patents
P.O. Box 1450
Alexandria, VA 22313-1450

Sir:

In the Notice of Allowance mailed on January 2, 2019, the Examiner sets forth a Statement of Reasons for Allowance. In paragraph 4 on page 3 of the Notice of Allowance, the Examiner specifically identifies limitations not in the prior art.

It is respectfully submitted that the exact language referenced by the Examiner does not appear in the claims and allowability is based upon a combination of all limitations as recited in each claim.

Respectfully submitted,

WOOD, PHILLIPS, KATZ,
CLARK & MORTIMER

By _____
John S. Mortimer
Reg. No. 30,407

Dated: _____, 2019

500 West Madison Street
Suite 1130
Chicago, IL 60661-2562
(312) 876-2113

Electronic Acknowledgement Receipt

EFS ID:	34796501
Application Number:	15040735
International Application Number:	
Confirmation Number:	1083
Title of Invention:	APPARATUS WITH WEIGHT RESPONSIVE CHANGEABLE ADJUSTING CHARACTERISTICS
First Named Inventor/Applicant Name:	Aaron DeJule
Customer Number:	32116
Filer:	John Stirling Mortimer/Linda Bowen
Filer Authorized By:	John Stirling Mortimer
Attorney Docket Number:	DEJ10730P00071US
Receipt Date:	08-JAN-2019
Filing Date:	10-FEB-2016
Time Stamp:	17:17:19
Application Type:	Utility under 35 USC 111(a)

Payment information:

Submitted with Payment	no

File Listing:

Document Number	Document Description	File Name	File Size(Bytes)/ Message Digest	Multi Part /.zip	Pages (if appl.)
1	Post Allowance Communication - Incoming	15040735_Comments.pdf	39019 8ee80be6b3dd5ca6bcc8fc189673dc6466f49215	no	1

Warnings:

Information:	
Total Files Size (in bytes):	39019

This Acknowledgement Receipt evidences receipt on the noted date by the USPTO of the indicated documents, characterized by the applicant, and including page counts, where applicable. It serves as evidence of receipt similar to a Post Card, as described in MPEP 503.

New Applications Under 35 U.S.C. 111
If a new application is being filed and the application includes the necessary components for a filing date (see 37 CFR 1.53(b)-(d) and MPEP 506), a Filing Receipt (37 CFR 1.54) will be issued in due course and the date shown on this Acknowledgement Receipt will establish the filing date of the application.
National Stage of an International Application under 35 U.S.C. 371
If a timely submission to enter the national stage of an international application is compliant with the conditions of 35 U.S.C. 371 and other applicable requirements a Form PCT/DO/EO/903 indicating acceptance of the application as a national stage submission under 35 U.S.C. 371 will be issued in addition to the Filing Receipt, in due course.
New International Application Filed with the USPTO as a Receiving Office
If a new international application is being filed and the international application includes the necessary components for an international filing date (see PCT Article 11 and MPEP 1810), a Notification of the International Application Number and of the International Filing Date (Form PCT/RO/105) will be issued in due course, subject to prescriptions concerning national security, and the date shown on this Acknowledgement Receipt will establish the international filing date of the application.

UNITED STATES PATENT AND TRADEMARK OFFICE

UNITED STATES DEPARTMENT OF COMMERCE
United States Patent and Trademark Office
Address: COMMISSIONER FOR PATENTS
P.O. Box 1450
Alexandria, Virginia 22313-1450
www.uspto.gov

APPLICATION NO.	FILING DATE	FIRST NAMED INVENTOR	ATTORNEY DOCKET NO.	CONFIRMATION NO.
15/040,735	02/10/2016	Aaron DeJule	DEJ10730P00071US	1083

EXAMINER
BRINDLEY, TIMOTHY J

ART UNIT	PAPER NUMBER
3636	

NOTIFICATION DATE	DELIVERY MODE
01/11/2019	ELECTRONIC

7590 01/11/2019
WOOD, PHILLIPS, KATZ, CLARK & MORTIMER
500 W. MADISON STREET
SUITE 1130
CHICAGO, IL 60661

Letter Withdrawing a Notice Requiring Inventor's Oath or Declaration

The Notice Requiring Inventor's Oath or Declaration mailed on 1/2/19 was sent in error, and is hereby withdrawn. The time period set forth in the Notice of Allowance and Fee(s) Due to file a reply and pay the required fees continues to run from the mailing date of the Notice of Allowance and Fee(s) Due. Any time period set forth in the Notice of Allowability continues to run from the mailing date of the Notice of Allowability.

Questions relating to this Notice should be directed to the Application Assistance Unit at 571-272-4200.

Wandam. Barnes
(571)-272-4200 or 1(888)-786-0101
Patent Publication Branch
Office of Data Management

UNITED STATES PATENT AND TRADEMARK OFFICE

UNITED STATES DEPARTMENT OF COMMERCE
United States Patent and Trademark Office
Address: COMMISSIONER FOR PATENTS
P.O. Box 1450
Alexandria, Virginia 22313-1450
www.uspto.gov

APPLICATION NO.	FILING DATE	FIRST NAMED INVENTOR	ATTORNEY DOCKET NO.	CONFIRMATION NO.
15/040,735	02/10/2016	Aaron DeJule	DEJ10730P00071US	1083

32116 7590 01/29/2019
WOOD, PHILLIPS, KATZ, CLARK & MORTIMER
500 W. MADISON STREET
SUITE 1130
CHICAGO, IL 60661

EXAMINER
BRINDLEY, TIMOTHY J

ART UNIT	PAPER NUMBER
3636	

NOTIFICATION DATE	DELIVERY MODE
01/29/2019	ELECTRONIC

Please find below and/or attached an Office communication concerning this application or proceeding.

The time period for reply, if any, is set in the attached communication.

Notice of the Office communication was sent electronically on above-indicated "Notification Date" to the following e-mail address(es):

docketing@woodphillips.com

PTOL-90A (Rev. 04/07)

UNITED STATES PATENT AND TRADEMARK OFFICE

Commissioner for Patents
United States Patent and Trademark Office
P.O. Box 1450
Alexandria, VA 22313-1450
www.uspto.gov

Application No. : 15040735
Applicant : DeJule
Filing Date : 02/10/2016
Date Mailed : 01/29/2019

NOTICE TO FILE CORRECTED APPLICATION PAPERS

Notice of Allowance Mailed

This application has been accorded an Allowance Date and is being prepared for issuance. The application, however, is incomplete for the reasons below.

Applicant is given two (2) months from the mail date of this Notice within which to respond. This time period for reply is extendable under 37 CFR 1.136(a) for only TWO additional MONTHS.

The informalities requiring correction are indicated in the attachment(s). If the informality pertains to the abstract, specification (including claims) or drawings, the informality must be corrected with an amendment in compliance with 37 CFR 1.121 (or, if the application is a reissue application, 37 CFR 1.173). Such an amendment may be filed after payment of the issue fee if limited to correction of informalities noted herein. See Waiver of 37 CFR 1.312 for Documents Required by the Office of Patent Publication, 1280 Off. Gaz. Patent Office 918 (March 23, 2004). In addition, if the informality is not corrected until after payment of the issue fee, for purposes of 35 U.S.C. 154(b)(1)(iv), "all outstanding requirements" will be considered to have been satisfied when the informality has been corrected. A failure to respond within the above-identified time period will result in the application being ABANDONED.

See attachment(s).

A copy of this notice MUST be returned with the reply. Please address response to "Mail Stop Issue Fee, Commissioner for Patents, P.O. Box 1450, Alexandria, VA 22313-1450".

/Joanna Black/
Publication Branch
Office of Data Management
(571) 272-4200

Application No. 15040735

IDENTIFICATION OF SPECIFICATION/DRAWING INCONSISTENCIES

☐ On Page of the specification there is a brief description of FIG. , but the drawings filed do not include a drawing with that designation. Applicant must respond either by supplying the omitted drawing or by amending the specification to remove all references to that drawing.

☒ The drawings filed 02/10/2016 include FIG. 18, but the specification's brief description of the drawings does not describe a drawing with that designation. Applicant must respond either by amending the specification to add a brief description of that drawing or by correcting the drawings to remove the drawing in question.

☐ In the utility application, drawings are present in the application and are referred to in the detailed description of the invention, but the specification does not contain a brief description of the several views as required by 37 CFR 1.74 and 37 CFR 1.77(b)(9).

☐ The design application does not contain a description of the figure or figures of the drawing as required by 37 CFR 1.153(a) and 37 CFR 1.154(b)(4).

☐ In the plant application, the specification does not contain a brief description of the drawing as required by 37 CFR 1.163(c)(8).

☐ Page of the specification refers to FIG. , but no drawing with that designation is described in the brief description of the drawings and no drawing with that designation is present in the application. Applicant must respond either by amending the specification to remove all references to that drawing, or by supplying that drawing and amending the specification to add a brief description of it.

☐ In the reissue application, FIG. , is labeled as "New" but is not described in the reissue specification's brief description of the drawings. Applicant must respond by amending the reissue specification's brief description of the drawings to add a brief description of the new drawing.

☐ OTHER:

☐ COMMENTS:

PTO/AIA/01 (06-12)
Approved for use through 01/31/2014. OMB 0651-0032
U.S. Patent and Trademark Office; U.S. DEPARTMENT OF COMMERCE
Under the Paperwork Reduction Act of 1995, no persons are required to respond to a collection of information unless it displays a valid OMB control number.

DECLARATION (37 CFR 1.63) FOR UTILITY OR DESIGN APPLICATION USING AN APPLICATION DATA SHEET (37 CFR 1.76)

Title of Invention	APPARATUS WITH WEIGHT RESPONSIVE CHANGEABLE ADJUSTING CHARACTERISTICS

As the below named inventor, I hereby declare that:

This declaration is directed to:

☐ The attached application, or

☒ United States application or PCT international application number 15/040,735

filed on February 10, 2016.

The above-identified application was made or authorized to be made by me.

I believe that I am the original inventor or an original joint inventor of a claimed invention in the application.

I hereby acknowledge that any willful false statement made in this declaration is punishable under 18 U.S.C. 1001 by fine or imprisonment of not more than five (5) years, or both.

WARNING:

Petitioner/applicant is cautioned to avoid submitting personal information in documents filed in a patent application that may contribute to identity theft. Personal information such as social security numbers, bank account numbers, or credit card numbers (other than a check or credit card authorization form PTO-2038 submitted for payment purposes) is never required by the USPTO to support a petition or an application. If this type of personal information is included in documents submitted to the USPTO, petitioners/applicants should consider redacting such personal information from the documents before submitting them to the USPTO. Petitioner/applicant is advised that the record of a patent application is available to the public after publication of the application (unless a non-publication request in compliance with 37 CFR 1.213(a) is made in the application) or issuance of a patent. Furthermore, the record from an abandoned application may also be available to the public if the application is referenced in a published application or an issued patent (see 37 CFR 1.14). Checks and credit card authorization forms PTO-2038 submitted for payment purposes are not retained in the application file and therefore are not publicly available.

LEGAL NAME OF INVENTOR

Inventor: Paul C. Evans Date (Optional): _____

Signature: _____

Note: An application data sheet (PTO/SB/14 or equivalent), including naming the entire inventive entity, must accompany this form or must have been previously filed. Use an additional PTO/AIA/01 form for each additional inventor.

This collection of information is required by 35 U.S.C. 115 and 37 CFR 1.63. The information is required to obtain or retain a benefit by the public which is to file (and by the USPTO to process) an application. Confidentiality is governed by 35 U.S.C. 122 and 37 CFR 1.11 and 1.14. This collection is estimated to take 1 minute to complete, including gathering, preparing, and submitting the completed application form to the USPTO. Time will vary depending upon the individual case. Any comments on the amount of time you require to complete this form and/or suggestions for reducing this burden, should be sent to the Chief Information Officer, U.S. Patent and Trademark Office, U.S. Department of Commerce, P.O. Box 1450, Alexandria, VA 22313-1450. DO NOT SEND FEES OR COMPLETED FORMS TO THIS ADDRESS. **SEND TO: Commissioner for Patents, P.O. Box 1450, Alexandria, VA 22313-1450.**

If you need assistance in completing the form, call 1-800-PTO-9199 and select option 2.

PTO/AIA/01 (06-12)
Approved for use through 01/31/2014. OMB 0651-0032
U.S. Patent and Trademark Office; U.S. DEPARTMENT OF COMMERCE
Under the Paperwork Reduction Act of 1995, no persons are required to respond to a collection of information unless it displays a valid OMB control number

DECLARATION (37 CFR 1.63) FOR UTILITY OR DESIGN APPLICATION USING AN APPLICATION DATA SHEET (37 CFR 1.76)

Title of Invention	APPARATUS WITH WEIGHT RESPONSIVE CHANGEABLE ADJUSTING CHARACTERISTICS

As the below named inventor, I hereby declare that:

This declaration is directed to: ☐ The attached application, or

☒ United States application or PCT international application number 15/040,735

filed on February 10, 2016

The above-identified application was made or authorized to be made by me.

I believe that I am the original inventor or an original joint inventor of a claimed invention in the application.

I hereby acknowledge that any willful false statement made in this declaration is punishable under 18 U.S.C. 1001 by fine or imprisonment of not more than five (5) years, or both.

WARNING:

Petitioner/applicant is cautioned to avoid submitting personal information in documents filed in a patent application that may contribute to identity theft. Personal information such as social security numbers, bank account numbers, or credit card numbers (other than a check or credit card authorization form PTO-2038 submitted for payment purposes) is never required by the USPTO to support a petition or an application. If this type of personal information is included in documents submitted to the USPTO, petitioners/applicants should consider redacting such personal information from the documents before submitting them to the USPTO. Petitioner/applicant is advised that the record of a patent application is available to the public after publication of the application (unless a non-publication request in compliance with 37 CFR 1.213(a) is made in the application) or issuance of a patent. Furthermore, the record from an abandoned application may also be available to the public if the application is referenced in a published application or an issued patent (see 37 CFR 1.14). Checks and credit card authorization forms PTO-2038 submitted for payment purposes are not retained in the application file and therefore are not publicly available.

LEGAL NAME OF INVENTOR

Inventor: Scott Padiak Date (Optional): _____

Signature: Scott Padiak

Note: An application data sheet (PTO/SB/14 or equivalent), including naming the entire inventive entity, must accompany this form or must have been previously filed. Use an additional PTO/AIA/01 form for each additional inventor.

This collection of information is required by 35 U.S.C. 115 and 37 CFR 1.63. The information is required to obtain or retain a benefit by the public which is to file (and by the USPTO to process) an application. Confidentiality is governed by 35 U.S.C. 122 and 37 CFR 1.11 and 1.14. This collection is estimated to take 1 minute to complete, including gathering, preparing, and submitting the completed application form to the USPTO. Time will vary depending upon the individual case. Any comments on the amount of time you require to complete this form and/or suggestions for reducing this burden, should be sent to the Chief Information Officer, U.S. Patent and Trademark Office, U.S. Department of Commerce, P.O. Box 1450, Alexandria, VA 22313-1450. DO NOT SEND FEES OR COMPLETED FORMS TO THIS ADDRESS. SEND TO: Commissioner for Patents, P.O. Box 1450, Alexandria, VA 22313-1450.
If you need assistance in completing the form, call 1-800-PTO-9199 and select option 2.

PTO/AIA/01 (06-12)
Approved for use through 01/31/2014. OMB 0651-0032
U.S. Patent and Trademark Office; U.S. DEPARTMENT OF COMMERCE
Under the Paperwork Reduction Act of 1995, no persons are required to respond to a collection of information unless it displays a valid OMB control number.

DECLARATION (37 CFR 1.63) FOR UTILITY OR DESIGN APPLICATION USING AN APPLICATION DATA SHEET (37 CFR 1.76)

Title of Invention	APPARATUS WITH WEIGHT RESPONSIVE CHANGEABLE ADJUSTING CHARACTERISTICS

As the below named inventor, I hereby declare that:

This declaration is directed to:

☐ The attached application, or

☒ United States application or PCT international application number 15/040,735

filed on February 10, 2016

The above-identified application was made or authorized to be made by me.

I believe that I am the original inventor or an original joint inventor of a claimed invention in the application.

I hereby acknowledge that any willful false statement made in this declaration is punishable under 18 U.S.C. 1001 by fine or imprisonment of not more than five (5) years, or both.

WARNING:

Petitioner/applicant is cautioned to avoid submitting personal information in documents filed in a patent application that may contribute to identity theft. Personal information such as social security numbers, bank account numbers, or credit card numbers (other than a check or credit card authorization form PTO-2038 submitted for payment purposes) is never required by the USPTO to support a petition or an application. If this type of personal information is included in documents submitted to the USPTO, petitioners/applicants should consider redacting such personal information from the documents before submitting them to the USPTO. Petitioner/applicant is advised that the record of a patent application is available to the public after publication of the application (unless a non-publication request in compliance with 37 CFR 1.213(a) is made in the application) or issuance of a patent. Furthermore, the record from an abandoned application may also be available to the public if the application is referenced in a published application or an issued patent (see 37 CFR 1.14). Checks and credit card authorization forms PTO-2038 submitted for payment purposes are not retained in the application file and therefore are not publicly available.

LEGAL NAME OF INVENTOR

Inventor: Aaron DeJule Date (Optional) _____

Signature: _____

Note: An application data sheet (PTO/SB/14 or equivalent), including naming the entire inventive entity, must accompany this form or must have been previously filed. Use an additional PTO/AIA/01 form for each additional inventor.

This collection of information is required by 35 U.S.C. 115 and 37 CFR 1.63. The information is required to obtain or retain a benefit by the public which is to file (and by the USPTO to process) an application. Confidentiality is governed by 35 U.S.C. 122 and 37 CFR 1.11 and 1.14. This collection is estimated to take 1 minute to complete, including gathering, preparing, and submitting the completed application form to the USPTO. Time will vary depending upon the individual case. Any comments on the amount of time you require to complete this form and/or suggestions for reducing this burden, should be sent to the Chief Information Officer, U.S. Patent and Trademark Office, U.S. Department of Commerce, P.O. Box 1450, Alexandria, VA 22313-1450. DO NOT SEND FEES OR COMPLETED FORMS TO THIS ADDRESS. **SEND TO: Commissioner for Patents, P.O. Box 1450, Alexandria, VA 22313-1450.**

If you need assistance in completing the form, call 1-800-PTO-9199 and select option 2.

IN THE UNITED STATES PATENT AND TRADEMARK OFFICE

In re Application of:	)	APPARATUS WITH WEIGHT RESPONSIVE CHANGEABLE ADJUSTING CHARACTERISTICS
AARON DeJULE et al.	)	
	)	Examiner:
Serial No. 15/040,735	)	Group Art Unit 3636
Filed: February 10, 2016	)	Confirmation No. 1083

RESPONSE TO NOTICE REQUIRING INVENTOR'S OATH OR DECLARATION

Commissioner for Patents
P.O. Box 1450
Alexandria, VA 22313-1450

Sir:

In response to the Notice Requiring Inventor's Oath or Declaration which was attached to the Notice of Allowability mailed on January 2, 2019, enclosed herewith are Declarations executed by the inventors. We note that this is a duplicate submission, as the Declarations were previously filed with the USPTO on November 16, 2017.

The fee for late submission of the Declarations was paid on February 10, 2016. Therefore, no fee will be paid with this submission.

Respectfully submitted,
WOOD, PHILLIPS, KATZ,
CLARK & MORTIMER

By /John S. Mortimer/
John S. Mortimer
Reg. No. 30,407

Dated: February 11, 2019
500 West Madison Street
Suite 1130
Chicago, IL 60661
(312) 876-2113

Electronic Acknowledgement Receipt

EFS ID:	35114512
Application Number:	15040735
International Application Number:	
Confirmation Number:	1083
Title of Invention:	APPARATUS WITH WEIGHT RESPONSIVE CHANGEABLE ADJUSTING CHARACTERISTICS
First Named Inventor/Applicant Name:	Aaron DeJule
Customer Number:	32116
Filer:	John Stirling Mortimer/Linda Bowen
Filer Authorized By:	John Stirling Mortimer
Attorney Docket Number:	DEJ10730P00071US
Receipt Date:	11-FEB-2019
Filing Date:	10-FEB-2016
Time Stamp:	15:16:50
Application Type:	Utility under 35 USC 111(a)

Payment information:

Submitted with Payment	no

File Listing:

Document Number	Document Description	File Name	File Size(Bytes)/ Message Digest	Multi Part /.zip	Pages (if appl.)
1		15040735_Response_Decl.pdf	314952 f114a3dcb10db2df1ae671e665e70dacb084e7ef	yes	4

	Multipart Description/PDF files in .zip description		
	Document Description	**Start**	**End**
	Oath or Declaration filed	4	4
	Oath or Declaration filed	3	3
	Oath or Declaration filed	2	2
	Post Allowance Communication - Incoming	1	1

Warnings:

Information:

Total Files Size (in bytes):	314952

This Acknowledgement Receipt evidences receipt on the noted date by the USPTO of the indicated documents, characterized by the applicant, and including page counts, where applicable. It serves as evidence of receipt similar to a Post Card, as described in MPEP 503.

<u>New Applications Under 35 U.S.C. 111</u>
If a new application is being filed and the application includes the necessary components for a filing date (see 37 CFR 1.53(b)-(d) and MPEP 506), a Filing Receipt (37 CFR 1.54) will be issued in due course and the date shown on this Acknowledgement Receipt will establish the filing date of the application.
<u>National Stage of an International Application under 35 U.S.C. 371</u>
If a timely submission to enter the national stage of an international application is compliant with the conditions of 35 U.S.C. 371 and other applicable requirements a Form PCT/DO/EO/903 indicating acceptance of the application as a national stage submission under 35 U.S.C. 371 will be issued in addition to the Filing Receipt, in due course.
<u>New International Application Filed with the USPTO as a Receiving Office</u>
If a new international application is being filed and the international application includes the necessary components for an international filing date (see PCT Article 11 and MPEP 1810), a Notification of the International Application Number and of the International Filing Date (Form PCT/RO/105) will be issued in due course, subject to prescriptions concerning national security, and the date shown on this Acknowledgement Receipt will establish the international filing date of the application.

Electronic Acknowledgement Receipt

EFS ID:	35114786
Application Number:	15040735
International Application Number:	
Confirmation Number:	1083
Title of Invention:	APPARATUS WITH WEIGHT RESPONSIVE CHANGEABLE ADJUSTING CHARACTERISTICS
First Named Inventor/Applicant Name:	Aaron DeJule
Customer Number:	32116
Filer:	John Stirling Mortimer/Linda Bowen
Filer Authorized By:	John Stirling Mortimer
Attorney Docket Number:	DEJ10730P00071US
Receipt Date:	11-FEB-2019
Filing Date:	10-FEB-2016
Time Stamp:	15:25:58
Application Type:	Utility under 35 USC 111(a)

Payment information:

Submitted with Payment	no

File Listing:

Document Number	Document Description	File Name	File Size(Bytes)/ Message Digest	Multi Part /.zip	Pages (if appl.)
1		15040735_Response_Notice_312Amdt.pdf	217364 4ef6fab7a366b7045a74a9a53985b72b7e57520c	yes	6

	Multipart Description/PDF files in .zip description		
	Document Description	**Start**	**End**
	Amendment after Notice of Allowance (Rule 312)	4	6
	Post Allowance Communication - Incoming	1	3

Warnings:

Information:

Total Files Size (in bytes):	217364

This Acknowledgement Receipt evidences receipt on the noted date by the USPTO of the indicated documents, characterized by the applicant, and including page counts, where applicable. It serves as evidence of receipt similar to a Post Card, as described in MPEP 503.

<u>New Applications Under 35 U.S.C. 111</u>
If a new application is being filed and the application includes the necessary components for a filing date (see 37 CFR 1.53(b)-(d) and MPEP 506), a Filing Receipt (37 CFR 1.54) will be issued in due course and the date shown on this Acknowledgement Receipt will establish the filing date of the application.
<u>National Stage of an International Application under 35 U.S.C. 371</u>
If a timely submission to enter the national stage of an international application is compliant with the conditions of 35 U.S.C. 371 and other applicable requirements a Form PCT/DO/EO/903 indicating acceptance of the application as a national stage submission under 35 U.S.C. 371 will be issued in addition to the Filing Receipt, in due course.
<u>New International Application Filed with the USPTO as a Receiving Office</u>
If a new international application is being filed and the international application includes the necessary components for an international filing date (see PCT Article 11 and MPEP 1810), a Notification of the International Application Number and of the International Filing Date (Form PCT/RO/105) will be issued in due course, subject to prescriptions concerning national security, and the date shown on this Acknowledgement Receipt will establish the international filing date of the application.

IN THE UNITED STATES PATENT AND TRADEMARK OFFICE

In re Application of:	)	APPARATUS WITH WEIGHT RESPONSIVE CHANGEABLE ADJUSTABLE CHARACTERISTICS
AARON DEJULE et al.	)	
	)	Examiner: Timothy J. Brindley
Serial No. 15/040,735	)	
	)	Group Art Unit 3636
Filed: February 10, 2016	)	
	)	Confirmation No. 1083

AMENDMENT UNDER RULE 312

Commissioner for Patents
P.O. Box 1450
Alexandria, VA 22313-1450

Sir:

Responsive to Notice to File Corrected Application Papers, dated January 29, 2019, please amend the above-identified application as indicated below.

Amendments to the Specification begin on page **2** of this paper.

Remarks begin on page **3** of this paper.

AMENDMENTS TO THE SPECIFICATION:

On page 8, paragraph [0039], please amend as follows:

Figs. 7-16 are partially schematic representations of apparatus incorporating different forms of adjusting assemblies, according to the invention; [[and]]

On page 9, paragraph [0040], please amend as follows:

Fig. 17 is a schematic representation of a further modified form of reconfigurable apparatus, according to the present invention; and

Fig. 18 is a schematic representation of adjusting assemblies, according to the invention, acting between separate components on a frame.

REMARKS

The specification has been amended herein to correct the informalities noted in the Notice to File Corrected Application Papers. Specifically, the Brief Description of the Drawings has been amended to include a description of Fig. 18.

Entry to the record is requested.

Respectfully submitted,

WOOD, PHILLIPS, KATZ,
CLARK & MORTIMER

By _____
John S. Mortimer
Reg. No. 30,407

Dated: Feb 11, 2019

500 West Madison Street
Suite 1130
Chicago, IL 60661-2562
(312) 876-2113

IN THE UNITED STATES PATENT AND TRADEMARK OFFICE

In re Application of:	)	APPARATUS WITH WEIGHT RESPONSIVE CHANGEABLE ADJUSTABLE CHARACTERISTICS
AARON DEJULE et al.	)	
	)	Examiner: Timothy J. Brindley
Serial No. 15/040,735	)	Group Art Unit 3636
Filed: February 10, 2016	)	Confirmation No. 1083

RESPONSE TO NOTICE TO FILE CORRECTED APPLICATION PAPERS

Commissioner for Patents
P.O. Box 1450
Alexandria, VA 22313-1450

Sir:

This is a response to the Notice to File Corrected Application Papers mailed on January 29, 2019.

In response to that Notice, Applicant is submitting the attached Amendment, which adds a brief description of Fig. 18. Since Fig. 18 is described in the initially filed application, the amendment does not introduce any new matter.

Respectfully submitted,

WOOD, PHILLIPS, KATZ,
CLARK & MORTIMER

By _____
John S. Mortimer
Reg. No. 30,407

Dated: Feb 11, 2019

500 West Madison Street
Suite 1130
Chicago, IL 60661-2562
(312) 876-2113

UNITED STATES PATENT AND TRADEMARK OFFICE

Commissioner for Patents
United States Patent and Trademark Office
P.O. Box 1450
Alexandria, VA 22313-1450
www.uspto.gov

Application No. : 15040735
Applicant : DeJule
Filing Date : 02/10/2016
Date Mailed : 01/29/2019

NOTICE TO FILE CORRECTED APPLICATION PAPERS

Notice of Allowance Mailed

This application has been accorded an Allowance Date and is being prepared for issuance. The application, however, is incomplete for the reasons below.

Applicant is given two (2) months from the mail date of this Notice within which to respond. This time period for reply is extendable under 37 CFR 1.136(a) for only TWO additional MONTHS.

The informalities requiring correction are indicated in the attachment(s). If the informality pertains to the abstract, specification (including claims) or drawings, the informality must be corrected with an amendment in compliance with 37 CFR 1.121 (or, if the application is a reissue application, 37 CFR 1.173). Such an amendment may be filed after payment of the issue fee if limited to correction of informalities noted herein. See Waiver of 37 CFR 1.312 for Documents Required by the Office of Patent Publication, 1280 Off. Gaz. Patent Office 918 (March 23, 2004). In addition, if the informality is not corrected until after payment of the issue fee, for purposes of 35 U.S.C. 154(b)(1)(iv), "all outstanding requirements" will be considered to have been satisfied when the informality has been corrected. A failure to respond within the above-identified time period will result in the application being ABANDONED.

See attachment(s).

A copy of this notice MUST be returned with the reply. Please address response to "Mail Stop Issue Fee, Commissioner for Patents, P.O. Box 1450, Alexandria, VA 22313-1450".

/Joanna Black/
Publication Branch
Office of Data Management
(571) 272-4200

Application No. 15040735

IDENTIFICATION OF SPECIFICATION/DRAWING INCONSISTENCIES

- [ ] On Page of the specification there is a brief description of FIG. , but the drawings filed do not include a drawing with that designation. Applicant must respond either by supplying the omitted drawing or by amending the specification to remove all references to that drawing.

- [X] The drawings filed 02/10/2016 include FIG. 18, but the specification's brief description of the drawings does not describe a drawing with that designation. Applicant must respond either by amending the specification to add a brief description of that drawing or by correcting the drawings to remove the drawing in question.

- [ ] In the utility application, drawings are present in the application and are referred to in the detailed description of the invention, but the specification does not contain a brief description of the several views as required by 37 CFR 1.74 and 37 CFR 1.77(b)(9).

- [ ] The design application does not contain a description of the figure or figures of the drawing as required by 37 CFR 1.153(a) and 37 CFR 1.154(b)(4).

- [ ] In the plant application, the specification does not contain a brief description of the drawing as required by 37 CFR 1.163(c)(8).

- [ ] Page of the specification refers to FIG. , but no drawing with that designation is described in the brief description of the drawings and no drawing with that designation is present in the application. Applicant must respond either by amending the specification to remove all references to that drawing, or by supplying that drawing and amending the specification to add a brief description of it.

- [ ] In the reissue application, FIG. , is labeled as "New" but is not described in the reissue specification's brief description of the drawings. Applicant must respond by amending the reissue specification's brief description of the drawings to add a brief description of the new drawing.

- [ ] OTHER:

- [ ] COMMENTS:

UNITED STATES PATENT AND TRADEMARK OFFICE

UNITED STATES DEPARTMENT OF COMMERCE
United States Patent and Trademark Office
Address: COMMISSIONER FOR PATENTS
P.O. Box 1450
Alexandria, Virginia 22313-1450
www.uspto.gov

APPLICATION NO.	FILING DATE	FIRST NAMED INVENTOR	ATTORNEY DOCKET NO.	CONFIRMATION NO.
15/040,735	02/10/2016	Aaron DeJule	DEJ10730P00071US	1083

32116 7590 02/19/2019
WOOD, PHILLIPS, KATZ, CLARK & MORTIMER
500 W. MADISON STREET
SUITE 1130
CHICAGO, IL 60661

EXAMINER
BRINDLEY, TIMOTHY J

ART UNIT	PAPER NUMBER
3636	

NOTIFICATION DATE	DELIVERY MODE
02/19/2019	ELECTRONIC

Please find below and/or attached an Office communication concerning this application or proceeding.

The time period for reply, if any, is set in the attached communication.

Notice of the Office communication was sent electronically on above-indicated "Notification Date" to the following e-mail address(es):

docketing@woodphillips.com

PTOL-90A (Rev. 04/07)

Response to Rule 312 Communication	Application No.	Applicant(s)	
	15/040,735	DeJule et al.	
	Examiner	Art Unit	AIA Status
	TIMOTHY J BRINDLEY	3636	Yes

-- The MAILING DATE of this communication appears on the cover sheet with the correspondence address --

1. ☑ The amendment filed on 11 February 2018 under 37 CFR 1.312 has been considered, and has been:

a) ☐ entered.

b) ☑ entered as directed to matters of form not affecting the scope of the invention.

c) ☐ disapproved because the amendment was filed after the payment of the issue fee.
Any amendment filed after the date the issue fee is paid must be accompanied by a petition under 37 CFR 1.313(c)(1) and the required fee to withdraw the application from issue.

d) ☐ disapproved. See explanation below.

e) ☐ entered in part. See explanation below.

/TIMOTHY J BRINDLEY/ Primary Examiner, Art Unit 3636	

IN THE UNITED STATES PATENT AND TRADEMARK OFFICE

In re Application of:	)	APPARATUS WITH WEIGHT RESPONSIVE CHANGEABLE ADJUSTABLE CHARACTERISTICS
AARON DEJULE et al.	)	
	)	Examiner: Timothy J. Brindley
Serial No. 15/040,735	)	
	)	Group Art Unit 3636
Filed: February 10, 2016	)	
	)	Confirmation No. 1083

AMENDMENT UNDER RULE 312

Commissioner for Patents
P.O. Box 1450
Alexandria, VA 22313-1450

Sir:

Responsive to Notice to File Corrected Application Papers, dated January 29, 2019, please amend the above-identified application as indicated below.

Amendments to the Specification begin on page **2** of this paper.

Remarks begin on page **3** of this paper.

AMENDMENTS TO THE SPECIFICATION:

On page 8, paragraph [0039], please amend as follows:

Figs. 7-16 are partially schematic representations of apparatus incorporating different forms of adjusting assemblies, according to the invention; [[and]]

On page 9, paragraph [0040], please amend as follows:

Fig. 17 is a schematic representation of a further modified form of reconfigurable apparatus, according to the present invention; and

Fig. 18 is a schematic representation of adjusting assemblies, according to the invention, acting between separate components on a frame.

REMARKS

The specification has been amended herein to correct the informalities noted in the Notice to File Corrected Application Papers. Specifically, the Brief Description of the Drawings has been amended to include a description of Fig. 18.

Entry to the record is requested.

Respectfully submitted,

WOOD, PHILLIPS, KATZ,
CLARK & MORTIMER

By _____
John S. Mortimer
Reg. No. 30,407

Dated: Feb 11, 2019

500 West Madison Street
Suite 1130
Chicago, IL 60661-2562
(312) 876-2113

PART B - FEE(S) TRANSMITTAL

Complete and send this form, together with applicable fee(s), by mail or fax, or via EFS-Web.

By mail, send to: Mail Stop ISSUE FEE
Commissioner for Patents
P.O. Box 1450
Alexandria, Virginia 22313-1450

By fax, send to: (571)-273-2885

INSTRUCTIONS: This form should be used for transmitting the ISSUE FEE and PUBLICATION FEE (if required). Blocks 1 through 5 should be completed where appropriate. All further correspondence including the Patent, advance orders and notification of maintenance fees will be mailed to the current correspondence address as indicated unless corrected below or directed otherwise in Block 1, by (a) specifying a new correspondence address; and/or (b) indicating a separate "FEE ADDRESS" for maintenance fee notifications.

CURRENT CORRESPONDENCE ADDRESS (Note: Use Block 1 for any change of address)

32116 7590 01/02/2019
WOOD, PHILLIPS, KATZ, CLARK & MORTIMER
500 W. MADISON STREET
SUITE 1130
CHICAGO, IL 60661

Note: A certificate of mailing can only be used for domestic mailings of the Fee(s) Transmittal. This certificate cannot be used for any other accompanying papers. Each additional paper, such as an assignment or formal drawing, must have its own certificate of mailing or transmission.

Certificate of Mailing or Transmission

I hereby certify that this Fee(s) Transmittal is being deposited with the United States Postal Service with sufficient postage for first class mail in an envelope addressed to the Mail Stop ISSUE FEE address above, or being transmitted to the USPTO via EFS-Web or by facsimile to (571) 273-2885, on the date below.

(Typed or printed name)
(Signature)
(Date)

APPLICATION NO.	FILING DATE	FIRST NAMED INVENTOR	ATTORNEY DOCKET NO.	CONFIRMATION NO.
15/040,735	02/10/2016	Aaron Defule	DEJ10730P0007US	1083

TITLE OF INVENTION: APPARATUS WITH WEIGHT RESPONSIVE CHANGEABLE ADJUSTING CHARACTERISTICS

APPLN. TYPE	ENTITY STATUS	ISSUE FEE DUE	PUBLICATION FEE DUE	PREV. PAID ISSUE FEE	TOTAL FEE(S) DUE	DATE DUE
nonprovisional	SMALL	$500	$0.00	$0.00	$500	04/02/2019

EXAMINER	ART UNIT	CLASS-SUBCLASS
BRINDLEY, TIMOTHY J	3636	297-300200

1. Change of correspondence address or indication of "Fee Address" (37 CFR 1.363).

☐ Change of correspondence address (or Change of Correspondence Address form PTO/SB/122) attached.

☐ "Fee Address" indication (or "Fee Address" Indication form PTO/SB/47; Rev 03-09 or more recent) attached. Use of a Customer Number is required.

2. For printing on the patent front page, list
(1) The names of up to 3 registered patent attorneys or agents OR, alternatively,
(2) The name of a single firm (having as a member a registered attorney or agent) and the names of up to 2 registered patent attorneys or agents. If no name is listed, no name will be printed.

1 Wood, Phillips,
2 Katz, Clark
3 & Mortimer

3. ASSIGNEE NAME AND RESIDENCE DATA TO BE PRINTED ON THE PATENT (print or type)

PLEASE NOTE: Unless an assignee is identified below, no assignee data will appear on the patent. If an assignee is identified below, the document must have been previously recorded, or filed for recordation, as set forth in 37 CFR 3.11 and 37 CFR 3.81(a). Completion of this form is NOT a substitute for filing an assignment.

(A) NAME OF ASSIGNEE (B) RESIDENCE: (CITY and STATE OR COUNTRY)

Please check the appropriate assignee category or categories (will not be printed on the patent) : ☐ Individual ☐ Corporation or other private group entity ☐ Government

4a. Fees submitted: ☒ Issue Fee ☐ Publication Fee (if required) ☐ Advance Order - # of Copies _____

4b. Method of Payment: *(Please first reapply any previously paid fee shown above)*

☒ Electronic Payment via EFS-Web ☐ Enclosed check ☐ Non-electronic payment by credit card (Attach form PTO-2038)

☒ The Director is hereby authorized to charge the required fee(s), any deficiency, or credit any overpayment to Deposit Account No. 23-0785

5. **Change in Entity Status** (from status indicated above)

☐ Applicant certifying micro entity status. See 37 CFR 1.29

☐ Applicant asserting small entity status. See 37 CFR 1.27

☐ Applicant changing to regular undiscounted fee status.

NOTE: Absent a valid certification of Micro Entity Status (see forms PTO/SB/15A and 15B), issue fee payment in the micro entity amount will not be accepted at the risk of application abandonment.
NOTE: If the application was previously under micro entity status, checking this box will be taken to be a notification of loss of entitlement to micro entity status.
NOTE: Checking this box will be taken to be a notification of loss of entitlement to small or micro entity status, as applicable.

NOTE: This form must be signed in accordance with 37 CFR 1.31 and 1.33. See 37 CFR 1.4 for signature requirements and certifications.

Authorized Signature _____ Date April 2, 2019

Typed or printed name John S. Mortimer Registration No. 30,407

Electronic Patent Application Fee Transmittal

Application Number:	15040735
Filing Date:	10-Feb-2016
Title of Invention:	APPARATUS WITH WEIGHT RESPONSIVE CHANGEABLE ADJUSTING CHARACTERISTICS
First Named Inventor/Applicant Name:	Aaron DeJule
Filer:	John Stirling Mortimer/Linda Bowen
Attorney Docket Number:	DEJ10730P00071US

Filed as Small Entity

Filing Fees for Utility under 35 USC 111(a)

Description	Fee Code	Quantity	Amount	Sub-Total in USD($)
Basic Filing:				
Pages:				
Claims:				
Miscellaneous-Filing:				
Petition:				
Patent-Appeals-and-Interference:				
Post-Allowance-and-Post-Issuance:				
UTILITY APPL ISSUE FEE	2501	1	500	500

Description	Fee Code	Quantity	Amount	Sub-Total in USD($)
Extension-of-Time:				
Miscellaneous:				
			Total in USD ($)	**500**

Electronic Acknowledgement Receipt	
EFS ID:	35599326
Application Number:	15040735
International Application Number:	
Confirmation Number:	1083
Title of Invention:	APPARATUS WITH WEIGHT RESPONSIVE CHANGEABLE ADJUSTING CHARACTERISTICS
First Named Inventor/Applicant Name:	Aaron DeJule
Customer Number:	32116
Filer:	John Stirling Mortimer/Linda Bowen
Filer Authorized By:	John Stirling Mortimer
Attorney Docket Number:	DEJ10730P00071US
Receipt Date:	02-APR-2019
Filing Date:	10-FEB-2016
Time Stamp:	11:32:03
Application Type:	Utility under 35 USC 111(a)

Payment information:

Submitted with Payment	yes
Payment Type	DA
Payment was successfully received in RAM	$500
RAM confirmation Number	040219INTEFSW00010560230785
Deposit Account	
Authorized User	
The Director of the USPTO is hereby authorized to charge indicated fees and credit any overpayment as follows:	

File Listing:

Document Number	Document Description	File Name	File Size(Bytes)/ Message Digest	Multi Part /.zip	Pages (if appl.)
1	Issue Fee Payment (PTO-85B)	15040735_Issue_Fee.pdf	112459 57e41da094e42d897415b1e89d063dd9458fe8e1	no	1
Warnings:					
Information:					
2	Fee Worksheet (SB06)	fee-info.pdf	30489 edb1ca7c81596bd1c02101a157fb445014a2f314	no	2
Warnings:					
Information:					
		Total Files Size (in bytes):	142948		

This Acknowledgement Receipt evidences receipt on the noted date by the USPTO of the indicated documents, characterized by the applicant, and including page counts, where applicable. It serves as evidence of receipt similar to a Post Card, as described in MPEP 503.

<u>New Applications Under 35 U.S.C. 111</u>
If a new application is being filed and the application includes the necessary components for a filing date (see 37 CFR 1.53(b)-(d) and MPEP 506), a Filing Receipt (37 CFR 1.54) will be issued in due course and the date shown on this Acknowledgement Receipt will establish the filing date of the application.
<u>National Stage of an International Application under 35 U.S.C. 371</u>
If a timely submission to enter the national stage of an international application is compliant with the conditions of 35 U.S.C. 371 and other applicable requirements a Form PCT/DO/EO/903 indicating acceptance of the application as a national stage submission under 35 U.S.C. 371 will be issued in addition to the Filing Receipt, in due course.
<u>New International Application Filed with the USPTO as a Receiving Office</u>
If a new international application is being filed and the international application includes the necessary components for an international filing date (see PCT Article 11 and MPEP 1810), a Notification of the International Application Number and of the International Filing Date (Form PCT/RO/105) will be issued in due course, subject to prescriptions concerning national security, and the date shown on this Acknowledgement Receipt will establish the international filing date of the application.

UNITED STATES PATENT AND TRADEMARK OFFICE

UNITED STATES DEPARTMENT OF COMMERCE
United States Patent and Trademark Office
Address: COMMISSIONER FOR PATENTS
P.O. Box 1450
Alexandria, Virginia 22313-1450
www.uspto.gov

APPLICATION NO.	ISSUE DATE	PATENT NO.	ATTORNEY DOCKET NO.	CONFIRMATION NO.
15/040,735	05/21/2019	10292498	DEJ10730P00071US	1083

32116 7590 05/01/2019
WOOD, PHILLIPS, KATZ, CLARK & MORTIMER
500 W. MADISON STREET
SUITE 1130
CHICAGO, IL 60661

ISSUE NOTIFICATION

The projected patent number and issue date are specified above.

Determination of Patent Term Adjustment under 35 U.S.C. 154 (b)
(application filed on or after May 29, 2000)

The Patent Term Adjustment is 272 day(s). Any patent to issue from the above-identified application will include an indication of the adjustment on the front page.

If a Continued Prosecution Application (CPA) was filed in the above-identified application, the filing date that determines Patent Term Adjustment is the filing date of the most recent CPA.

Applicant will be able to obtain more detailed information by accessing the Patent Application Information Retrieval (PAIR) WEB site (http://pair.uspto.gov).

Any questions regarding the Patent Term Extension or Adjustment determination should be directed to the Office of Patent Legal Administration at (571)-272-7702. Questions relating to issue and publication fee payments should be directed to the Application Assistance Unit (AAU) of the Office of Data Management (ODM) at (571)-272-4200.

APPLICANT(s) (Please see PAIR WEB site http://pair.uspto.gov for additional applicants):

Aaron DeJule, River Forest, IL;
Scott Padiak, Glance, IL;
Paul C. Evans, Bellaire, MI;

The United States represents the largest, most dynamic marketplace in the world and is an unparalleled location for business investment, innovation, and commercialization of new technologies. The USA offers tremendous resources and advantages for those who invest and manufacture goods here. Through SelectUSA, our nation works to encourage and facilitate business investment. To learn more about why the USA is the best country in the world to develop technology, manufacture products, and grow your business, visit SelectUSA.gov.

IR103 (Rev. 10/09)