US 20090261637A1

(19) United States

(12) Patent Application Publication

(10) Pub. No.: US 2009/0261637 A1

(43) Pub. Date: Oct. 22, 2009

Schmitz et al.

(54) PIECE OF FURNITURE

(76) Inventors: **Johann Burkhard Schmitz**, Berlin (DE); **Carola Eva Marianne Zwick**, Berlin (DE); **Roland Rolf Otto Zwick**, Berlin (DE); **Claudia Plikat**, Berlin (DE)

Correspondence Address:
BRINKS HOFER GILSON & LIONE
P.O. BOX 10395
CHICAGO, IL 60610 (US)

(21) Appl. No.: **12/225,336**

(22) PCT Filed: **Mar. 22, 2007**

(86) PCT No.: **PCT/IB07/00734**

§ 371 (c)(1),
(2), (4) Date: **Sep. 18, 2008**

(30) **Foreign Application Priority Data**

Mar. 24, 2006	(DE)	10 2006 014 109.1
Apr. 26, 2006	(DE)	10 2006 020 006.3
Apr. 26, 2006	(DE)	10 2006 020 007.1
Jul. 21, 2006	(DE)	10 2006 034 307.7
Jul. 27, 2006	(DE)	10 2006 035 553.9
Aug. 24, 2006	(DE)	10 2006 039 606.5

Publication Classification

(51) **Int. Cl.**
A47C 7/28 (2006.01)
A47C 31/00 (2006.01)

(52) **U.S. Cl.** **297/217.2**; 297/452.49

(57) **ABSTRACT**

The invention relates to a body support structure (**1**), such as a piece of furniture (**1**), in particular a piece of furniture for sitting on or a piece of furniture for lying on, such as, for example, chair (**3**), armchair, stool, bed or sofa, a seat (**7**) of the piece of furniture (**1**) being supported by a spring mechanism (SM), and the spring mechanism (SM) being capable of being set to a weight force (**40**) with which a person acts on the seat (**7**).

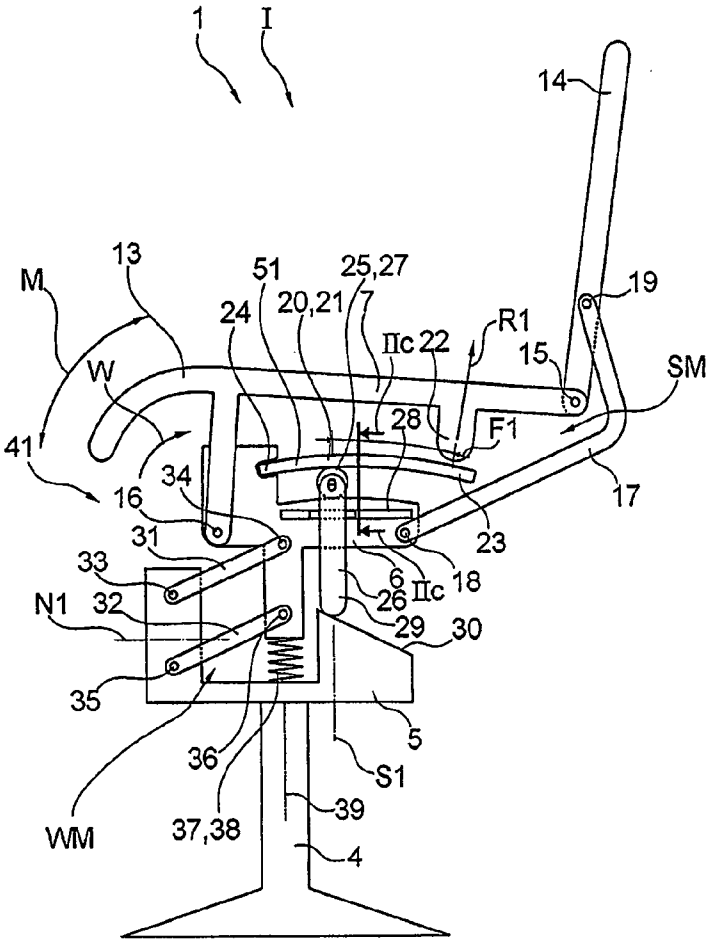

MillerKnoll, Ex. 1006

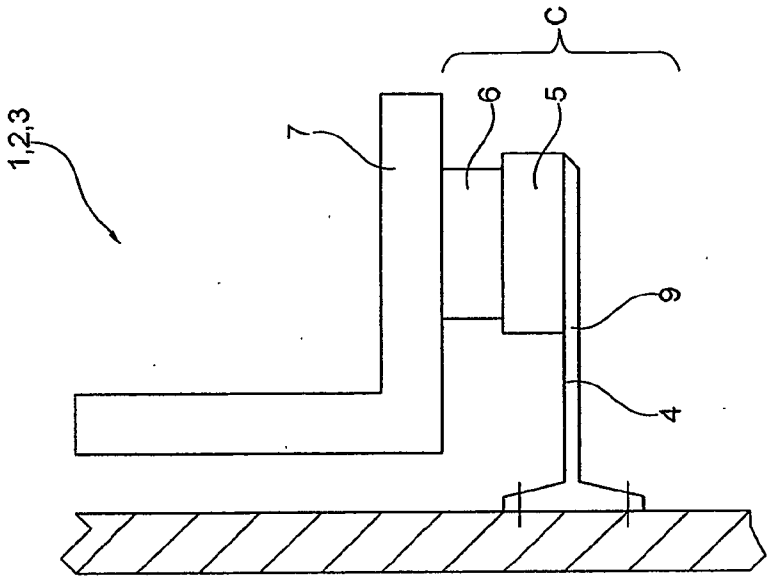

Fig. 1b

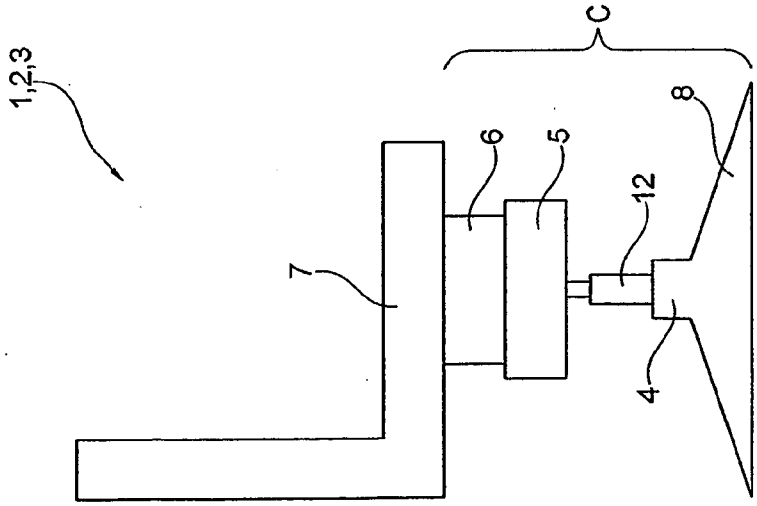

Fig. 1a

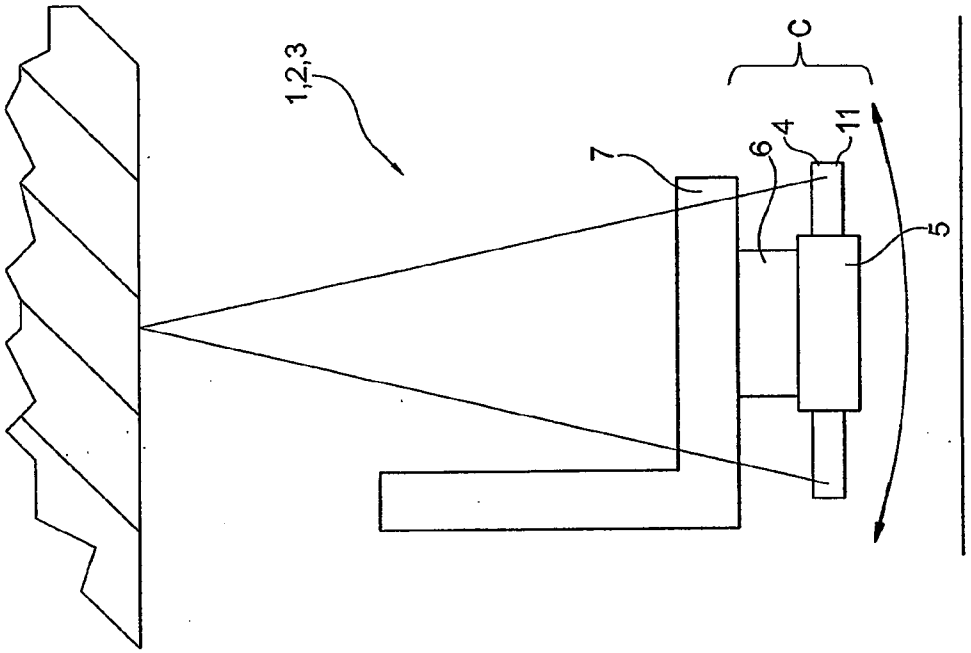

Fig. 1d

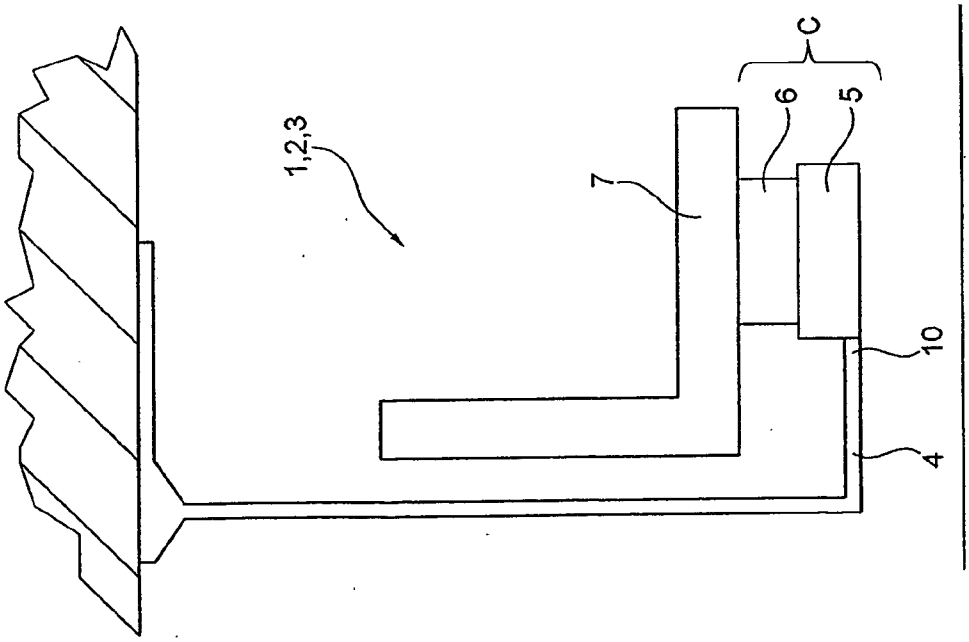

Fig. 1c

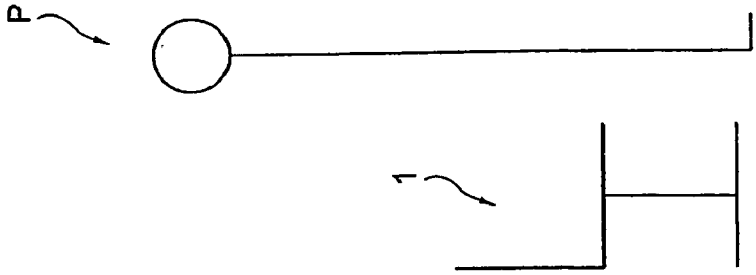

Fig. 1e

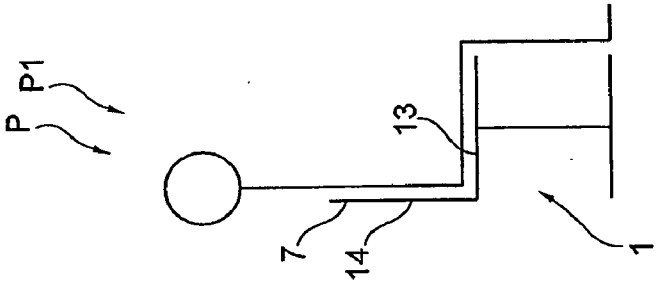

Fig. 1f

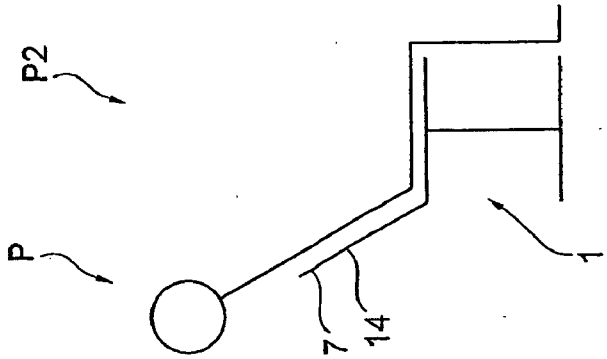

Fig. 1g

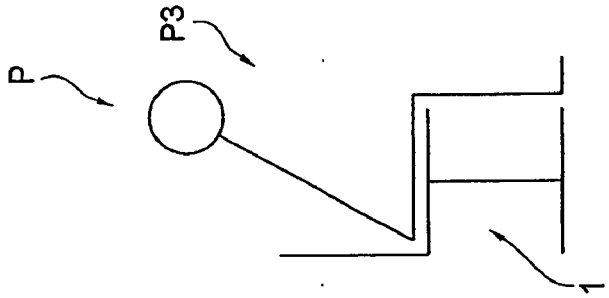

Fig. 1h

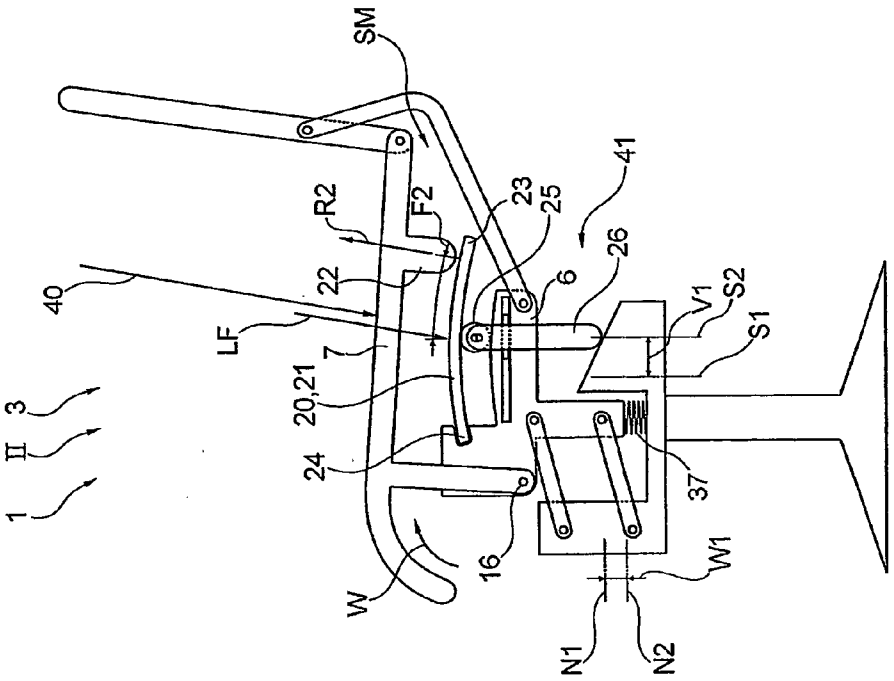
SM
R2
F2
23
25
41
26
6
22
40
LF
7
20,21
24
16
W
1
II
3
V1
S2
S1
37
W1
N1
N2

Fig. 2b

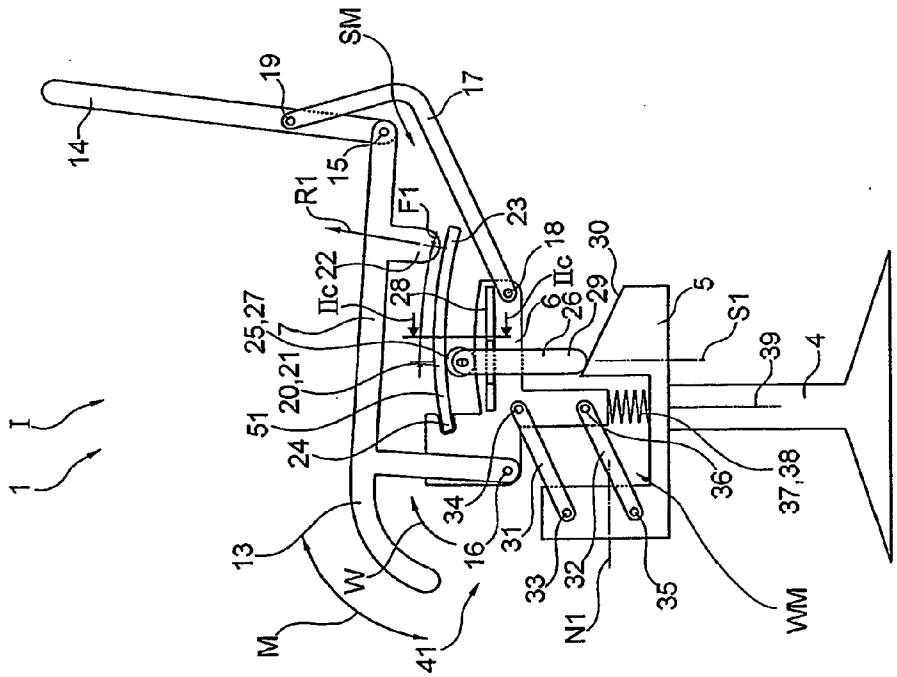
SM
19
17
14
15
R1
F1
23
18
30
IIc
22
28
6
26
29
5
S1
25,27
7
20,21
51
24
39
4
I
1
13
W
16
34
31
33
32
35
36
37,38
WM
N1
M
41

Fig. 2a

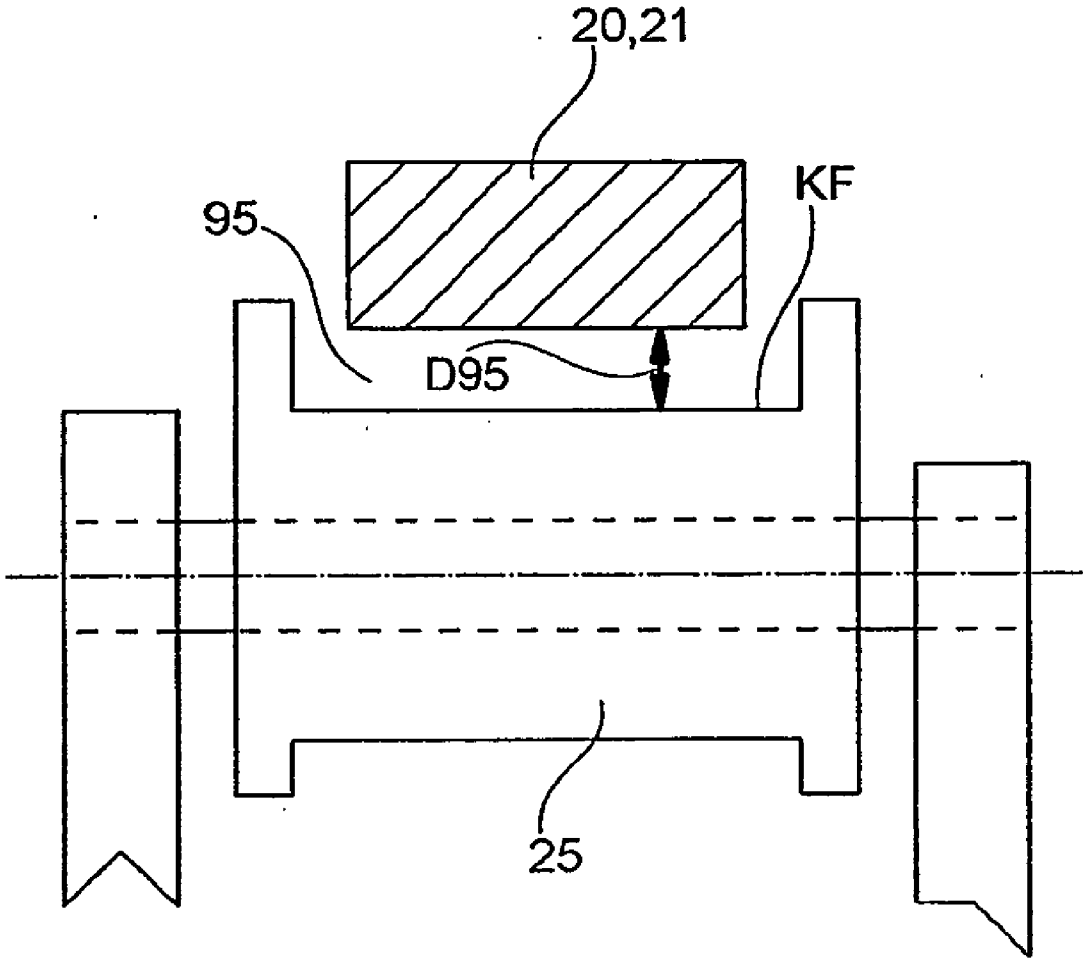

Fig. 2c

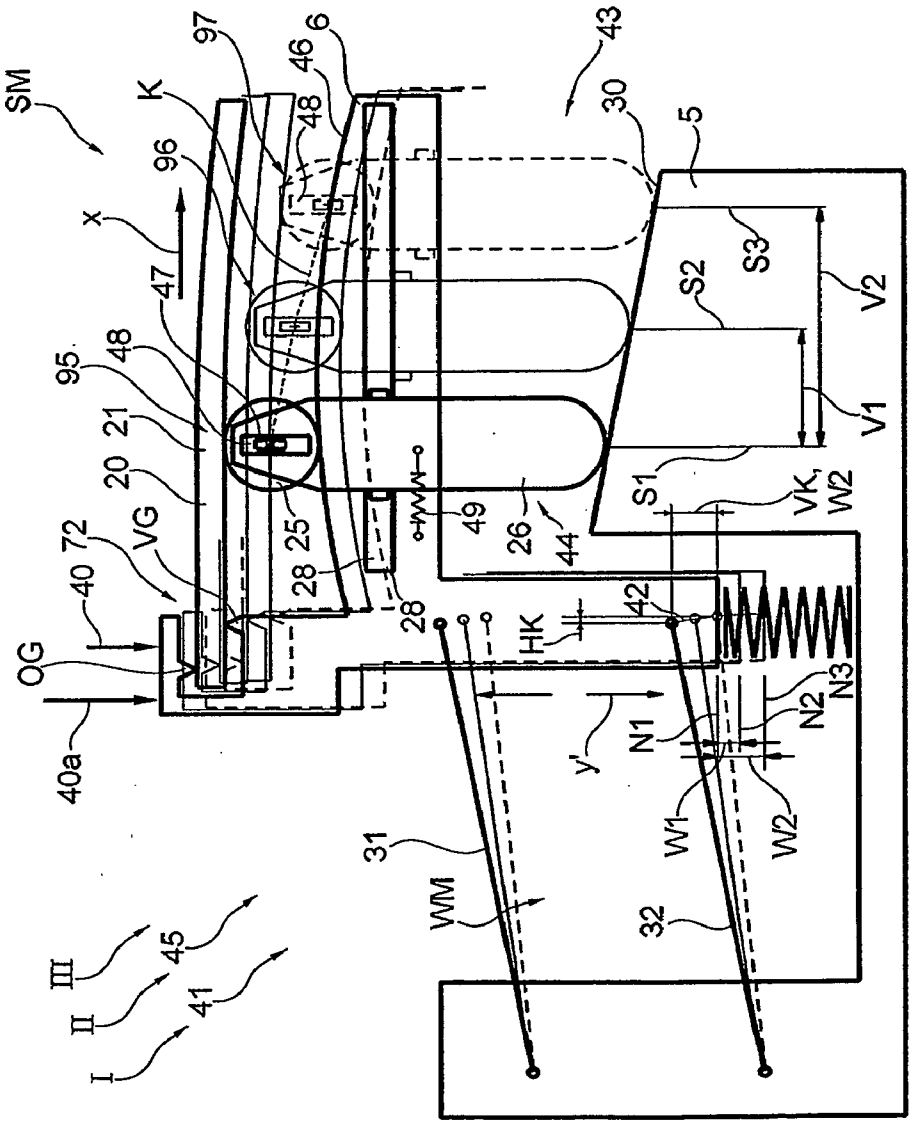
SM
K
97
46
6
43
30
5
96
48
x
47
S3
S2
V2
95
48
21
20
V1
S1
VK,
W2
72
VG
40
25
49
26
44
28
28
42
HK
OG
40a
N1
N2
N3
y'
W1
W2
31
WM
32
III
45
II
41
I

Fig. 3

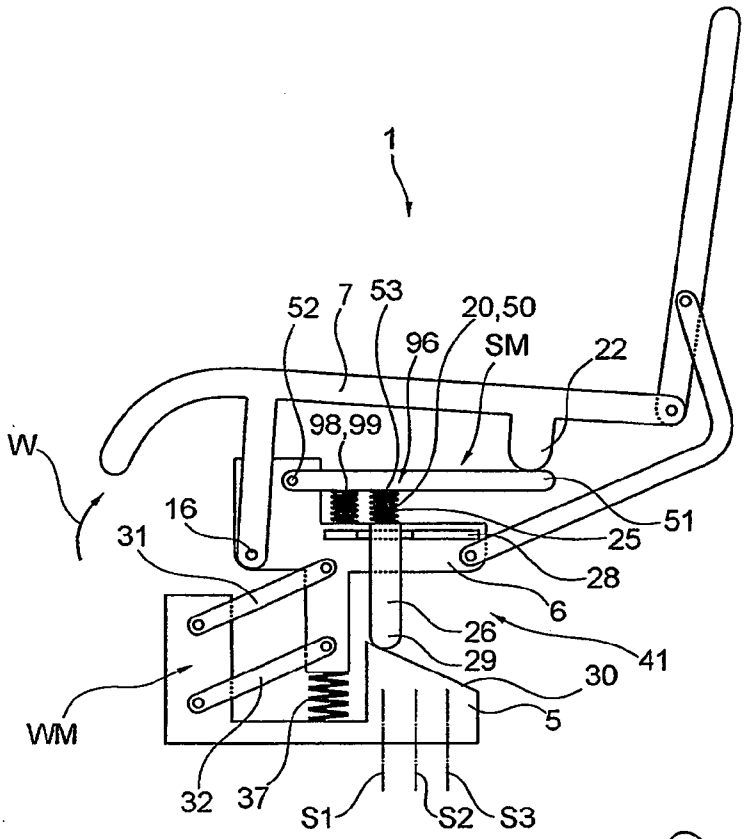
1
52
7
53
20,50
96
SM
22
98,99
W
16
31
25
51
28
6
26
29
41
30
5
WM
32
37
S1
S2
S3

Fig. 4a

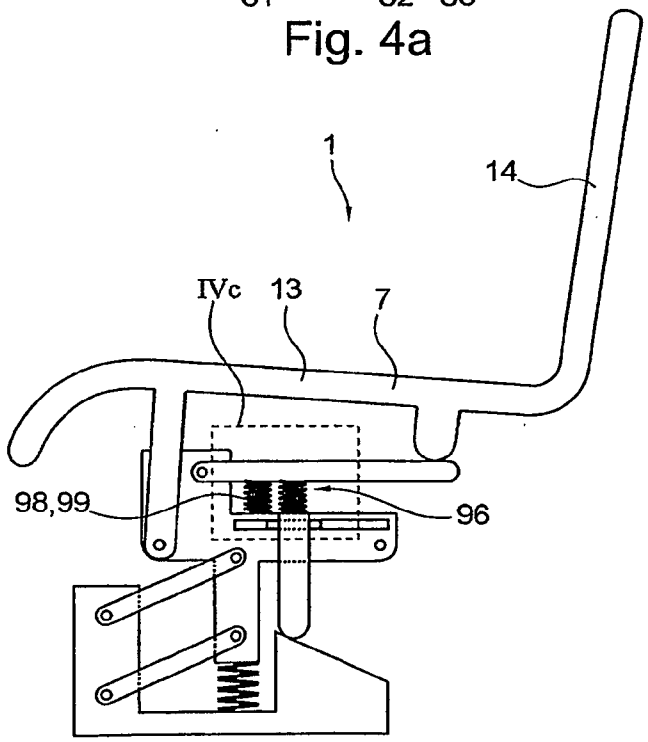
1
14
IVc
13
7
98,99
96

Fig. 4b

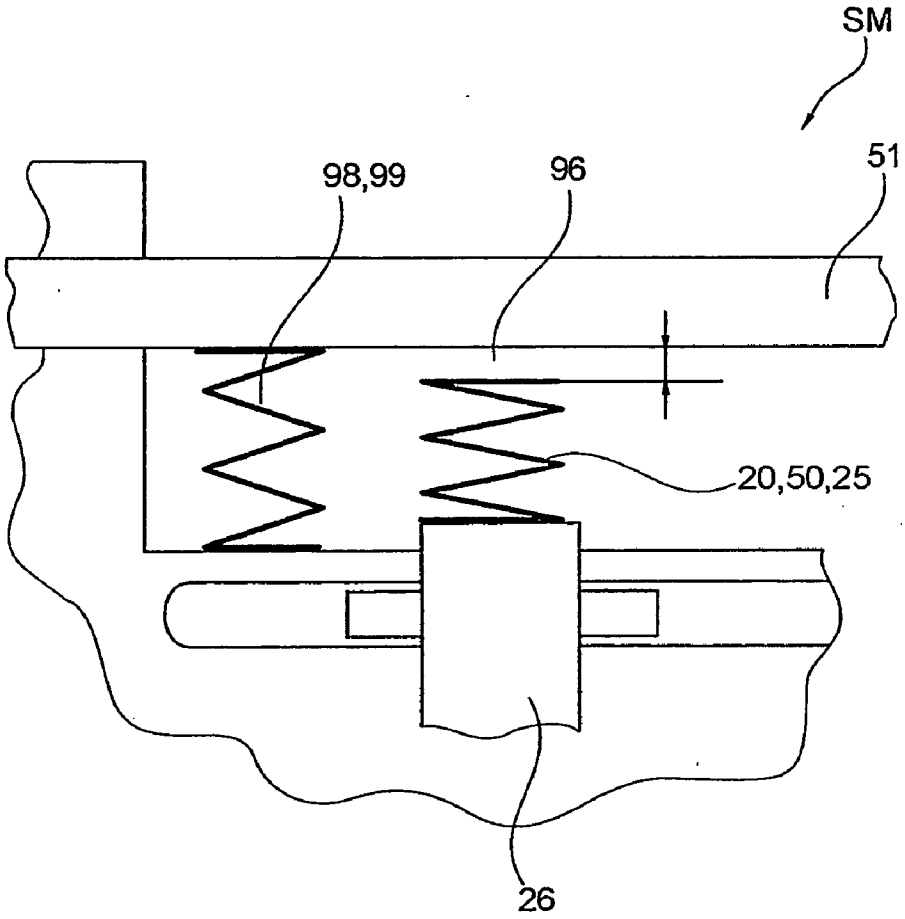

Fig. 4c

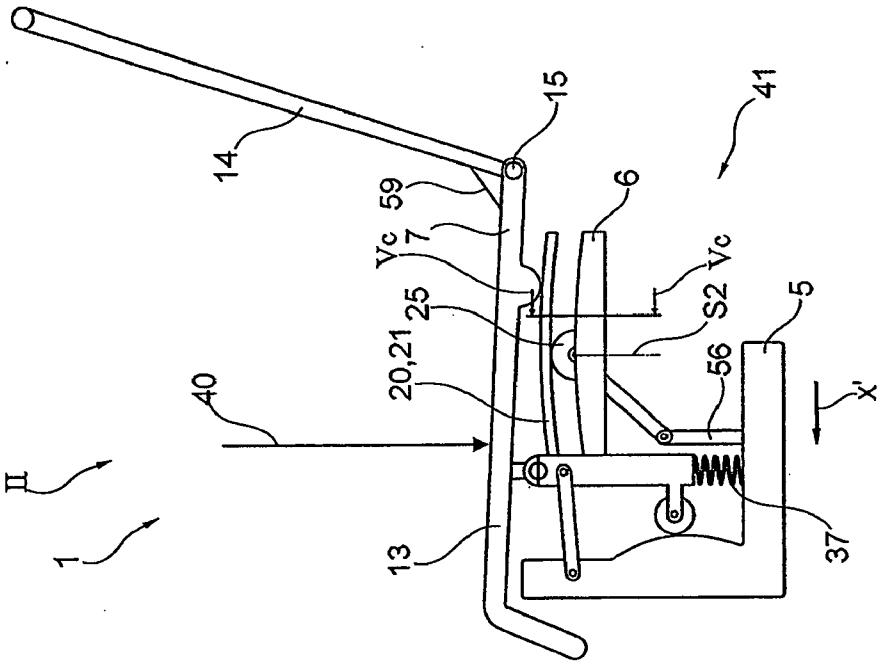
14
15
41
59
7
6
Vc
Vc
25
S2
5
20,21
56
40
x'
II
1
13
37

Fig. 5b

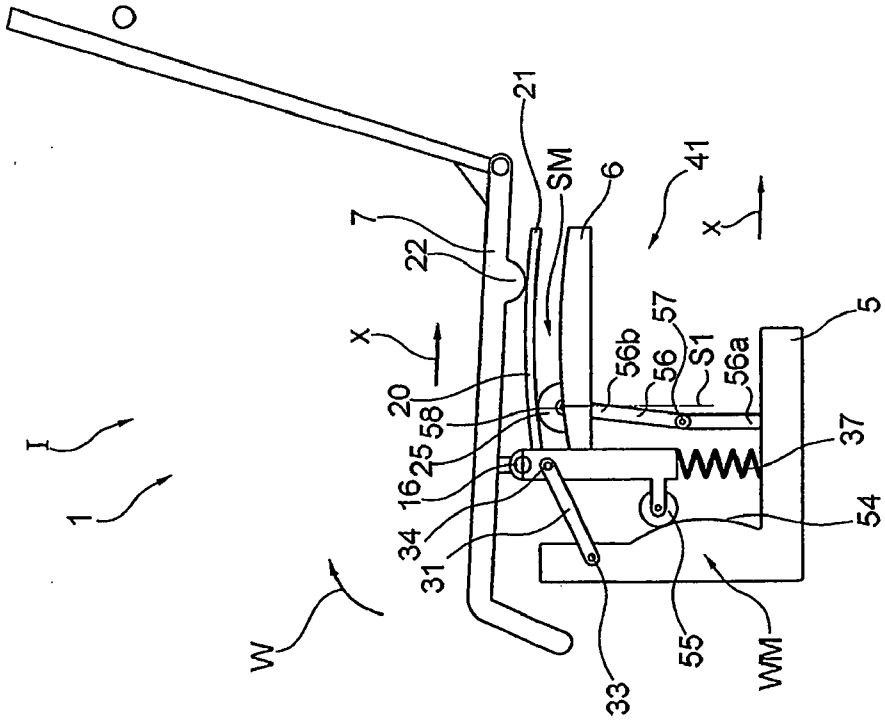
21
SM
6
41
7
22
x
x
57
5
56b
56
S1
56a
20
58
25
37
16
34
54
31
I
1
W
33
55
WM

Fig. 5a

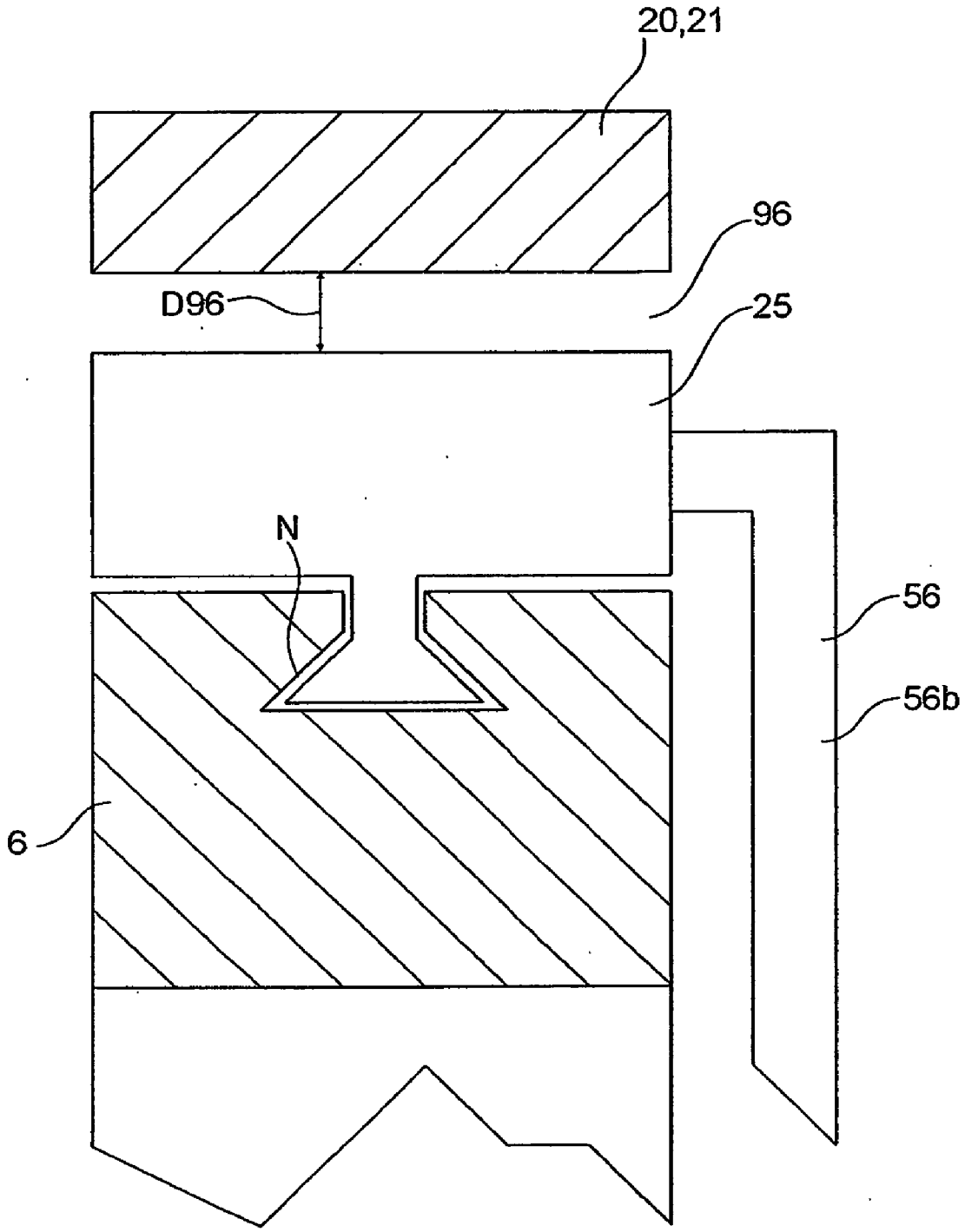

Fig. 5c

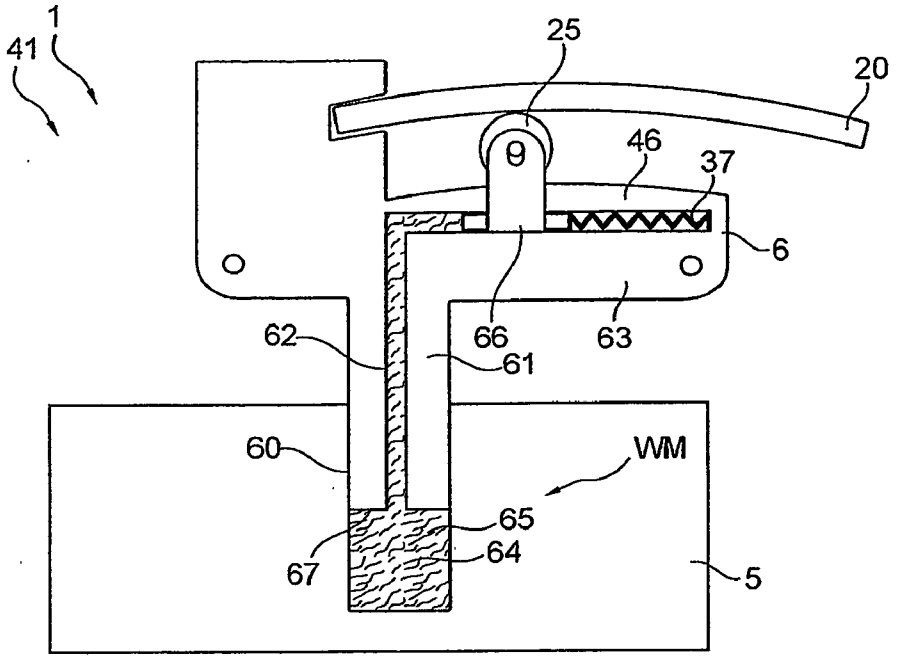
1
41
25
20
46
37
6
66
63
62
61
60
WM
65
64
67
5

Fig. 6a

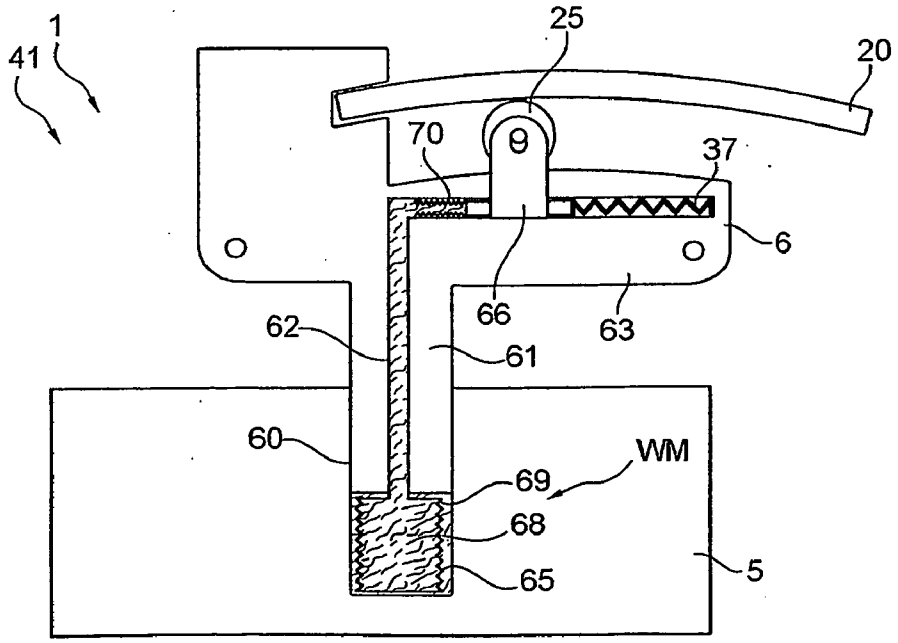
1
41
25
20
70
37
6
66
63
62
61
60
WM
69
68
65
5

Fig. 6b

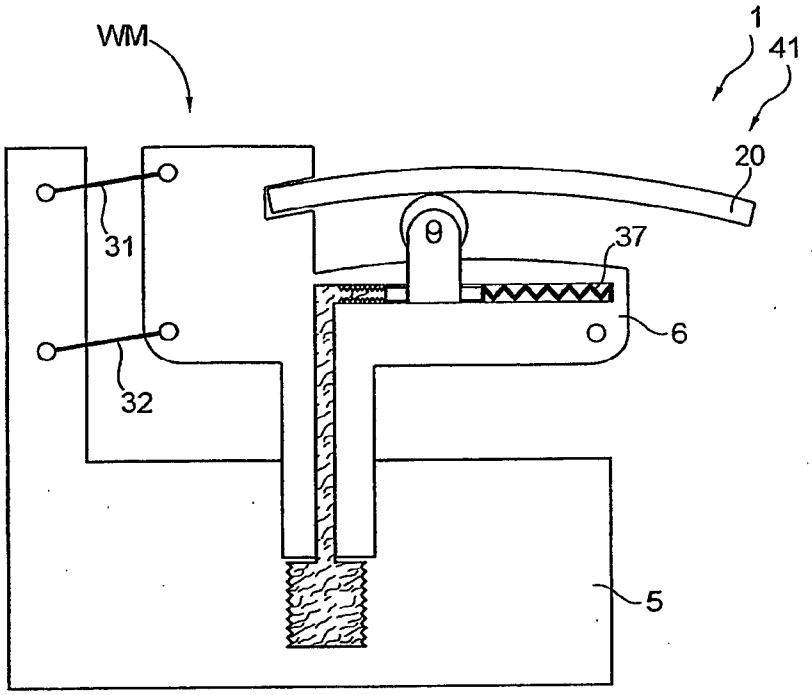

Fig. 6c

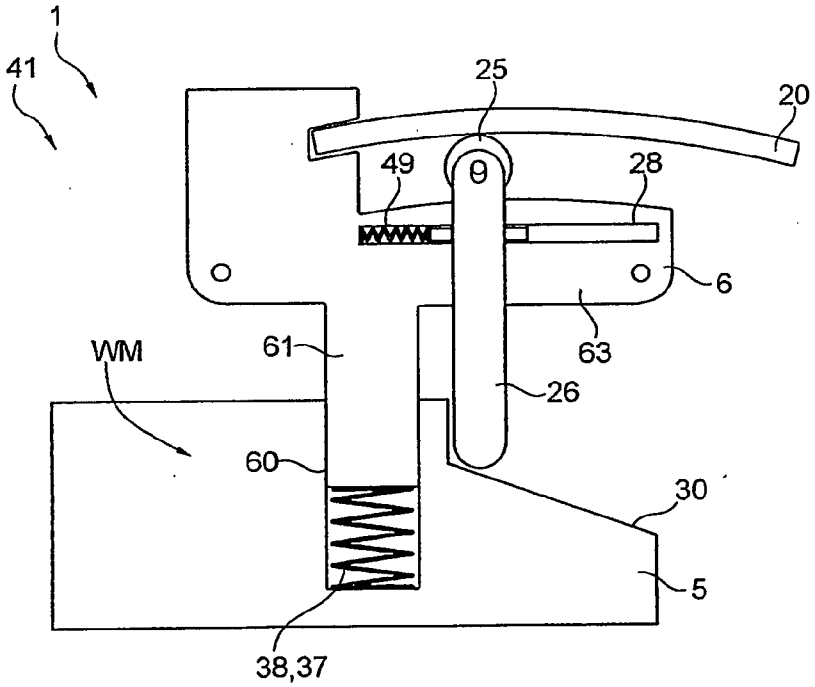

Fig. 6d

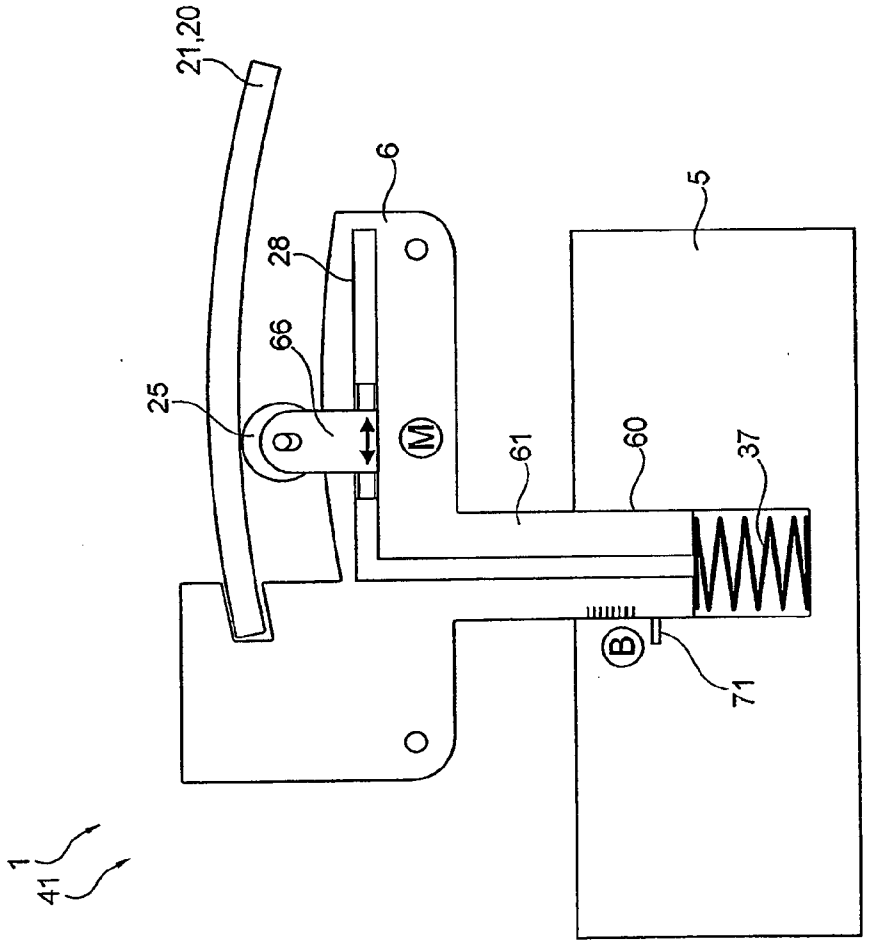

Fig. 6e

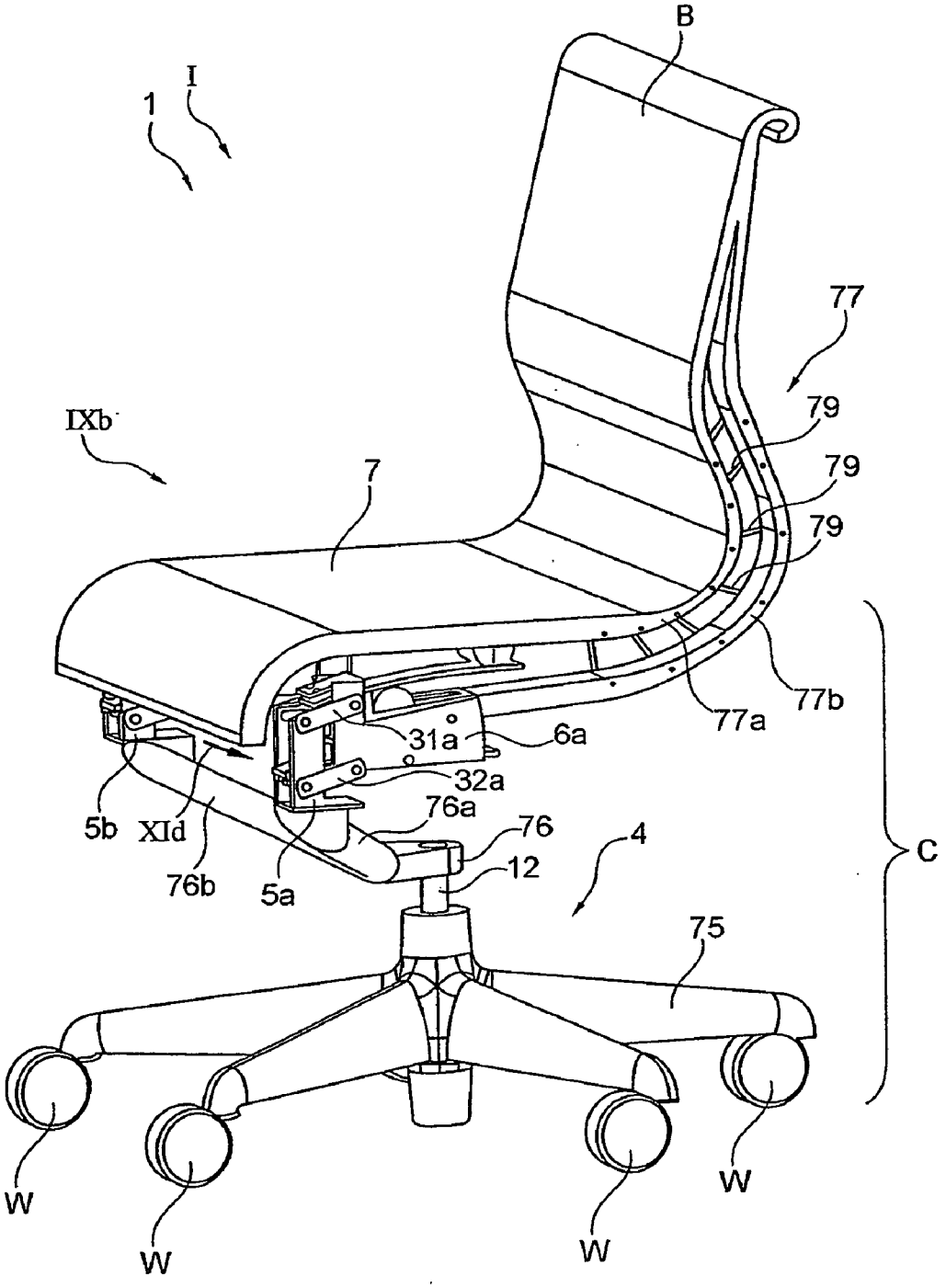
B
I
1
77
79
79
79
IXb
7
77b
77a
31a
6a
32a
76a
76
5b
XId
76b
5a
12
4
C
75
W
W
W
W

Fig. 7a

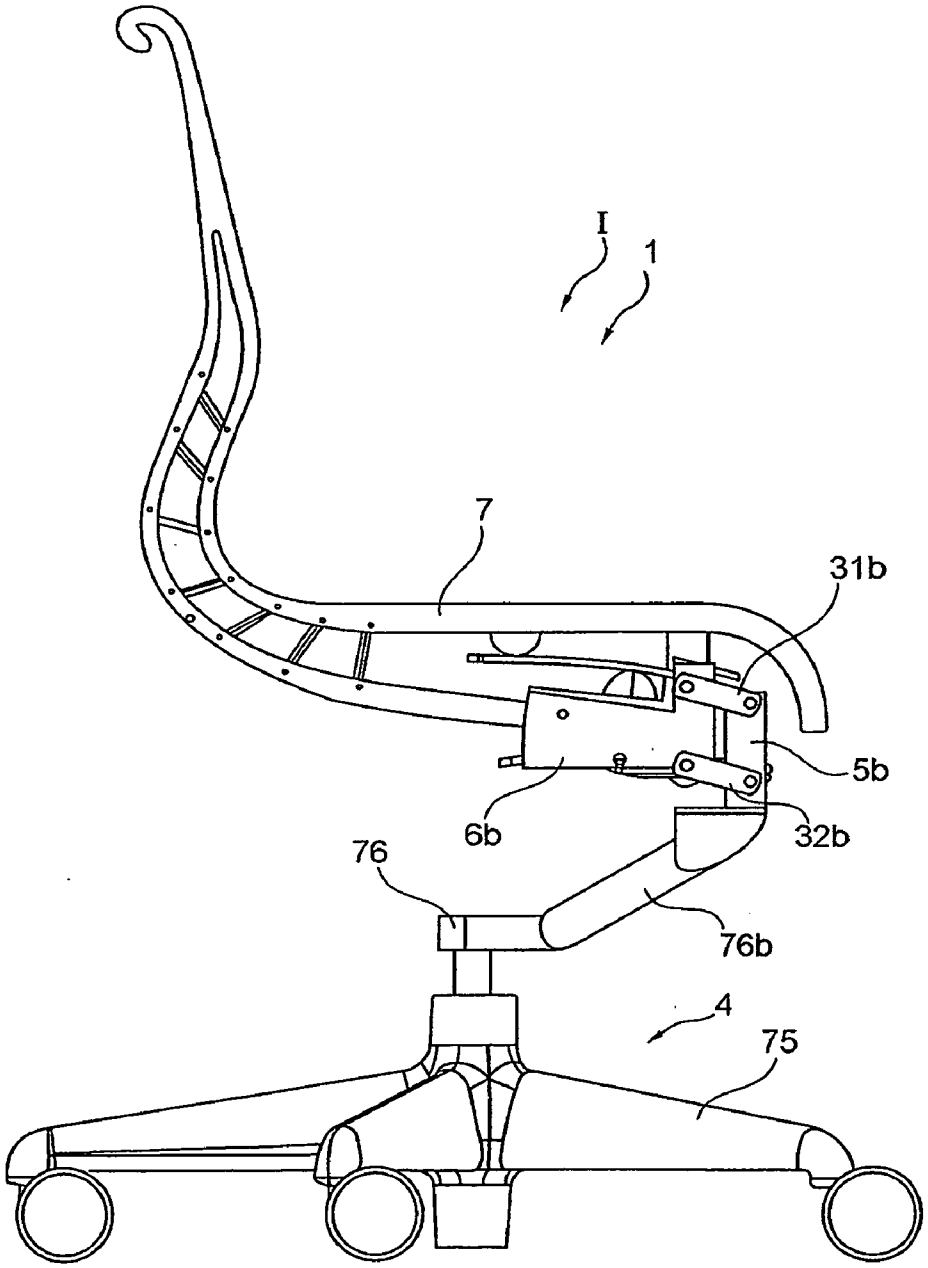

Fig. 7b

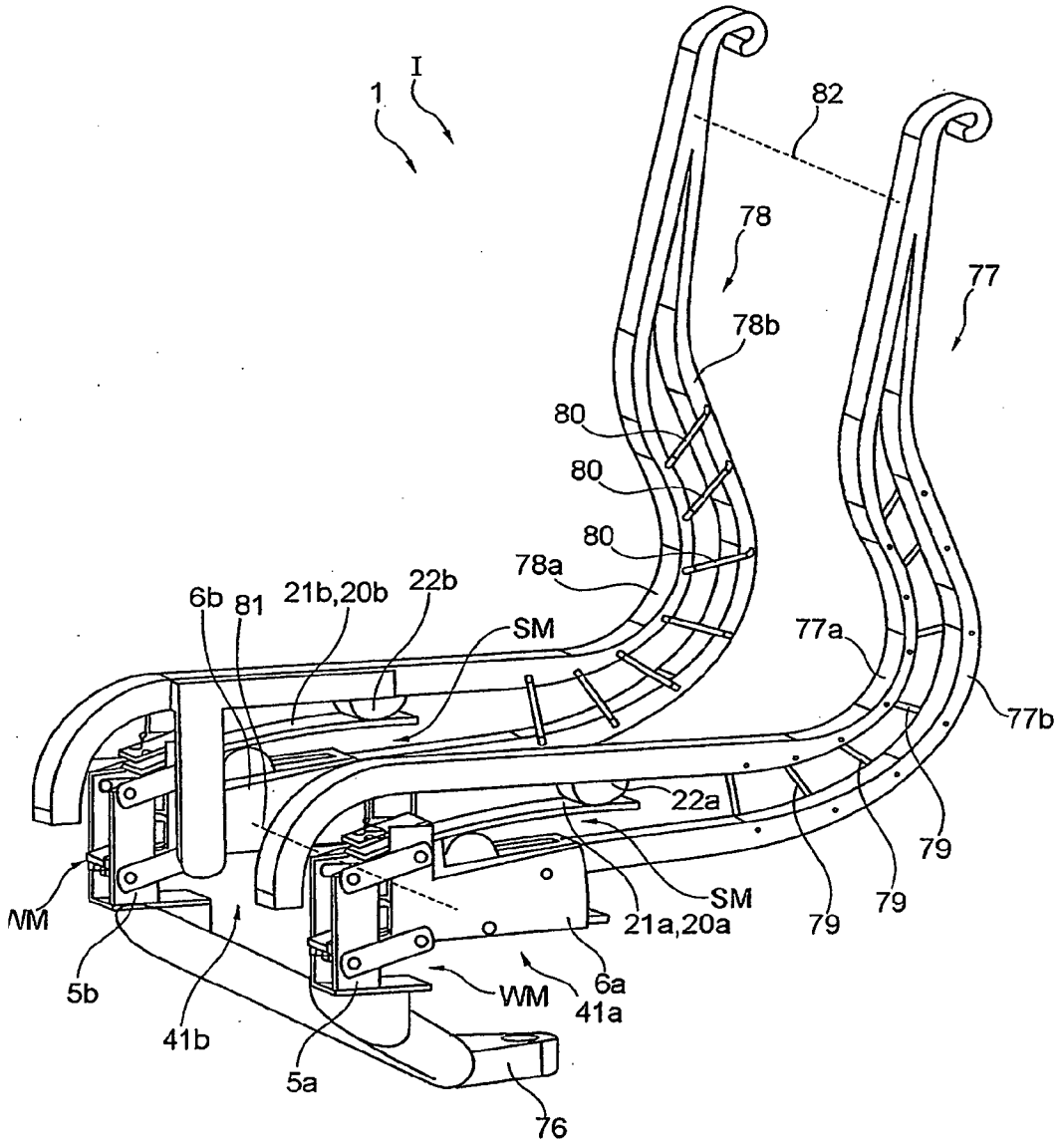
I
1
82
78
77
78b
80
80
80
78a
6b
81
21b,20b
22b
SM
77a
77b
22a
79
79
79
SM
21a,20a
WM
5b
41b
5a
WM
6a
41a
76

Fig. 7c

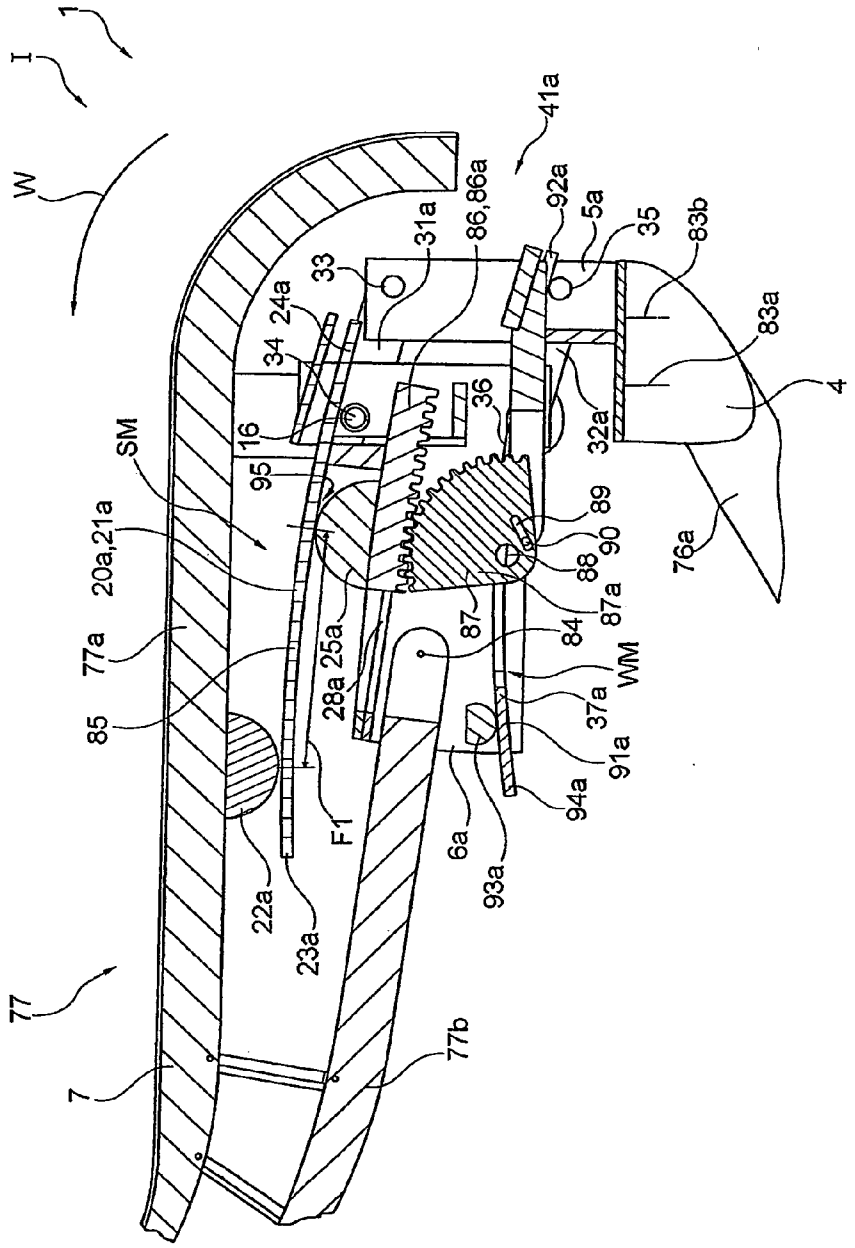
1
I
W
41a
92a
5a
35
83b
83a
4
76a
32a
36
86,86a
31a
33
24a
34
16
95
SM
20a,21a
77a
85
25a
28a
87
84
87a
88
90
89
WM
37a
91a
94a
93a
6a
F1
22a
23a
77
7
77b

Fig. 7d

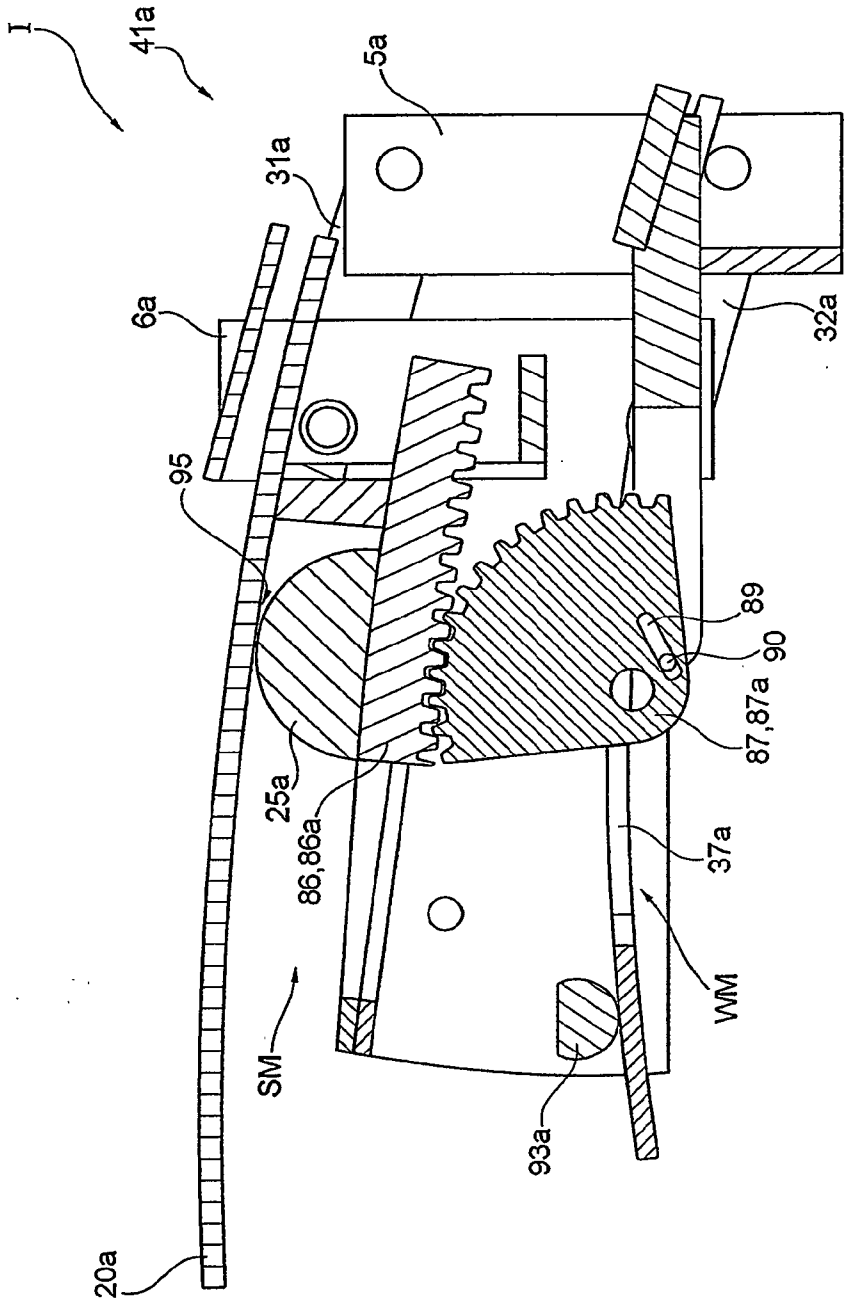

Fig. 7e

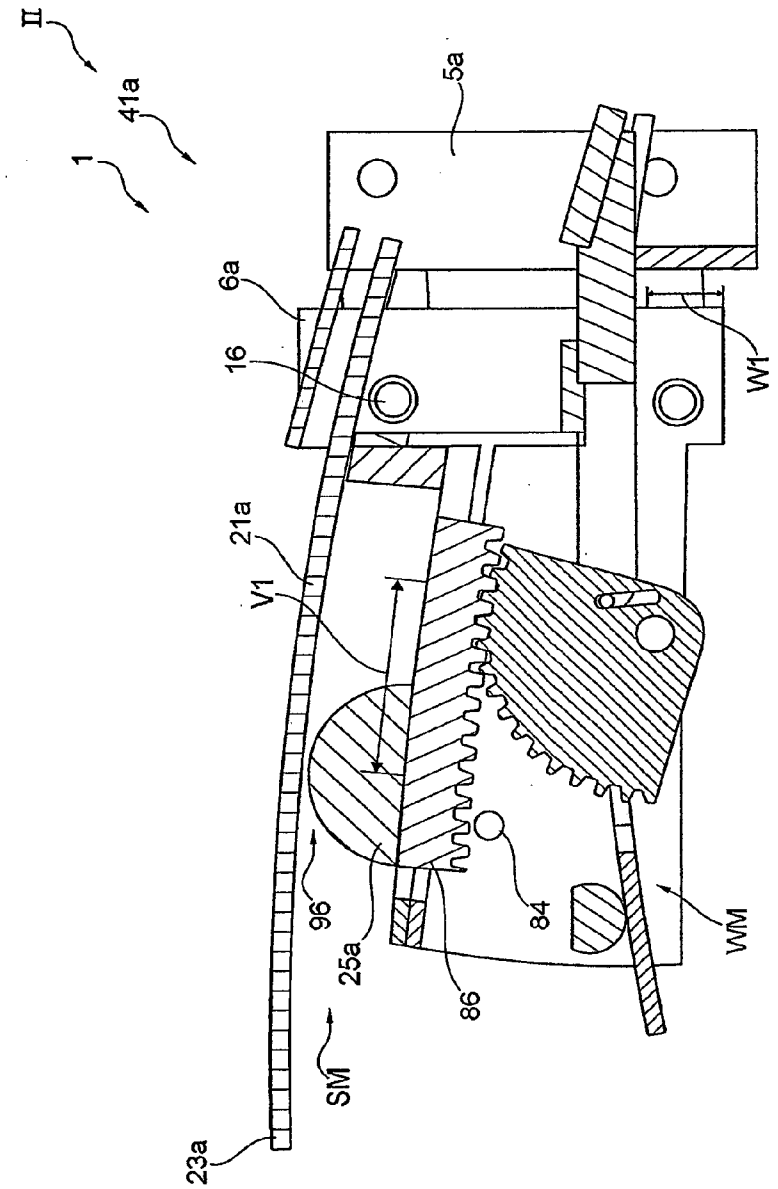

Fig. 7f

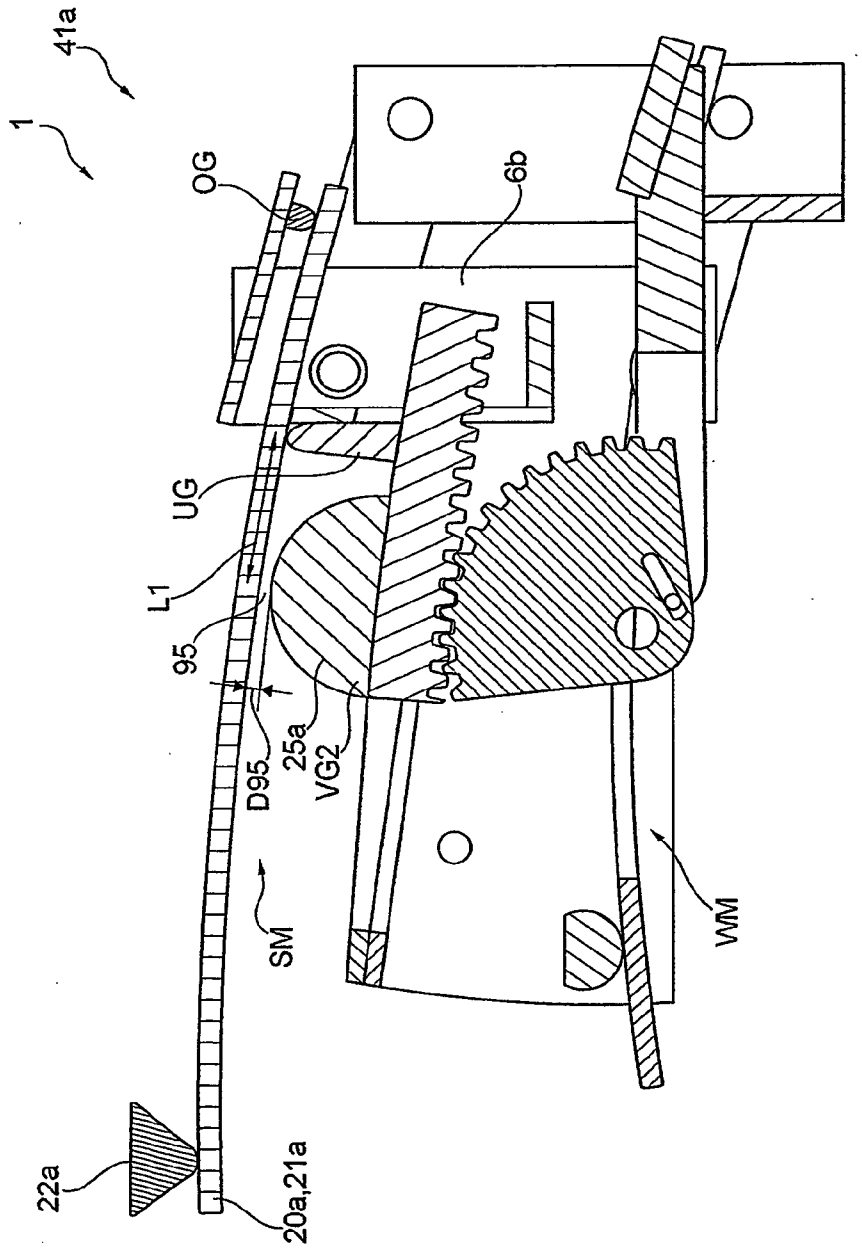

Fig. 8a

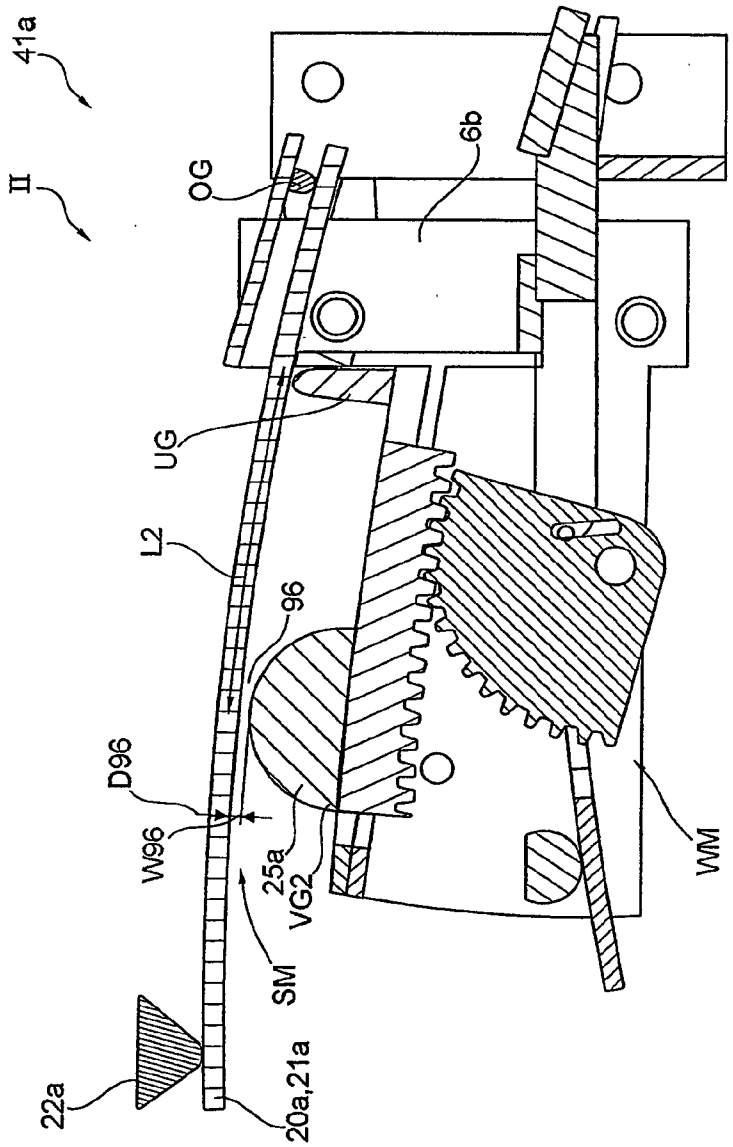

Fig. 8b

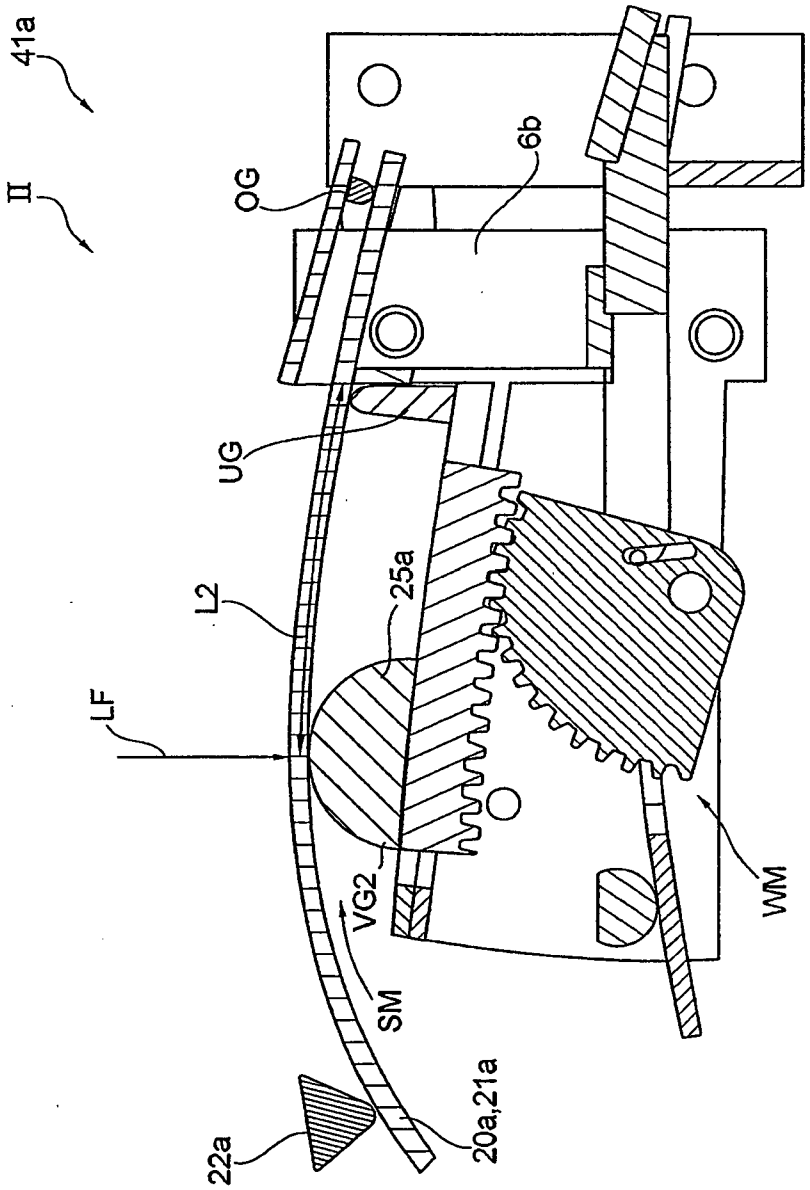

Fig. 8c

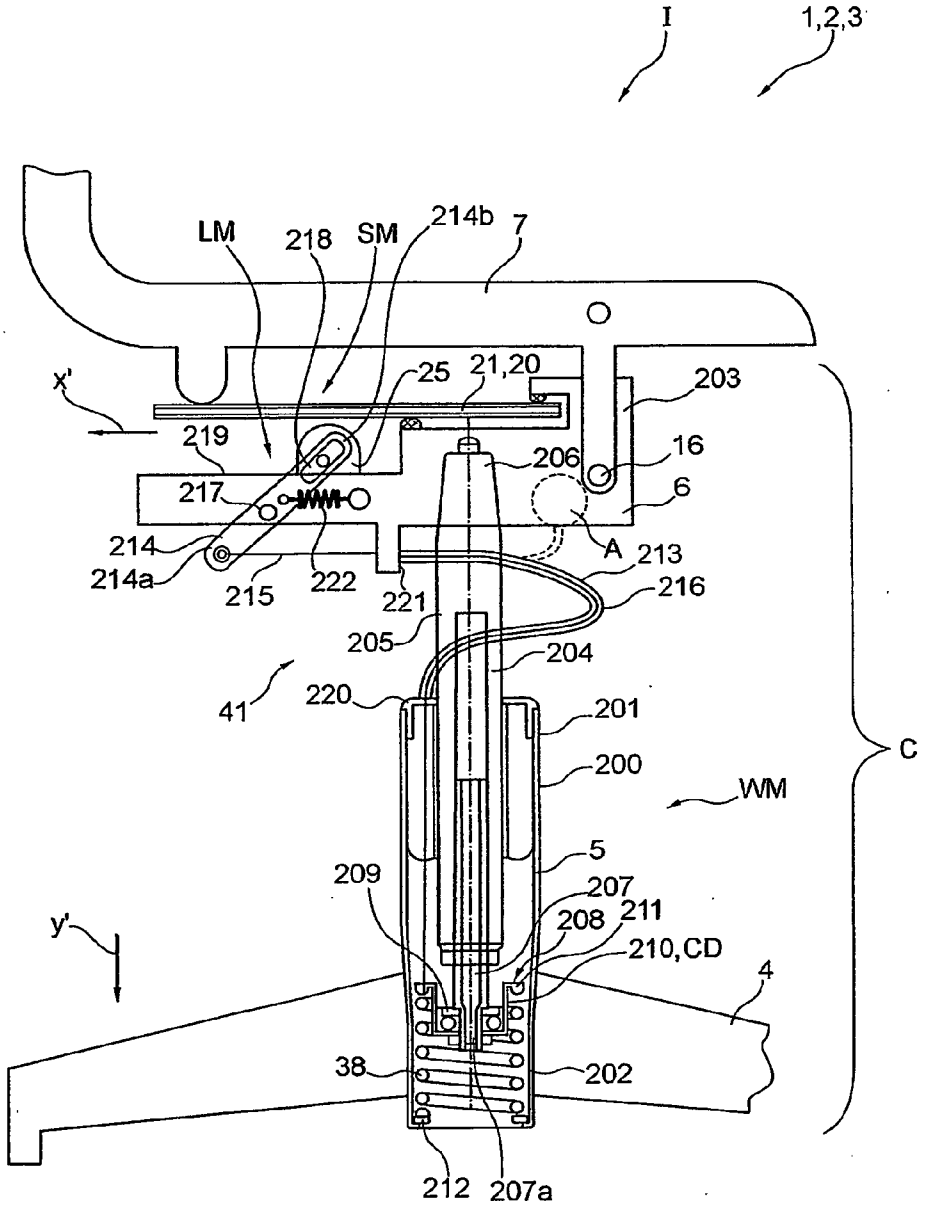
I
1,2,3
LM
218
SM
214b
7
25
21,20
203
x'
219
206
16
217
6
214
A
213
214a
215
222
221
216
205
204
41
220
201
200
C
WM
5
209
207
y'
208
211
210,CD
4
38
202
212
207a

Fig. 9a

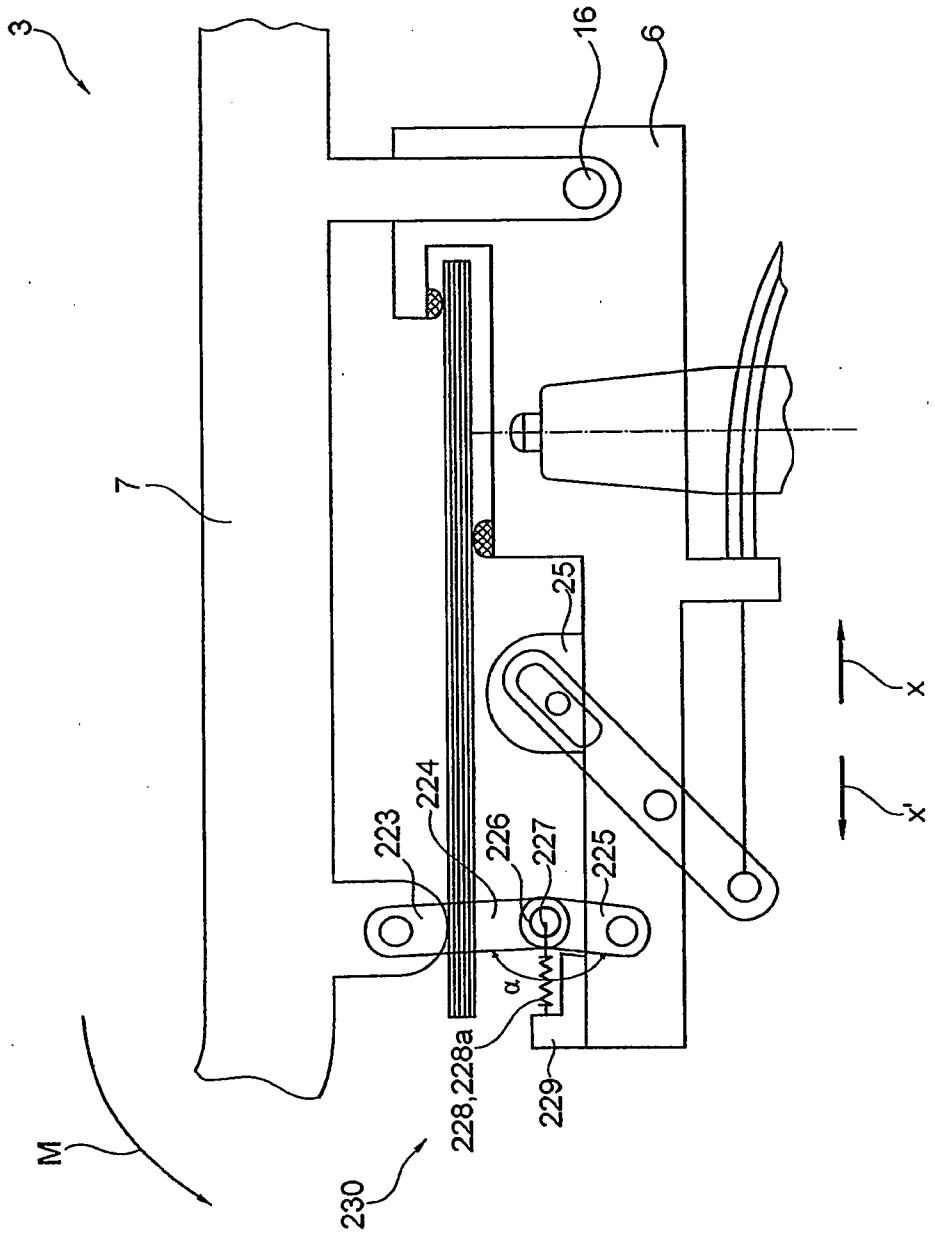

Fig. 9b

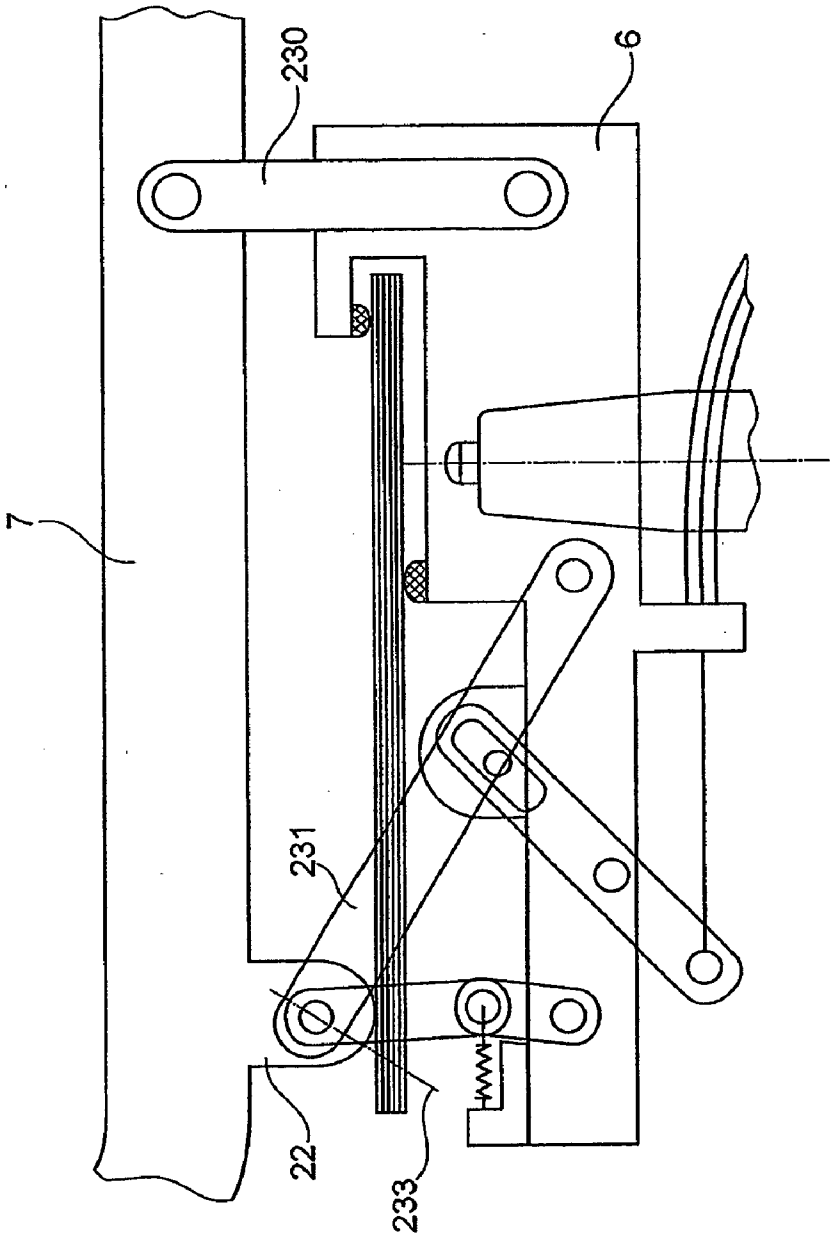

Fig. 9c

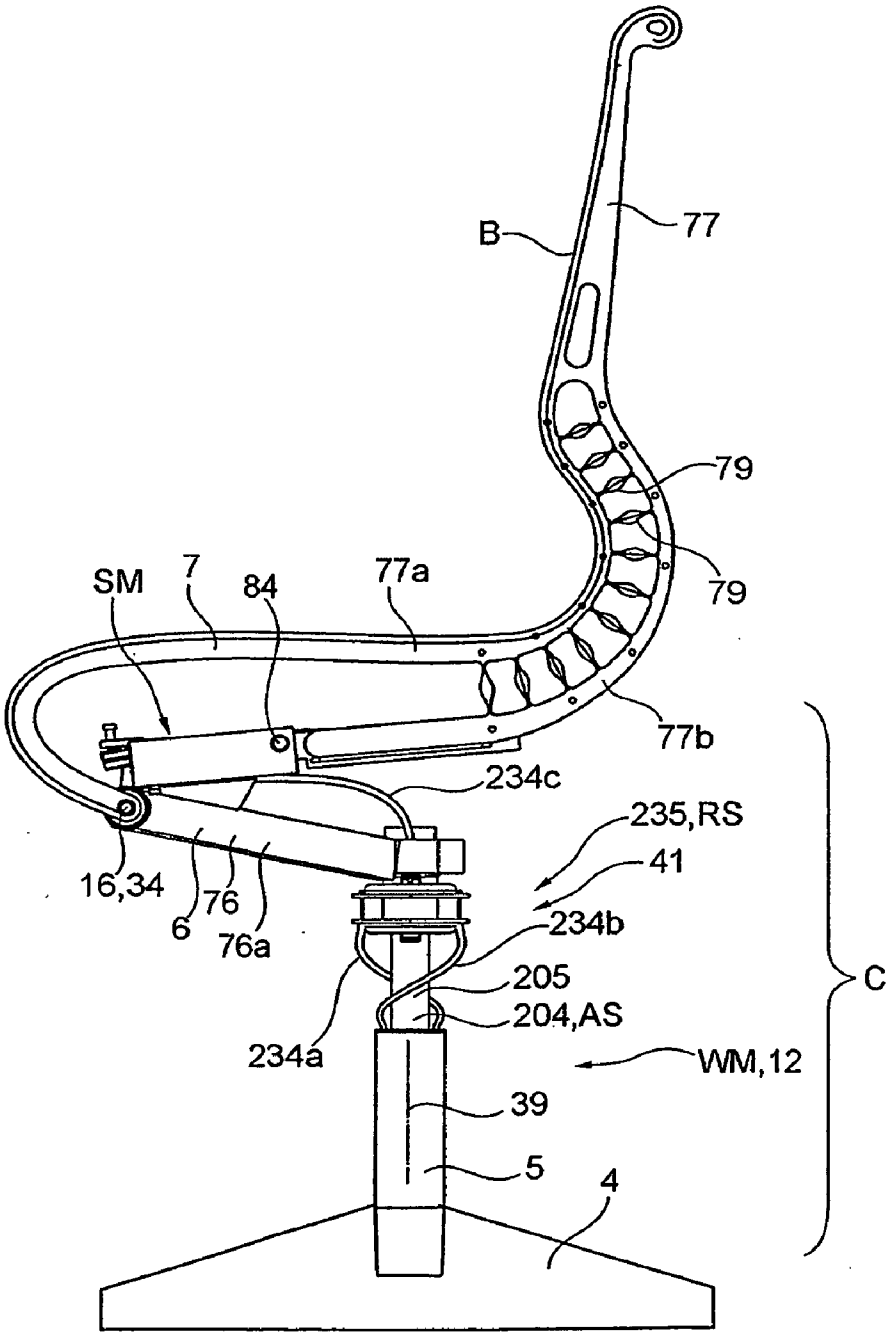
B
77
79
79
SM
7
84
77a
77b
234c
235,RS
41
16,34
76
6
76a
234b
205
204,AS
234a
WM,12
39
5
4
C

Fig. 10a

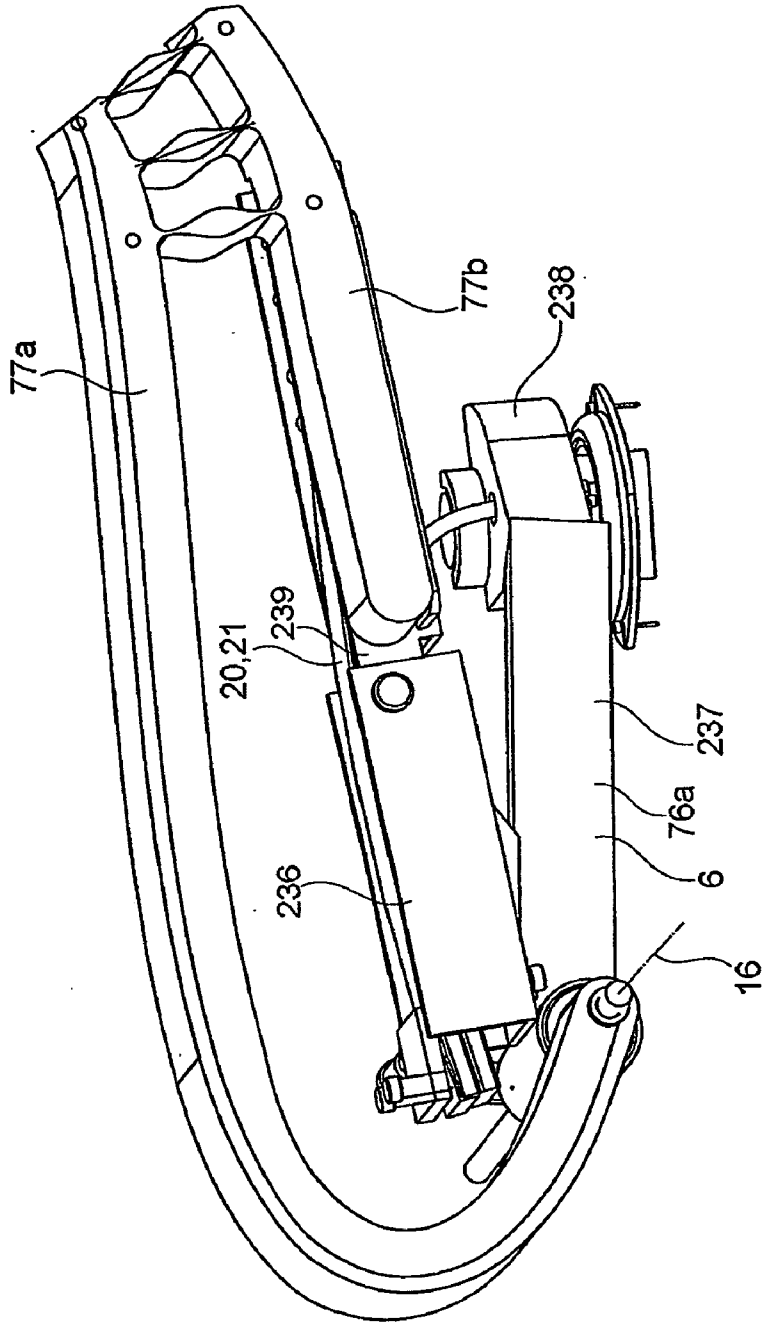

Fig. 10b

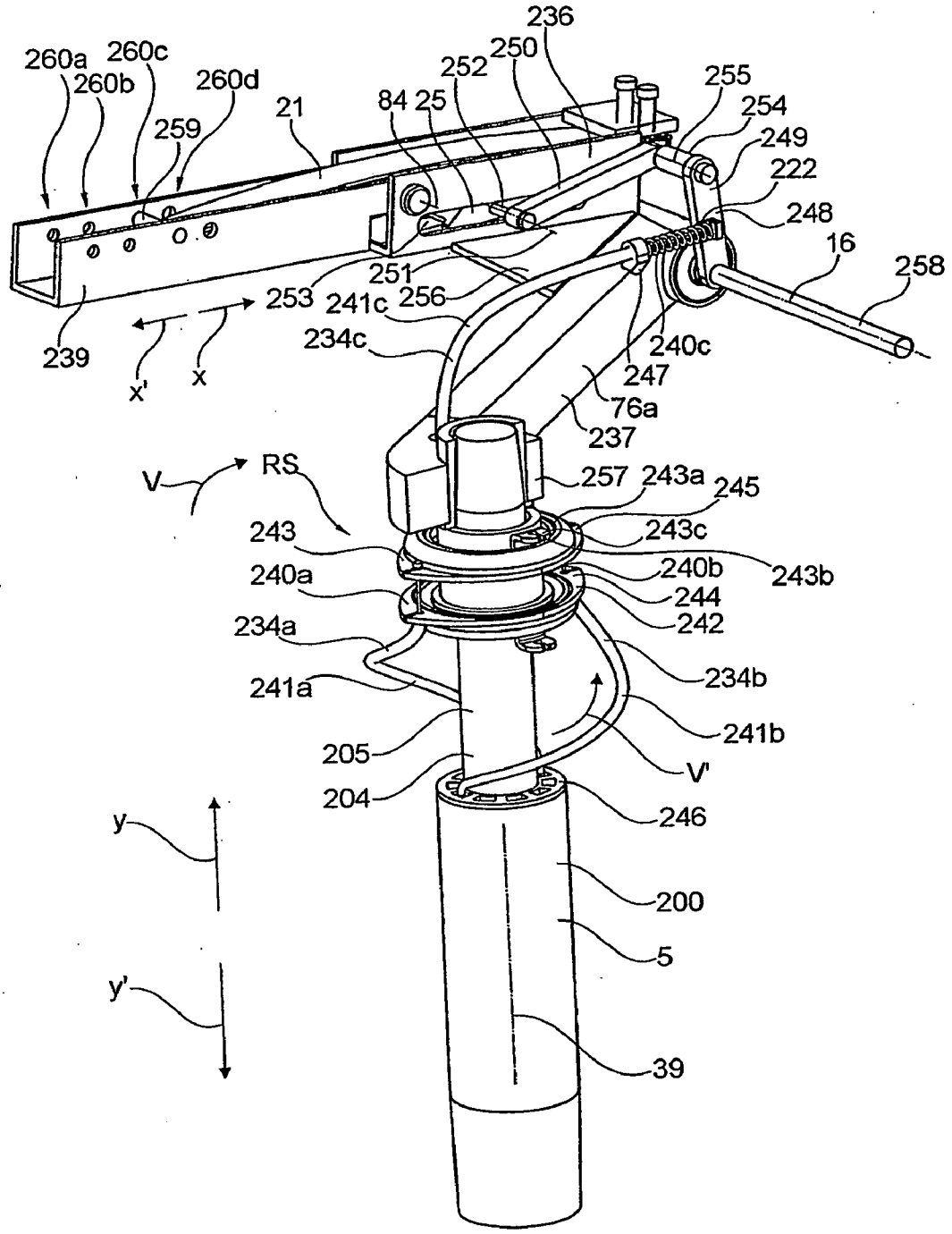
236
260a
260c
260b
260d
259
21
84
25
252
250
255
254
249
222
248
16
258
251
253
241c
256
239
x'
x
234c
240c
247
76a
237
V
RS
257
243a
245
243
243c
240a
240b
243b
244
242
234a
234b
241a
241b
205
V'
204
246
y
200
5
y'
39

Fig. 10c

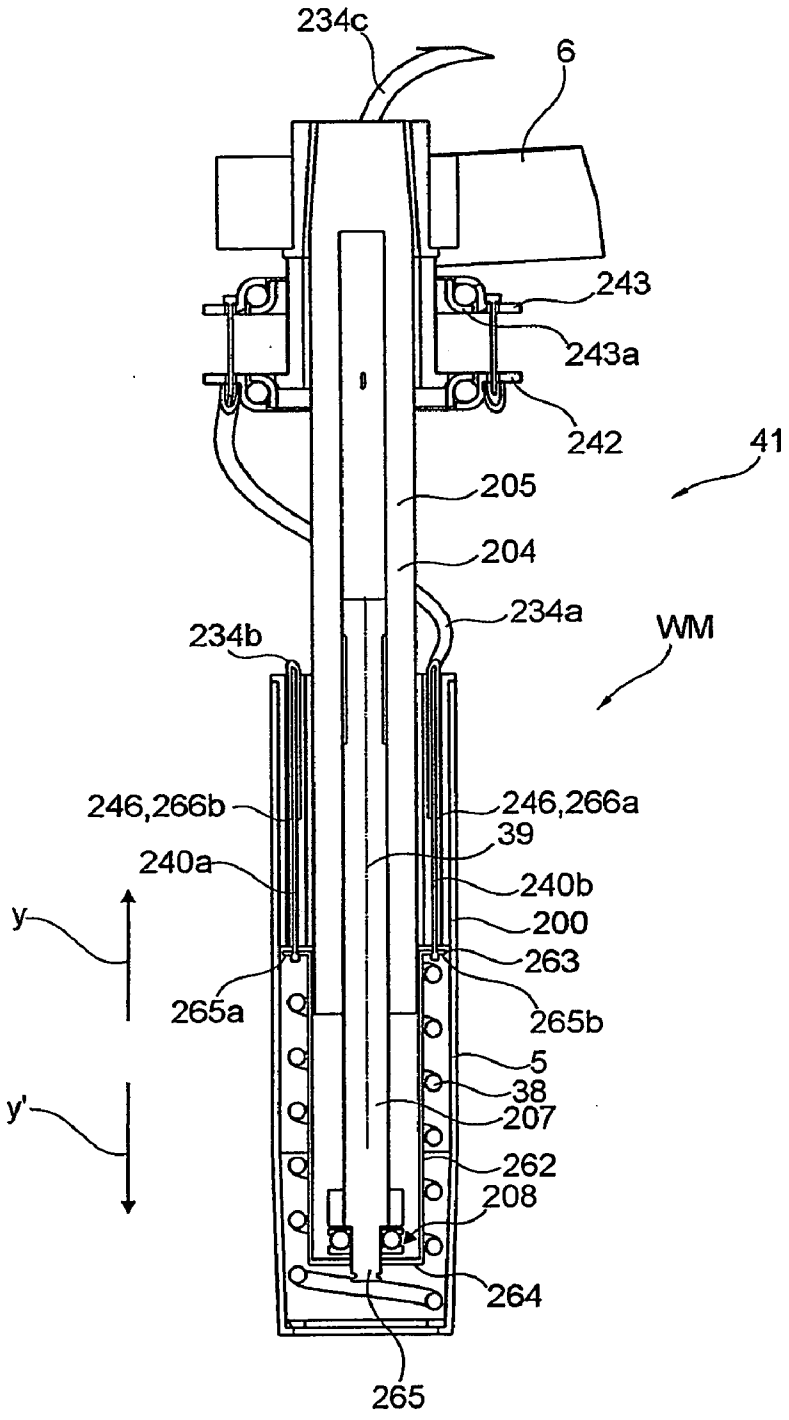
234c
6
243
243a
242
41
205
204
234a
WM
234b
246,266b
246,266a
39
240a
240b
y
200
263
265a
265b
5
38
y'
207
262
208
264
265

Fig. 10d

PIECE OF FURNITURE

[0001] The invention relates to a piece of furniture, in particular a body support structure, including for example a piece of furniture for sitting on or a piece of furniture for lying on, such as, for example, chair, armchair, stool, bed or sofa, according to the precharacterizing clause of claim **1**.

[0002] DE 37 00 447 A1 discloses a piece of furniture for sitting on, in which the body weight of a person is detected via the loading of a seat part and in which the leaning force required in order to adjust the inclination of the back part is to be adjusted as a function of the weight force of the person. This automatic adaptation takes place by a spring being compressed by the weight force of the person, with the backrest carrier acting against this compressed spring. A disadvantage of a piece of furniture of this type for sitting on is that, here, only the weight force acting on the seat part can be detected. A weight force introduced via the back part or armrests which may be present cannot be correctly detected by the mechanism, since it is dissipated via the coupling of the carrier of the back part also to the seat carrier. This may possibly result in too weak a reaction force of the carrier of the back part.

[0003] Furthermore, U.S. Pat. No. 5,080,318 discloses a control device for the inclination of a chair comprising a weighing device which causes an adjustment of a tension device for a leaf spring which supports an inclination of the seat, the adjustment travel being dependent on the weight of a user. A control device of this type has the disadvantage that the weighing of a user and therefore the setting of the leaf spring take place under load and are therefore sluggish and consequently slow and inaccurate.

[0004] The object on which the invention is based is to develop a body support structure, such as a piece of furniture, in particular a piece of furniture for sitting on, in which a spring mechanism which supports a reclining of a person can be adapted to the weight of the person, while weighing is to be smooth and is to take place quickly and accurately. Furthermore, the object of the invention is to develop a body support structure, such as a piece of furniture, in particular a piece of furniture for sitting or lying on, with a weighing mechanism for controlling the spring mechanism, in which the weighing mechanism can be produced cost-effectively.

[0005] This object is achieved, for example and without limitation, by means of the features of claim **1**, of claim **66** and claim **73**. The subclaims specify advantageous and expedient developments.

[0006] The body support structure according to the invention has a base, on which at least one seat is articulated, the seat comprising a seat part and a back part, an inclination of the seat about at least one axis of rotation being supported by at least one spring mechanism acting between the seat and the base, the spring mechanism comprising a lever arm and a support, the support being movable out of a position of rest along a curve into different working positions, the support assuming the position of rest when the seat is nonloaded, the support assuming one of the working positions as a function of a weight force with which a person sitting in an upright sitting posture loads the seat, the support being movable freely of a engaging force, which can be generated by the lever arm (**51**), between its position of rest and one of the working positions, as long as the person is sitting on the seat in the upright sitting posture, the support being engaged by the lever arm by means of the engaging force when the person reclines from his upright sitting posture against the back part into a rearwardly inclined sitting posture, a reaction force of the spring mechanism on the seat being adaptable to the respective weight force of the person by means of the working position of the support. A spring mechanism is thereby available, in which a fixing of the spring mechanism to a set value takes place only when the person reclines. The support and the lever lowerable onto the support thus come into contact with one another only when the person using the piece of furniture reclines and a supporting of the inclination movement is required. Such a low-friction setting of the spring mechanism allows an accurate setting of the spring mechanism, since, even then, an unbraked adjustment of the support under the lever is still possible when the person loads the seat with his entire weight. This ensures that the spring mechanism can reach, uninfluenced, the set value which corresponds to the weight of the person. Furthermore, as soon as the person sits upright, the spring mechanism can set itself to a change in the load. This makes it possible, for example, to vary the set value when the person grasps heavy files. By the set value being readjusted in this way, in particular, accidents can be prevented, since increased loading which takes place in the upright sitting posture always gives rise to a tauter supporting of an inclination movement by means of the spring mechanism.

[0007] The invention provides for designing the lever arm as a spring element and, in particular, as a leaf spring. A version of this type makes it possible to have a slender form of construction and to generate high spring forces.

[0008] Alternatively or additionally, the invention provides for designing the support as a spring element and, in particular, as a helical spring. By means of a design of this type, particularly compact spring mechanisms can be implemented.

[0009] The invention provides for absorbing a torque which is generated about the axis of rotation of the seat by the person sitting in the upright sitting posture on the seat by means of a prestress of the spring element. The unbraked movability of the support can thereby be ensured without additional outlay, even in the case of furniture designs in which the axis of rotation about which the seat is inclined does not lie directly below the center of gravity of a person sitting upright.

[0010] There is also provision for absorbing the abovementioned torque by means of an additional spring supporting the lever arm. A design of this type is advantageous particularly when the support is designed as a spring element, since no prestress can be generated by the latter without influencing the smoothness of the spring mechanism.

[0011] The invention also provides for absorbing the abovementioned torque by means of a temporary blocking of the rotational movement of the seat about the axis of rotation. By means of a design of this type, particularly high torques can be absorbed at low outlay. For this purpose, the invention provides, in particular, a blocking mechanism which comprises, in particular, a toggle lever which bears under prestress against an abutment, the prestress being capable of being generated by a spring element.

[0012] Furthermore, the invention provides for moving the support by means of an operating element. In particular, a handwheel with a weight scale is provided as operating element. A positioning of the support by means of a handwheel is suitable particularly for pieces of furniture which are regularly used by only one person.

[0013] According to the invention, the base comprises at least one lower part, one middle part and one upper part, the seat being articulated on the upper part, the upper part being guided upward or downward on the middle part, the upper part being supported on the middle part by at least one weighing mechanism, the upper part moving with respect to the middle part, during a first loading of the seat with the first weight force, out of a first position into a second position, counter to a restoring force of the weighing mechanism, with a first weighing movement over a first weighing distance, the upper part moving with respect to the middle part, during a second loading of the seat with the second weight force, out of the first position into a third position, counter to the restoring force of the weighing mechanism, with a second weighing movement over a second weighing distance, this weighing movement of the upper part over the weighing distance being convertible into a traveling movement of the support of the spring mechanism by means of at least one movement converter. A piece of furniture can thereby be implemented which is set automatically to persons of different weight. Due to this automatic self-setting of the piece of furniture, even high loads which may occur in various components if supporting is incorrectly set are avoided. The individual components can thus have comparatively light and therefore cost-effective dimensioning. Due to the sole articulation of the seat on the upper part and to the supporting of the upper part on the middle part by the second spring element, the weight force can be detected, irrespective of whether it acts on a seat part and/or a back part and/or armrests of the seat. Furthermore, by an inclination movement of the seat being supported by the first spring element and by the spring force of the first spring element being set as a function of the weight force, this ensures a reaction of the seat which is oriented in terms of the weight force which exerts load on the entire seat. The essence of the invention, therefore, is the use of a first spring element for supporting the inclination movement of the seat, the use of a second spring element for detecting the weight force acting on the entire seat and, finally, the variation in the spring force of the first spring element as a function of the weighing distance which brings about the weight force against the second spring element. In this case, the weight-dependent variation in the spring force of the first spring element is brought about by a displaceable support which can be adjusted contactlessly and therefore very smoothly and quickly as a function of the weight of the user, as long as the user does not recline in the seat. Due to the smooth movement of the spring mechanism, even the weight of a light person who sits down slowly and gently can be detected correctly. The weight of a heavy person who lets himself fall into the seat can likewise be detected correctly. The movement converter operates as a link between the weighing mechanism and the spring mechanism.

[0014] The invention provides a mechanical and/or electrical and/or electronic and/or pneumatic and/or hydraulic movement converter between the weighing mechanism (WM) and the spring mechanism. This also makes it possible to produce pieces of furniture for special applications, for example for vehicles.

[0015] The invention provides, furthermore, for using the middle part and the upper part as components of the movement converter. The movement converter can thereby be constructed cost-effectively with few components.

[0016] Furthermore, the invention provides for guiding the support on the curve, the curve running, in the position of rest of the piece of furniture, at an approximately constant spacing with respect to the lever arm or to the leaf spring designed as a lever arm. Owing to the run of the curve, it is possible to take into account a lowering of the lever arm during the traveling movement of the support and therefore to prevent the lever from coming to lie prematurely on the support.

[0017] A design variant of the invention provides for the support to move motorized along the curve. A continuous mechanical connection between the weighing mechanism and the spring mechanism may thereby be dispensed with.

[0018] According to the invention, there is also provision for detecting the weighing distance electrically or electronically. As a result of this, too, a continuous mechanical connection between the weighing mechanism and the spring mechanism may be dispensed with.

[0019] The invention provides for articulating the spring element of the spring mechanism on the upper part and for supporting the seat with respect to the upper part. An unfalsified detection of the loading of the seat between the upper part and the middle part is thereby possible.

[0020] Furthermore, the invention provides for arranging a height adjustment device between the lower part and the middle part. A conventional height adjustment device can thereby be used, since this is arranged independently of the spring mechanism, the weighing mechanism and the movement converter.

[0021] According to a design variant, there is provision for arranging a height adjustment device between the middle part and the upper part. In such an arrangement of the height adjustment device, it is possible to integrate the height adjustment device into the weighing mechanism.

[0022] The invention provides solely a vertical component for each weighing movement. Particularly accurate weighing is thereby possible, since even the slightest falsifications are avoided.

[0023] A design variant of the invention provides a vertical component and a horizontal component for each weighing movement, the vertical component being greater than the horizontal component. Numerous additional variants are thereby available for the design of the weighing mechanism, a falsification of the weighing result nevertheless being kept within the tolerance range. It is particularly advantageous if the vertical component has at least four times the value of the horizontal component. A measurement error is thereby reduced to an acceptable size.

[0024] The invention also provides for implementing the movement converter by a drive body guided movably on the upper part, with a slot, and a pin which is arranged on the middle part and which is guided in or on the slot. It is thereby possible to implement a mechanically smoothly and accurately operating movement conversion in which, for example, a rotational movement is generated and is converted into a sliding movement.

[0025] The invention provides for arranging the weighing mechanism centrically with respect to a vertically standing axis of rotation of the piece of furniture. The weighing mechanism can thereby be installed in a space-saving way particularly in swivel chairs.

[0026] In particular, the invention provides for forming the weighing mechanism by the height adjustment device. A particularly space-saving and cost-effective design is thereby possible, since some components fulfill functions of the height adjustment device and functions of the weighing mechanism.

[0027] The invention provides a height adjustment device which comprises a settable spring, an axial bearing and the spring element, the settable spring comprising a pressure tube and a piston rod movable in the latter. In a height adjustment device of this type, the spring element may also assume the function of the spring element of a weighing mechanism.

[0028] The invention provides for arranging between the axial bearing and the spring element an adaptor which is designed, in particular, as a cup. A compact design is thereby possible, the cup, together with its slits, serving as a device for fastening at least one movement converter.

[0029] The invention provides, in particular, a movement converter which comprises at least one Bowden cable and at least one lever mechanism. Owing to a movement converter constructed in this way, a cost-effective and flexible connection between the weighing mechanism and the movement converter is possible.

[0030] Furthermore, the invention provides for supplementing the movement converter by a coupling which is arranged on the pressure tube of the settable spring, the coupling comprising a lower ring, an upper ring and an inner ring. The movement converter can thereby be decoupled in a simple way from a rotational movement of the seat about the vertical axis of rotation.

[0031] The invention also provides a seat having at least two carriers. As a result, seats of different width can be produced by means of the same components.

[0032] Furthermore, the invention provides for equipping each carrier of the seat with a specific spring mechanism, the latter being connected to a specific weighing mechanism via a specific movement converter. As a result, each carrier of the seat can be supported against an inclination movement about its horizontal axis of rotation in accordance with its individual load.

[0033] Alternatively, the invention provides for assigning a specific spring mechanism to each carrier and for connecting the spring mechanisms to a central weighing mechanism by means of a movement converter. The piece of furniture can thereby be produced cost-effectively, since only one weighing mechanism is required for controlling the spring mechanisms.

[0034] The invention also provides for designing the carriers with an upper leg and a lower leg, the carriers in each case being supported with their upper leg on a spring element of the respective spring mechanism. A space-saving arrangement of the spring mechanism between the legs is thereby possible.

[0035] The invention provides, furthermore, for connecting the legs of the carrier to one another by means of spokes. Forces can thereby be transmitted between the legs of a carrier in a directed manner, in order to determine desirably the bending behavior of the carrier.

[0036] The piece of furniture according to the invention comprises a weighing mechanism which is formed by a height adjustment device, the height adjustment device comprising a settable spring with a pressure tube and with a piston rod movable in the pressure tube, an axial bearing and a spring element, the weighing mechanism having a device for fastening a movement converter. A height adjustment device modified in this way can also be used as a weighing mechanism to which a movement converter can be connected.

[0037] Further details of the invention are described by means of exemplary embodiments illustrated diagrammatically in the drawing in which:

[0038] FIGS. **1***a*-**1***d* show diagrammatic views of four basic variants of a piece of furniture designed as a chair;

[0039] FIGS. **1***e*-**1***h* show diagrammatic views of a standing and sitting person;

[0040] FIGS. **2***a*-**2***c* show a diagrammatic illustration of a piece of furniture according to the invention in two positions;

[0041] FIG. **3** shows an enlarged illustration of a weighing mechanism, a spring mechanism and a movement converter of a piece of furniture according to the invention;

[0042] FIGS. **4***a*-**4***c* show diagrammatic illustrations of further design variants of a piece of furniture according to the invention;

[0043] FIGS. **5***a*-**5***c* show a diagrammatic illustration of a further piece of furniture according to the invention in a nonloaded and a loaded position;

[0044] FIGS. **6***a*-**6***e* show five variants of a weighing mechanism, a spring mechanism and a movement converter of a piece of furniture according to the invention;

[0045] FIGS. **7***a*-**7***f* show six illustrations of a further design variant of a piece of furniture according to the invention;

[0046] FIGS. **8***a*-**8***c* show three illustrations of a movement converter;

[0047] FIGS. **9***a*-**9***c* show diagrammatic illustrations of three further design variants of a piece of furniture according to the invention, and

[0048] FIGS. **10***a*-**10***d* show four illustrations of a further design variant of a piece of furniture according to the invention.

[0049] FIGS. **1***a* to **1***d* illustrate four basic variants of a body support structure **1** according to the invention, which are shown for example and without limitation as a piece of furniture for sitting on **2** in the form of a chair **3**. All four pieces of furniture **1** comprise essentially a lower part **4**, a middle part **5**, an upper part **6** and a seat **7**. It should be understood that the invention can also be incorporated, without limitation, into other body support structures such as beds, sofas, benches, vehicle and/or aircraft seats, etc. All the components **4**, **5**, **6** carrying the seat **7** are also designated in summary as a base C. The seat **7** is in each case articulated on the upper part **6** which is connected to the middle part **5**. The middle part **5** is carried by the lower part **4**. The lower part **4** is designed in FIG. **1***a* as a foot **8**, in FIG. **1***b* as a wall holder **9**, in FIG. **1***c* as a ceiling holder **10** and in FIG. **1***d* as a swing **11**. FIG. **1***a* also shows, in principle, the arrangement of a height adjustment device **12** between the lower part **4** and the middle part **5**.

[0050] FIGS. **1***e* to **1***h* show diagrammatic views of a person P and of a piece of furniture **1**. In FIG. **1***e*, the person P is standing in front of the piece of furniture **1**. In FIG. **1***f*, the person P is sitting upright in an upright sitting posture P**1** on a seat part **13** of a seat **7** of the piece of furniture **1** and in this case subjects a back part **14** of the seat **7** to no or only insignificant load. In FIG. **1***g*, the sitting person P reclines backward into a rearwardly inclined sitting posture P**2** and in this case experiences a counterforce due to the back part **14** of the seat **7** of the piece of furniture **1**. In FIG. **1***h*, the person P leans forward into a forwardly inclined sitting posture P**3**.

[0051] FIGS. **2***a* and **2***b* show diagrammatic illustrations of a piece of furniture **1** according to the invention in two positions I (see FIG. **2***a*) and II (see FIG. **2***b*). The piece of furniture **1** comprises a lower part **4**, a middle part **5**, an upper part **6** and a seat **7**. The seat **7** comprises a seat part **13** and a back part **14** which are connected to one another in an articulated manner by means of an axis of rotation **15**. The seat part

13 is articulated rotatably with an axis of rotation **16** on the upper part **6**, and the back part **14** is guided via an arm **17** with an axis of rotation **18** on the upper part **6**, the arm **17** also being connected rotatably with an axis of rotation **19** to the back part **14**. A first spring element **20** designed as a leaf spring **21** is fastened to the upper part **6**. The first spring element **20** extends as a lever arm **51** approximately horizontally beneath the seat part **13** of the seat **7**, and the seat part **13** lies with a projection **22** on the first spring element **20** in the region of a free end **23** of the latter. The first spring element **20** has a prestress and is supported between a tension end **24** and the free end **23** by a support **25** only when there is a corresponding load. The support is held by a slide **26**. The support **25** and the spring element **20** form a spring mechanism SM. The support **25** is designed as a roller **27**. The slide **26**, which carries the support **25**, is guided laterally movably in a guide **28** on the upper part **6** and lies with a lower end **29** on an inclined plane **30** of the middle part **5**. The upper part **6** is guided movably upward and downward on the middle part **5** via two arms **31**, **32** oriented parallel to one another, the arms **31**, **32** being connected in each case to the middle part **5** and the upper part **6** rotatably about axes of rotation **33** to **36** running into the drawing plane. The downward movement or the upward movement of the upper part **6** together with the seat **7** is braked or assisted by a second spring element **37**. The second spring element **37** is arranged between the upper part **6** and the middle part **5** and is designed as a helical spring **38**. The spring element **37** and the arms **31** and **32** form a weighing mechanism WM. Finally, the middle part **5** is mounted on the lower part **4** rotatably about a vertical axis of rotation **39**.

[0052] In FIG. **2***a*, which shows the piece of furniture **1** in the position I, the piece of furniture **1** or the seat **7** is nonloaded and is in a position of rest. That is to say, no person is sitting on the piece of furniture **1**. The upper part **6** therefore stands at a level N**1** at which the second spring element **37** has to compensate only the weight of the upper part **6** and of the seat **7**. In this position I of the piece of furniture **1**, the slide **26** stands in a left position S**1**. A supporting of an inclination movement of the nonloaded seat **7** about the axis of rotation **16** in a direction of rotation w on the projection **22** takes place via the first spring element which is not in contact with the support **25**. The nonloaded piece of furniture **1** according to the invention has to generate by means of its first spring element **20** only a comparatively low reaction force R**1** to an inclination of the seat **7** about the axis of rotation **16** in the direction of rotation w, since, in this situation, only a torque M generated due to the dead weight of the seat **7** is to be absorbed. Basically, an interspace **95** having a thickness D**95** lies between the support **25** or its contact surface KF and the first spring element **20** or the leaf spring **21** (see FIG. **2***c* with a diagrammatic sectional view along the sectional line IIc-IIc illustrated in FIG. **2***a*). This interspace **95** is brought about by a prestress of the leaf spring **21** which is selected such that the leaf spring **21** stands with play above the contact surface KF of the support **25** and a movement of the support **25** can take place according to a weight force **40** (see FIG. **2***b*), without the leaf spring **21** impeding or braking the support **25**.

[0053] In FIG. **2***b*, which shows the piece of furniture **1** in the position II, the piece of furniture **1** or the seat **7** is loaded by the weight force **40** of a person, not illustrated, sitting upright and is in a working position. The upper part **6** is lowered to a level N**2** at which the second spring element **37** has to compensate the weight of the upper part **6**, the weight of the seat **7** and the weight force **40**. In this position II of the piece of furniture **1**, the slide **26** is in a middle position S**2** and with its support **25** supports the first spring element **20** between its tension end **24** and its free end **23**, insofar as the person leans backward and thereby increases the loading of the spring element **20**. An increased reaction force R**2** is available for supporting an inclination movement of the person together with the seat **7** about the axis of rotation **16** in a direction of rotation w as soon as the leaf spring **21** comes to lie on the support **25** as a result of the displacement of the person and engages said support **25** under itself with a engaging force LF. Thus the support **25** is clamped by a clamping force in its actual position. The loaded piece of furniture **1** according to the invention thus generates a reaction force R**2** to an inclination of the seat **7** about the axis of rotation **16** in the direction of rotation w. The reaction force R**2** is higher than the reaction force R**1** due to an additional support of the leaf spring **21** on the support **25** and is thus adapted to the loading of the piece of furniture **1**. As soon as the person sitting on the piece of furniture **1** resumes an upright sitting position, this also gives rise in the position II to an interspace **95**, shown in FIG. **2***c* for the position I, between the leaf spring **21** and the support **25** or its contact surface KF. That is to say, the piece of furniture **1** regains the smooth movability of the support **25** with respect to the leaf spring **21** as soon as the person changes from a reclined sitting position into an upright sitting position. Between the position I and the position II, the spacings F**1**, F**2** between the support **25** and the projection **22** vary as a function of the person's weight.

[0054] The difference between the levels N**1** and N**2** of the upper part **6** in positions I and II is designated as the weighing distance W**1**, and the spacing between the positions S**1** and S**2** of the slide **26** is designated as the displacement distance V**1**.

[0055] The upper part **6** and the middle part **5** thus form with one another a movement converter **41** which converts the weighing movement against the second spring element **37** into a displacement movement, by which the first spring element **20** is influenced in its reaction force R**1** or R**2** on the seat **7**. The second spring element **37** or the spring mechanism SM is influenced as a function of the weighing movement, although the weighing movement cannot be influenced by an inclination movement of a person sitting on the piece of furniture **1** and reclining. The weight force **40** of the person is detected completely, independently of his position on the seat **7**, solely due to the articulation of the seat **7** on the upper part **6**. The seat **7**, shown in FIGS. **2***a* and **2***b*, is designed in the manner of a known synchronous mechanism which, when a person reclines in the seat **7**, gives rise to a different increase or decrease in the inclination of the seat part **13** or of the back part **14**. The arms **32**, **33** and the spring element **37** form the weighing mechanism WM by means of which the weight force **40** of a person sitting on the seat can be detected. The weighing mechanism WM gives rise via the movement converter **41** to a setting of a spring mechanism SM according to the weight force **40** of the person using the piece of furniture **1**. The spring mechanism SM is formed essentially by the first spring element **20** or the leaf spring **21** and the support **25**, the support **25** cooperating with the leaf spring **21** only when a person sitting on the piece of furniture **1** reclines into a rearwardly inclined sitting position P**2** described in FIG. **1***g*.

[0056] FIG. **3** illustrates a diagrammatic view of a movement converter **41** which is constructed in a similar way to the movement converter shown in FIGS. **2***a* to **2***c* and is arranged

between a weighing mechanism WM and a spring mechanism SM. For simplification, an upper part **6** is shown here without articulation points for a seat.

[0057] The movement converter **41**, the weighing mechanism WM and the spring mechanism are illustrated in three positions I, II. and III. In position I, shown by thick unbroken lines, the arrangement is nonloaded. The arrangement is therefore not loaded by a person sitting on the seat, not illustrated. When the arrangement is loaded via the seat, not illustrated, with a first weight force **40** of a first person, the upper part **6** is lowered counter to a second spring element **37** in the direction of an arrow y' downward toward a middle part **5** into the second position II. The second position II is illustrated by thin unbroken lines. Lowering takes place according to the articulation of the upper part **6** on the middle part **5** via two parallel arms **31** and **32** on a circular path **42**.

[0058] When the arrangement is loaded via the seat, not illustrated, with a second weight force **40***a* of a second person which is greater than the first weight force, the upper part **6** is lowered counter to the second spring element **37** in the direction of the arrow y' downward toward the middle part **5** into the third position III. The third position III is illustrated by thin broken lines. Lowering again takes place according to the articulation of the upper part **6** on the middle part **5** via two parallel arms **31** and **32** on the circular path **42**. In positions I and II, the upper part has levels N**1** and N**2**, the difference of which corresponds to a weighing distance W**1**. This weighing distance W**1** is converted via a drive **43** and an output **44** into a displacement distance V**1** which is defined as a path difference between positions S**1** and S**2** of a slide **26**. The drive **43** comprises a guide **28** on the upper part **6** and an inclined plane **30** on the middle part **5**. These two components give rise, due to a lowering of the guide **28** together with the upper part **6**, to a lateral displacement movement of the slide **26** which forms the output **44**. In other words, the upper part **6**, together with the middle part **5** or with the transmission mechanism operating as a movement converter **41**, forms a gear **45** for converting a weighing movement into a displacement movement. In positions I and III, the upper part has the level N**1** and a level N**3**, the difference of which corresponds to a weighing distance W**2**. This weighing distance W**2** is converted via the gear **45** into a displacement distance V**2** which is defined as the path difference between the position S**1** and a position S**3** of the slide **26**. The slide **26** slides in the guide **28** from the position S**1** into the position S**2**, a support **25**, fastened vertically movably to the slide **26**, for a first spring element **20** moving on the upper part **6** along a curved path **46** which runs at an approximately constant spacing with respect to a curved run of the first spring element **26** designed as a leaf spring **21**. By the path **46** being coordinated with the run of the leaf spring **21**, it is possible to avoid a jamming of the support **25** under the spring element **20** in any position of the support **25** or slide **26** and to ensure a smooth movement of the support **25**. The smooth movement of the support **25** is implemented by the formation of an interspace **95**, **96** and **97** in any position of the support **25**, insofar as the piece of furniture **1** is not loaded by a reclining person. As regards the structural implementation of the interspaces, reference is made to FIG. **2***c* which has similar validity for FIG. **3**. Owing to the smooth moveability which the support achieves as soon as the person sitting on the chair assumes an upright sitting position, a sensitive readjustment of the position of the support **25** is also possible if, for example, the person using the chair grasps a heavy file and puts this down again later. The vertical moveability of the support **25** is achieved by the guidance of a shaft **47** of the support **25** in long holes **48** arranged on the slide **26**. As a result, during the displacement of the slide **26**, the support **25** can follow the path **46** independently of the run of the guide **28**. In the position S**3** of the slide **26**, belonging to position III, the support **25** has been lowered, according to the run of the path **46**, in the direction y' downward in the long holes **48**. The path **46** is configured in its run in such a way that an undesirable jamming of the support **25** between the path **46** and the leaf spring **21** during weighing is prevented. The run of the path **46** is adapted to the run of the leaf spring **21**. A return of the slide **26** out of the position S**3** or S**2** into the position S**1** takes place, when the seat is relieved of the weight force acting on it, for example, by means of a tension spring **49** which connects the slide **26** to the upper part **6**. Such a tension spring **49** is also provided, for example, for the pieces of furniture illustrated in FIGS. **2***a* and **2***b*. As already mentioned in the description of FIGS. **2***a* and **2***b*, the displacement of the support **25** influences the hardness of the leaf spring **21** with which the latter supports an inclination movement of a seat, not illustrated, on the upper part **6**. In the nonloaded position I, the first spring element **20** basically already has a prestress, by means of which the seat, not illustrated, is already supported against a basic loading of the piece of furniture with, for example, 40 kg. Such a prestress is generated in a tension slit **72** for the leaf spring **21** by the leaf spring **21** being fixed between an upper counterbearing OG and a lower counterbearing UG. In a consideration of the lower counterbearing UG and the support **25**, the lower counterbearing UG is to be defined as a first support and the support **25** as a second support for the leaf spring **21**.

[0059] Furthermore, with regard to the weighing movement on the circular path **42**, FIG. **3** depicts a vertical component VK of the weighing movement and a horizontal component HK of the weighing movement. In the case depicted, the vertical component VK of the weighing movement corresponds to the weighing distance W**2**. In the present case, the vertical component VK is substantially greater than the horizontal component HK. Thus, the weighing result, while having the required accuracy, is falsified at most minimally.

[0060] FIGS. **4***a* and **4***b* show two variants of a piece of furniture **1** in a diagrammatic illustration. In both variants, the illustration of a lower part of the piece of furniture **1** has been dispensed with. FIG. **4***a* shows a middle part **5** which carries an upper part **6** via two arms **31** and **32**. A seat **7** is articulated on the upper part **6** by means of a synchronous mechanism already described with regard to FIGS. **2***a* and **2***b*. In contrast to the pieces of furniture described above, a first spring element **20**, which supports an inclination movement or rotational movement of the seat **7** about an axis of rotation **16** in a direction of rotation w, is designed as a helical spring **50** which is arranged on a slide **26**. The slide **26** is guided, in a similar way to the designs shown in FIGS. **2***a* to **3**, on the upper part **6** in a guide **28** and slides with a lower end **29** on an inclined plane **30** which is formed on the middle part **5**. The upper part **6** guided upward and downward on the middle part **5** on arms **31** and **32** is supported against the middle part **5** by means of a second spring element **37**. Between a projection **22** of the seat **7** and the first spring element **20** is arranged a lever **51** which is articulated on the upper part **6** rotatably about an axis of rotation **52**. The seat **7** is supported from above on the lever **51** via a projection **22**. The lever **51** is supported, in turn, by the first spring element **20** acting against the lever **51** from below as a support **25**, when a

person, not illustrated, sitting on the piece of furniture **1** reclines. As long as the person sitting on the piece of furniture **1** does not recline, the lever **51** is sufficiently supported by the force of a spring **98** which is designed as a helical spring **99**. Owing to the spring **98**, during a traveling movement of the first spring element **20** there is always an interspace **96** between the first spring element **20** and the lever **51**, insofar as the person sitting on the piece of furniture **1** does not recline. FIG. **4***c* illustrates, in this regard, a view of a detail, designated in FIG. **4***b* as IVb, which applies to FIGS. **4***a* and **4***b*. The lever **51**, the spring **50** and the spring **98**, together with a spring mechanism SM, and the arms **31**, **32** and the spring **37** thus form a weighing mechanism WM. A movement converter **41** connecting the weighing mechanism WM and the spring mechanism SM is designed according to the movement converter shown in FIGS. **2***a* and **2***b*. As a function of a position S**1**, S**2** or S**3** of the slide **26** together with the first spring element **20**, different engagement points **53** of the first spring element **20** operating as a support **25** give rise on the lever **51** to a supporting force of differing magnitude against an inclination of the seat **7** about the axis of rotation **16**. The description relating to FIG. **4***a* applies likewise to the piece of furniture **1** shown in FIG. **4***b*. The only difference from FIG. **4***a* is that, here, a seat part **13** and a back part **14** of the seat **7** stand at a fixed angle to one another.

[0061] FIGS. **5***a* and **5***b* show a further design variant of a piece of furniture **1** according to the invention in two different positions I and II, the illustration of a lower part of the piece of furniture **1** having been dispensed with in both figures. An upper part **6** is guided movably upward and downward on a middle part **5** by means of an arm **31** rotatably about axes of rotation **33**, **34** and a roller **55** guided on a cam **54** and is supported on the middle part **5** via a second spring element **37**. Arranged on the upper part **6** is a first spring element **20**, on which a seat **7** articulated on the upper part **6** rotatably about an axis of rotation **16** is supported with a projection **22** against an inclination movement about the axis of rotation **16** in a direction of rotation w. A displacement of a support **25** under the first spring element **20** designed as a leaf spring **21** is achieved by means of a movement converter **41** which connects a weighing mechanism WM and a spring mechanism SM to one another. The movement converter **41** comprises an articulated lever **56** which is composed of a lower lever **56***a* and an upper lever **56***b*. The lower lever **56***a* is connected fixedly to the middle part **5** and is connected to the upper lever **56***b* in a rotationally articulated manner about an axis of rotation **57**. The upper lever **56***b* carries the support **25** which is articulated on this rotatably about an axis of rotation **58**. A lowering of the upper part **6** together with the seat **7** as a result of loading of the seat **7** by a weight force **40** causes a displacement movement of the support **25** out of a position S**1** into a position S**2**, said displacement movement being caused by the articulated lever **56**. The movement converter **41** converts a weighing movement of the upper part **6**, in which the support **25** is taken up on the upper part **6**, into a displacement movement directed laterally in the direction of an arrow x. In the position II of the piece of furniture **1**, as illustrated in FIG. **5***b*, the support **25** stands in the position S**2** as a result of the loading of the seat **7** with the weight force **40** and causes the seat **7** to be supported against an inclination movement according to the weight force. When the piece of furniture **1** is relieved of the weight force **40**, the second spring element **37** raises the upper part **6**, together with the seat **7**, and the support **25** is retracted by the articulated arm **56** in the direction of an arrow x' into the position I shown in FIG. **5***a*. The seat **7** is composed of a seat part **13** and of a back part **14**, the back part **14** being articulated resiliently on the seat part **13** via an elastic element **59**. In the seat **7** illustrated in FIGS. **5***a* and **5***b*, therefore, essentially an inclination movement of the seat part **13** is supported by the first spring element **20**. The back part **14** can spring back even further, independently of this, about an axis of rotation **15** of the seat **7**. The cooperation of the support **25**, of the upper part **6** and of the leaf spring **21** is shown as a detail in FIG. **5***c* according to the section Vc-Vc marked in FIG. **5***b*. As in the previous exemplary embodiments, the support **25** and the leaf spring **21** are spaced apart from one another due to an interspace **96** having a thickness D**96**, as long as a person sitting on the piece of furniture **1** does not recline. The support **25** is guided in a slot N on the upper part **6**.

[0062] FIGS. **6***a* to **6***e* illustrate diagrammatically further design variants of weighing mechanisms WM and movement converters **41** for pieces of furniture **1** according to the invention. The arrangement shown in FIG. **6***a* comprises a middle part **5** and an upper part **6**, the upper part **6** being guided movably upward and downward in a bore **60** in the middle part **5**. The upper part **6** is seated with a column **61** in the bore **60**, the column **61** having a duct **62** which opens toward the bore **60** and leads into a boom **63** of the upper part **6**. The duct **62** is provided for conducting a hydraulic fluid **64** out of a reservoir **65**, formed by the bore **60**, through the duct **62** into the boom **63** as a function of a weight force, acting on the upper part **6**, of a person, not illustrated, sitting on a seat articulated on the upper part **6**. In the boom **63**, the hydraulic fluid **64** acts on a piston **66** which is supported against the upper part **6** by means of a second spring element **37**. The piston **66** carries a support **25** which is displaceable on a path **46** beneath a first spring element **20** and which determines the counterforce of the first spring element **20** against an inclination movement of the seat, not illustrated. When the seat is relieved of the weight force, the hydraulic fluid is pressed back through the duct **62** into the reservoir **65** by the piston **66** onto which the second spring element **37** presses. The upper part **6** together with the seat is raised by means of the hydraulic fluid **64** which then presses onto a piston surface **67** of the column **61**.

[0063] The design variant, illustrated in FIG. **6***b*, of a weighing mechanism WM and a movement converter **41** has an operating mode and design comparable to the arrangement shown in FIG. **6***a*. In contrast to this, here, the force transmission medium used is a magnetorheological fluid **68** which is guided in the reservoir **65** and in the duct **62** in concertinas **69** and **70** in order to ensure optimal sealing off.

[0064] The arrangement illustrated in FIG. **6***c* has an operating mode comparable to the arrangement shown in FIG. **6***b*. In contrast to this, the upper part **6** is not guided in the middle part **5** via a column, but, instead, has a guide by means of arms **31**, **32** which is known, for example, from FIGS. **2***a* and **2***b*.

[0065] FIG. **6***d* shows a purely mechanical variant. In this, an upper part **6** is guided with a column **61** in a bore **60** of a middle part **5**, a second spring element **37** designed as a helical spring **38** being arranged between the column **61** and the middle part **5**. A slide **26** is guided in a way known from previous exemplary embodiments on a boom **63** of the upper part **6** in a guide **28**. The slide **26** has a support **25** and cooperates with an inclined plane **30**. As a result, during a weighing movement of the upper part **6**, the slide **26** is moved laterally under a first spring element **20**. When the movement

converter **41** is relieved of a weight force causing the weighing movement, a tension spring **49** draws the slide **26** in the direction of the column **61** again.

[0066] The arrangement illustrated in FIG. **6***e* has an upper part **6** which is guided with a column **61** in a bore **60** of a middle part **5** against a second spring element **37**. A weighing distance occurring during the compression of the upper part **6** as a result of a loading of a seat, not illustrated, articulated on the upper part **6** is detected by a sensor **71**. A piston **66** is movable motorized in a guide **28** according to the detected weighing distance. The transfer of control signals between the sensor **71** and the motorized movable piston **66** takes place in wired or wireless form. A support **25** is arranged with play in the vertical direction on the motorized movable piston **66** in a way known from previous exemplary embodiments. This moves the piston **66** under a first spring element **20**, designed as a leaf spring **21**, as a function of the detected weighing distance. When the upper part **6** or the seat arranged on the upper part **6** is relieved, the upper part **6** is raised by the second spring element **37**. This lifting movement is likewise detected by the sensor **71** and causes a return movement of the motorized movable piston **66**.

[0067] In the design variants illustrated in FIGS. **6***a* to **6***e*, the first spring element **20** and the support **25** cooperate according to the description relating to FIGS. **2***a* to **2***c*. In particular, the supports **25** are designed according to FIG. **2***c*, and between the first spring element **20** and the support **25** there is no interspace only when a person sitting on the piece of furniture **1** reclines.

[0068] FIG. **7***a* shows a perspective illustration of a piece of furniture **1** according to the invention. The piece of furniture **1** stands in a nonloaded position I and comprises a base C and a seat **7** arranged on the latter. The base C comprises a lower part **4**, a two-part middle part **5***a*, **5***b* and a two-part upper part **6***a*, **6***b*. The lower part **4** comprises a base **75** with wheels W, a height adjustment device **12** and a carrier **76** arranged on the latter. The carrier **76** has two carrying arms **76***a* and **76***b*, on which the middle parts **5***a*, **5***b* are arranged. On each of these two middle parts **5***a*, **5***b* is articulated one of the upper parts **6***a*, **6***b* (see also FIGS. **7***b* and **7***c*). The two upper parts **6***a*, **6***b* carry the seat **7**. The seat **7** comprises a right carrier **77** and a left carrier **78** (see also FIG. **7***c*), and these carry a cloth covering B. The two carriers **77** and **78** have in each case an upper leg **77***a* and **78***a* and a lower leg **77***b*, **78***b*. These are connected in each case by means of at least two linking members **79**, **80** (see also FIG. **7***c*).

[0069] In FIG. **7***b*, the piece of furniture **1** shown in FIG. **7***a* is illustrated in the nonloaded position I in a side view from the direction of an arrow IXb. This side view shows how the upper part **6***b* is guided on the middle part **5***b* via arms **31***b* and **32***b*. The upper part **6***a* is also guided correspondingly on the middle part **5***a* via arms **31***a* and **32***ab* (see FIG. **7***a*).

[0070] FIG. **7***c* illustrates the piece of furniture **1** without the cloth covering and without the height adjustment device and the base, once again in the nonloaded position I. It can be seen in this view that the upper parts **6***a*, **6***b* of the piece of furniture **1** are not connected to one another directly. In the exemplary embodiment illustrated, the carriers **77**, **78**, too, are connected to one-another only by means of the cloth covering, not illustrated. According to design variants indicated by broken lines, the upper parts **6***a*, **6***b* and/or the carriers **77**, **78'** are connected by means of at least one flexible or rigid crossmember **81** or **82**. Alternatively or additionally to this, there is also provision for connecting the upper part **6***a* and the carrier **78** and/or the upper part **6***b* and the carrier **79** via at least one diagonal crossmember. The upper legs **77***a* and **78***a* of the two carriers **77** and **78** are supported in each case with projections **22***a* and **22***b* on spring elements **20***a*, **20***b* of the two spring mechanisms SM, the spring elements **20***a*, **20***b* being designed as leaf springs **21***a* and **21***b*.

[0071] FIG. **7***d* illustrates a sectional view, from a direction IXd shown in FIG. **7***a*, of the movement converter **41***a* formed between the middle part **5***a* and the upper part **6***a*, the piece of furniture **1** also standing in the nonloaded position I here. The middle part **5** is carried by the carrying arm **76***a* belonging to the lower part **4** and is screwed to said carrying arm via screws **83***a*, **83***b*. The upper part **6***a* is articulated movably upward and downward on the middle part **5***a* via the parallel arms **31***a*, **32***a* which are mounted rotatably with axes of rotation **33** to **36** on the upper part **6***a* and the middle part **5***a* respectively. The seat **7** is articulated rotatably on the upper part **6***a* via two axes of rotation **16** and **84**. The seat **7** is articulated at the axis of rotation **16** via the upper leg **77***a* of the carrier **77** and at the axis of rotation **84** via the lower leg **77***b* of the carrier **77**. Furthermore, the first spring element **20***a* is tension-mounted with a tension end **24***a* into the upper part **6***a*. The upper leg **77***a* of the right carrier **77** of the seat **7** bears with the projection **22***a* against a free end **23***a* of the leaf spring **21***a*. The seat **7** or the right carrier **77** is thereby supported on the first spring element **20***a* in a direction of rotation w. The leaf spring **21***a* is not only tension-mounted into the upper part **6***a*, but is supported in a middle region **85** against the upper part **6***a* by a support **25***a* when a person sitting on the seat reclines. In the nonloaded position I shown in FIG. **7***d*, there is an interspace **95** between the support **25***a* and the leaf spring **21***a*, and therefore these two components have no operative connection, so as not to brake a displacement of the support **25***a* taking place during a loading of the seat **7**. This interspace **95** is achieved by means of a corresponding prestress or orientation and/or a corresponding shaping of the leaf spring **21***a*. The leaf spring **21***a* and the support **25***a* form a spring mechanism SM. The support **25***a* is arranged on a toothed slide **86** which is guided laterally displaceably in a guide **28***a* on the upper part **6***a* and forms an output body **86***a*. The toothed slide **86**, or linear/curvilinear rack or gear, cooperates with a toothed quadrant **87**, or rotary gear, which is fastened to the upper part **6***a* rotatably about an axis of rotation **88** and forms a drive body **87***a*. The toothed quadrant **87** has a slotted guide which is designed as a long hole **89**. A pin **90** which is fastened to the middle part **5***a* engages into the long hole **89**. The upper part **6***a* is guided on the arms **31***a*, **32***a* against a downwardly directed movement and is supported via a second spring element **37***a*. The second spring element **37***a* is designed as a leaf spring **91***a* and is held with a tension end **92***a* in the middle part **5***a*. The upper part **6***a* acts with a bolt **93***a* on a free end **94***a* of the leaf spring **91***a*. The leaf spring **91***a* and the arms **31***a*, **32***a* together form a weighing mechanism WM. A mechanical interlinking of the weighing mechanism WM and of the spring mechanism SM takes place by means of the movement converter **41***a*. When the seat **7** is loaded with a weight force, the upper part **6***a*, on which the seat **7** is supported, is supported on the second spring element **37***a* and in this case is lowered slightly with respect to the position I shown in FIG. **7***d*. Along with the upper part **6***a*, the toothed quadrant **87** is also moved downward, and the pin **90** fastened rigidly to the middle part **5***a* with respect to the upper part **6***a* causes a rotation of the toothed quadrant **87** about its axis of rotation **88** in the direction of rotation w. The rotating

toothed quadrant **87**, during its rotational movement, takes up, or meshes with, the toothed slide **86** and the support **25***a* fastened to the latter and transports or translates this support to the left in the direction of the free end **23***a* of the leaf spring **21**. A spacing F**1** between the support **25***a* and the projection **22***a* is thereby reduced (see FIG. **7***d*). This reduced spacing between the support **25***a* and the projection **22***a* then causes a greater supporting of the seat **7** against an inclination movement of the seat **7** about the axes of rotation **16**, as compared with the position shown in FIG. **7***d*, when the person sitting on the seat **7** reclines (see also FIG. **7***f*). A left movement converter **41***b* (see FIG. **7***c*) is designed similarly to the right movement converter **41***a* described above in detail. The piece of furniture **1** thus has a seat **7** which has two weighing mechanisms WM and two spring mechanisms SM which are connected in each case by means of a movement converter **41***a*, **41***b*. As a function of the position of a person sitting on the seat **7** of the piece of furniture **1**, these two components are loaded proportionately with a weight force of the person and have corresponding reaction forces of the spring mechanisms SM against an inclination movement of the seat **7** directed in the direction of rotation w.

[0072] FIG. **7***e* again depicts, in an enlarged illustration, the right movement converter **41***a* shown in FIG. **7***d*, with the associated weighing mechanism WM and the associated spring mechanism SM, in the nonloaded position I. An illustration of the seat **7** and of the lower part **4** has been dispensed with here. Reference is made to the description relating to FIG. **7***d*.

[0073] FIG. **7***f* then shows a position II in which the seat **7**, not illustrated, is loaded with a weight force of a person sitting upright. In comparison with FIG. **7***e*, the rack **86** together with the support **25***a* of the spring mechanism SM has been displaced in the direction of the free end **23***a* of the leaf spring **21***a*. This displacement movement over the displacement distance V**1** is the result of a weighing movement of the upper part **6***a* over a weighing distance W**1**, where, for example, W**1**=2.5×V**1**. A step-up of the weighing movement generated by the weighing mechanism WM thus takes place in the movement converter **41***a*. That is to say, even with a small weighing movement, a sensitive setting of the spring mechanism SM can be carried out on account of the step-up. The setting of the spring mechanism SM and consequently the counterforce against an inclination movement of the seat about the axis of rotation **16** are generated as a function of the weight force with which a person acts on the seat. The counterforce is set by the variation in the spacing between the support **25***a* and the projection, acting on the leaf spring **21***a*, of the seat **7**. In the loading situation illustrated in FIG. **7***f*, too, there is still an interspace **96** between the support **25***a* and the leaf spring **21***a*, as long as the person sitting on the seat does not recline.

[0074] FIGS. **8***a* to **8***c* show once again in detail the weighing and inclination on a further structural unit consisting of the weighing mechanism WM, movement converter **41***a* and spring mechanism SM, the structural unit being modified slightly, as compared with FIGS. **7***a* to **7***f*. FIG. **8***a* shows a support **25***a* in a nonloaded position I of the piece of furniture. The seat, not illustrated, is supported via a projection **22***a*, symbolized by a triangle, on a first spring element **20***a* which is designed as a leaf spring **21***a* and which is tension-mounted on an upper part **6***b* between a lower counterbearing UG and an upper counterbearing OG. In the nonloaded position I illustrated, there is no operative connection between the support **25***a* and the leaf spring **21***a*. Instead, to avoid friction, a first interspace **95** having a thickness D**95** is formed between the support **25***a* and the leaf spring **21**. As soon as the seat part of the seat, not illustrated, is loaded by a person sitting down in an approximately upright sitting position, the support **25***a* moves under the leaf spring **21***a* into a position II shown in FIG. **8***b*. During this movement of the support **25***a*, there is no operative connection to the leaf spring **21***a*. As long as the person does not recline out of the upright sitting position, an interspace **96** having a thickness D**96** is still maintained between the support **25***a* and the leaf spring **21***a*, although, under certain circumstances, the weight force of the person already acts in a small fraction on the leaf spring **21***a* via the projection **22***a*. Thus, while the person is sitting down and as long as the person remains seated in the upright sitting position, a very smooth and therefore rapid follow-up of the support **25***a* under the leaf spring **21***a* is still possible, since an interspace **95** is constantly present. This is advantageous, for example, when the person sitting upright subsequently increases his weight by grasping a heavy file and reclines with this. Owing to the rapid and smooth adjustability of the support **25***a*, the weight of the heavy file is detected for the counterforce to be generated, even before the person reclines. Supporting which is too soft can thereby be avoided. An operative connection or contact between the support **25***a* and the leaf spring **21***a* occurs only when the person reclines out of his upright sitting position, since weight-dependent supporting is required only for reclining. The increased and weight-dependent counterforce is generated, after a slight compression of the leaf spring **21***a* over a spring travel W**96** (see FIG. **8***b*) corresponding to the thickness D**96** of the second interspace **96**, by the leaf spring **21***a* coming to lie on the support **25** (see FIG. **8***c*). The leaf spring **21***a* engages the support **25***a* under itself with a engaging force LF and thus prevents a displacement of the support **25***a* until the person resumes an upright sitting position according to FIG. **1***f* or stands up. The contact thus occurring or operative connection thus occurring between the leaf spring **21***a* and the support **25***a* leads to an increase in the spring force which acts counter to the seat at the projection **22***a* of the latter. The support **25***a* then forms a second lower counterbearing UG**2**, the two lower counterbearings UG and UG**2** having a spacing L**2** with respect to one another (see FIG. **8***a*). This spacing L**2** varies in proportion to the weight force of a person sitting on the piece of furniture. In position I, the lower counterbearing UG and the second lower counterbearing UG**2** have a smaller spacing L**1** with respect to one another.

[0075] FIG. **9***a* illustrates a further design variant of a piece of furniture **1** according to the invention. The piece of furniture **1** is designed as a piece of furniture **2** for sitting on or as a chair **3** and comprises a seat **7** which is arranged on a base C. The chair **3** is shown in a nonloaded position I. The base C comprises a lower part **4**, a middle part **5** and an upper part **6**. The middle part **5** is formed essentially by a housing **200** which is designed as a quiver **201** and is plugged in a bore **202** of the lower part **4**. The upper part **6** comprises a carrier **203** for the seat **7** and is connected to the middle part **5** by means of a height adjustment device **12**. The height adjustment device **12** comprises a settable spring AS designed as a pneumatic spring **204**, an axial bearing **208** and a spring element designed as a helical spring **38**. A pressure tube **205** of the pneumatic spring **204** is fastened in a known way in a bore **206** of the carrier **203**. In addition to the pressure tube **205**, the pneumatic spring **204** comprises a piston rod **207** which is

guided in the pressure tube **205**. The axial bearing **208** comprises an upper disk-shaped ring **209** and a lower pot-shaped ring **210** which has a collar **211**. The axial bearing **208** is fastened to a free end **207***a* of the piston rod **207**. The pneumatic spring **204** is supported via the collar **211** of the axial bearing **208** on a bottom **212** of the middle part **5** via the helical spring **38**. Above the helical spring **38**, the pneumatic spring **204** is guided slidably with its pressure tube **205** on the lower part **5**. A weighing mechanism WM is thus formed between the middle part **5** and the upper part **6** by the height adjustment device **12**. A movement converter **41** comprises a Bowden cable **213** and a lever mechanism LM designed as a lever **214**. The Bowden cable **213** consists of a wire **215** and of a hose **216** in which the wire **215** is guided. The lever **214** is fastened to the upper part **6** or the carrier **203** rotatably about an axis of rotation **217**. The lever **214** has a lower free end **214***a* and an upper free end **214***b*. On the upper free end **214***b* is formed a long hole **218** in which a support **25** is guided. The support **25** is movable on a sliding surface **219** of the carrier **203** under a spring element **20** designed as a leaf spring **21** in the direction of an arrow x', the traveling movement being generated by a rotation of the lever **214** about its axis of rotation **217**. The lower end **214***a* of the lever **214** is connected to the collar **211** of the lower ring **210** of the axial bearing **208** by means of the wire **215** of the Bowden cable **213**. The housing **200** which forms the middle part **5** and the carrier **203** form in each case a counterbearing **220**, **221** for the hose **216** in which the wire **215** is guided. During a loading of the seat **7**, the lowering of the upper part **6** counter to the helical spring **38** leads, independently of a height setting preselected by means of the pneumatic spring **204**, to a traveling movement of the support **25** in the direction of the arrow x'. The wire **215** of the Bowden cable **213** is drawn downward by the lower ring **210** of the axial bearing **208** in the direction of an arrow y'. The lower ring **210** of the axial bearing **208** forms a fastening device CD for the Bowden cable **213**. After a relief of the seat **7**, a spring **222** draws the lever **214** back again into the position shown in FIG. **9***a*. The leaf spring **21** and the support **25** form a spring mechanism SM. The distance over which the upper part **6** travels into the middle part **5** when the seat **7** is loaded by a person sitting down upright onto the seat **7** against the helical spring **38** is converted via the Bowden cable **213** and the lever **214** into a traveling movement of the support **25**. The support **25** is thereby displaced under the leaf spring **21** as a function of the weight of the person sitting upright on the seat **7**. The leaf spring **21** comes to lie on the support **25** only when the person sitting on the seat **7** reclines and generates an increased torque about a horizontal axis of rotation **16**, via which the seat **7** is connected pivotably to the upper part **6**. A torque which the person in the upright sitting position generates about the axis of rotation **16** is absorbed via a prestress of the leaf spring **21**. This prevents the situation where the leaf spring **21** comes to lie on the support **25** before the latter has reached a position appropriate to the person's weight. An operating element A, which is connected to the Bowden cable **213** instead of the lower ring **210**, is also illustrated as a design variant in FIG. **9***a* by broken lines. The operating element A allows a manual setting of the body weight of a person sitting on the piece of furniture **1**. The operating element can be operated with minimal effort by a person sitting upright or bent forward on the piece of furniture **1**.

[0076] FIG. **9***b* illustrates a view of a detail of the chair **3** shown in FIG. **9***a*. The view of a detail shows a design variant in which the seat **7** and the upper part **6** are connected by means of a toggle lever **223**. The toggle lever **223** serves for absorbing the torque M which the person sitting in an upright sitting position on the seat **7** generates about the axis of rotation **16**. The above-described prestress of the leaf spring **21** may thereby be largely dispensed with. The toggle lever **223** comprises an upper lever **224**, which is articulated rotatably on the seat **7**, and a lower lever **225**, which is articulated rotatably on the upper part **6**. The upper lever **224** and the lower lever **225** are connected to one another by means of a joint **226**. The joint **226** forms an axis of rotation **227**. A spring element **228**, which is designed as a spring **228***a*, is connected to the joint **226** and draws the lower lever **224** of the toggle lever **223** against an abutment **229** which is fastened to the carrier **203**. The toggle lever **223** is thereby brought into an approximately extended position. The abutment **229** is designed such that the levers **224** and **225** form with one another an angle α of about 175°. The toggle lever **223** consequently buckles only when the person reclines and therefore generates an increased torque about the axis of rotation **16**. Owing to the choice of the angle α, at which the levers **224** and **225** stand in relation to one another, and/or to the choice of the spring force of the spring element **228** and/or to the arrangement of the toggle lever **223** between the seat **7** and the upper part **6**, it is possible to adapt a blocking mechanism **230** to the special geometry of the chair **3**. When the toggle lever **223** buckles as a result of loading, the leaf spring **21** assumes the support or supporting of the seat **7**. At the point in time when the toggle lever **223** buckles in the direction of an arrow x, the support **25** has already been displaced in the direction of the arrow x' by the person according to the loading of the seat **7**.

[0077] FIG. **9***c* illustrates once again the view, known from FIG. **9***b*, of a detail of the chair **3** shown in FIG. **9***a*. In contrast to FIG. **9***b*, the seat **7** is articulated on the upper part **6** via two additional levers **230** and **231**. By means of the lever **231**, a projection **22** with which the seat **7** lies on the leaf spring **21** is forced onto a circular path **233** predetermined by the lever **231**.

[0078] FIGS. **10***a*-**10***d* illustrate a design variant of the seat shown in FIGS. **7***a* to **7***d*, in which a weighing mechanism WM and a movement converter **41** are designed similarly to the chair shown in FIG. **9***a*.

[0079] FIG. **10***a* shows a side view of a chair **3**. The chair **3** comprises a base C and a seat **7**. The base C comprises a lower part **4**, which receives a middle part **5** in a bore **202**, and an upper part **6**, which is connected to the middle part **5** via a weighing mechanism WM designed as a height adjustment device **12**. In the side view illustrated, a carrier **77** can be seen, which is articulated on the upper part **6** with an upper leg **77***a* rotatably about an axis of rotation **16** and rotatably with a lower leg **77***b* about an axis of rotation **84**. The chair **3** also has a second carrier which is concealed by the first carrier **77** in the illustration of FIG. **10***a*. As regards the arrangement of the second carrier, reference is made to FIG. **7***c* which shows a chair with a comparable construction. The seat **7** is formed essentially by the two carriers **77** and a body support member, configured in one embodiment as a cloth covering B, which bridges and connects the carriers **77**.

[0080] The two legs **77***a* and **77***b* are connected to one another via a plurality of linking members **79**. The two carriers **77** of the seat **7** are supported on the upper part **6** in each case via a spring mechanism SM. The seat **7** is rotatable together with the upper part **6** about a vertical axis of rotation

39 with respect to the middle part **5** and to the lower part **4**. The weighing mechanism WM comprises a settable spring AS which is designed as a pneumatic spring **204**. The upper part **6** comprises a carrier **76** which is composed of two mirror-symmetrically designed carrying arms **76***a*, only one of the carrying arms **76***a* being visible in the illustration of FIG. **10***a*. As regards the basic design, reference is made once again to FIG. **7***c* which shows a chair in which the carrying arm is of comparable design. Of the movement converter **41**, three Bowden cables **234***a*, **234***b* and **234***c* can be seen in FIG. **10***a*. Furthermore, the movement converter **41** comprises a coupling **235**, by means of which the Bowden cables **234***a*, **234***b* and **234***c* are decoupled from a rotation of the upper part **6** with respect to the middle part **5**. The coupling **235** is designed as a rotor system RS.

[0081] FIG. **10***b* shows an enlarged and slightly perspective illustration of the chair **3** shown in FIG. **10***a*, in the region of the carrying arm **76***a* of the upper part **6**. The carrying arm **76***a* consists of an upper leg **236** and of a lower leg **237**. The two legs **236**, **237** are connected rigidly to one another. The carrying arm **76***a* is fastened with a free end **238** of the lower leg **237** to a pressure tube **205** of the pneumatic spring **204**. Tension-mounted as a spring element **20** in the upper leg **236** of the carrier **76***a* is a leaf spring **21** on which the lower leg **77***b* of the carrier **77** is supported with an adaptor **239**.

[0082] FIG. **10***c* shows a perspective view of the adaptor **239** of the lower leg **77***b*, the middle part **5** and all the components lying between these. For the sake of clarity, once again, of the upper part **6** with the carrying arm **76***a*, only one of the carrying arms is illustrated. When the upper part **6** is loaded via the seat, not illustrated, the upper part **6**, together with the pneumatic spring **204**, is compressed with respect to the middle part **5**. The rotor system RS comprises a lower ring **242**, an upper ring **243** and an inner ring **243***a*. These are arranged on the pressure tube **205** of the pneumatic spring **204**. The lower ring **242** is mounted on the pressure tube **205** rotatably about the longitudinal axis **39** of the latter and forms a counterbearing **244** for the hoses **241***a* and **241***b* of the Bowden cables **234***a* and **234***b*. The middle part **5** is designed as a housing **200** and forms a further counterbearing **246** for the hoses **241***a* and **241***b* of the Bowden cables **234***a* and **234***b*. The upper ring **243** is mounted on the pressure tube **205** rotatably about the longitudinal axis **39** of the latter and vertically displaceably in the direction of the longitudinal axis **39** or in the directions of the arrows y' and y. The wires **240***a* and **240***b* of the lower Bowden cables **234***a* and **234***b* are fastened to the upper ring **243**. The inner ring **243***a* is mounted in the upper ring **234** and is freely rotatable about the axis of rotation **39** with respect to the upper ring **234** and with respect to the pressure tube **205**. A wire **240***c* of the upper Bowden cable **241***c* is fastened to the inner ring **243***a*. In a comparable way, a wire of a further upper Bowden cable, not illustrated, is fastened in a slit **234***b* of a tab **243***c* belonging to the inner ring **243***a*. This further upper Bowden cable, not illustrated, is connected to the second spring mechanism which is arranged on the second carrier, not illustrated. The movement converter **41** thus connects the weighing mechanism WM to two spring mechanisms SM, each of the two spring mechanisms SM assuming half the supporting of an inclination movement of the seat **7** about the axis of rotation **16**. The hose **241***c* of the upper Bowden cable **234***c* is supported on the lower leg **237** in the carrier arm **76***a*. During a rotation of the seat or of the upper part **6** in a direction of rotation v or v' about the axis of rotation **39**, the upper Bowden cables **234***c* rotate together with the pneumatic spring **204** and with the inner ring **243***a* fastened to the pressure tube **205**. Due to the lower Bowden cables **234***a* and **234***b* connected to the stationary middle part **5**, the rings **242** and **243** are held in their position shown in FIG. **10***c*. During a loading of the seat or of the upper part **6**, the wires **240***a* and **240***b* are drawn downward in the direction of an arrow y'. These then draw the upper ring **243** onto the lower ring **242**. The upper ring **243** takes up the inner ring **234***a* in the direction of the arrow y'. The wire **240***c* of the Bowden cable **234***c*, which connects the inner ring **243***a* and a first lever **248** of a toggle lever **249**, thereby draws the first lever **248** in the direction of a lug **247** counter to the force of a spring **222**. The lever **248** is mounted on the upper part rotatably about the axis of rotation **16** of the seat. A second lever **250** of the toggle lever **249** is connected to a support **25** rotatably about an axis of rotation **251**. The support **25** is fastened to the second lever **250** via a shaft **252** and is guided in the upper leg **236** of the upper part **6** beneath the leaf spring **21**. For this purpose, the upper leg **236** has a long hole **253**. The two levers **248** and **250** are connected to one another rotatably about an axis of rotation **255** by means of a pin **254**. During the loading of the seat, the support **25** is therefore displaced in the direction of an arrow x'. When the seat is relieved and the upper ring **243** is thereby released by the Bowden cables **234***a* and **234***b*, the spring **222** presses the first lever **248** of the toggle lever **249** back again into the position shown in FIG. **10***c*. During this rotational movement of the first lever **248** about the axis of rotation **16**, the support **25** is also drawn back in the direction of an arrow x. The upper ring **243** is simultaneously raised again via the wire **240***c* of the Bowden cable **241***c* into the position shown in FIG. **10***c*. It can be seen clearly in FIG. **10***c* how the upper leg **236** and the lower leg **237** of the carrying arm **76***a* are welded to one another by means of a triangular steel plate **256** so as to form a unit. Arranged mirror-symmetrically to a contact surface **257** of the carrying arm **76***a* is the abovementioned second carrying arm which carries the abovementioned second carrier. A bar **258**, only half of which is illustrated, connects the carrying arm **76***a* to the carrying arm not illustrated. The lower leg, not illustrated in FIG. **10***c*, of the carrier is articulated on the upper part **6** rotatably about the axis of rotation **84** by means of the adaptor **239** and is supported on the leaf spring **21** via a bolt **259**. Depending on the design of the seat or of the carriers, the bolt **259** may be installed in the adaptor **239** in four different positions **260***a* to **260***d*. As long as the seat is loaded by a person sitting upright, the support **25** is displaceably under the leaf spring **21**, without the support **25** touching the leaf spring **21**. This is achieved by means of a prestress of the leaf spring **21** which can be set via screws **261***a* and **261***b*.

[0083] FIG. **10***d*, then, shows the weighing mechanism WM and the movement converter **41** in a sectional view, a hatching of the parts shown in section having been dispensed with so as to keep the illustration clearer. The weighing mechanism WM comprises the pneumatic spring with a piston rod **207** guided in the pressure tube **205**, an axial bearing **208**, a cup **262** and a helical spring **38**. The cup **262** is supported with a collar **263** on the helical spring **38**, and the pneumatic spring **204** stands on the axial bearing **208** in the cup **262**, the piston rod **207** of the pneumatic spring **204** penetrating through a bottom **264** of the cup **262**, and the axial bearing **208** being fastened to a free end **265** of the piston rod **207**. The axial bearing **208** allows a free rotatability of the pneumatic spring **204** and of the upper part **6** fastened to the

latter, together with the seat, not illustrated, about the axis of rotation **39**. The pneumatic spring **204** is guided rotatably with its pressure tube **205**, above the helical spring **38**, in a housing **200** formed by the middle part **5**. The collar **263** of the cup **262** has two slits **265***a* and **265***b*, in which the wires **240***a* and **240***b* of the Bowden cables **234***a* and **234***b* are suspended.

[0084] The slits **265***a* and **265***b* in each case form a device CD for fastening the Bowden cables **234***a* and **234***b* of the movement converter **41**. By means of abutments **266***a* and **266***b*, the middle part **5** forms the counterbearing **246** for the hoses **241***a* and **241***b* of the Bowden cables **234***a* and **234***b*. A height adjustment of the pneumatic spring **204**, in which the piston rod **207** moves further in the pressure tube **205** in the direction of the arrow y or moves further out of the pressure tube **205** in the direction of the arrow y', is compensated by the S-shaped run of the Bowden cables **234***a* and **234***b* (see also FIG. **10***c*). During a loading of the seat by a person sitting down on the seat, the pneumatic spring **204** presses the cup **262** via the axial bearing **208** in the direction of the arrow y' counter to the helical spring **38** and at the same is lowered, together with the cup **262**, in the direction of the arrow y'. During this lowering movement, the cup **262** tightens the wires **240***a* and **240***b* of the Bowden cables **234***a* and **234***b*. The upper ring **243** is thereby drawn onto the lower ring **242** and the pull is transmitted to the Bowden cable **234***c* which is fastened to the inner ring **234***a*. The Bowden cable **234***c* then causes a displacement of the support **25** (see FIG. **10***c*). Since the rings **242** and **243** are mounted on the pressure tube **205** of the pneumatic spring **204** rotatably about the axis of rotation **39**, they can maintain their position with respect to the middle part **5**, even when the seat, the upper part **6** and the pneumatic spring **204** are multiply rotated about the vertical axis of rotation **39** on the axial bearing **208**. The rings **242** and **243** thus act as free-running rotors.

[0085] The invention is not restricted to exemplary embodiments illustrated or described. On the contrary, it embraces developments of the invention within the scope of the claims.

LIST OF REFERENCE SYMBOLS

[0086] **1** Body support structure, piece of furniture
[0087] **2** Piece of furniture for sitting on
[0088] **3** Chair
[0089] **4** Lower part
[0090] **5**, **5***a*, **5***b* Middle part
[0091] **6**, **6***a*, **6***b* Upper part
[0092] **7** Seat
[0093] **8** Foot as lower part
[0094] **9** Wall holder as lower part
[0095] **10** Ceiling holder as lower part
[0096] **11** Swing as lower part
[0097] **12** Height adjustment device
[0098] **13** Seat part of **7**
[0099] **14** Back part of **7**
[0100] **15** Axis of rotation between **13** and **14**
[0101] **16** Axis of rotation of **13** on **6**
[0102] **17** Arm on **7** or **14**
[0103] **18** Axis of rotation on **17** or **6**
[0104] **19** Axis of rotation on **17** or **6**
[0105] **20**, **20***a* First spring element
[0106] **21**, **21***a*, **21***b* Leaf spring as first spring element **20**
[0107] **22**, **22***a*, **22***b* Projection on **7** or **13**
[0108] **23**, **23***a* Free end of **20** or **21** or **21***a*
[0109] **24**, **24***a* Tension end of **20** or **21** or **21***a*
[0110] **25**, **25***a* Support
[0111] **26** Slide
[0112] **27** Roller
[0113] **28**, **28**A Guide on **6** or **6***a*
[0114] Lower end of **26**
[0115] **30** Inclined plane on **5**
[0116] **31** Arm between **5** and **6**
[0117] **31***a*, **31***b* Arm between **5***a* and **6***a* or **5***b* and **6***b*
[0118] **32** Arm between **5** and **6**
[0119] **32***a*, **32***b* Arm between **5***a* and **6***a* or **5***b* and **6***b*
[0120] **33**, **34** Axis of rotation of **31**, **31***a*, **31***b*
[0121] **34** to **36** Axis of rotation of **32**, **32***a*, **32***b*
[0122] **37**, **37***a* Second spring element
[0123] **38** Helical spring as second spring element
[0124] **39** Vertical axis of rotation
[0125] **40**, **40***a* First and second weight force
[0126] **41** Movement converter
[0127] **41**, **41***b* Right and left movement converter
[0128] **42** Circular path
[0129] **43** Drive
[0130] **44** Output
[0131] **45** Gear
[0132] **46** Path on **6**
[0133] **47** Shaft of **25**
[0134] **48** Long hole on **26**
[0135] **49** Tension spring
[0136] **50** Helical spring as first spring element **20**
[0137] **51** Lever on **6**
[0138] **52** Axis of rotation between **51** and **6**
[0139] **53** Engagement point of **20** on **51**
[0140] **54** Cam on **5**
[0141] **55** Roller on **6**
[0142] **56** Articulated lever on **5**
[0143] **56***a* Lower lever of **56**
[0144] **56***b* Upper lever of **56**
[0145] **57** Axis of rotation between **56***a* and **56***b*
[0146] **58** Axis of rotation between **25** and **56**
[0147] **59** Elastic element between **13** and **14**
[0148] **60** Bore in **5**
[0149] **61** Column on **6**
[0150] **62** Duct in **6**
[0151] **63** Boom of **6**
[0152] **64** Hydraulic fluid
[0153] **65** Reservoir in **5**
[0154] **66** Piston on **6**
[0155] **67** Piston surface of **61**
[0156] **68** Magnetorheological fluid
[0157] **69** Concertina for **68** in **65**
[0158] **70** Concertina for **68** in **62**
[0159] **71** Sensor on **5**
[0160] **72** Reception slit on **6** for **20**
[0161] **73** Bearing body on **21**
[0162] **74** Reception slit on **5** for **20**
[0163] **75** Bogie, base
[0164] **76** Carrier
[0165] **76***a*, **76***b* Carrying arm of **76**
[0166] **77** Right carrier of **7**
[0167] **77***a*, **77***b* Upper and lower leg of **77**
[0168] **78** Left carrier of **7**
[0169] **78***a*, **78***b* Upper and lower leg of **78**
[0170] **79** Spoke of **77**
[0171] **80** Spoke of **78**
[0172] **81** Crossmember between **6***a* and **6***b*
[0173] **82** Crossmember between **77** and **78**

[0174] **83***a*, **83***b* Screws between **5***a* and **76***a*
[0175] **84** Axis of rotation of **7** on **6***a*
[0176] **85** Middle region of **21***a*
[0177] **86** Toothed slide on **6***a*, output body
[0178] **86***a* Output body
[0179] **87** Toothed quadrant on **6***a*, drive body
[0180] **87***a* Drive body
[0181] **88** Axis of rotation of **87**
[0182] **89** Long hole in **87**
[0183] **90** Pin on **5***a*
[0184] **91***a* Leaf spring as second spring element
[0185] **92***a* Tension end of **91***a*
[0186] **93***a* Bolt on **6***a*
[0187] **94***a* Free end of **91***a*
[0188] **95**, **96**, **97** First, second, third interspace
[0189] **98** Spring
[0190] **99** Helical spring
[0191] **200** Housing
[0192] **201** Quiver
[0193] **202** Bore in **4**
[0194] **203** Carrier
[0195] **204** Pneumatic spring
[0196] **205** Pressure tube
[0197] **206** Bore in **203**
[0198] **207** Piston rod of **204**
[0199] **207***a* Free end of **207**
[0200] **208** Axial bearing
[0201] **209** Upper ring of **208**
[0202] **210** Lower ring of **208**
[0203] **211** Collar of **210**
[0204] **212** Bottom of **5**
[0205] **213** Bowden cable
[0206] **214** Lever
[0207] **214***a* Lower end of **214**
[0208] **214***b* Upper end of **214**
[0209] **215** Wire
[0210] **216** Hose
[0211] **217** Axis of rotation of **214**
[0212] **218** Long hole
[0213] **219** Sliding surface on **203**
[0214] **220** Counterbearing on **5**
[0215] **221** Counterbearing on **6**
[0216] **222** Spring between **214** and **203**
[0217] **223** Toggle lever
[0218] **224** Upper lever of **223**
[0219] **225** Lower lever of **223**
[0220] **226** Joint
[0221] **227** Axis of rotation
[0222] **228** Spring element
[0223] **228***a* Spring between **226** and **229**
[0224] **229** Abutment on **6** for **223**
[0225] **230** Blocking mechanism
[0226] **231** Lever between **6** and **7**
[0227] **232** Lever between **6** and **7**
[0228] **233** Toggle lever
[0229] **234***a* Bowden cable
[0230] **234***b* Bowden cable
[0231] **234***c* Bowden cable
[0232] **235** Coupling
[0233] **236** Upper leg of **76***a*
[0234] **237** Lower leg of **76***a*
[0235] **238** Free end of **237**
[0236] **239** Adaptor on **77***b*
[0237] **240***a* Wire of **234***a*
[0238] **240***b* Wire of **234***b*
[0239] **240***c* Wire of **234***c*
[0240] **241***a* Hose of **234***a*
[0241] **241***b* Hose of **234***b*
[0242] **241***c* Hose of **234***c*
[0243] **242** Lower ring
[0244] **243** Upper ring
[0245] **243***a* Inner ring
[0246] **243***b* Slit in **243***c*
[0247] **243***c* Tab of **243***a*
[0248] **244** Counterbearing formed by **242**
[0249] **245** Counterbearing formed by **243**
[0250] **246** Counterbearing formed by **200**
[0251] **247** Lug
[0252] **248** First lever of **249**
[0253] **249** Toggle lever
[0254] **250** Second lever of **249**
[0255] **251** Axis of rotation between **250** and **25**
[0256] **252** Shaft on **25**
[0257] **253** Long hole in **236**
[0258] **254** Pin
[0259] **255** Axis of rotation between **248** and **250**
[0260] **256** Steel plate between **236** and **237**
[0261] **257** Contact surface of **76***a*
[0262] **258** Bar
[0263] **259** Bolt on **239**
[0264] **260***a* **260***d* Position of **259** on **239**
[0265] **261***a* Screw on **6**
[0266] **261***b* Screw on **6**
[0267] **262** Cup in **5**
[0268] **263** Collar of **262**
[0269] **264** Bottom of **262**
[0270] **265***a* Slit in **263**
[0271] **265***b* Slit in **263**
[0272] **266***a* Abutment in **5**
[0273] **266***b* Abutment in **5**
[0274] I Position of rest or position of **1** (nonloaded)
[0275] II Working position or position of **1** (loaded)
[0276] III Working position or position of **1** (loaded)
[0277] A Operating element
[0278] A**2** Arm of BF**2**
[0279] AS Settable spring
[0280] B Cloth covering of **7**
[0281] BF Leaf spring
[0282] BF**2** Leaf spring
[0283] C Base or chassis
[0284] CD Device for fastening of **41**
[0285] DR Pressure roller on **6**
[0286] DN Pressure nose on **6**
[0287] D**95** Thickness of **95**
[0288] D**96** Thickness of **96**
[0289] F**1**, F**2** Spacing between **25** and **22** in I and II
[0290] GL Rubber bearing
[0291] HK Horizontal component of a weighing movement
[0292] K Curve on which **25** travels
[0293] KF Contact surface of **25**
[0294] LA Left arm of BF
[0295] LF Engaging force
[0296] LM Lever mechanism
[0297] L**1** Spacing between UG and UG**2** in I
[0298] L**2** Spacing between UG and UG**2** in II
[0299] M Torque about **16**
[0300] N Slot
[0301] N**1**, N**2**, N**3** Level of **6** in I and II and III

[0302] OG Upper counterbearing in **72**
[0303] P Person
[0304] P**1** Upright sitting posture
[0305] P**2** Reclined sitting posture
[0306] P**3** Sitting posture leaning forward
[0307] RA Right arm of BF
[0308] RS Rotor system
[0309] R**1** Reaction force of SM in I
[0310] R**2** Reaction force of SM in II
[0311] S**1**, S**2**, S**3** Position of **26** in I and II and III
[0312] SM Spring mechanism
[0313] UG Lower counterbearing in **72**
[0314] UG**2** Second lower counterbearing
[0315] V**1**, V**2** displacement distance
[0316] VK Vertical component of a weighing movement
[0317] W Wheel
[0318] WM Weighing mechanism
[0319] W**1**, W**2** Weighing distance
[0320] v, v' Direction of rotation about **39**
[0321] w Direction of rotation
[0322] α Angle between **224** and **225**

1. A body support structure (**1**) having a base (C), on which at least one seat (**7**) is articulated, the seat (**7**) comprising a seat part (**13**) and a back part (**14**), an inclination of the seat (**7**) about at least one axis of rotation (**16**) being supported by at least one spring mechanism (SM) acting between the seat (**7**) and the base (C), the spring mechanism (SM) comprising a lever arm (**51**) and a support (**25**), the support (**25**) being movable out of a position of rest (S**1**) into different working positions (S**2**, S**3**), the support (**25**) assuming the position of rest (S**1**) when the seat (**7**) is nonloaded, the support (**25**) assuming one of the working positions (S**2**, S**3**) as a function of a weight force (**40**, **40***a*) with which a person (P) sitting in an upright sitting posture (P**1**) loads the seat (**7**), the support (**25**) being movable freely of an engaging force (LF), which can be generated by the lever arm (**51**), between its position of rest (S**1**) and one of the working positions (S**2**, S**3**), as long as the person (P) is sitting on the seat (**7**) in the upright sitting posture (P**1**), the support (**25**) being engaged by the lever arm (**51**) by means of the engaging force (LF) when the person (P) reclines from his upright sitting posture (P**1**) against the back part (**14**) into a rearwardly inclined sitting posture (P**2**), a reaction force (R**2**) of the spring mechanism (SM) on the seat (**7**) being adaptable to the respective weight force (**40**, **40***a*) of the person (P) by means of the working position (S**2**, S**3**) of the support (**25**).

2. A body support structure according to claim **1**, characterized in that the lever arm (**51**) is designed as a spring element (**20**, **20***a*).

3. A body support structure according to claim **2**, characterized in that the lever arm (**51**) designed as a spring element (**20**, **20***a*) is designed as a leaf spring (**21**, **21***a*).

4. A body support structure according to claim **1**, characterized in that the support (**25**) is designed as a spring element (**20**, **20***a*).

5. A body support structure according to claim **4**, characterized in that the support (**25**) designed as a spring element (**20**, **20***a*) is designed as a helical spring (**50**).

6. A body support structure according to claim **1**, characterized in that a torque (M) which is generated about the axis of rotation (**16**) of the seat (**7**) by the person (P) sitting in the upright sitting posture (P**1**) on the seat (**7**) can be absorbed by means of a prestress of the spring element (**20**, **20***a*).

7-13. (canceled)

14. A body support structure according to claim **1**, characterized in that the base (C) comprises at least one lower part (**4**), one middle part (**5**, **5***a*, **5***b*) and one upper part (**6**, **6***a*, **6***b*), the seat (**7**) being articulated on the upper part (**6**, **6***a*, **6***b*), the upper part (**6**, **6***a*, **6***b*) being guided upward or downward on the middle part (**5**, **5***a*, **5***b*), the upper part (**6**, **6***a*, **6***b*) being supported on the middle part (**5**, **5***a*, **5***b*) by at least one weighing mechanism (WM), the upper part (**6**, **6***a*, **6***b*) moving with respect to the middle part (**5**, **5***a*, **5***b*), during a first loading of the seat (**7**) with the first weight force (**40**), out of a first position (I) into a second position (II), counter to a restoring force of the weighing mechanism (WM), with a first weighing movement over a first weighing distance (W**1**), the upper part (**6**, **6***a*, **6***b*) moving with respect to the middle part (**5**, **5***a*, **5***b*), during a second loading of the seat (**7**) with the second weight force (**40***a*), out of the first position (I) into a third position (III), counter to the restoring force of the weighing mechanism (WM), with a second weighing movement over a second weighing distance (W**2**), this weighing movement of the upper part (**6**, **6***a*, **6***b*) over the weighing distance (W**1**, W**2**) being convertible into a traveling movement of the support (**25**) of the spring mechanism (SM) by means of at least one movement converter (**41**, **41***a*, **41***b*).

15. A body support structure according to claim **14**, characterized in that the movement converter (**41**, **41***a*, **41***b*) is designed as a mechanical and/or electrical and/or electronic and/or pneumatic and/or hydraulic movement converter (**41**) between the weighing mechanism (WM) and the spring mechanism (SM).

16. (canceled)

17. A body support structure according to claim **14**, characterized in that the movement converter (**41**, **41***a*, **41***b*) comprises a drive (**43**) and an output (**44**), the output (**44**) being movable by means of the drive (**43**), and the support (**25**) being movable by means of the output (**44**).

18-28. (canceled)

29. A body support structure according to claim **14**, characterized in that a height adjustment device (**12**) is arranged between the lower part (**4**) and the middle part (**5**, **5***a*, **5***b*).

30. A body support structure according to claim **14**, characterized in that a height adjustment device (**12**) is arranged between the middle part (**5**, **5***a*, **5***b*) and the upper part (**6**, **6***a*, **6***b*).

31. A body support structure according to claim **29**, characterized in that the height adjustment device (**12**) is designed as a pneumatic spring (**204**) or oil-pressure spring.

32. A body support structure according to claim **14**, characterized in that the weighing mechanism (WM) comprises a spring element (**37**).

33. A body support structure according to claim **32**, characterized in that the spring element (**37**) of the weighing mechanism (WM) is designed as a leaf spring (**91***a*).

34. A body support structure according to claim **32**, characterized in that the spring element (**37**) of the weighing mechanism (WM) is designed as a helical spring (**38**).

35-40. (canceled)

41. A body support structure according to claim **14**, characterized in that the weighing mechanism (WM) is arranged centrically with respect to a vertically standing axis of rotation (**39**) of the body support structure (**1**).

42. (canceled)

43. A body support structure according to claim **1**, characterized in that the height adjustment device (**12**) comprises a settable spring (AS), an axial bearing (**208**) and the spring

element (**37**), the settable spring (AS) comprising a pressure tube (**205**) and a piston rod (**207**) movable in the latter.

44. A body support structure according to claim **43**, characterized in that the axial bearing (**208**) is arranged between the settable spring (AS) and the spring element (**37**).

45. (canceled)

46. A body support structure according to claim **43**, characterized in that the axial bearing (**208**) is fastened to a free end (**207***a*) of the piston rod (**207**) of the settable spring (AS).

47. A body support structure according to claim **43**, characterized in that the settable spring (AS) is designed as a pneumatic spring (**204**).

48. A body support structure according to claim **43**, characterized in that an adaptor (**262***a*) is arranged between the axial bearing and the spring element (**37**).

49. (canceled)

50. A body support structure according to claim **43**, characterized in that the weighing mechanism (WM) has at least one device (CD) for fastening at least one movement converter (**41**).

51-65. (canceled)

66. A body support structure, in particular a chair, the body support structure comprising a weighing mechanism (WM) which is formed by a height adjustment device, the height adjustment device comprising a settable spring (AS) with a pressure tube (**205**) and with a piston rod (**207**) movable in the pressure tube, an axial bearing (**208**) and a spring element (**37**, **37***a*), characterized in that the weighing mechanism (WM) has a device (CD) for fastening a movement converter (**41**).

67. A body support structure according to claim **66**, characterized in that the movement converter comprises a Bowden cable (**213**, **234***a*, **234***b*).

68. A body support structure according to claim **67**, characterized in that the Bowden cable (**213**, **234***a*, **234***b*) is connected to the weighing mechanism (WM).

69. A body support structure according to claim **66**, characterized in that the weighing mechanism (WM) is arranged in a housing (**200**).

70. A body support structure according to claim **69**, characterized in that the housing (**200**) forms a counterbearing (**220**) for a hose (**216**, **214***a*, **241***b*) of the Bowden cable (**213**, **234***a*, **234***b*).

71. A body support structure according to claim **66**, characterized in that the movement converter (**41**) comprises a coupling (**235**) which is arranged on the pressure tube (**205**) of the settable spring (AS).

72. A body support structure according to claim **1**, characterized in that the support (**25**) is movable out of a position of rest (S**1**) along a curve (K) or along a linear path into the different working positions (S**2**, S**3**).

73. A method of using a body support structure comprising:

providing a base, a seat rotatably supported on the base, and an adjustable spring mechanism disposed between the base and a lever arm supporting the seat;

positioning a user on the seat without reclining the seat relative to the base;

adjusting the spring mechanism in response to the weight of the user without engaging the lever arm with the spring mechanism;

reclining the seat relative to the base; and

engaging the lever arm with the spring mechanism as the seat reclines relative to the base.

74. The method of claim **73** wherein the lever arm comprises a leaf spring and the spring mechanism comprises a support member, wherein adjusting the spring mechanism in response to the weight of the user comprises moving the support member along a length of the leaf spring.

* * * * *