US005348372A

United States Patent [19]

Takamatsu et al.

[11] Patent Number: 5,348,372

[45] Date of Patent: Sep. 20, 1994

[54] TILTING CONTROL ASSEMBLY FOR CHAIR

[75] Inventors: **Shunichi Takamatsu; Hirozi Kubo; Katsunori Hama; Hiroshi Iwabuchi,** all of Osaka, Japan

[73] Assignee: **Itoki Crebio Corporation,** Osaka, Japan

[21] Appl. No.: **959,628**

[22] Filed: **Oct. 13, 1992**

[30] **Foreign Application Priority Data**

Oct. 22, 1991 [JP] Japan ..... 3-086141[U]
Jul. 28, 1992 [JP] Japan 4-201490

[51] **Int. Cl.**[5] **A47C 1/02**

[52] **U.S. Cl.** **297/306;** 297/304; 297/354.12

[58] **Field of Search** 297/300, 306, 304, 354.12, 297/285

[56] **References Cited**

U.S. PATENT DOCUMENTS

4,200,332	4/1980	Brauning	297/354.12
4,479,679	10/1984	Fries	297/300
4,494,795	1/1985	Roossien	297/354.12
4,938,531	7/1990	Fogarassy	292/300
4,962,962	10/1990	Machate	297/300
5,046,780	9/1991	Decker et al.	297/302
5,080,318	1/1992	Takamatsu et al. .	
5,160,184	11/1992	Faiks	297/304

FOREIGN PATENT DOCUMENTS

0131554	1/1985	European Pat. Off.	297/300
0205097	6/1986	European Pat. Off. .	
0435297	7/1991	European Pat. Off. .	
2647409	7/1977	Fed. Rep. of Germany .	
3741472	6/1989	Fed. Rep. of Germany .	

Primary Examiner—P. Austin Bradley
Assistant Examiner—James Miner
Attorney, Agent, or Firm—Michael D. Bednarek

[57] **ABSTRACT**

The present invention provides a tilting control assembly for a chair. The chair comprises a support device, a seat supported above the support device, and a seat back arranged behind the seat to tilt rearwardly. The tilting control assembly comprises a tilting control spring device for elastically supporting the seat back against rearward tilting thereof via a load applying member, a displacing mechanism responsive to a downward load applied to the seat for causing the load applying member to move relative to the spring device, and a lock device for preventing the load applying member from moving reversely relative to the spring device when the seat back is rearwardly tilted.

10 Claims, 27 Drawing Sheets

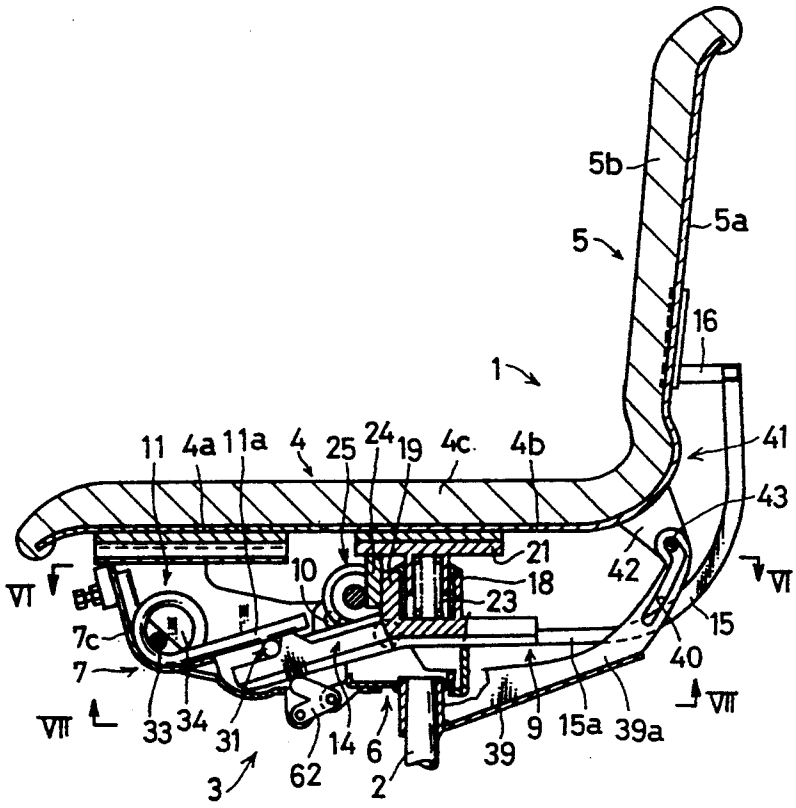

MillerKnoll, Ex. 1007

Fig. 1

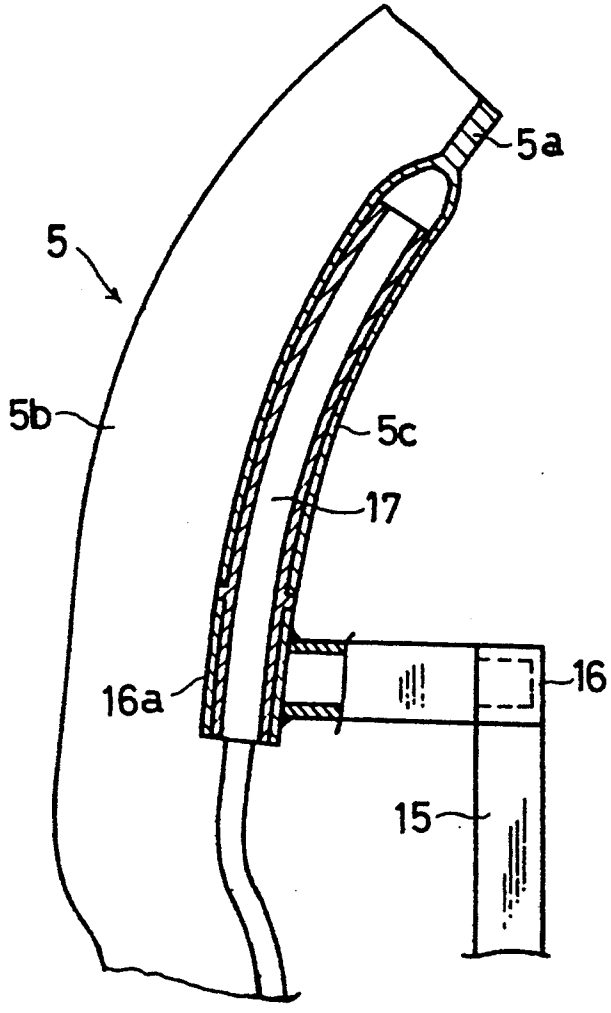
5a
5
5b
5c
17
16a
16
15

Fig. 2

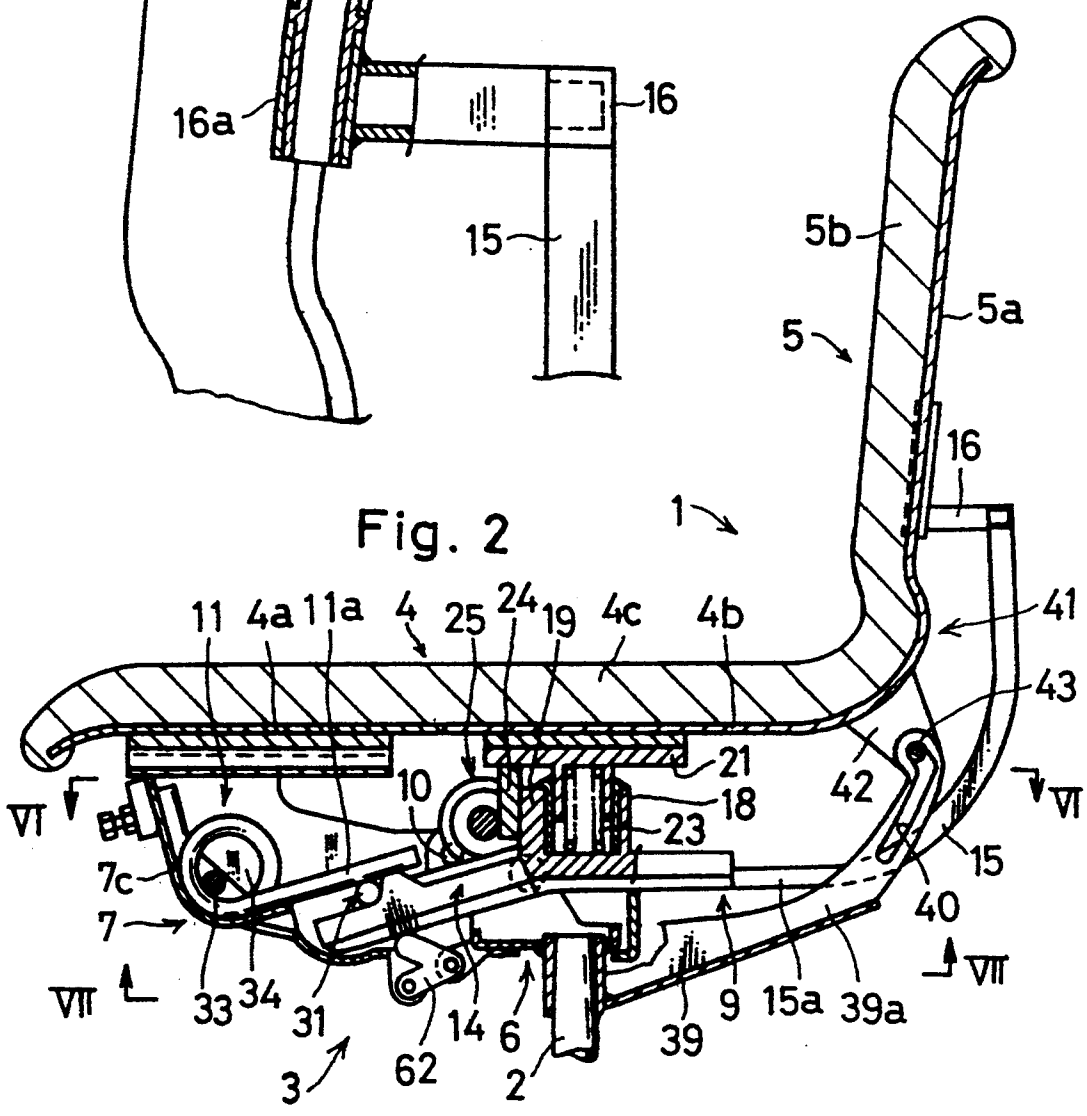
5b
5a
5
16
1
41
43
11
4a
11a
4
25
24
19
4c
4b
21
10
18
23
42
VI
VI
7c
7
15
40
VII
VII
33
34
31
62
14
6
2
3
39
9
15a
39a

Fig. 3

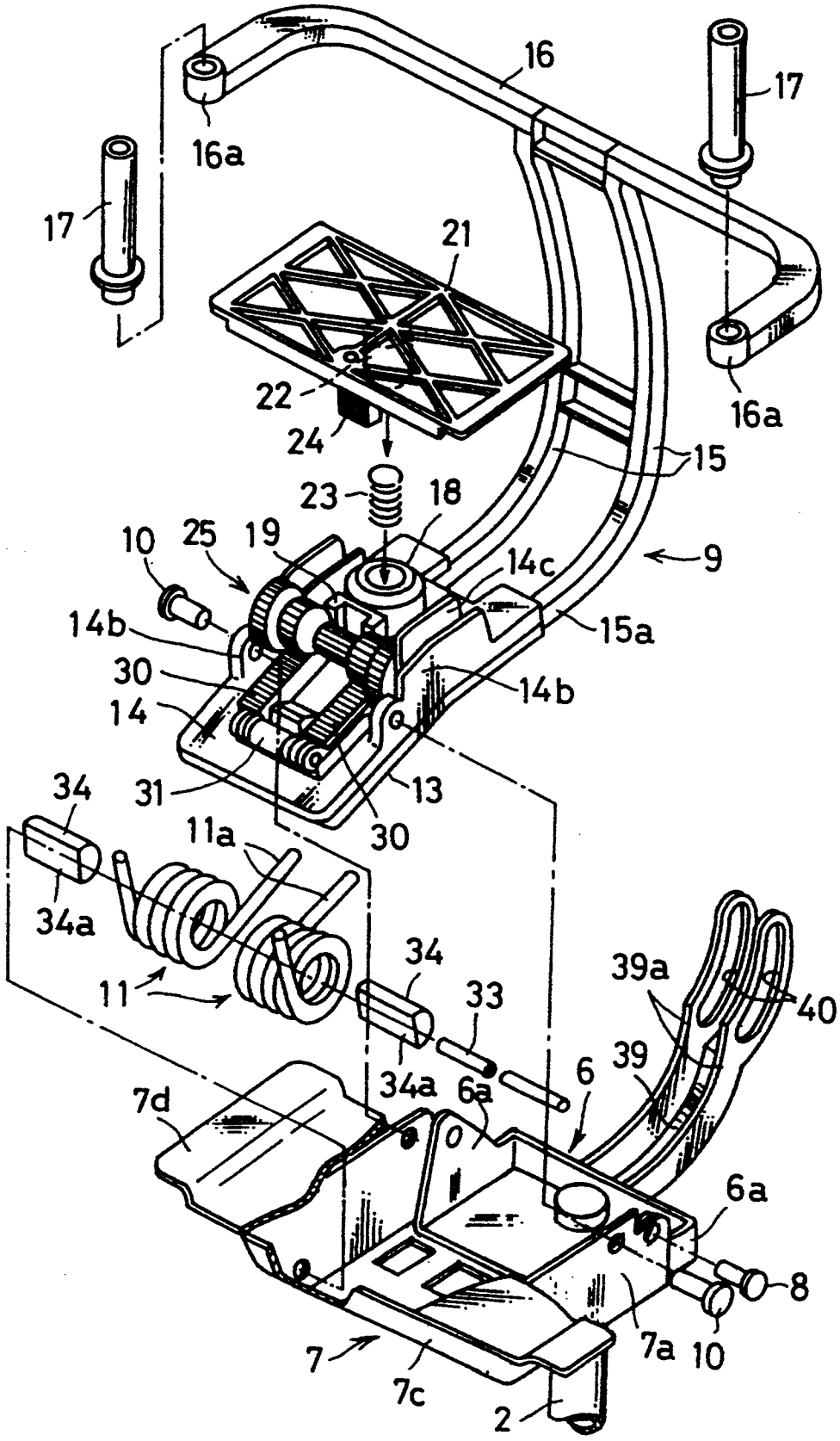
16
17
16a
17
21
22
24
16a
15
23
18
10
25
19
14c
9
14b
15a
30
14b
14
31
13
34
30
11a
34a
34
39a
11
33
40
39
34a
6a
6
7d
6a
8
7a
10
7
7c
2

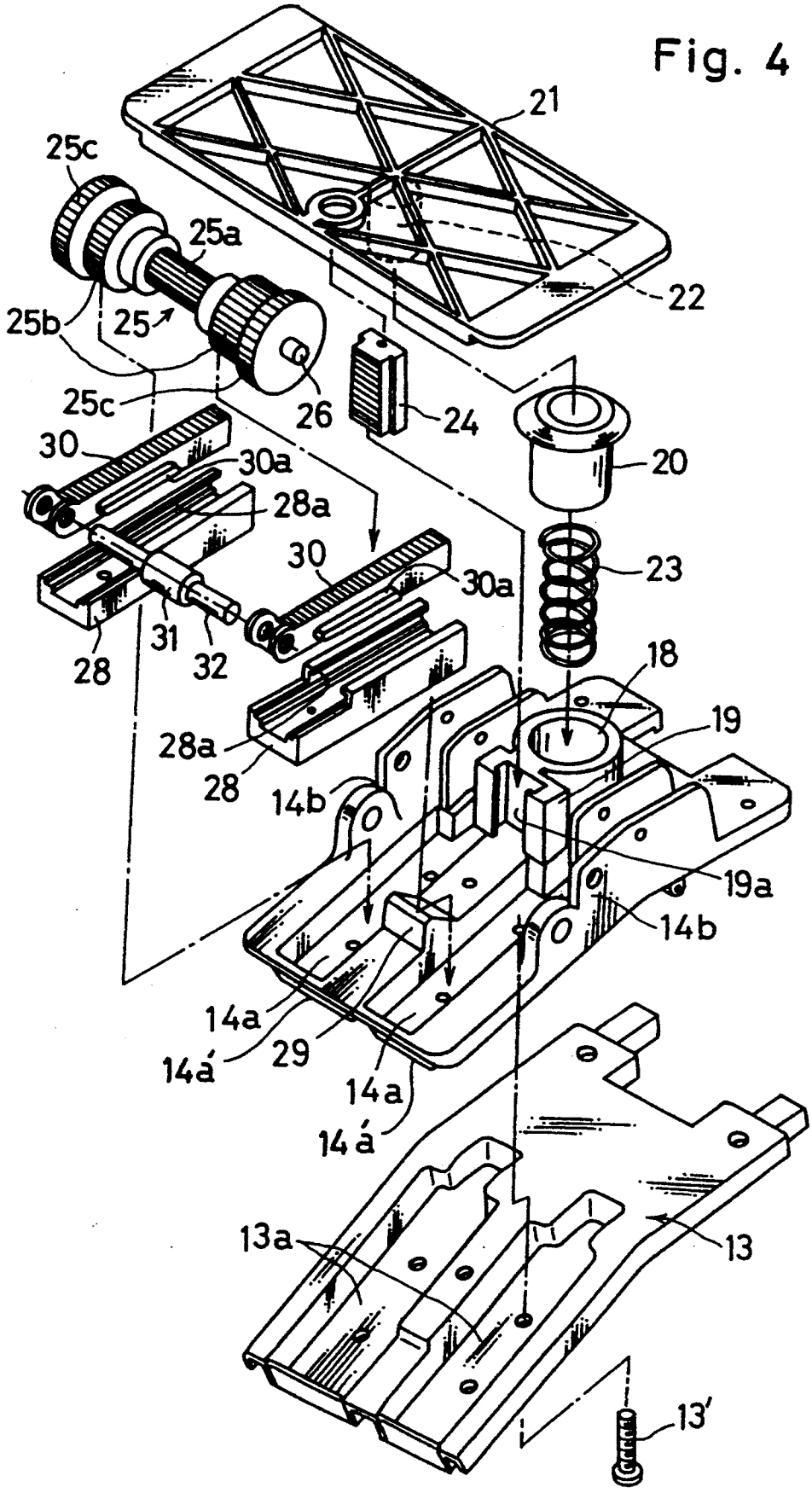
Fig. 4
21
22
25c
25a
25b
25
25c
26
24
20
30
30a
28a
30
30a
23
31
32
28
18
19
28a
28
14b
19a
14b
14a
29
14á
14a
14á
13a
13
13'

Fig. 5

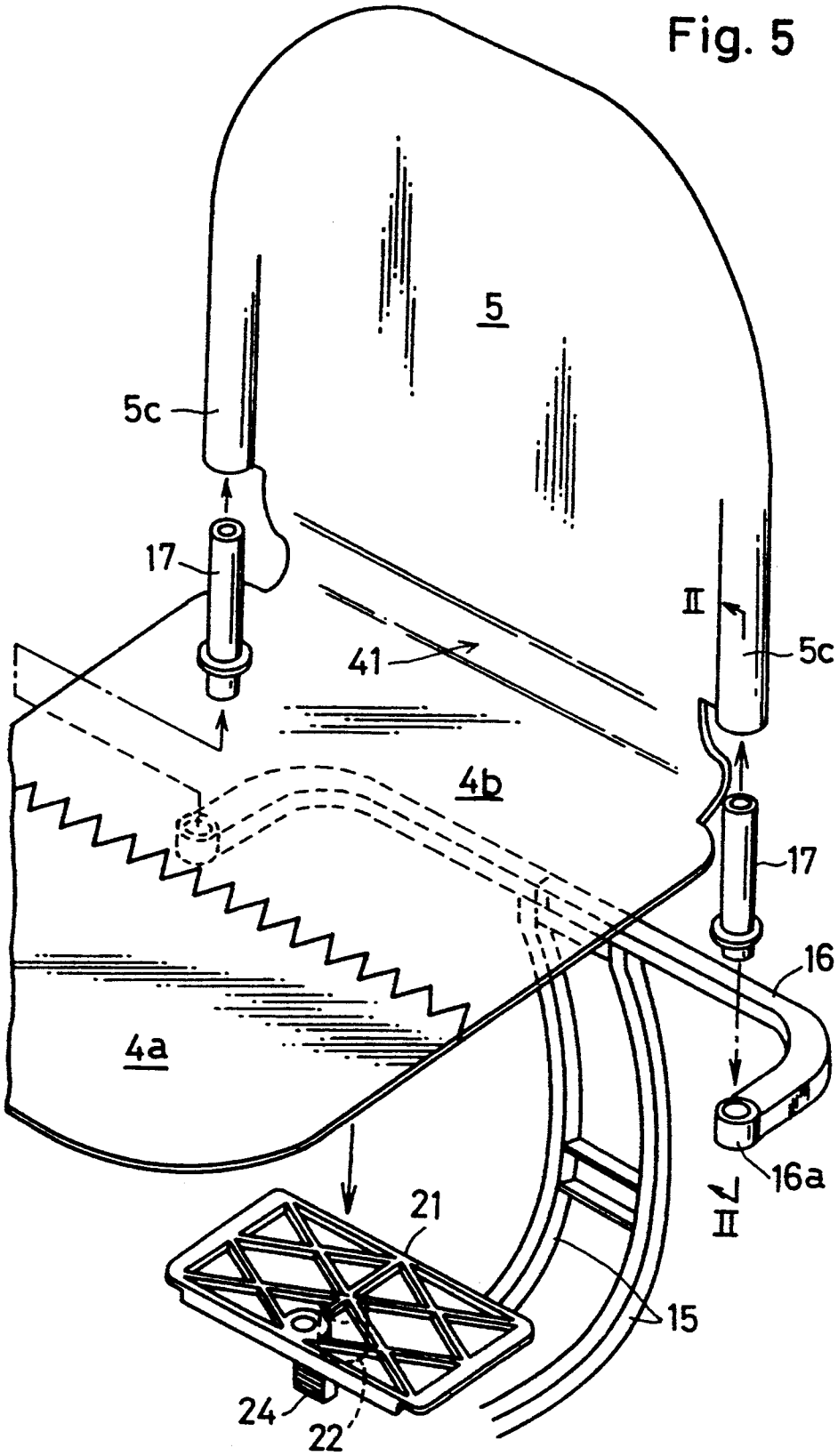

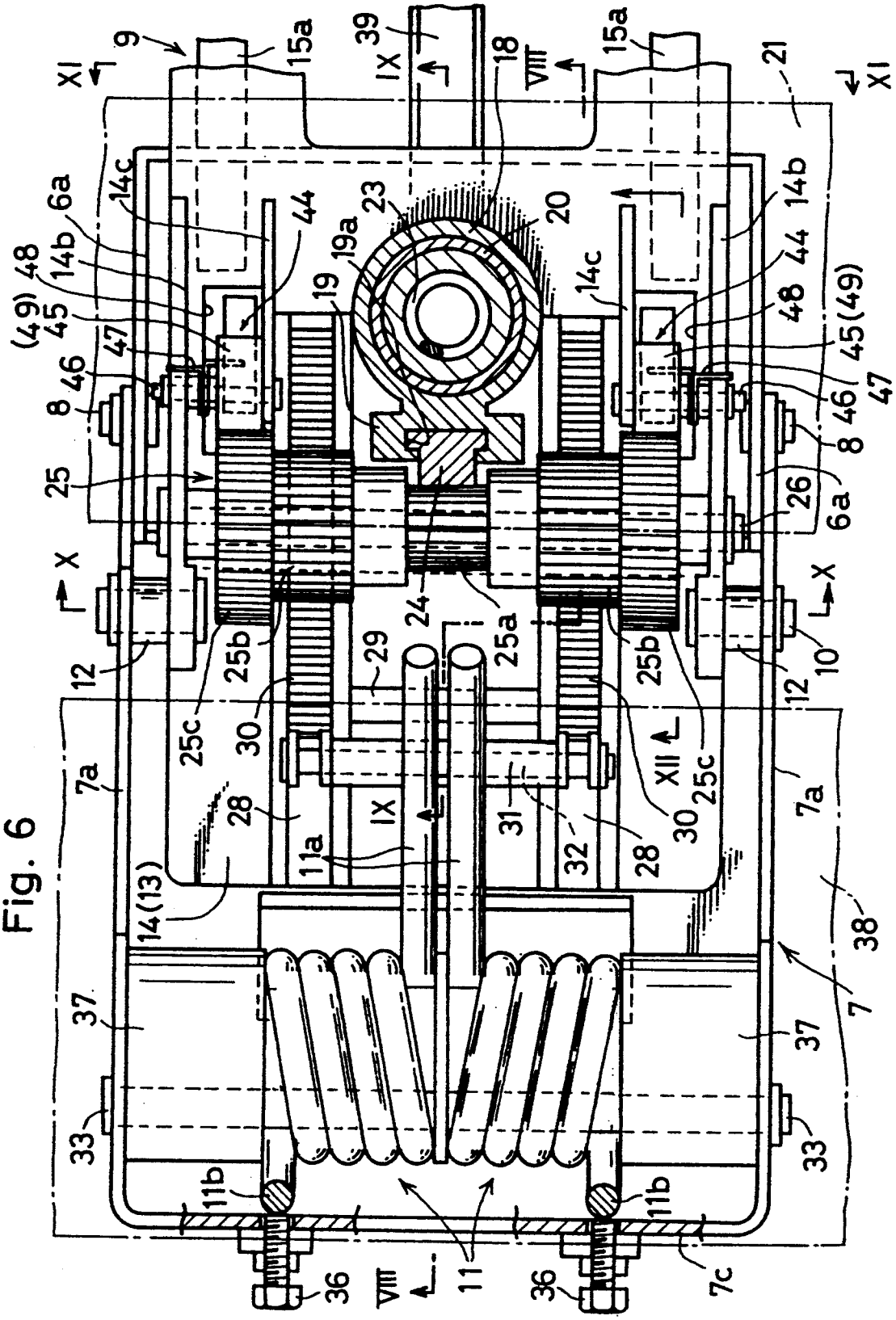
9
15a
39
IX
18
VIII
15a
21
XI
XI
6a
14c
44
23
20
14b
48
14b
19a
19
14c
44
(49)
45
48
45(49)
47
46
47
46
8
8
25
26
6a
X
X
24
25a
12
25b
29
25b
10
12
25c
30
XII
25c
7a
28
IX
31
30
7a
11a
32
28
14(13)
38
37
7
37
33
33
11b
11b
11
36
VIII
36
7c

Fig. 6

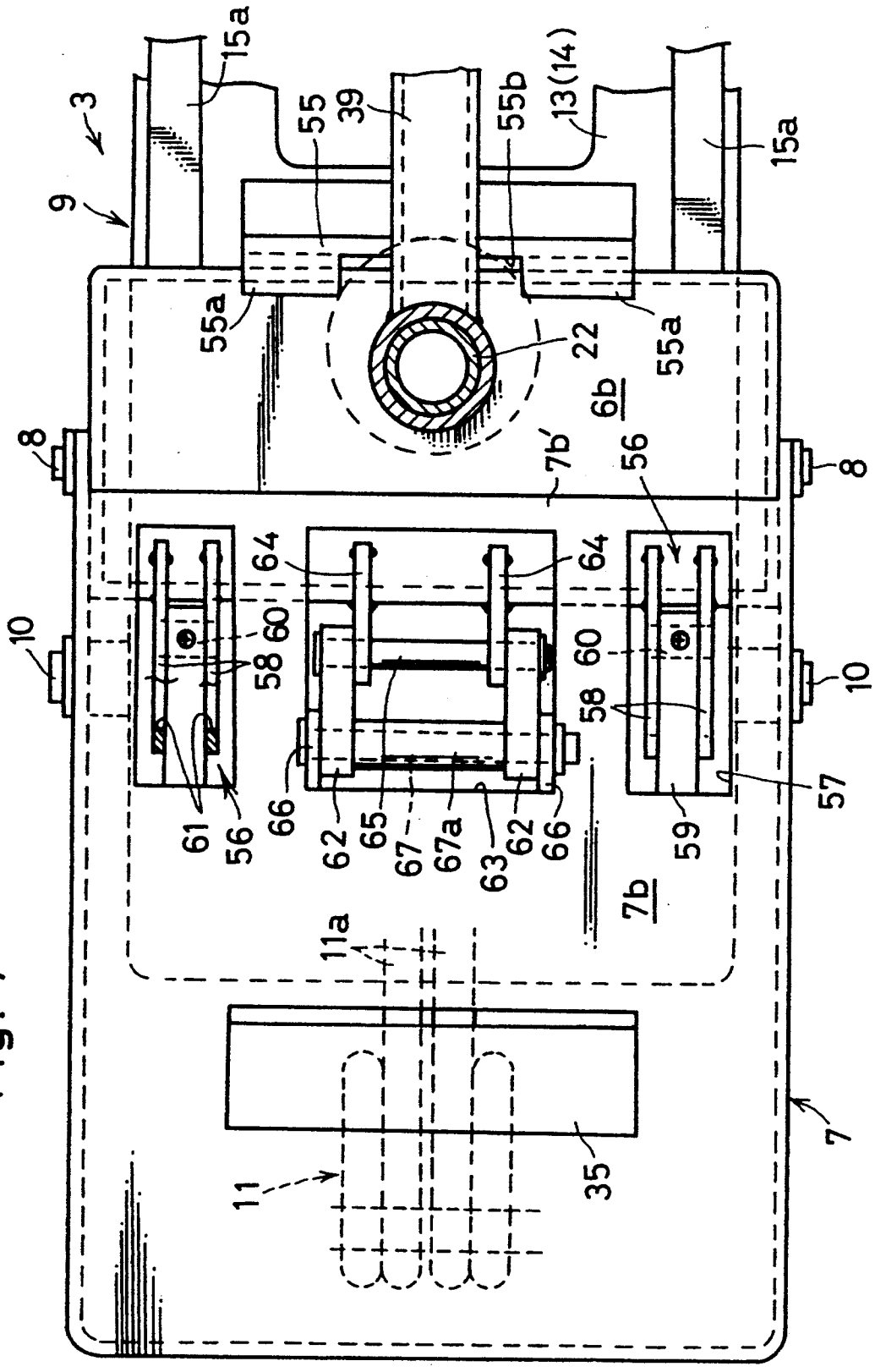
3
9
15a
55
39
55b
13(14)
15a
55a
22
55a
6b
7b'
56
8
8
64
64
10
60
58
60
58
10
61
56
66
62
65
67
67a
63
62
66
59
57
7b
11a
11
35
7

Fig. 7

Fig. 8

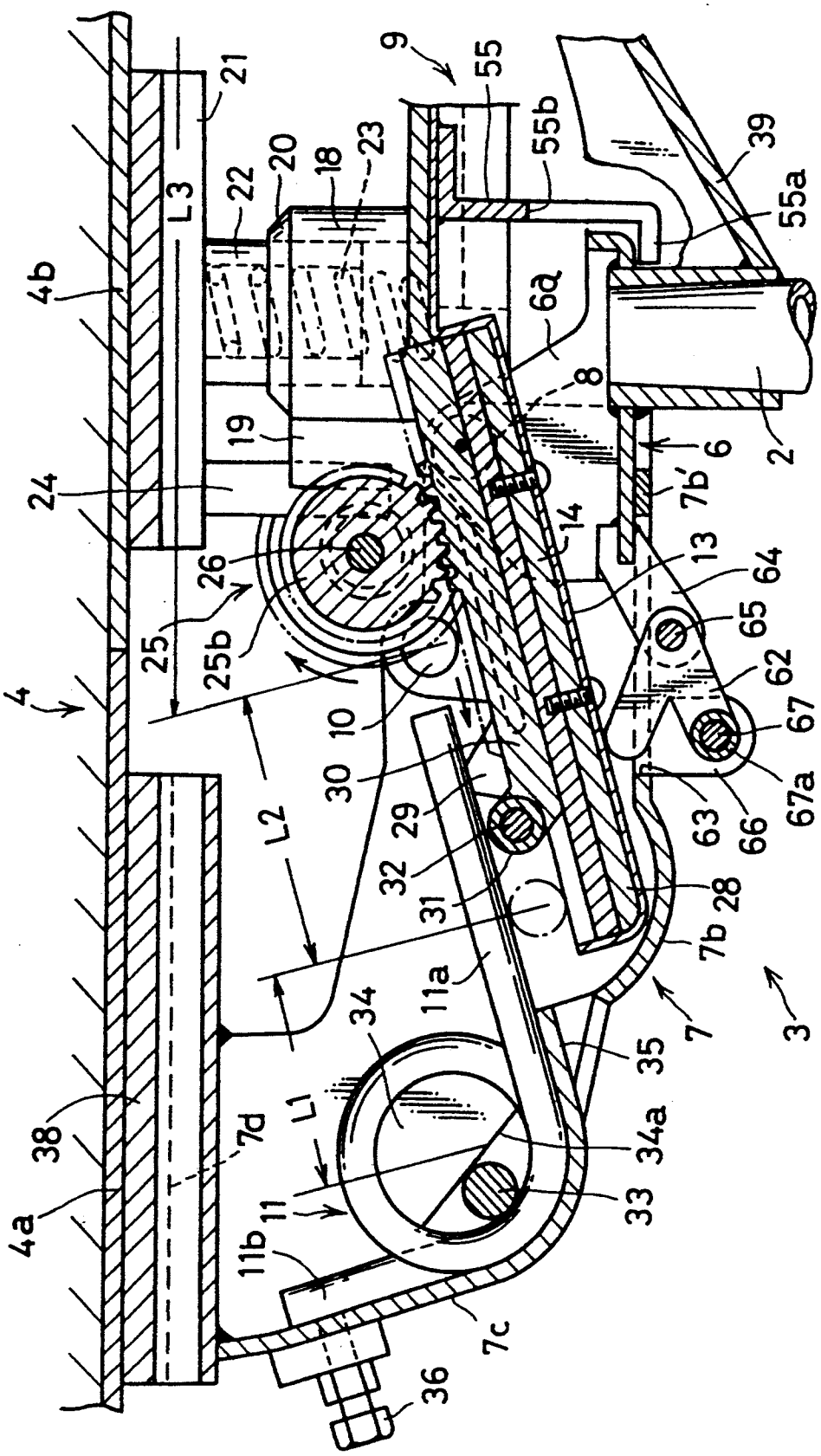
9
55
55b
39
55a
21
20
18
23
22
L3
4b
6a
8
19
24
6
2
7b'
14
13
64
26
25
25b
65
62
67
67a
66
63
4
10
30
29
32
31
28
7b
L2
11a
34
35
7
3
38
7d
L1
34a
33
4a
11
11b
7c
36

Fig. 9

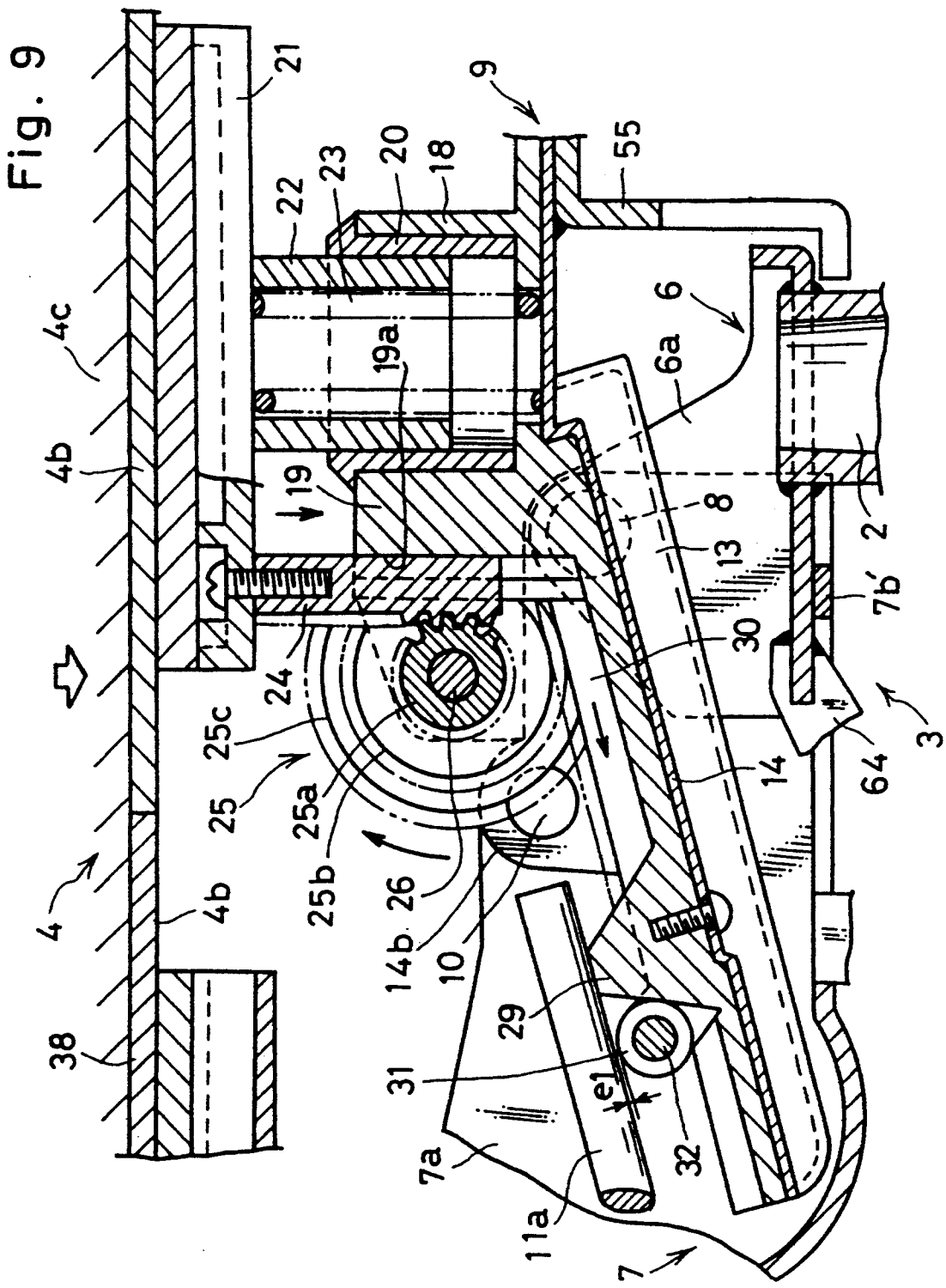
21
9
55
22
23
20
18
6
6a
4c
19a
4b
19
8
13
2
7b'
30
24
25c
25
25a
25b
26
14b
10
14
64
3
4
4b
38
29
31
e1
32
7a
11a
7

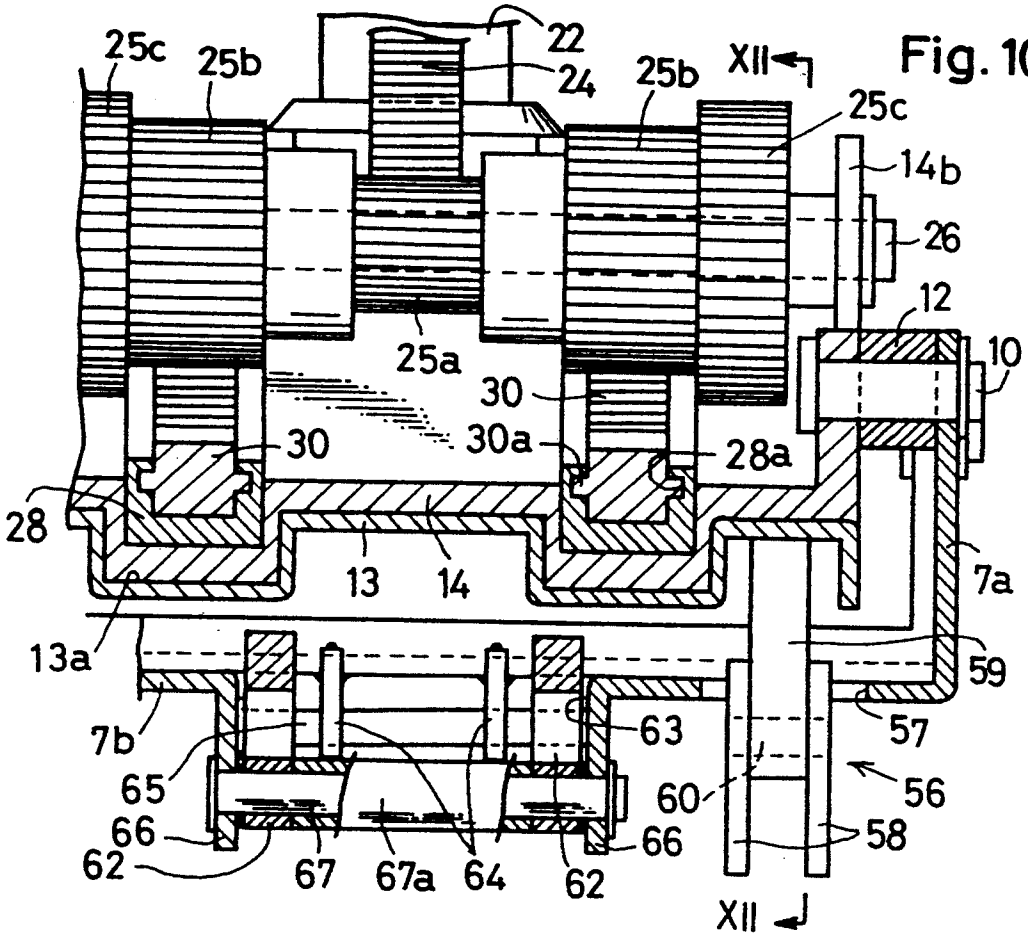
Fig. 10
25c
25b
22
24
25b
XII
25c
14b
26
12
10
25a
30
30a
30
28a
28
13
14
7a
13a
59
7b
63
57
65
60
56
66
66
58
62
67
67a
64
62
XII

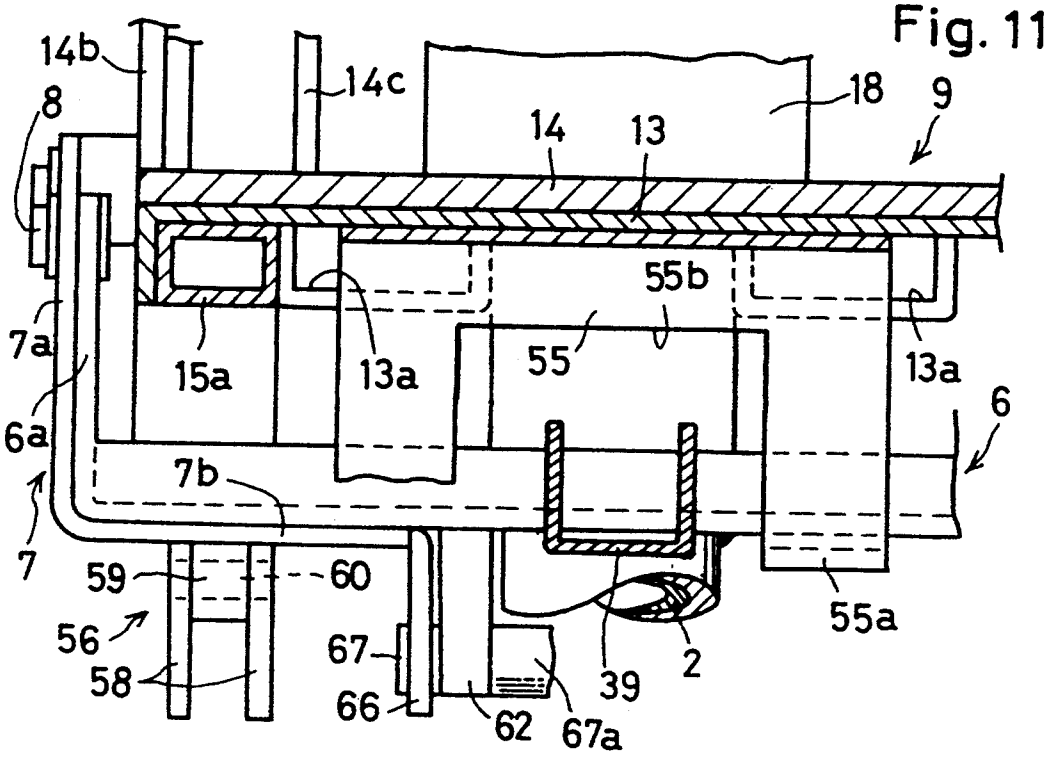
Fig. 11
14b
14c
18
9
8
14
13
55b
7a
15a
13a
55
13a
6a
6
7b
7
59
60
55a
56
67
58
66
62
67a
39
2

Fig. 12

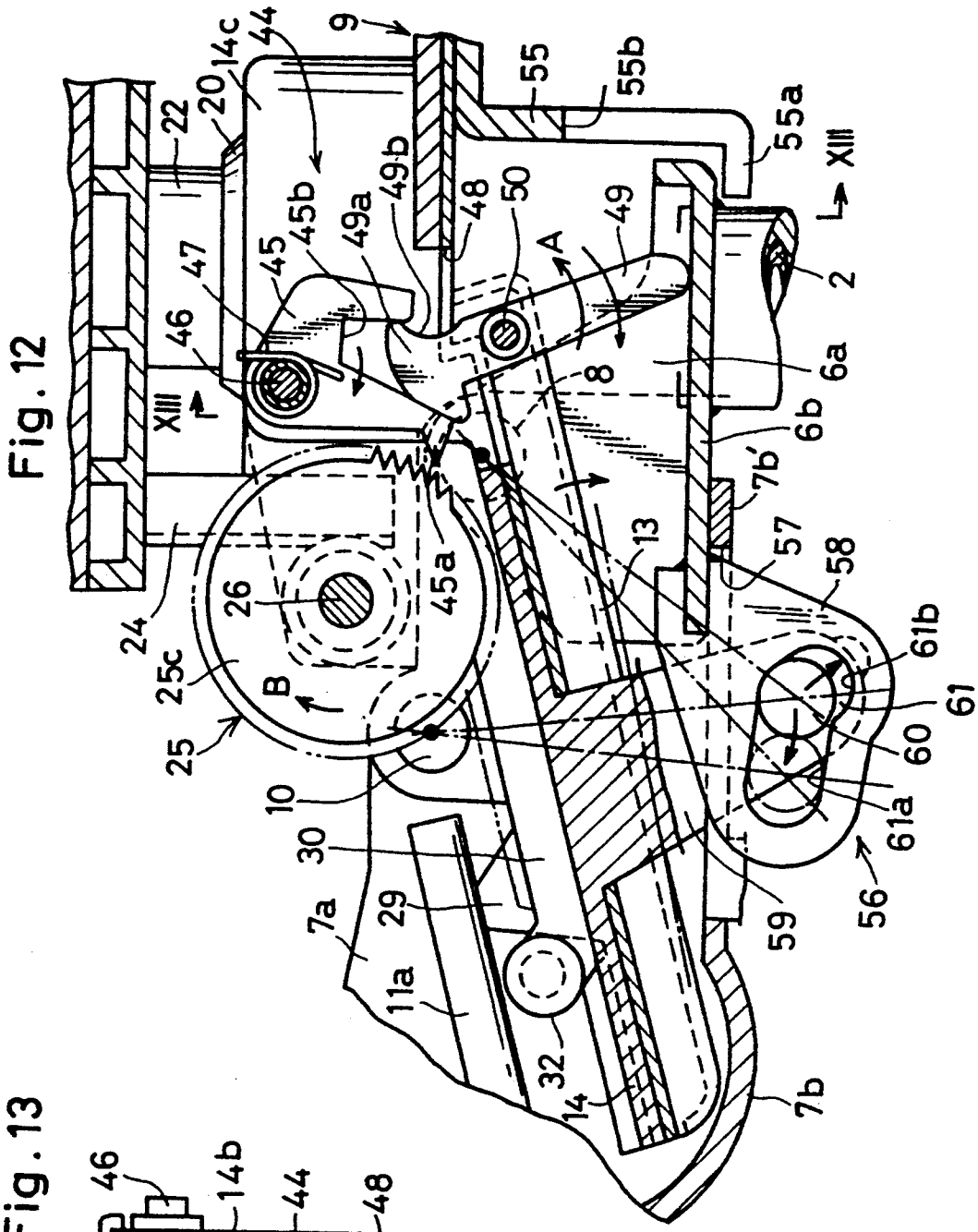
9
44
14c
20
22
55
55b
55a
XIII
49b
48
50
49
A
45b
49a
45
47
46
2
6a
8
6b
7b'
57
58
13
45a
26
24
25c
B
25
61b
61
60
61a
56
10
30
29
7a
11a
32
14
59
7b

Fig. 13

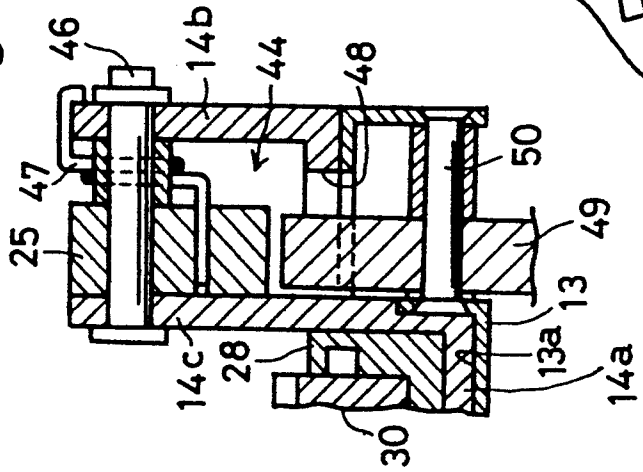
46
14b
44
48
50
47
25
49
13
13a
14c
28
14a
30

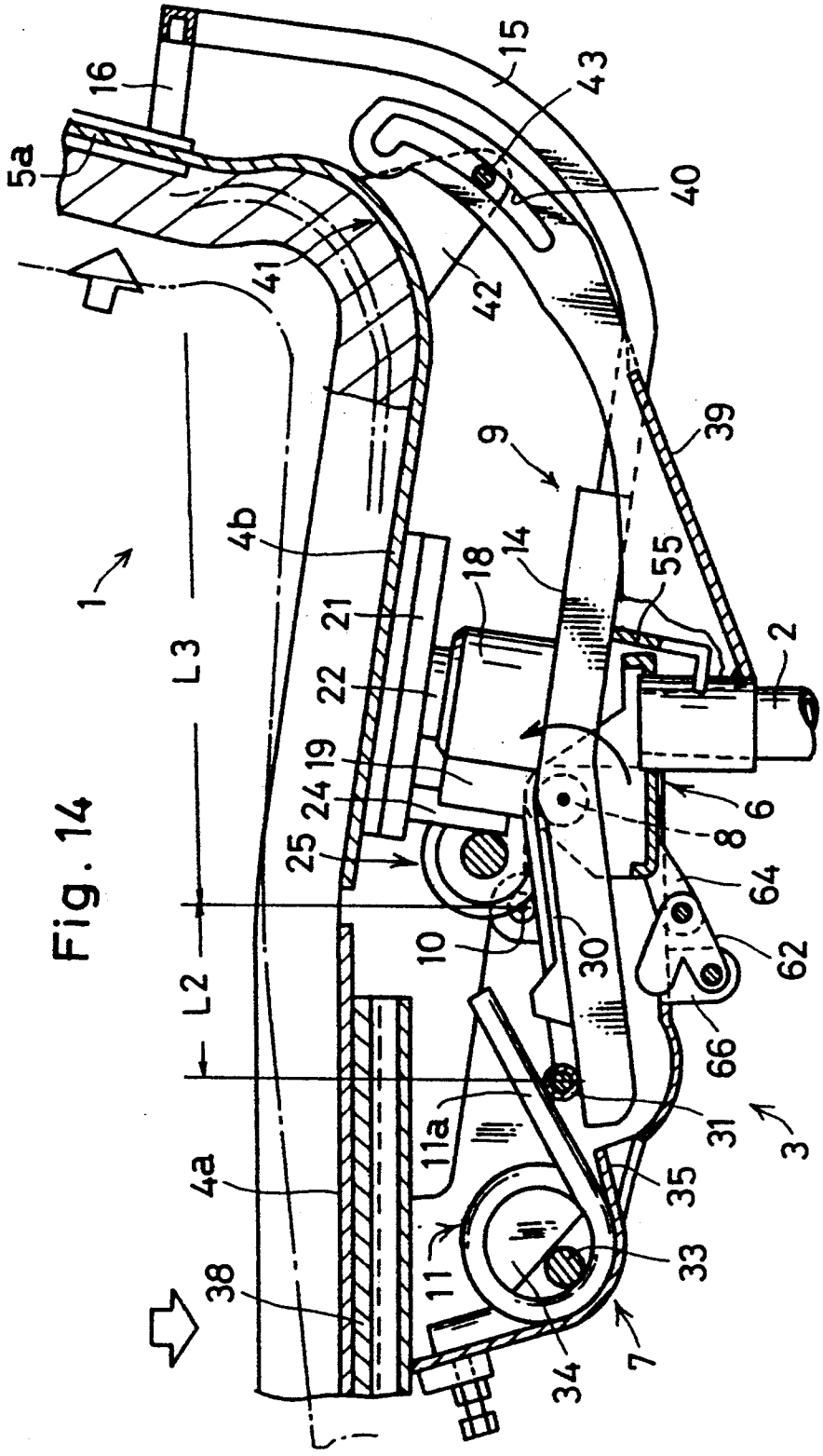
1
2
3
4a
4b
5a
6
7
8
9
10
11
11a
14
15
16
18
19
21
22
24
25
30
31
33
34
35
38
39
40
41
42
43
55
62
64
66
L2
L3

Fig. 14

Fig. 15

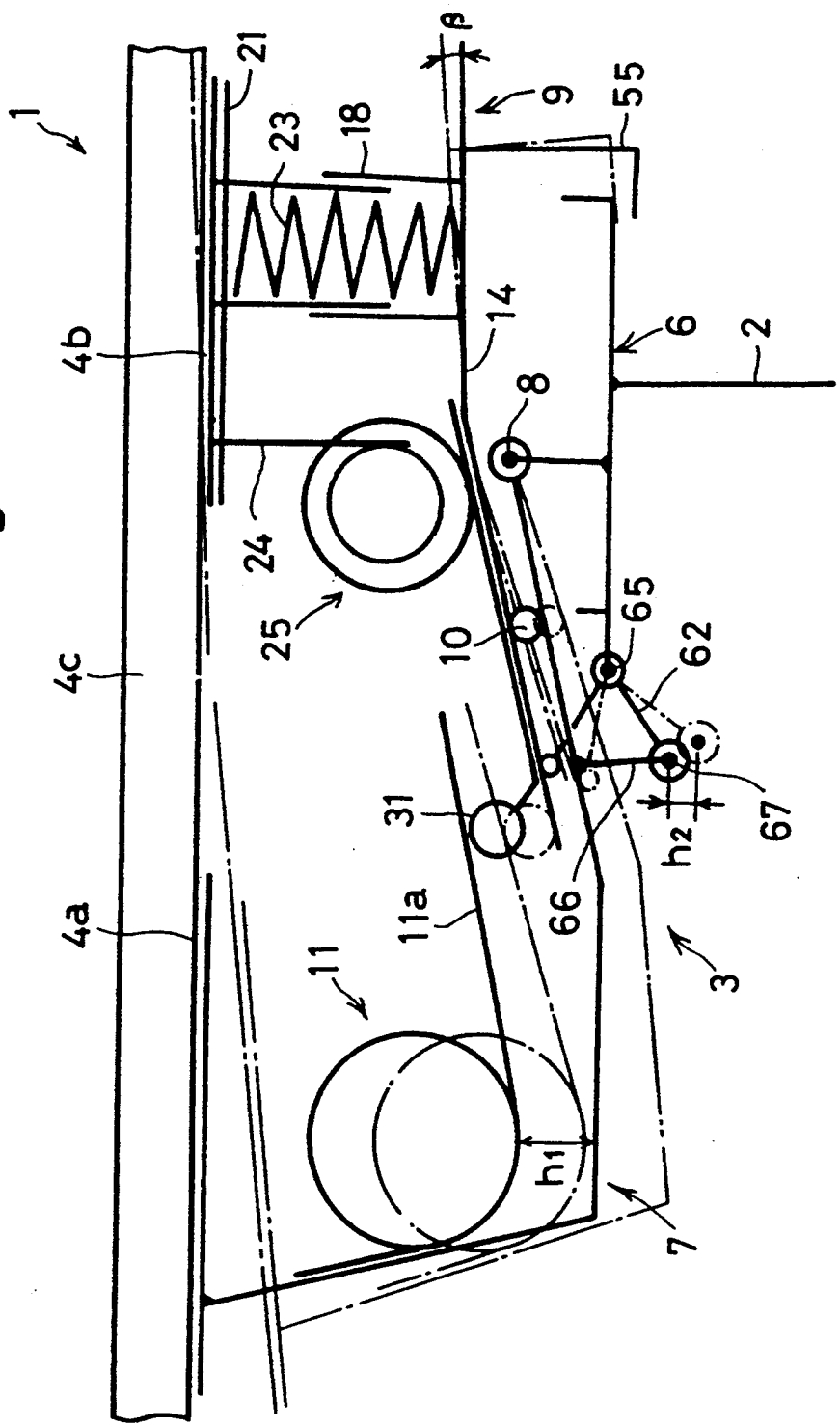

Fig.16

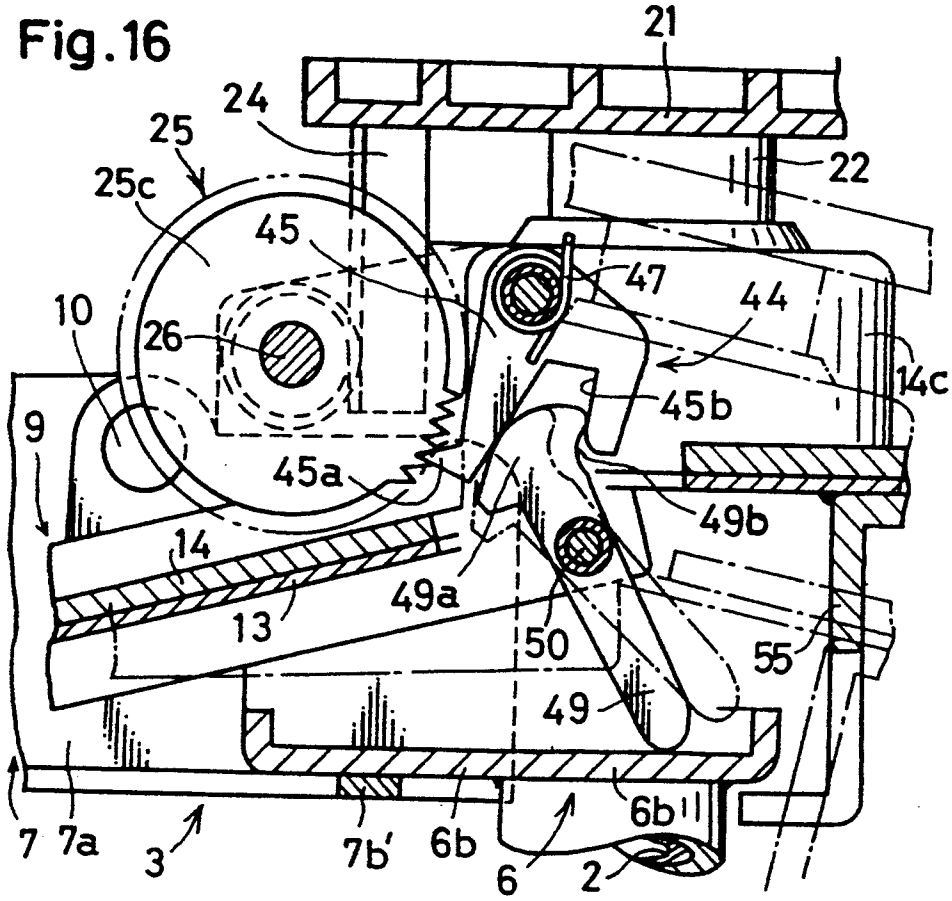
21
24
25
25c
22
45
47
44
10
26
14c
45b
9
45a
49b
14
49a
13
50
55
49
7
7a
3
7b'
6b
6
6b'
2

Fig.17

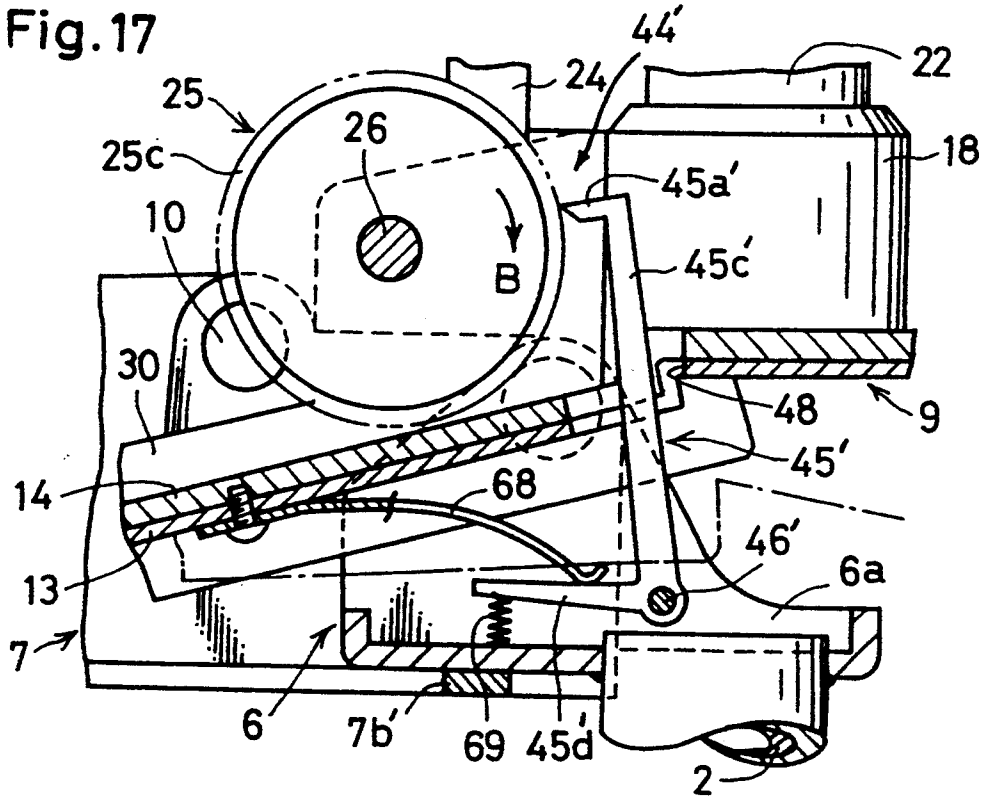
44'
22
24
25
26
18
25c
45a'
10
B
45c'
30
48
9
45'
14
68
46'
13
6a
7
6
7b'
69
45d
2

Fig. 18

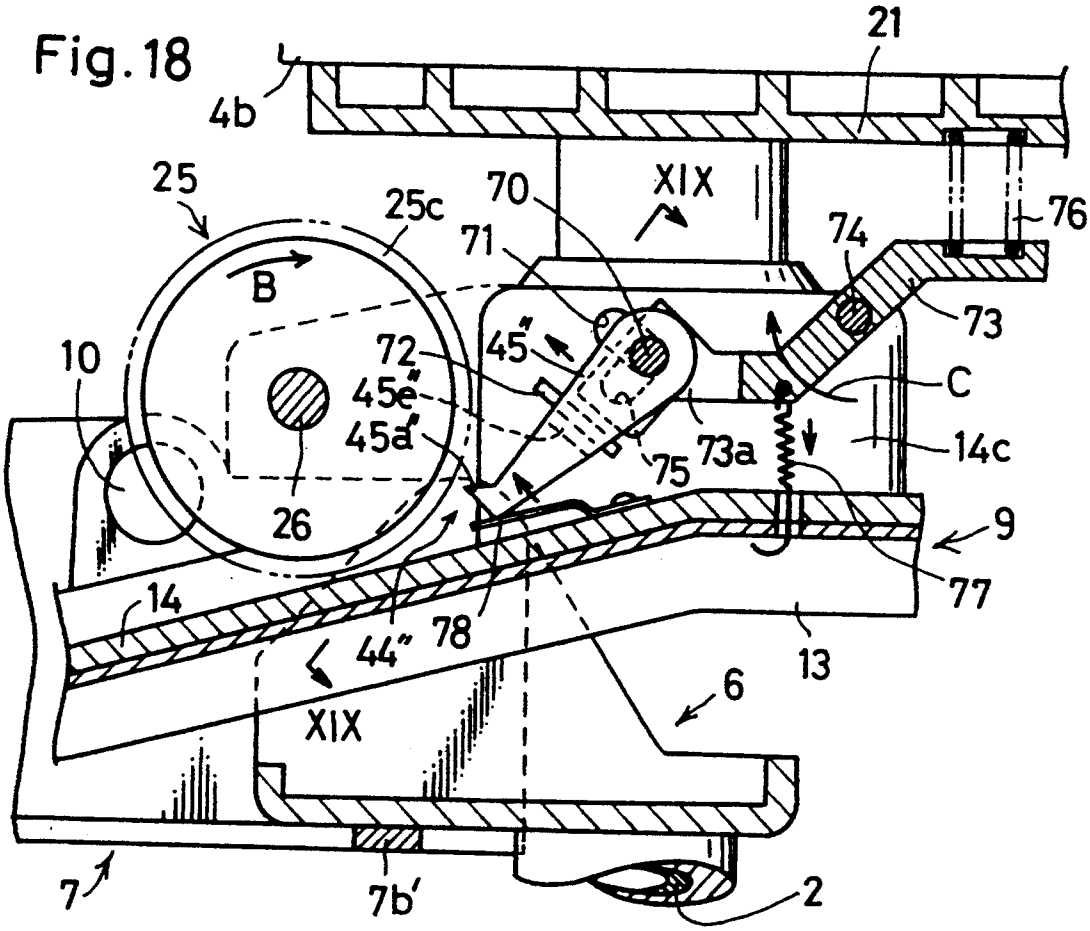
21
4b
25
25c
70
XIX
76
71
74
B
73
10
72
45"
C
45e"
45a"
73a
14c
75
26
9
77
14
78
44"
13
XIX
6
7
7b'
2

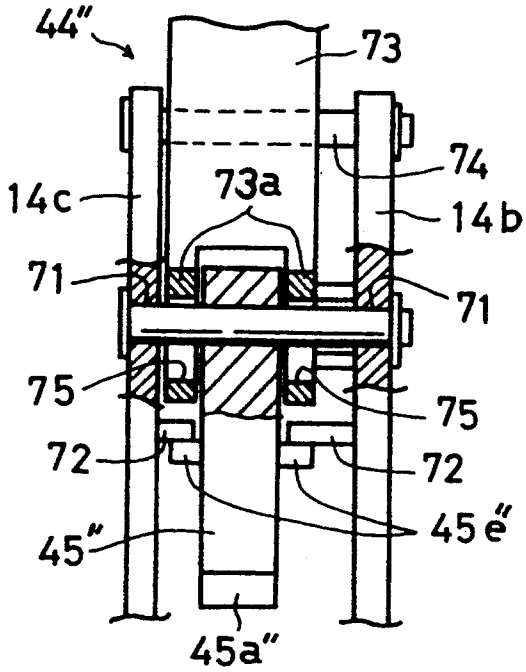
44"
73
74
14c
73a
14b
71
71
75
75
72
72
45"
45e"
45a"

Fig. 19

Fig. 20

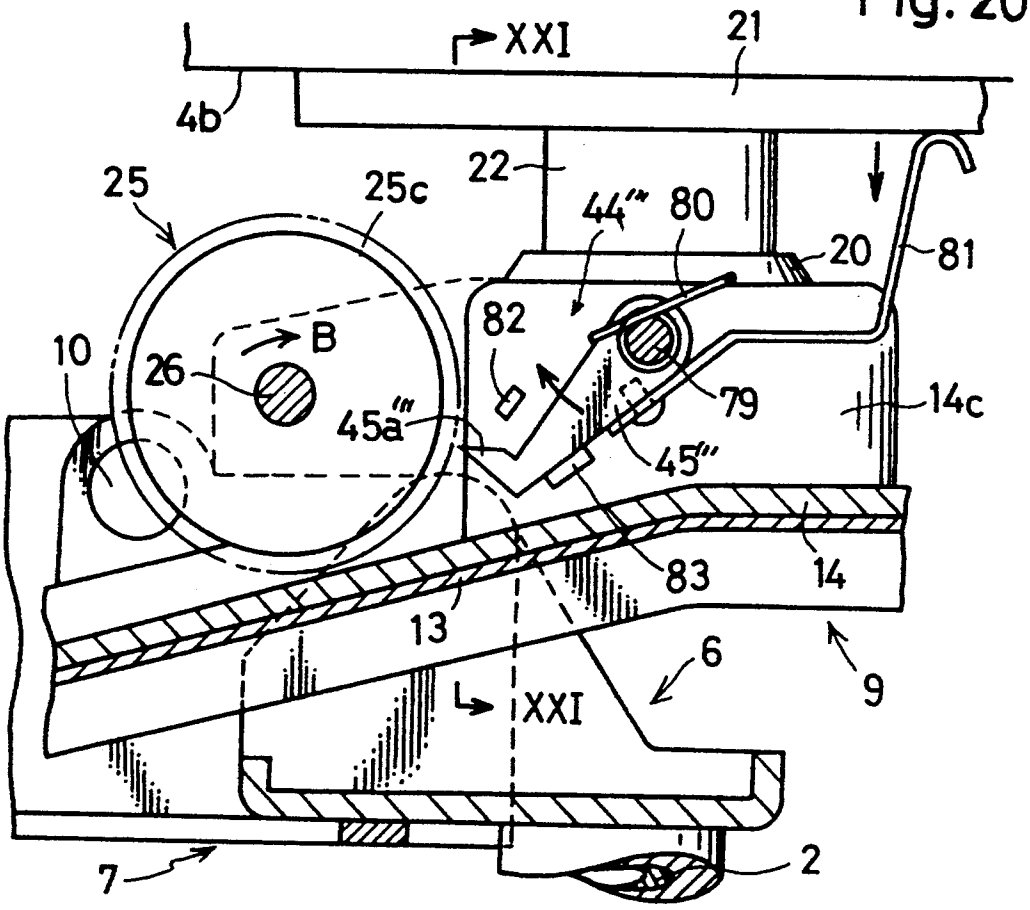
XXI
21
4b
22
25
25c
44'''
80
20
81
82
B
10
26
79
14c
45a'''
45'''
83
14
13
6
9
XXI
7
2

Fig. 21

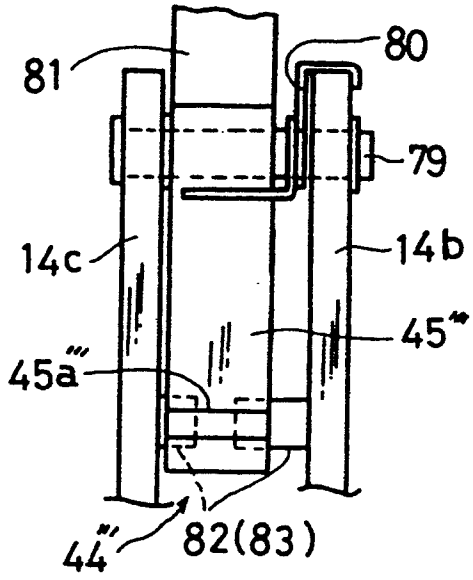
81
80
79
14c
14b
45'''
45a'''
44'''
82(83)

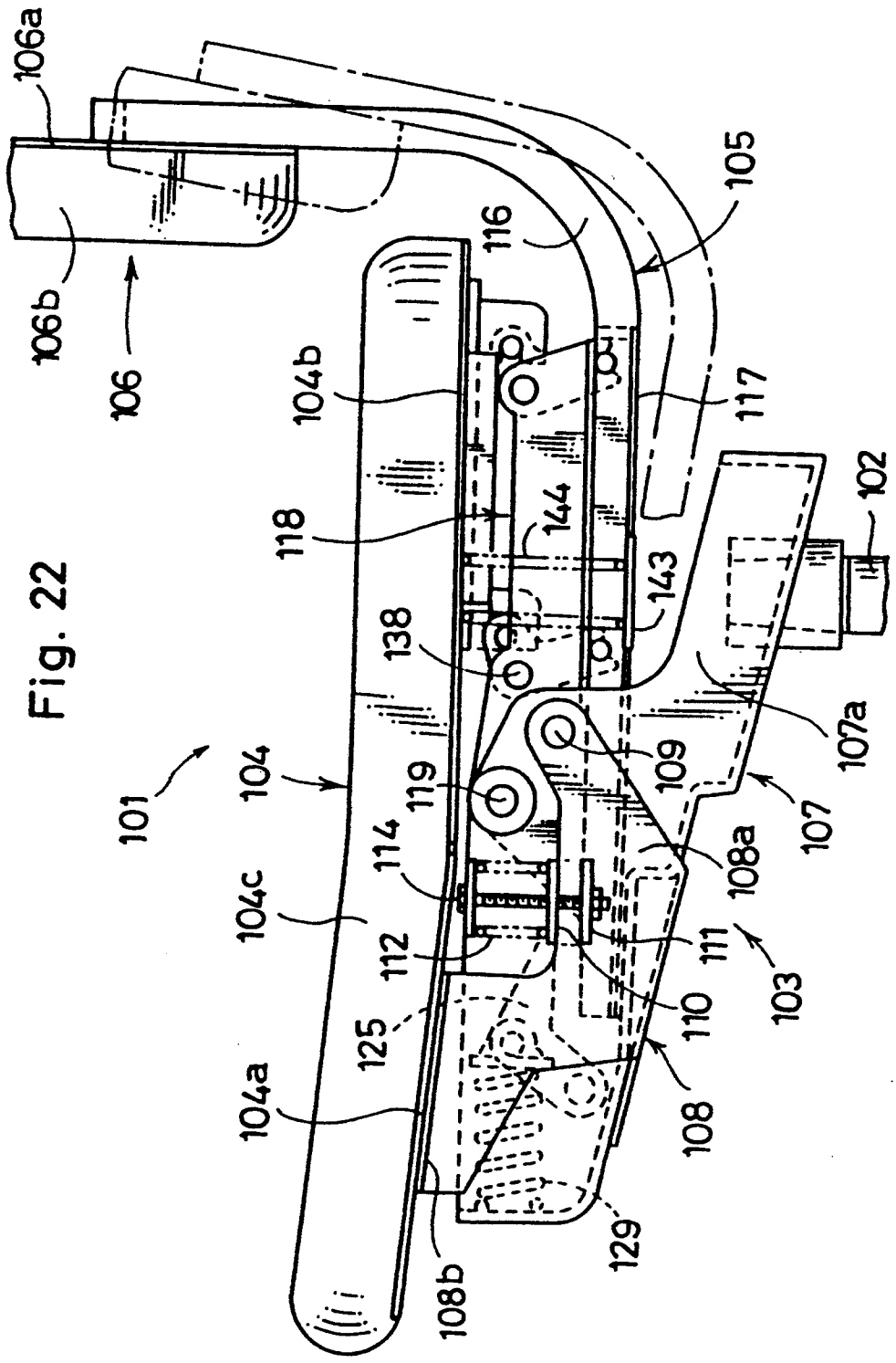
106a
106b
106
105
116
104b
117
118
144
143
138
102
107a
101
104
119
109
107
114
108a
104c
112
111
103
125
110
104a
108
108b
129

Fig. 22

Fig. 23

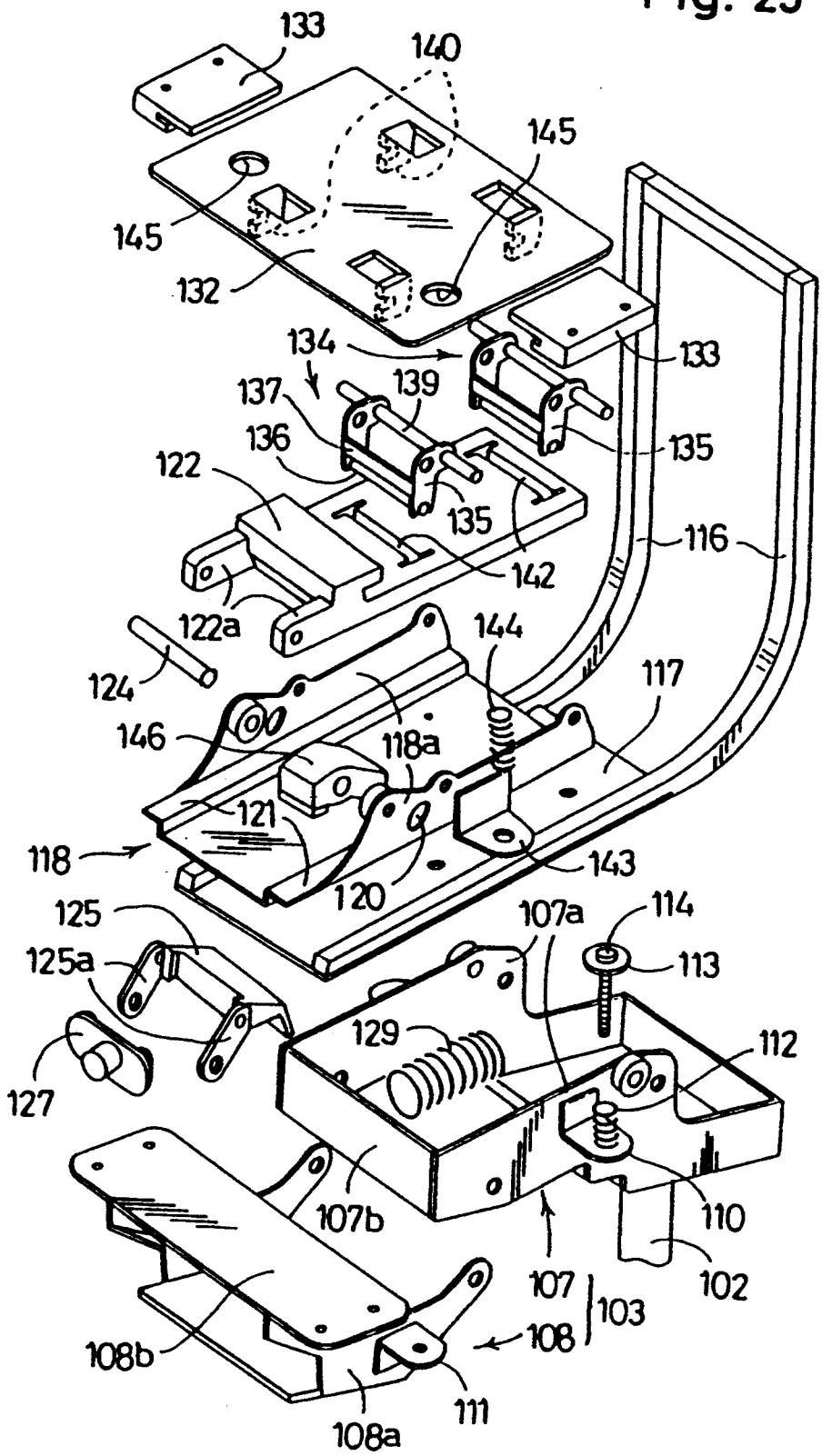
133
140
145
145
132
134
133
137
139
136
135
122
135
116
142
122a
144
124
117
146
118a
121
118
143
120
125
107a
114
125a
113
129
112
127
107b
110
107
102
103
108b
108
111
108a

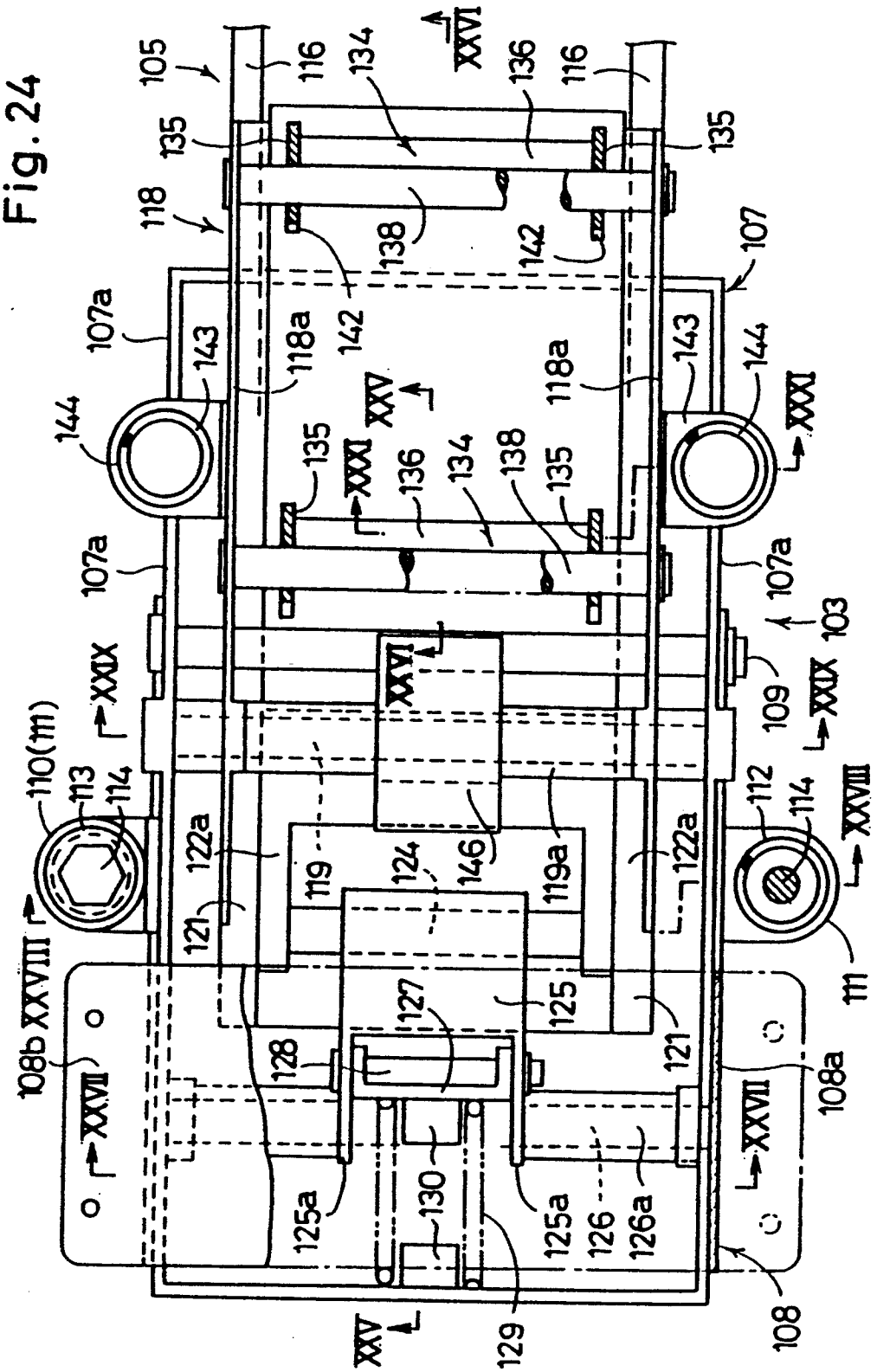
Fig. 24
105
116
134
XXVI
136
116
135
135
118
138
142
107
107a
143
118a
142
118a
143
144
144
XXV
XXXI
135
136
134
138
135
107a
107a
103
XXIX
XXVI
109
XXIX
110(111)
113
114
112
114
XXVIII
122a
119
124
146
119a
122a
121
111
XXVIII
108b
127
125
121
128
108a
XXVII
XXVII
125a
130
125a
126
126a
129
108
XXV

Fig. 25

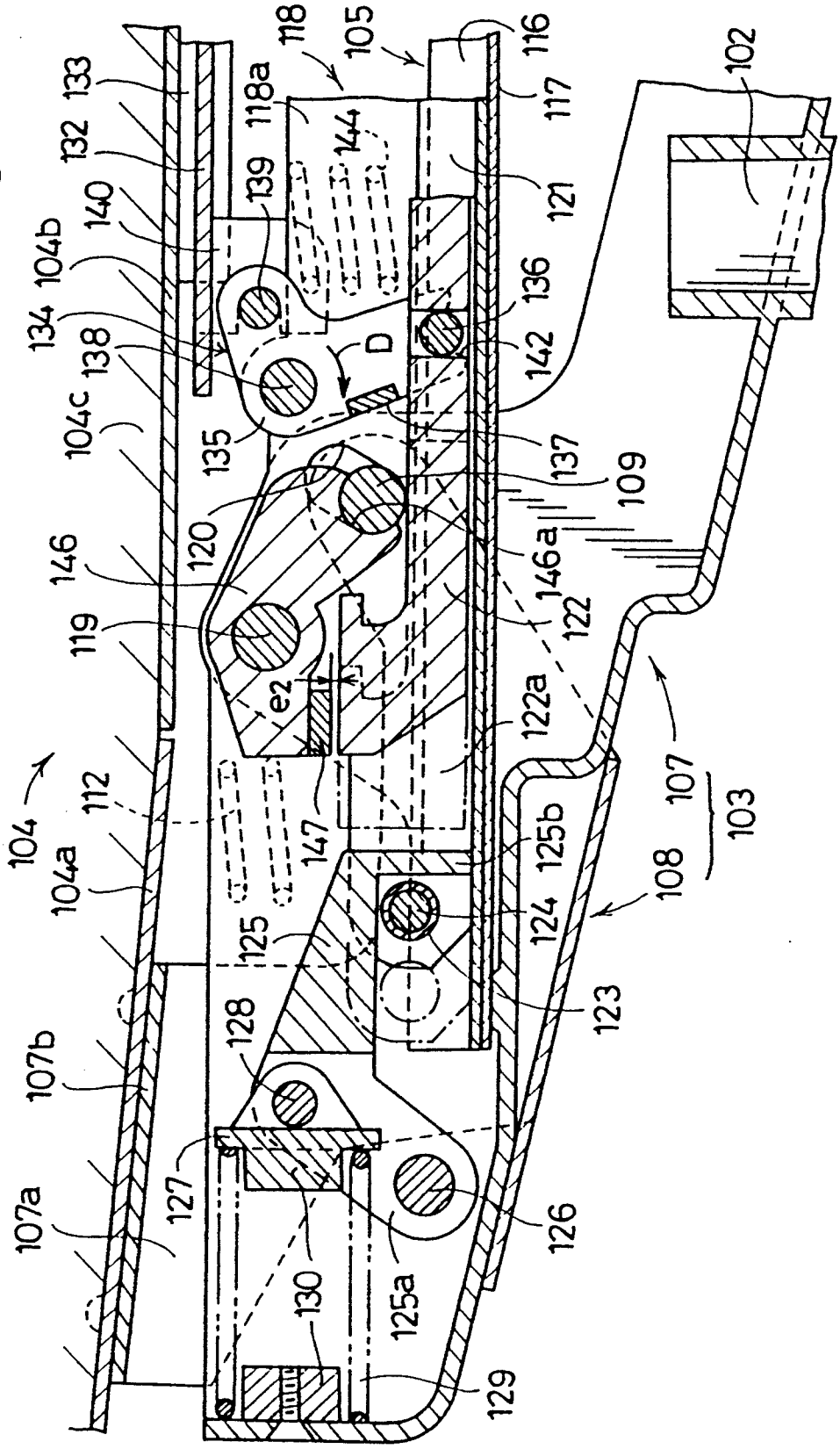

102
103
104
104a
104b
104c
105
107
107a
107b
108
109
112
116
117
118
118a
119
120
121
122
122a
123
124
125
125a
125b
126
127
128
129
130
132
133
134
135
136
137
138
139
140
142
144
146
146a
147
D
e2

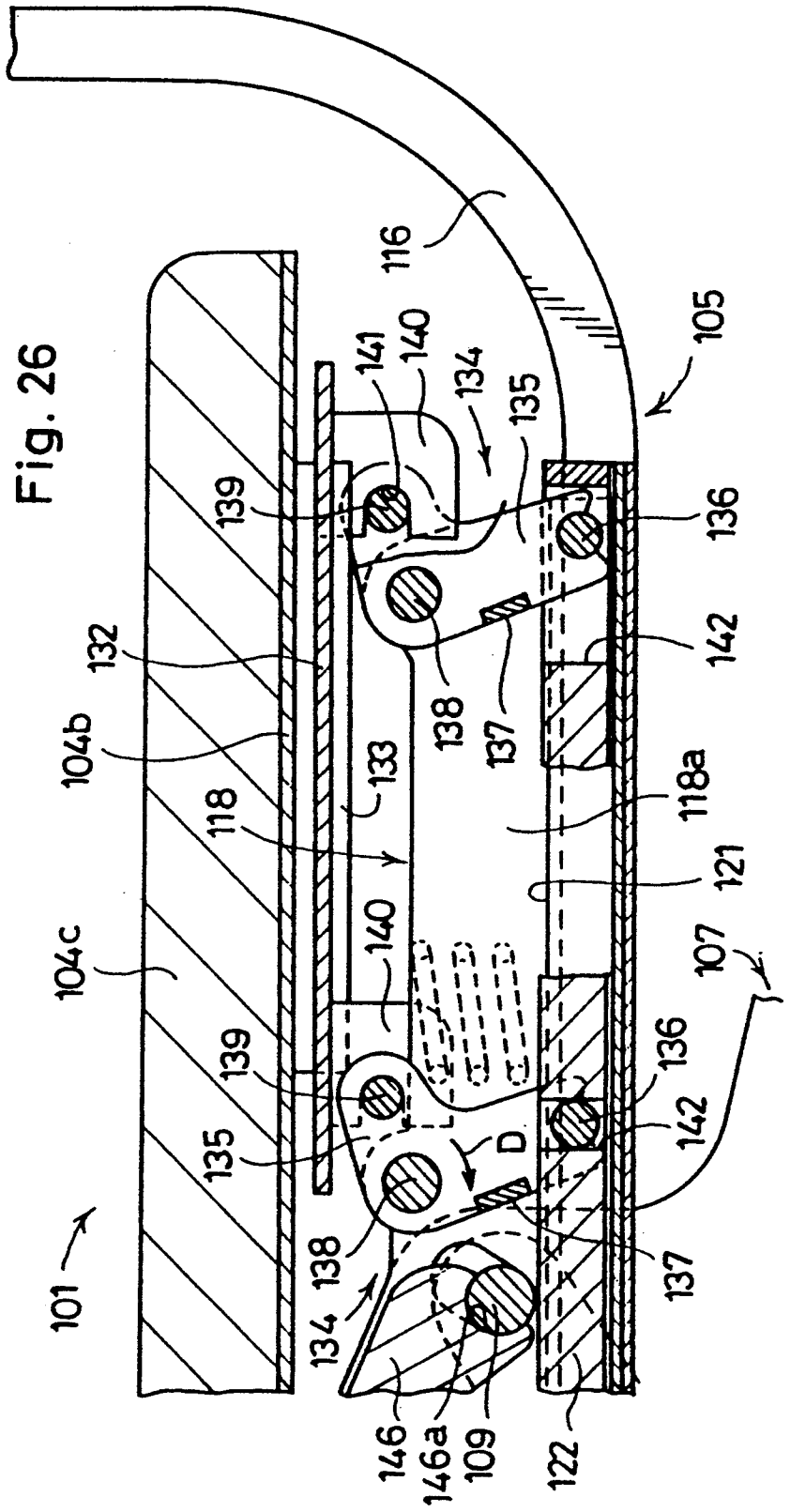
116
105
141
140
134
135
139
136
132
142
104b
138
137
133
118a
118
121
104c
140
107
139
136
135
D
142
101
138
137
134
146
146a
109
122

Fig. 26

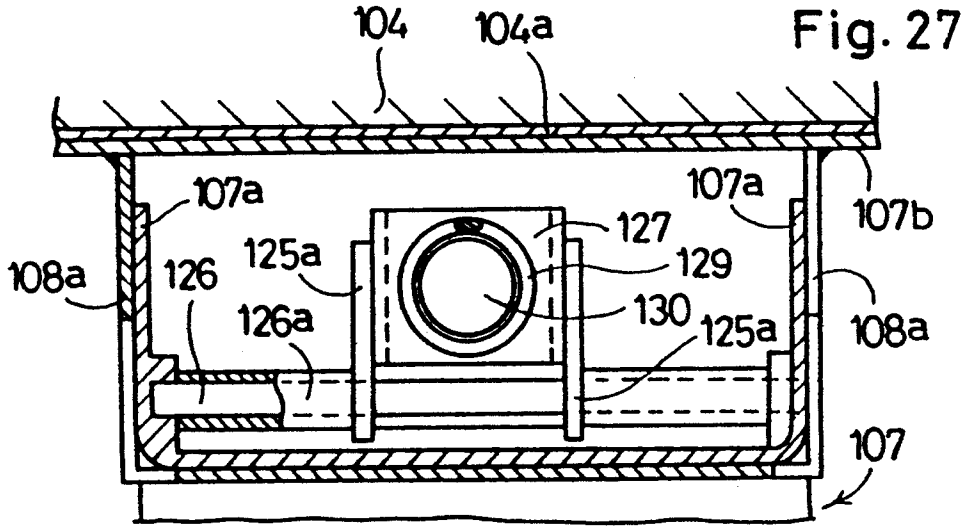

Fig. 27

Fig. 28

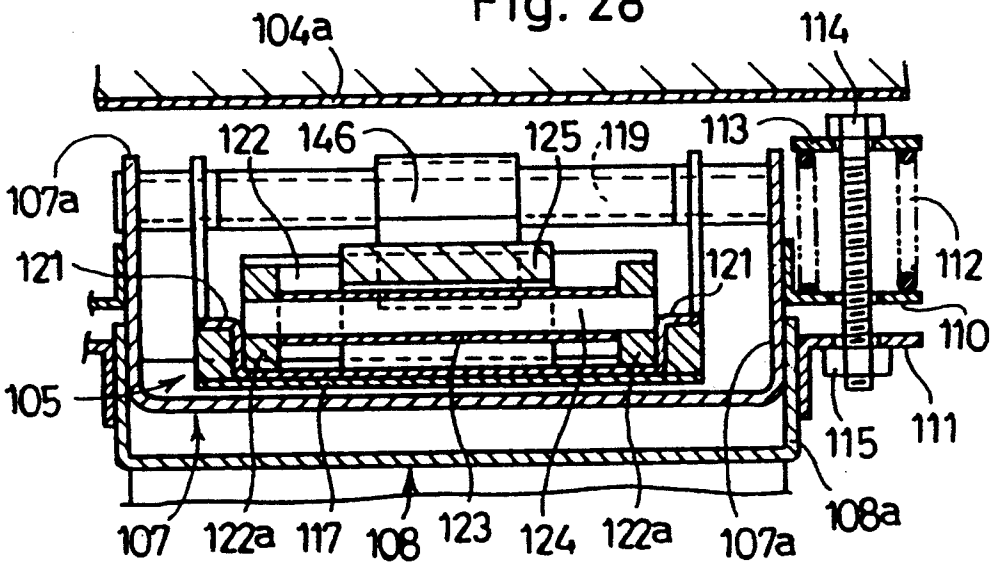

Fig. 29

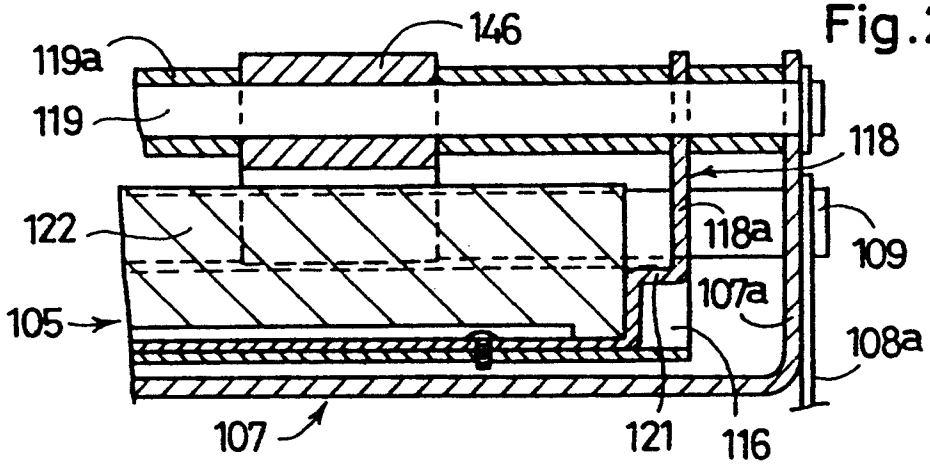

Fig. 30a

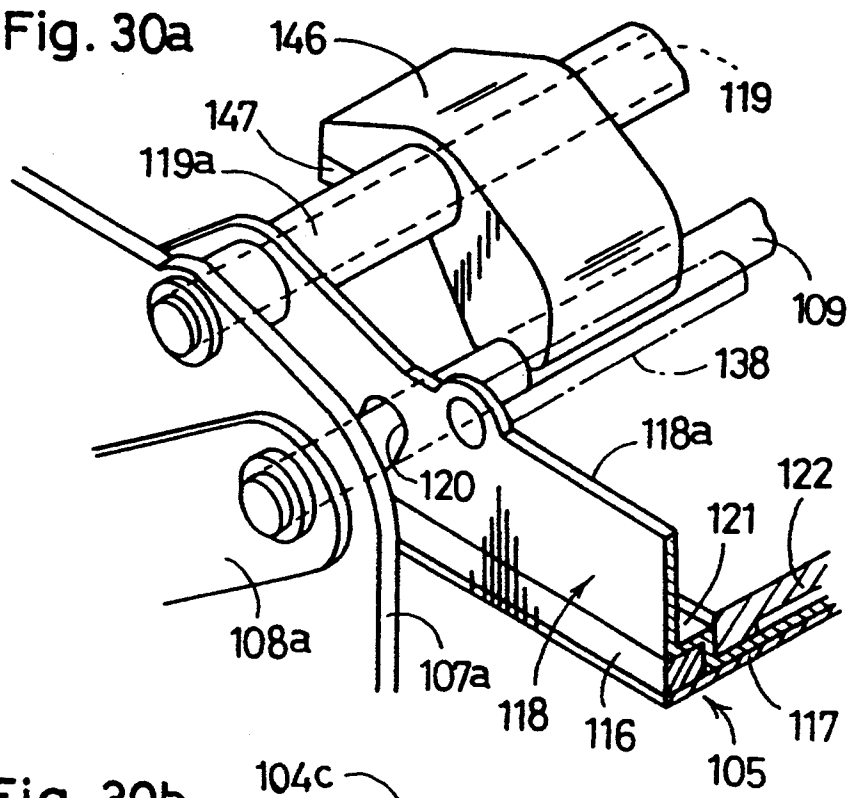

Fig. 30b

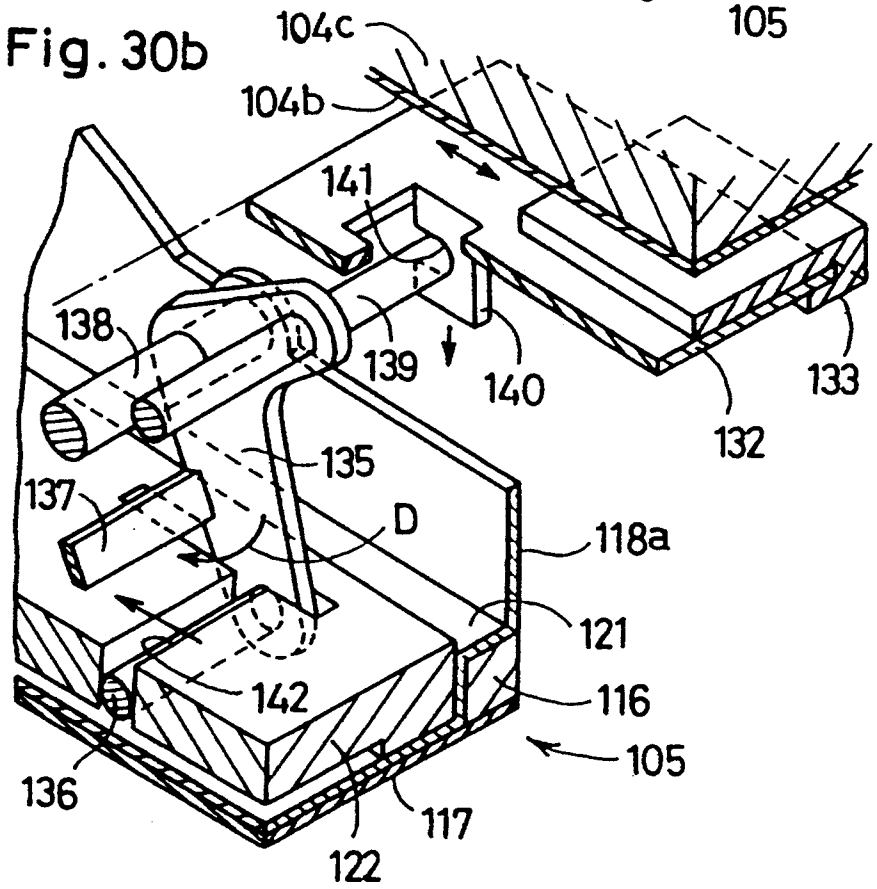

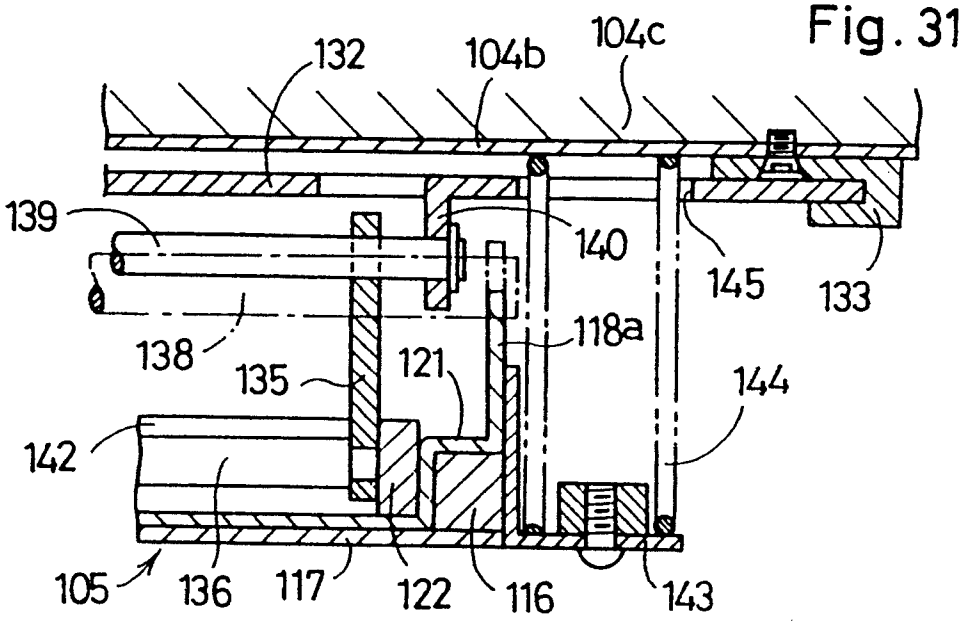
Fig. 31
132
104b
104c
139
140
145
133
138
118a
135
121
144
142
105
136
117
122
116
143

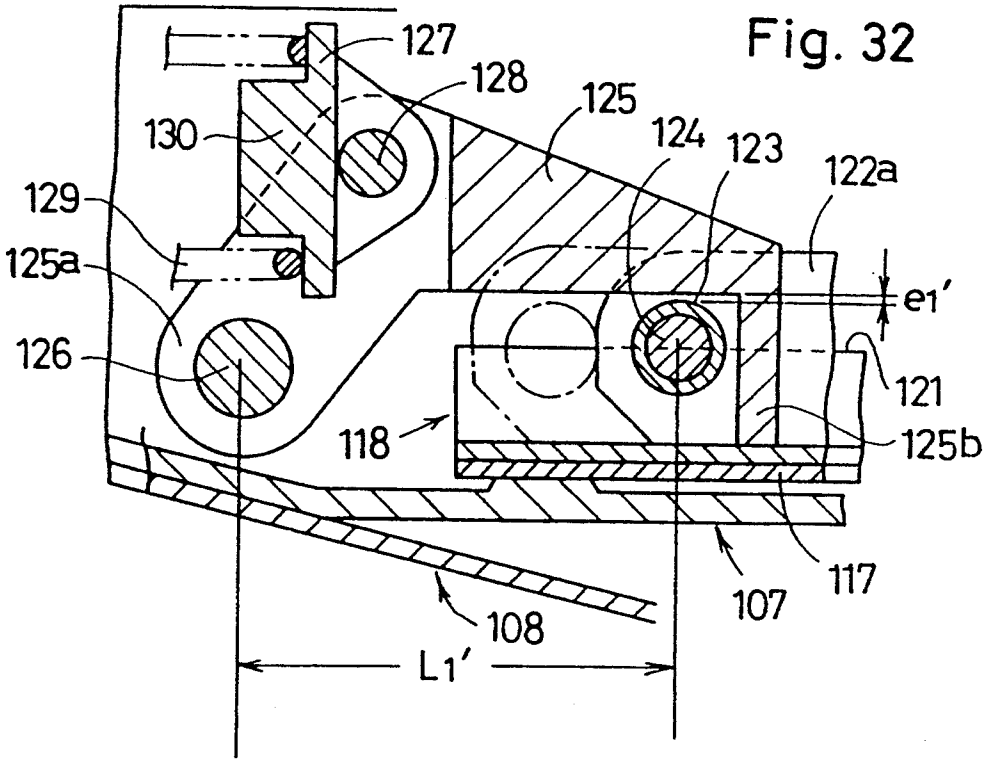
Fig. 32
127
128
125
130
124
123
122a
129
125a
e1'
126
121
118
125b
117
107
108
L1'

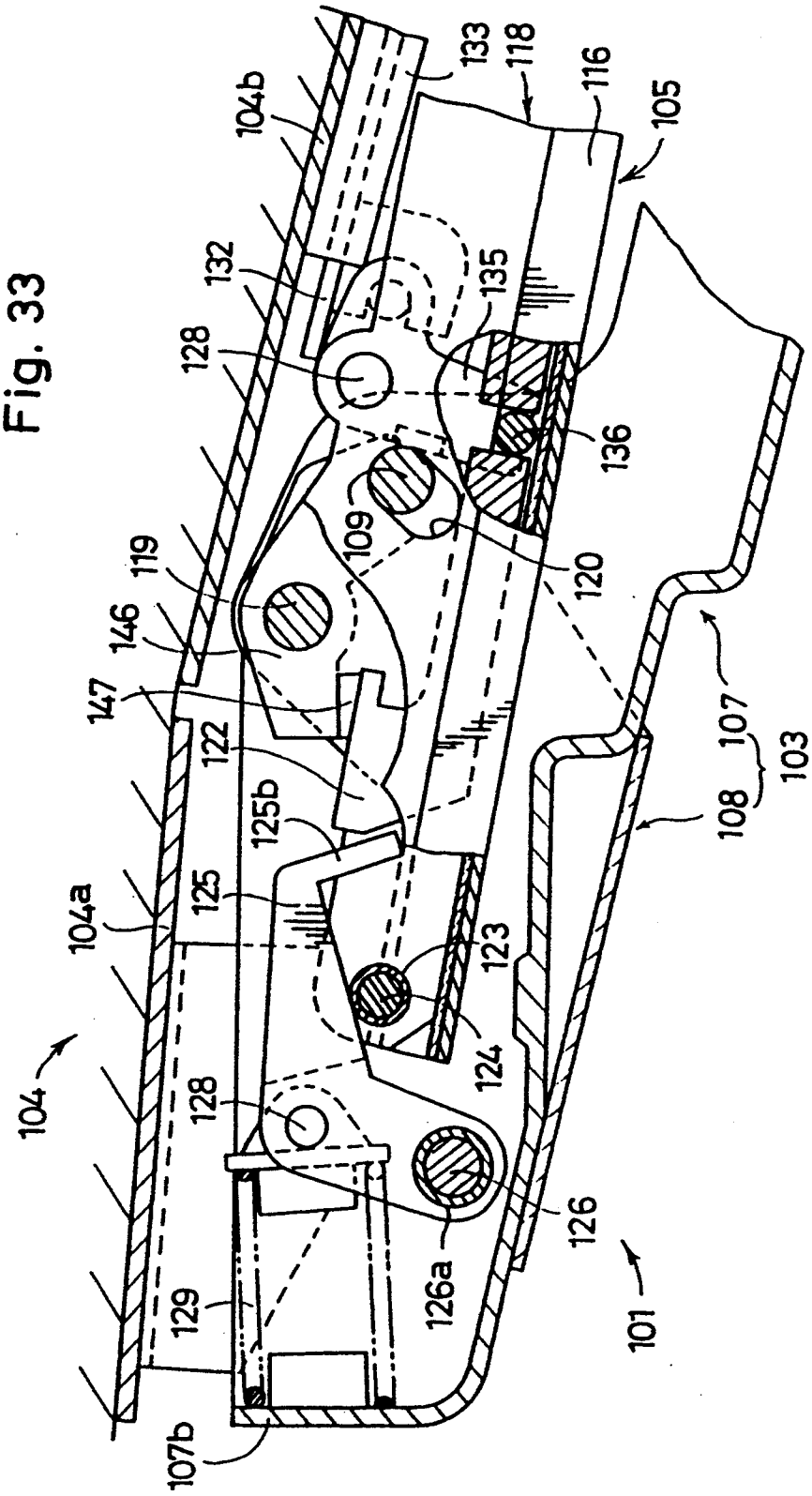
104b
133
118
116
105
132
135
128
136
109
120
119
146
147
122
125b
107
103
108
104a
125
123
124
104
128
126
126a
101
129
107b

Fig. 33

Fig. 34

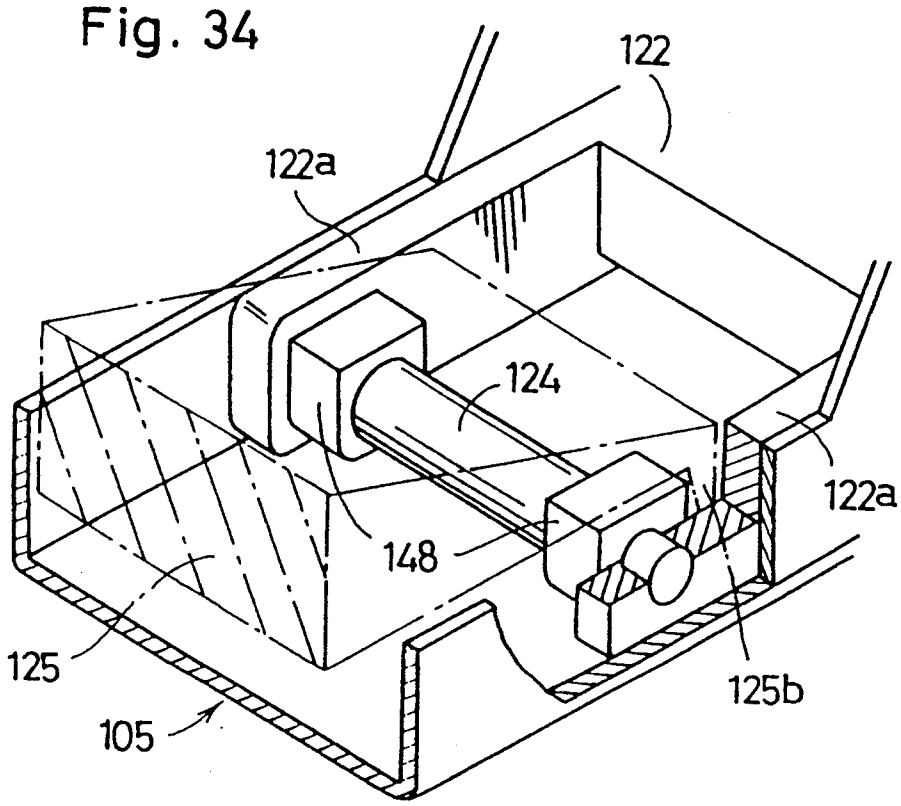
122
122a
124
122a
148
125
125b
105

Fig. 35

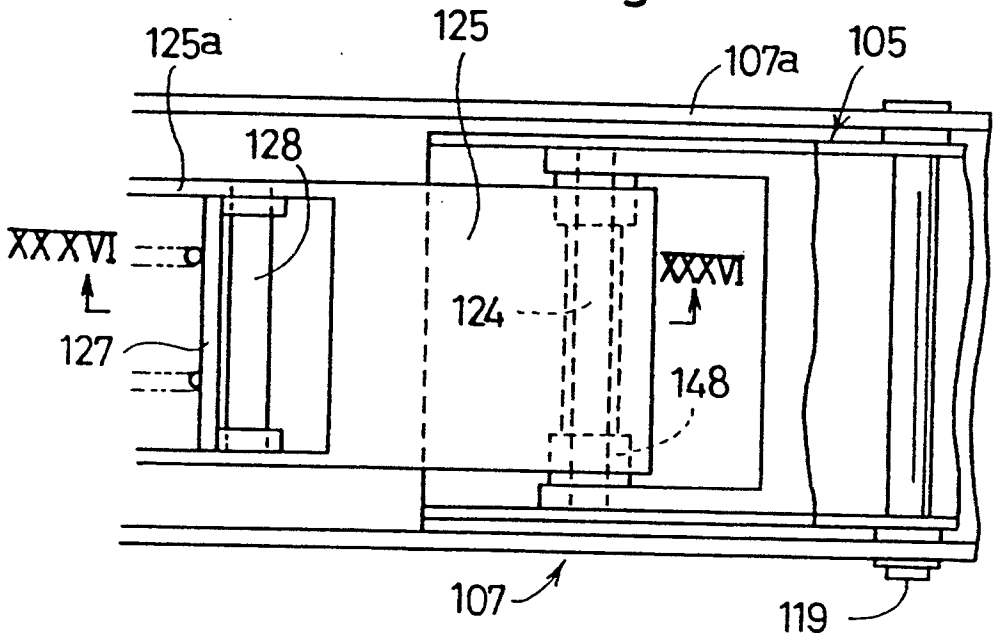
125a
125
107a
105
128
XXXVI
XXXVI
124
127
148
107
119

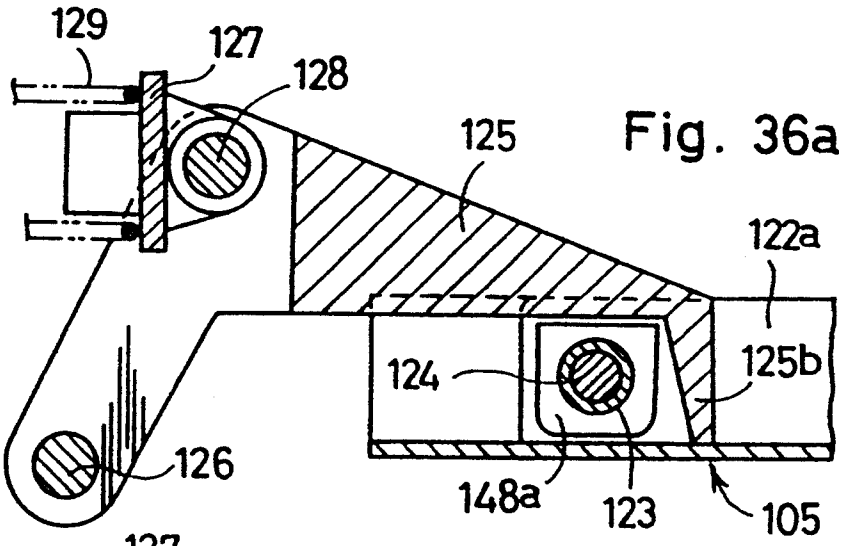

Fig. 36a

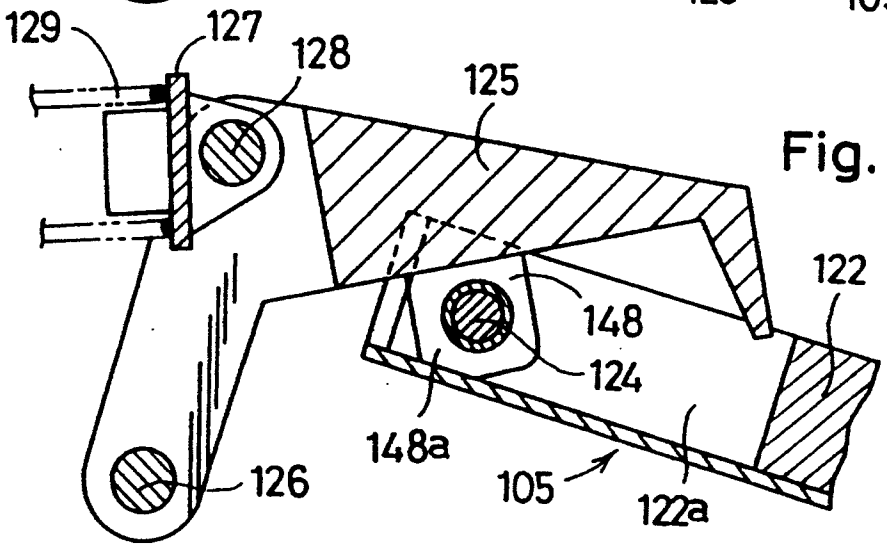

Fig. 36b

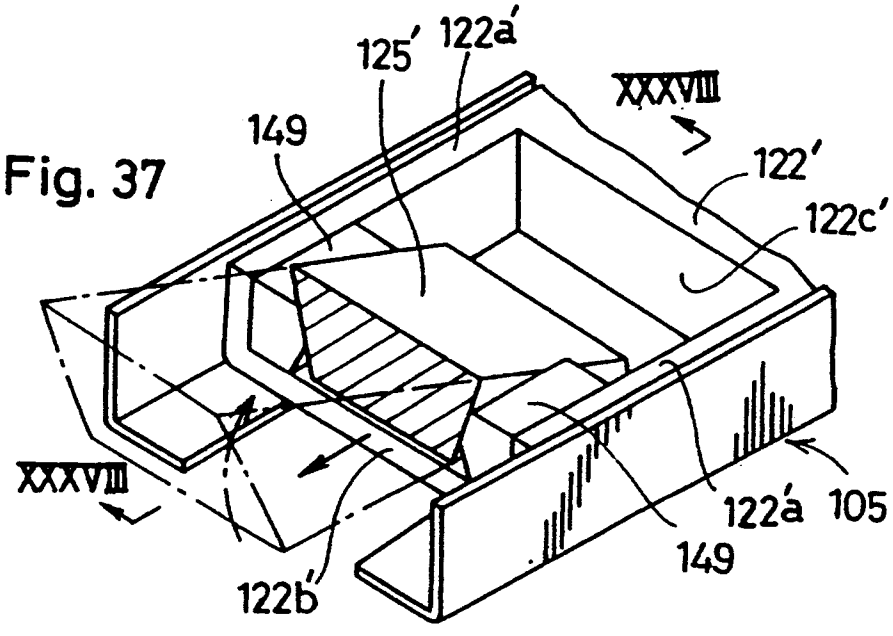

Fig. 37

Fig. 38

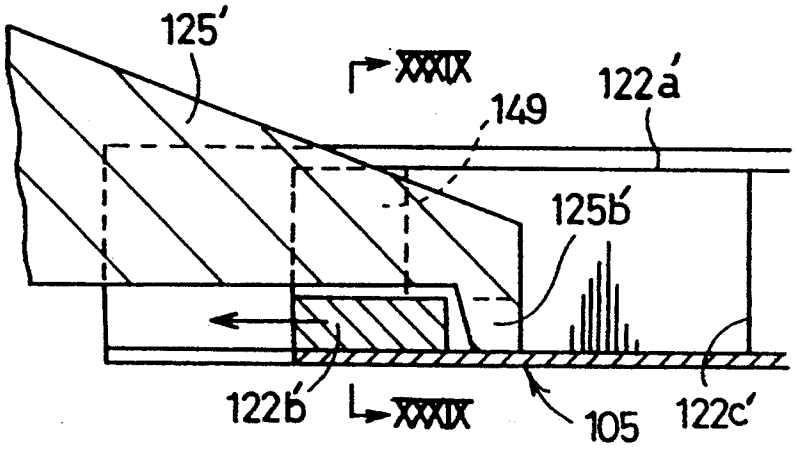
125'
XXXIX
149
122a'
125b'
122b'
XXXIX
105
122c'

Fig. 39

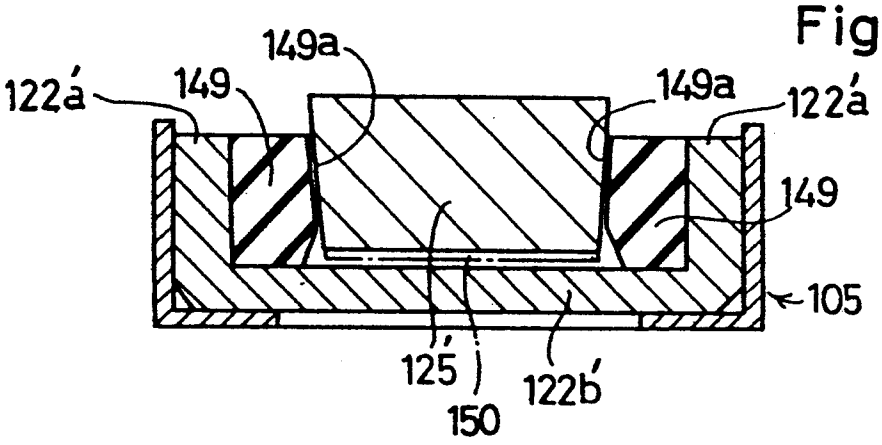
149a
122a'
149
149a
122a'
149
105
125'
150
122b'

TILTING CONTROL ASSEMBLY FOR CHAIR

BACKGROUND OF THE INVENTION

1. Field of the Invention

This invention relates generally to chairs for use in offices for example. More particularly, the invention relates to a chair of the type wherein at least the seat back are designed to be tiltable rearwardly against a spring or springs.

2. Description of the Prior Art

There have been proposed various types of tiltable chairs wherein at least one of the seat and the seat back is tiltable against a tilting control spring or springs. The most typical is a rocking chair wherein the seat is rearwardly tiltable together with the chair back. Such a chair enables the user to assume a relaxing posture occasionally during desk work for example.

U.S. Pat. No. 5,080,318 discloses a chair tilting control assembly wherein the supportive force of a tilting control spring device is automatically adjusted to suit the weight of any user, so that the spring device provides a stronger support for a heavier user than for a lighter user. Another chair tilting control assembly having similar automatic adjustment (though slightly different in the operating principle) is also disclosed in European Patent Application Laid-open No. 0435297.

According to either one of these patent documents, when the user sits on the chair, the seat moves downward against a weight responsive spring device which deforms proportionally to the user's weight. The downward movement of the seat results in a corresponding movement of a displacing mechanism for adjusting the supportive force of the tilting control spring device to suit the user's weight. Thus, when the user subsequently assumes a reclining posture, the seat back tilts rearwardly against the thus adjusted tilting control spring device, so that the user can enjoy comfortable reclining.

In reality, however, if the user leans on the seat back, a part of the user's weight is taken by the seat back. As a result, the seat is moved up slightly by the weight responsive spring device, thereby causing a slight returning movement of the displacing mechanism. Thus, the supportive force or ability of the tilting control spring device deviates slightly from the previously adjusted value, consequently failing to provide comfortable tilting control. Obviously, the degree of such deviation increases as the user reclines more.

SUMMARY OF THE INVENTION

It is, therefore, an object of the present invention to provide a chair tilting control assembly which is capable of automatically adjusting the tilting support ability of the tilting control spring or springs and which is further capable of holding the thus adjusted tilting support ability at least at the time of rearwardly tilting a seat back.

According to the present invention, there is provided a tilting control assembly for a chair, the chair comprising: support means; a seat supported above the support means; and a seat back arranged behind the seat to tilt rearwardly; the tilting control assembly comprising: tilting control spring means for elastically supporting the seat back against rearward tilting thereof via load applying means; and displacing means responsive to a downward load applied to the seat for causing relative displacement between the tilting control spring means and the load applying means in a manner such that the tilting control spring means provides a progressively larger supportive force as the downward load increases; wherein the tilting control assembly further comprises lock means for preventing reverse relative movement between the tilting control spring means and the load applying means at least while the seat back is rearwardly tilted.

The lock means may be designed to actuate only when the seat back starts tilting rearward. Alternatively, the lock means may be designed to actuate immediately when the downward load is applied to the seat. In the latter case, the lock means allows forward relative movement between the tilting control spring means and the load applying means but prevents reverse relative movement between these two components.

Other objects, features and advantages of the present invention will be fully understood from the following detailed description of the preferred embodiments given with reference to the accompanying drawings.

BRIEF DESCRIPTION OF THE DRAWINGS

In the accompanying drawings:

FIG. **1** is a side view, partially in section, showing the seat back of a rocking chair according to a first embodiment of the present invention;

FIG. **2** is a sectional side view showing the entirety of the same rocking chair;

FIGS. **3** to **5** are perspective views showing principal portions of the same rocking chair in an exploded state;

FIG. **6** is a sectional view taken on lines VI—VI in FIG. **1**;

FIG. **7** is a sectional view taken along lines VII—VII in FIG. **1**;

FIG. **8** is a sectional view taken along lines VIII—VIII in FIG. **1**;

FIG. **9** is a sectional view taken on lines IX—IX in FIG. **6**;

FIG. **10** is a sectional view taken on lines X—X in FIG. **6**;

FIG. **11** is a sectional view taken along lines XI—XI in FIG. **6**;

FIG. **12** is a sectional view taken along lines XII—XII in FIGS. **6** and **10**;

FIG. **13** is a sectional view taken on lines XIII—XIII in FIG. **12**;

FIG. **14** is a sectional side view showing the same rocking chair in a rearwardly tilted state;

FIG. **15** is a schematic side view illustrating the operation of the same rocking chair at the time of forward tilting;

FIG. **16** is a sectional view similar to FIG. **12** to show a locking device in its actuated state;

FIG. **17** is a sectional view similar to FIG. **16** but showing a lock device according to a second embodiment of the present invention;

FIG. **18** is a sectional view similar to FIG. **16** but showing a lock device according to a third embodiment of the present invention;

FIG. **19** is a sectional view taken along lines XIX—XIX in FIG. **18**;

FIG. **20** is a sectional view also similar to FIG. **16** but showing a lock device according to a fourth embodiment of the present invention;

FIG. **21** is a sectional view taken along lines XXI—XXI in FIG. **20**;

FIG. **22** is a side view showing a chair according to a fifth embodiment of the present invention;

FIG. 23 is a perspective view showing the chair of FIG. 22 in an exploded state;

FIG. 24 is a plan view showing the chair with its seat removed;

FIG. 25 is a sectional view taken along lines XXV—XXV in FIG. 24;

FIG. 26 is a sectional view taken along lines XXVI—XXVI in FIG. 24;

FIG. 27 is a sectional view taken along lines XXVII—XXVII in FIG. 24;

FIG. 28 is a sectional view taken along lines XXVIII—XXVIII in FIG. 24; FIG. 29 is a sectional view taken along lines XXIX—XXIX in FIG. 24;

FIG. 30*a* is a fragmentary perspective view showing a lock device incorporated in the chair of FIG. 22;

FIG. 30*b* is a fragmentary perspective view showing a displacing mechanism incorporated in the chair of FIG. 22;

FIG. 31 is a sectional view taken along lines XXXI—XXXI in FIG. 24;

FIG. 32 is a sectional view showing a lever member incorporated in the chair of FIG. 22;

FIG. 33 is a sectional view similar to FIG. 25 but showing the same chair in its rearwardly tilted state;

FIG. 34 is a perspective view showing a lock device according to a sixth embodiment of the present invention;

FIG. 35 is a plan view showing the lock device of FIG. 34;

FIG. 36*a* is a sectional view taken along lines XXXVI—XXXVI in FIG. 35;

FIG. 36*b* is a sectional view similar to FIG. 36*a* but showing the same lock device after actuation;

FIG. 37 is a perspective view showing a lock device according to a seventh embodiment of the present invention;

FIG. 38 is a sectional view taken along lines XXXVIII—XXXVIII in FIG. 37; and

FIG. 39 is a sectional view taken along lines XXXIX—XXXIX in FIG. 38.

DETAILED DESCRIPTION OF PREFERRED EMBODIMENTS

The accompanying drawings show various embodiments of the present invention, but these embodiments are not limitative of the scope provided by the invention. Now, these embodiments are described one by one.

EMBODIMENT 1

FIGS. 1 through 16 show a rocking chair according to a first embodiment of the present invention.

As shown in FIG. 2, the rocking chair of this embodiment, which is generally designated by reference numeral 1, mainly comprises a support device 3 mounted to the upper end of a chair leg post 2, and a seat 4 mounted on the support device 3, and a seat back 5 integral with the seat 4.

As best shown in FIGS. 2 and 5, the seat 4 includes a seat front carrier plate 4*a*, a seat tail carrier plate 4*b*, and a seat cushion 4*c* attached on the respective carrier plates 4*a*, 4*b*. According to the illustrated embodiment, the respective carrier plates 4*a*, 4*b* respectively have mating serrations (FIG. 5). Both of the carrier plates 4*a*, 4*b* may be made of synthetic resin, metal or other suitable material. The cushion 4*c* may be made of rubber or other elastic material.

As also shown in FIGS. 2 and 5, the seat back 5 includes a back carrier plate 5*a* integral with the seat tail carrier plate 4*b*, and a back cushion 5*b* integral with the seat cushion 4*c*. Of course, the seat back 5 may be separably connected to the seat 4.

As shown in FIGS. 2, 3, 6 and 8, the support device 3 comprises a fixed frame 6 attached to the upper end of the chair leg post 2, and a forwardly pivotal frame 7 attached to the fixed frame 6. The fixed frame 6 is upwardly open, and has a pair of upturned side walls 6*a* and a bottom wall 6*b* (see FIG. 12). The pivotal frame 7, which is also open upwardly, has a pair of upturned side walls 7*a*, a bottom wall 7*b* (FIG. 8), an upturned front wall 7*c*, and a pair of side flanges 7*d* extending laterally outward from the respective side walls 7*a*. The side walls 7*a* of the pivotal frame 7 are connected to the side walls 6*a* of the fixed frame 6 by a pair of first horizontal pivots 8, and the bottom wall 7*b* of the pivotal frame has a tail portion 7*b*′ engaging the bottom wall 6*b* of the fixed frame 6 from below. Thus, the pivotal frame 7 is pivotable only forwardly about the first horizontal pivots 8.

As shown in FIGS. 2 and 3, the seat back 5 is connected to a tiltable member 9 which is pivotable about a pair of second pivots 10. The details of the tiltable member 9 will be described hereinafter. The pivotal movement of the tiltable member 9 is elastically controlled by a pair of tilting control springs 11.

As shown in FIGS. 6 and 8, each of the tilting control springs 11 is in the form of a torsion coil spring according to the illustrated embodiment. The coil spring 11 has a load receiving leg 11*a* and an anchoring leg 11*b* engaging against the front wall 7*c* of the pivotal frame 7.

As shown in FIGS. 2–4, the tiltable member 9 includes a base 13 made of a metal plate for example, a mechanism carrier 14 fixed on the base 13 and made of a synthetic resin for example, and a pair of generally L-shaped frame bars 15.

The base member 13 is formed with a parallel pair of upwardly open grooves 13*a* (FIG. 4), whereas the mechanism carrier 14 is formed with a pair of downward projections 14*a*′ fitted in the respective grooves 13*a* of the base. The carrier 14 is fixed to the base 13 by set screws 13′ (only one shown in FIG. 4). On the upper side of the downward projections 14*a*′ of the carrier 14 are formed a pair of elongate recesses 14*a*.

The mechanism carrier 14 has a pair of upwardly directed outer side brackets 14*b* and a pair of upwardly directed inner side brackets 14*c* (FIGS. 3, 4 and 6). The outer side brackets 14*b* are connected respectively to the side walls 7*a* of the pivotal frame 7 by the respective second pivots 10. Thus, the tiltable member 9 is pivotable about the second pivots 10 relative to the pivotal frame 7 which itself is pivotable about the first pivots 8 relative to the fixed frame 6. Each of the second pivots 10 is provided with a spacer 12 between the outer side brackets 14*b* and the side walls 7*a* (FIG. 6).

Each of the L-shaped frame bars 15 has a horizontal portion 15*a* fixed to the base 13, and the upper end of the frame bar 15 is fixed to a horizontal connecting bar 16. As shown in FIGS. 1, 3 and 5, both ends of the connecting bar 16 are provided respectively with bushes 16*a* which are open vertically. Each of the end bushes 16*a* receives a flanged cylindrical member 17 which is made of a relatively hard but slightly deformable resin. The end bush 16*a* is inserted, as slightly deformed, into a corresponding cylindrical receptacle 5*c*

of the back carrier plate **5a**, so that the seat back **5** is tiltable with the tiltable member **9**.

As shown in FIGS. **2–4**, the mechanism carrier **14** is formed with a cylindrical boss **18** which is open upwardly for receiving a guide bush **20**. The mechanism carrier **14** is further provided with a first rack guide **19** having a substantially vertical guide key **19a**.

As shown in FIGS. **2–4** and **8**, a rear support plate **21** made of synthetic resin for example is attached to the underside of the seat tail carrier plate **4b**. The rear support plate **21** is provided with a downwardly directed housing cylinder **22** which is slidably fitted, from above, in the guide bush **20**. The housing cylinder **22** accommodates a weight responsive coil spring **23** resting on the mechanism carrier **14**. Thus, the seat **4** moves downward against the weight responsive coil spring **23** by an amount which is substantially proportional to the weight of the user.

As shown in FIGS. **2–4**, **6** and **8**, the rear support plate **21** is also provided with a downwardly directed first rack **24** which forms part of an displacing mechanism. The first rack **24** is slidably fitted in the guide key **19a** of the first rack guide **19** to move substantially in the vertical direction.

The displacing mechanism also comprises a pinion assembly **25** which includes a shaft **26** rotatably supported by the outer side brackets **14b** of the mechanism carrier **14**. The shaft **26** supports a first pinion **25a** in mesh with the first rack **24** (see particularly FIGS. **6** and **10**), a pair of second pinions **25b** diametrically larger than the first pinion **25a**, and a pair of ratchet gears **25c**.

As shown in FIGS. **4**, **6**, **8** and **10**, a pair of second rack guides **28** are arranged in the respective elongate recesses **14a** of the mechanism carrier **14** in corresponding relation to the respective second pinions **25b**. Each of the second rack guides **28** has a guide key **28a** for slidably receiving a second rack **30** which has a pair of longitudinal side wings **30a**. The second rack **30** is held in mesh with a corresponding one of the second pinions **25b**. Thus, when the pinion assembly **25** rotates in response to vertical movement of the first rack **24** (i.e., the seat **4**), the second rack **30** moves back and forth along the second rack guide **28**.

In the illustrated embodiment, the displacing mechanism is mainly constituted by the first rack **24**, the pinion assembly **25** and the second racks **30**. However, it should be appreciated that the displacing mechanism may be otherwise constituted.

As shown in FIGS. **3**, **4** and **6**, a horizontal load applying pin **32** extends between and is carried by the respective second racks **30** at a position in front of the second pivots **10**. In the illustrated embodiment, the pin **32** is provided with a load applying roller **31** for contacting the load receiving legs **11a** of the respective tilting control springs **11**. However, the roller **31** may be omitted, and the pin **32** may be made to directly bear against the load receiving legs **11a** of the respective tilting control springs **11**.

As shown in FIGS. **3**, **4** and **9**, the mechanism carrier **14** is formed with an upwardly projecting stopper **29** which comes into abutment with the load applying roller **31** for preventing the second racks **30** from retreating beyond a certain limit. The stopper **29** is preferably rendered slightly higher than the roller **31**, so that a small clearance el (FIG. **9**) is formed between the load applying roller **31** and the load receiving legs **11a** of the respective tilting control springs **11** before the tiltable member **9** is rearwardly tilted. This clearance el enables the second racks **30** to move smoothly relative to the load receiving legs **11a**.

As shown in FIGS. **2**, **3**, **6** and **8**, each of the tilting control coil springs **11** is mounted on an anchor shaft **33** which extends between the respective side walls **7a** of the pivotal frame **7**. A generally semicylindrical buffer member **34**, which may be made of rubber, is inserted in the coil portion of the tilting control spring **11** with its flat face **34a** (FIGS. **3** and **8**) held in contact with the anchor shaft **33**. Thus, the coil portion of the spring **11** contracts diametrically with attendant deformation of the buffer member **34** for elastically controlling rearward tilting of the tiltable member **9**.

The bottom wall **7b** of the pivotal frame **7** has an upwardly inclined support lip **35** (FIG. **8**) for preventing the load receiving legs **11a** of the respective tilting control springs **11** from moving downward. Further, the front wall **7c** of the pivotal frame **7** is provided with a pair of adjusting screws **36** (FIGS. **6** and **8**) which contact the respective anchoring legs **11b** of the tilting control springs **11**. Thus, it is possible to adjust the initial elastic force of the springs **11** by operating the adjusting screws **36**. Indicated at **37** (FIG. **6**) is a spacer interposed between each of the springs **11** and the corresponding side wall **7a** of the pivotal frame **7** for preventing lateral displacement of the spring **11**.

As shown in FIGS. **2**, **8** and **14**, the side flanges **7d** of the pivotal frame **7** are attached to a front support plate **38** which, in turn, is attached to the underside of the seat front carrier plate **4a**. Thus, the seat **4** is supported by the pivotal frame **7** on one hand and by the tiltable member **9** (via the rear support plate **21**) on the other hand.

As shown in FIGS. **2**, **3** and **14**, a channel-shaped guide arm **39** extends rearwardly upward from the fixed frame **6**. The guide arm **39** has a pair of side walls **39a** each formed with a curved guide slot **40**.

On the other hand, a curved connecting portion **41** between the seat tail carrier plate **4b** and the back carrier plate **5a** is provided with a pair of brackets **42** (only one shown in FIGS. **2** and **14**) which extend downwardly rearward. Each of the brackets **42** carries a guide pin **43** slidably fitted in the corresponding guide slot **40** of the guide arm **39**. Thus, the seat tail carrier **4b** together with the seat back **5** is movable rearwardly downward with the guide pin **43** slidably guided by the guide slot **40**.

In FIGS. **6**, **12**, **13** and **16**, reference numeral **44** indicates a lock device which forms an important feature of the present invention. This lock mechanism functions to hold the load applying pin **32** (the second racks **30** and the load applying roller **31** as well) at an adjusted position depending on the particular weight of the user, as described below.

The lock device **44** includes the ratchet gears **25c** of the pinion assembly **25** already described. The lock device **44** further includes a pair of ratchet members **45** associated with the respective ratchet gears **25c**.

Each of the ratchet members **45** is pivotally supported on a pin **46** which is mounted to the corresponding inner side bracket **14c** of the mechanism carrier **14**. The ratchet member **45** has a pawl **45a** for releasable engagement with the corresponding ratchet gear **25c**, and an engaging recess **45b** which is open downwardly. The ratchet member **45** is always urged by a return spring **47** to bring the ratchet pawl **45a** away from the corresponding ratchet gear **25c**. The return spring **47** is fitted on the pin **46**.

The pivotal movement of the ratchet member **45** is controlled by a corresponding operational member **49** which is pivotally supported on a pin **50** fixed to the base **13**. The operational member **49** is elongate and extends through a corresponding perforation **48** of the base **13** and mechanism carrier **14**. The operational member **49** has a lower end resting on the bottom wall **6b** of the fixed frame **6**. The operational member **49** further has an upper end formed with an upwardly convex head **49a** engaging in the recess **45b** of the ratchet member **45**. The convex head **49a** is immediately followed by a rearwardly concave guide **49b**.

With the arrangement described above, when the user sits on the seat **4**, the seat tail carrier plate **4b** of the seat **4** moves downward against the weight responsive spring **23** by an amount substantially proportional to the particular weight of the user. The downward movement of the seat tail carrier plate **4b** results in corresponding downward movement of the first rack **24** engaging with the first pinion **25a**, thereby rotating the pinion assembly **25**. Such rotation of the pinion assembly **25** then causes the second racks **30** in mesh with the second pinions **25b** to advance with the load applying pin **32** (namely, the load applying roller **31**), as indicated by phantom lines in FIG. **8**. As a result, the effective length L1 (FIG. **8**) of the load receiving leg **11a** of each tilting control spring **11**, defined as the distance between the coil center of the spring **11** and the load applying pin **32**, reduces generally proportionally to the weight of the user.

In this state, if the user leans against the seat back **5**, the tiltable member **9** together with the seat back **5** and the seat tail carrier plate **4b** is tilted rearwardly downward about the second pivots **10**, as shown in FIG. **14**. As a result, the load receiving legs **11a** of the tilting control springs **11** are elastically raised upward by the load applying roller **31**, so that rearward tilting of the seat back **5** and tiltable member **9** is elastically controlled by the tilting control springs **11**.

Further, such rearward tilting of the tiltable member **9** also causes each operational member **49** to pivot in the direction of an arrow A in FIG. **12**, thereby pivoting the corresponding ratchet member **45** against the corresponding return spring **49**. Thus, the ratchet pawl **45a** engages the corresponding ratchet gear **25c** to prevent the pinion assembly **25** as a whole from reversely rotating as long as the user leans on the seat back **5**, as shown in FIG. **16**. As a result, the position of the load applying roller **31**, which has been automatically adjusted previously in accordance with the weight of the user, is held fixed relative to the load receiving legs **11a** of the respective tilting control springs **11**.

It should be appreciated that, due to the provision of the convex head **49a** and the concave guide **49b**, the operational member **49** is capable of pivoting further in the arrow A direction (FIG. **12**) while maintaining engagement between the ratchet pawl **45a** and the ratchet gear **25c**, as indicated by phantom lines in FIG. **16**. Thus, the tiltable member **9** can tilt further rearwardly downward even after the ratchet pawl **49a** engages the ratchet gear **25c**, so that the provision of the lock device **44** does not hinder the rearward pivotal movement of the tiltable member **9** (namely, the seat back **5**).

In the illustrated embodiment, the supportive force provided by each tilting control spring **11** is automatically adjusted to suit the weight of the user because the load applying pin **32** (namely, the load applying roller **31**) is displaced relative to the load receiving leg **11a** of the spring **11** proportionally to the weight of the user. Such adjustment of the supportive force is realizable for the following reasons.

First, the effective length L1 (FIG. **8**) of the tilting control spring **11** reduces progressively as the weight of the user increases, whereas the degree of spring torsion per unit vertical displacement of the load applying pin **32** increases progressively as the effective length L1 reduces. Thus, the tilting control spring **11** provides a larger supportive force for a heavier user than for a lighter user.

Secondly, the pivotal arm length L2 (FIG. **8**) of the load applying pin **32**, which is defined as the distance between the load applying pin **32** and the second pivots **10**, increases progressively as the weight of the user increases, while the vertical displacement of the load applying pin **32** per unit pivotal angle of the tiltable member **9** increases progressively as the pivotal arm length L2 increases. Further, the torsioning degree of the tilting control spring **11** increases progressively as the vertical displacement of the load applying pin **32** increases. Thus, the spring **11** reacts more strongly for a heavier user than for a lighter user.

In the third place, the pivotal arm length L3 (FIGS. **8** and **14**) of the seat back **5**, which is defined as the distance between the seat back **5** and the second pivots **10**, is always constant, whereas the pivotal arm length L2 of the load applying pin **32** increases progressively as the weight of the user increases. Further, according to the force balance rule of leverage, when the pivotal arm length L2 of the load applying pin **32** increases, the tilting control spring **11** need only to apply a smaller reaction force to balance with a given weight or force applied to the seat back **5**. Thus, the spring **11** can be considered to become stronger for a heavier user than for a lighter user although the spring constant of the spring **11** itself does not change.

For all of the above reasons, the tilting control spring **11** can provide a uniformly comfortable tilting feel to any user by automatic displacement of the load applying pin **32** which is dependent on the particular user's weight.

Further, as already described, the second pinions **25b** in mesh with the second racks **30** are diametrically larger than the first pinion **25a** in mesh with the first rack **24**, but both kinds of pinions **25a**, **25b** are mounted on the common shaft **26** for simultaneous rotation. Thus, the advancing stroke of the second racks **30** with the load applying pin **32** can be rendered larger than the downward stroke of the first rack **24**. As a result, it is possible to increase the sensitivity in automatically adjusting the supportive force of the tilting control springs **11** against tilting of the tiltable member **9** (namely, the seat back **5**).

More importantly, the lock device **44** functions to hold the load applying pin **32** at an initially adjusted position immediately when the user leans against the seat back **5**. Thus, the supportive force or ability provided by the tilting control springs **11** can be fixed to suit the particular user's weight as long as the user leans on the seat back **5**.

On the other hand, when the user assumes a non-reclining posture again, the pawls **45a** of the respective ratchet members **45** pivotally return to their original state under the action of the return springs **47**. Thus, the respective ratchet gears **25c** are again free to rotate.

As shown in FIGS. 7–9 and 12, the base 13 of the pivotal member 9 is provided with a downwardly extending stopper segment 55 which is L-shaped as viewed laterally and has a pair of engaging lips 55*a* spaced by a cutout 55*b*. The engaging lips 55*a* are made to engage the underside of the fixed frame 6 from below for preventing the tiltable member 9 from pivoting forwardly downward beyond a certain limit. The cutout 55*b* of the stopper segment 55 serves to allow rearwardly downward pivotal movement of the tiltable member 9 in relation to the chair leg post 2.

In the illustrated embodiment, the rocking chair 1 (FIG. 1) further incorporates a rocking guide mechanism 56, as shown FIGS. 7 and 10–12. This rocking guide mechanism 56 connects between the fixed frame 6 and the tiltable member 9.

The rocking guide mechanism 56 comprises two pairs of guide brackets 58 fixed to the bottom wall 6*b* of the fixed frame 6 to extend downwardly through corresponding side openings 57 formed in the bottom wall 7*b* of the pivotal frame 7 (see particularly FIG. 7). Each of the guide brackets 58 has a guide slot 61 which includes a substantially horizontal portion 61*a* and an inclined portion 61*b*. The horizontal slot portion 61*a* generally follows an arc about the second pivots 10, whereas the inclined slot portion 61*b* generally follows an arc about the first pivots 8.

The rocking guide mechanism 56 further comprises another pair of brackets 59 extending downwardly from the mechanism carrier 14 also through the corresponding openings 57 of the pivotal frame 7. Each of the brackets 59 carries a guide pin 60 slidably fitting in the respective guide slots 61 of the corresponding pair of guide brackets 58.

As already described, the pivotal frame 7 is pivotable about the first pivots 8 which are mounted on the fixed frame 6, whereas the tiltable member 9 is pivotable about the second pivots 10. Further, since the second pivots 10 are mounted on the pivotal frame 7 which itself is pivotable about the first pivots 8, the tiltable member 9 is also pivotable about the first pivots 8. Thus, if no countermeasure is taken, the tiltable member 9, which has been tilted rearwardly downward by the reclining posture of the user, may pivot upward about the first pivots 8 (instead of the second pivots 10) together with the pivotal frame 7 which itself pivots forwardly downward about the first pivots 8. In this case, the tilting control springs 11 do not act against the tiltable member 9 because the relative position between the pivotal frame 7 and the tiltable member 9 does not change at the time of commonly pivoting about the first pivots 8, consequently failing to elastically control rocking movement of the seat back 5.

However, with the rocking guide mechanism 56, when the tiltable member 9 pivots rearwardly downward about the second pivots 10, each guide pin 60 carried by the corresponding bracket 59 (namely, the tiltable member 9) shifts deeper into the horizontal portion 61*a* of the corresponding guide slot 61, as indicated by phantom lines in FIG. 12. Since the horizontal slot portion 61*a* generally follows an arc only about the second pivots 10, the tiltable member 9 thus rearwardly pivoted can pivot back only about the second pivots 10. In other words, the tiltable member 9, which has been previously pivoted rearwardly downward, cannot pivot back commonly with the pivotal frame 7 about the first pivots 8. Therefore, the rocking movement of the tiltable member 9 (namely, the seat back 5) occurs always under the influences of the tilting control springs 11.

On the other hand, once the tiltable member 9 pivotally returns to the initial normal position (FIG. 1), each guide pin 60 assumes a solid line position of FIG. 12 for entry into the inclined portion 61*b* of the corresponding guide slot 61. In this state, the tiltable member 9 can now pivot forwardly upward with the pivotal frame 7 (which itself pivots forwardly downward) commonly about the first pivots 8.

Further, in the illustrated embodiment, the support device 3 is provided with a pair of V-shaped links 62, as shown in FIGS. 2, 7, 8, 10, 11 and 14. Specifically, the bottom wall 7*b* of the pivotal frame 7 is formed with a central perforation 63, and the pair of V-shaped links 62 are arranged at the central perforation 63 with their V-apexes directed rearward. The V-apexes of the respective links 62 are pivotally connected to a pair of brackets 64 by means of a common pin 65, and the brackets 64 are attached to the fixed frame 6. The respective links 62 have their downwardly directed legs pivotally connected, via another common pin 67, to another pair of brackets 66 fixed to the bottom wall 7*b* of the pivotal frame 7. The pin 67 has a central collar 67*a* serving as a spacer between the links 62. Further, the respective links have their upwardly directed legs bearing, from below, against the base 13 of the tiltable member 9 at a position ahead of the second pivots 10.

Obviously, the links 62 do not hinder rearward pivotal movement of the tiltable member 9 because the upwardly directed legs of the links 62 bear the tiltable member 9 only from below. Such rearward pivotal movement of the tiltable member 9 causes torsioning of the tilting control springs 11 because the pivotal frame 7 is prevented from pivoting upward beyond the horizontal position (FIGS. 2 and 8) by the engagement between the fixed frame 6 and the pivotal frame 7.

On the other hand, when the pivotal frame 7 pivots forwardly downward about the first pivots 8, the tiltable frame 9 also pivots forwardly about the first pivots 8 within a limited angular range B allowed by the stopper segment 55 engageable with the fixed frame 6, as schematically shown in FIG. 15. In this case, the tilting control springs 11 moves downward with the pivotal frame 7 by an amount h1, whereas the links 62 pivotally move downward with the tiltable member 9 by a smaller amount h2. Thus, the tilting control springs 11 are torsioned by a degree determined by the difference between h1 and h2 because the load applying roller 31 also moves with the links 62 and the tiltable member 9.

Due to the provision of the links 62, the tilting control springs 11 can also function to elastically control forward tilting of the pivotal frame 7 (namely, the seat front carrier plate 4*a*) in addition to elastically controlling rearward tilting of the tiltable member 9. If the links 62 are not provided, the pivotal frame 7 pivots forwardly downward about the first pivots 8 together with the tiltable member 9 without torsional deformation of the tilting control springs 11. Thus, the links 62 are significant in ensuring that the pivotal frame 7 is forwardly pivoted to a greater degree than the tiltable member 9, thereby torsioning the tilting control springs 11.

Further, due to the provision of the links 62, the supportive force of the tilting control springs 11 is stronger when the tiltable member 9 is pivoted rearwardly downward than when the pivotal frame 7 is pivoted forwardly downward. This point is very signifi-

cant since rearward pivoting is more forceful due to leaning of the user's back against the seat back **5** whose arm length L3 (FIG. **14**) is relatively large.

Specifically, when the tiltable member **9** is pivoted rearwardly downward, the tilting control springs **11** are torsioned as much as the tiltable member **9** is pivoted because the pivotal frame **7** is prevented from pivoting upward by the engagement between the pivotal frame **7** and the fixed frame **6**. When the pivotal frame **7** is pivoted forwardly downward, on the other hand, the tilting control springs **11** are torsioned only by an amount corresponding to the difference between h1 and h2 (FIG. **15**) because the tiltable member **9** also pivots forwardly (by a smaller amount), as already described. Thus, the same tilting control springs **11** can provide two different supportive forces suitable for elastically controlling the tilting movement of the seat **4** in both directions.

The stopper segment **55** prevents the tiltable member **9** from pivoting forwardly beyond the angular range B. After this situation is reached, the pivotal frame **7** alone can pivot forwardly downward, so that the tilting control springs **11** continues to be further torsioned.

EMBODIMENT 2

FIG. **17** shows a principal portion of a chair according to a second embodiment of the present invention. The chair of this embodiment differs from that of the first embodiment only in that it incorporates a modified lock device **44'**.

Specifically, the modified lock device **44'** includes a pair of ratchet members **45'** (only one shown) cooperative with a corresponding pair of ratchet gears **25c**. Each of the ratchet members **45'** is pivotally supported on a pin **46'** mounted on the **5** fixed frame **6**.

Each ratchet member **45'** has a first leg **45c'** extending upwardly through a corresponding perforation **48** of the base **13** and mechanism carrier **14**, and a second leg **45d'** extending generally horizontally. The first leg **45c'** is formed, at its upper end, with a pawl **45a'** for releasable engagement with the corresponding ratchet gear **25c**. The second leg **45d'** is always biased upward by a compression coil spring **69** arranged under the second leg **45d'**. Further, the second leg **45d'** bears, from below, against a leaf spring **68** attached to the base **13**. The leaf spring **68** is stronger than the compression coil spring **69**.

With the modified lock device **44'**, when the tiltable member **9** pivots rearwardly, the leaf spring **68** depresses the second leg **45d'** of the ratchet member **45'**, so that the pawl **45a'** comes into locking engagement with the corresponding ratchet gear **25c**. Conversely, when the tiltable member **9** pivotally returns to its original position, the compression coil spring **69** causes the ratchet member **45'** to pivot reversely, thereby liberating the ratchet gear **25c**.

EMBODIMENT 3

FIGS. **18** and **19** show a principal portion of a rocking chair according to a third embodiment of the present invention. The rocking chair of this embodiment also differs from that of the first embodiment only in that it incorporates another modified lock device **44''** which is designed to act immediately when the user sits.

Again, the modified lock device **44''** of the third embodiment includes a pair of ratchet members **45''** (only one shown) cooperative with a corresponding pair of ratchet gears **25c**. Each of the ratchet members **45''** is arranged between the corresponding outer and inner side brackets **14b**, **14c** of the mechanism carrier **14**, and connected to a lever **73** by means of a guide pin **70**.

Each ratchet member **45''** is elongate and has a pawl **45a''** for releasable engagement with the corresponding ratchet gear **25c**. The ratchet member **45''** is provided, on both sides thereof, with a pair of guide projections **45e''** extending transversely of the elongate ratchet member **45''**. The guide projections **45e''** are held in sliding contact with respective guide rails **72** formed on the outer and inner side brackets **14b**, **14c**. Further, the outer and inner side brackets **14b**, **14c** are formed with guide slots **71** extending in parallel to the guide rails **72**, and the guide pin **70** is slidably received in the guide slots **71**. Thus, the ratchet member **45''** is slidably movable toward and away from the corresponding ratchet gear **25c**.

The lever **73** is pivotally supported on a pin **74** extending between the outer and inner side brackets **14b**, **14c** of the mechanism carrier **14**. The lever **73** has a front end which is bifurcated to provide a pair of legs **73a** located on both sides of the corresponding ratchet member **45''**. Each of the legs **73a** is formed with a play slot **75** which extends transversely of the guide slots **71** and is penetrated by the guide pin **70**. The play slot **75** allows pivotal movement of the lever **73**.

Behind the pin **74**, the lever **73** is biased downward by a compression coil spring **76**. Ahead of the pin **74**, the lever **73** is urged downward by a tension coil spring **77**. Thus, these two kinds of springs **76**, **77** act in the counteracting directions, and the lever **73** is normally held in the position shown in FIG. **18**. Indicated by reference numeral **78** is a leaf spring **78** for supporting the ratchet member **45''** in its lower limit position.

According to the third embodiment, the orientation of the ratchet member **45''** and the shape of the ratchet pawl **45a''** are selected so that the ratchet gear **25c** is allowed to rotate in the direction of an arrow B (which is the rotational direction for advancing the second racks) even if the ratchet pawl **45a''** engages with the ratchet gear **25c**. On the other hand, the ratchet gear **25c** is prevented from rotating reversely when the ratchet pawl **45a''** engages with the ratchet gear **25c**.

In operation, when the rear support plate **21** is depressed by a sitting action of the user, the lever **73** is pressed by the compression spring **76** and pivots in the direction of an arrow C. Such pivotal movement of the lever **73** causes the ratchet member **45''** to translationally move toward the corresponding ratchet gear **25c**, so that the ratchet pawl **45a''** comes into engagement with the ratchet gear **25c**. However, as described above, the ratchet gear **25c** continues to rotate in the arrow B direction while the ratchet member **45''** moves back and forth within a slight range. On the other hand, the ratchet gear **25c** is prevented from rotating reversely, thereby holding the second racks (not shown) at an adjusted position.

When the rear support plate **21** moves upward upon removal of the use's weight, the lever **73** is pivotally returned to its original position under the action of the tension spring **77**. As a result, the ratchet pawl **45a''** disengages from the ratchet gear **25c** which is therefore freed to rotate reversely.

EMBODIMENT 4

FIGS. **20** and **21** show a principal portion of a rocking chair according to a fourth embodiment of the present invention. The rocking chair of this embodiment

also differs from that of the first embodiment only in that it incorporates a further modified lock device **44''** which is designed to act immediately when the user sits.

Again, the modified lock device **44'''** of the fourth embodiment includes a pair of ratchet members **45'''** (only one shown) cooperative with a corresponding pair of ratchet Gears **25c**. Each of the ratchet members **45'''** is pivotally supported on a pin **79** extending between the corresponding outer and inner side brackets **14b**, **14c** of the mechanism carrier **14**.

Each ratchet member **45'''** is elongate and has a pawl **45a'''** for releasable engagement with the corresponding ratchet Gear **25c**. Similarly to the third embodiment, the orientation of the ratchet member **45'''** and the shape of the ratchet pawl **45a'''** are selected so that the ratchet gear **25c** is allowed to rotate in the direction of an arrow B (which is the rotational direction for advancing the second racks) even if the ratchet pawl **45a'''** engages with the ratchet gear **25c**. On the other hand, the ratchet gear **25c** is prevented from rotating reversely when the ratchet pawl **45a'''** engages with the ratchet gear **25c**.

The ratchet member **45'''** is always urged in the direction away from the ratchet gear **25c** by a return coil spring **80** fitted on the pin **79**. Further, the ratchet member **45'''** carries a leaf spring **81** bearing against the rear support plate **21** from below. The pivotal movement of the ratchet member **45'''** is limited in both directions by stoppers **82**, **83**.

In operation, when the rear support plate **21** is depressed by a sitting action of the user, the leaf spring **81** is pressed downward, thereby causing the ratchet member **45'''** to pivot toward the corresponding ratchet gear **25c**. As a result, the ratchet pawl **45a'''** comes into engagement with the ratchet gear **25c**, but the ratchet gear **25c** continues to rotate in the arrow B direction while the ratchet member **45''** moves back and forth within a slight range. On the other hand, the ratchet gear **25c** is prevented from rotating reversely, thereby holding the second racks (not shown) at an adjusted position.

When the rear support plate **21** moves upward upon removal of the use's weight, the ratchet member **45'''** is pivotally returned to its original position under the action of the return spring **80**. As a result, the ratchet pawl **45a'''** disengages from the ratchet gear **25c** which is therefore freed to rotate reversely.

In any of the four embodiments described above, use is made of the lock device **44**, **44'**, **44''** **44'''** wherein the ratchet gears **25c** are incorporated in the pinion assembly **25**. However, the lock mechanism may comprise a ratchet rack movable with each of the second racks **30**, and a ratchet pawl member carried by the mechanism carrier **14** for releasable engagement with the ratchet rack. Alternatively, the lock mechanism may comprise a ratchet rack fixed on the mechanism carrier **14**, and a ratchet pawl member carried by the pinion assembly **25** for releasable engagement with the fixed ratchet rack.

EMBODIMENT 5

FIGS. **22** through **33** show a chair according to a fifth embodiment of the present invention.

The chair of this embodiment, which is generally designated by reference numeral **101**, comprises a support device **103** mounted to the upper end of a chair leg post **102**, a seat **104** mounted on the support device **103**, and a seat back **106** separate from the seat **104** and connected to the support device **103** by means of a tiltable member **105**, as shown in FIG. **22**.

The seat **104** includes a seat front carrier plate **104a**, a seat tail carrier plate **104b**, and a seat cushion **104c** attached on the respective carrier plates **104a**, **104b**. The seat back **106** includes a back carrier plate **106a** attached to the tiltable member **105**, and a back cushion **106b** covering the back carrier plate **106a**.

As shown in FIGS. **22–25**, the support device **103** comprises a fixed frame **107** fixed to the upper end of the chair leg post **102**, and a forwardly pivotal frame **108** attached to the fixed frame **107**. The fixed frame **107** is upwardly open, and has a pair of upturned side walls **107a** and an upturned front wall **107b**. The pivotal frame **108**, which is also open upwardly, has a pair of upturned side walls **108a** and a generally horizontal front support plate **108b** attached on the respective side walls **108a**. The side walls **108a** of the pivotal frame **108** are pivotally connected to the respective side walls **107a** of the fixed frame **107** by a first horizontal pivot **109** extending laterally of the chair. The front support plate **108b** of the pivotal frame **108** is attached to the underside of the seat front carrier plate **104a**.

As shown in FIGS. **22–24** and **28**, each side wall **107a** of the fixed frame **107** is provided, at a position ahead of the first pivot **109**, with a laterally projecting first bracket **110**. Similarly, each side wall **108a** of the pivotal frame **108** is provided with a laterally projecting second bracket **111** corresponding to the first bracket **110**. A bolt **14** having a flange **103** penetrates through the first bracket **110** and fixed to the second bracket **111**. A forward tilting control spring **112** is interposed between the bolt flange **113** and the first bracket **110**. Thus, the pivotal frame **108** together with the seat front carrier plate **104a** is pivotable forwardly downward about the first pivot **109** against the forward tilting control spring **112**.

As shown in FIGS. **22–25**, **28** and **29**, the tiltable member **105** includes a pair of generally L-shaped frame bars **116** having their respective lower end portions connected together by a base **117**. A mechanism carrier **118** having a pair of upturned side flanges **118a** is fixed on the base by screwing or welding for example. The side flanges **118a** of the mechanism carrier **118** are pivotally connected to the side walls **107a** of the fixed frame **107** by means of a second horizontal pivot **119**. Thus, the tiltable member **105** is pivotable rearwardly downward about the second pivot **119**. Indicated at **119a** is a cylindrical collar fitted on the second pivot **119**.

Each side flange **118a** of the mechanism carrier **118** is formed with a guide hole **120** which is penetrated by the first pivot **109**. As shown in FIGS. **25** and **26**, the guide hole **120** is elongated in such a direction as to allow the tiltable member **105** to pivot rearwardly downward about the second pivot **119** in spite of the presence of the first pivot **109**. Further, as shown in FIGS. **22** and **25**, the base **117** is engageable, from above, with the fixed frame **107** at a position ahead of the second pivot **119**. Thus, the tiltable member **105** is prevented from pivoting forwardly upward beyond its normal position indicated in solid lines in FIG. **22**.

As shown in FIGS. **23**, **25**, **28**, **29**, **30a** and **30b**, the mechanism carrier **118** is provided with a pair of guide steps **121** adjacent to the respective side flanges **118a**. A slider **122** is slidably mounted on the mechanism carrier **118** between the respective guide steps **121**. The slider **122**, which may be made of synthetic resin, has a pair of front projections **122a** for carrying a load applying pin **124** provided with a load applying roller **123** (see partic-

ularly FIGS. 25 and 28). The load applying roller 123 may be omitted if desired.

As shown in FIGS. 23–25 and 27, a lever member 125 is arranged near the base 117 of the tiltable member 105 for engagement with the load applying roller 123 from above. The lever member 125 has a pair of laterally spaced front legs 125*a* extending forwardly downward for pivotal connection to the side walls 107*a* of the fixed frame 107 by means of third pivots 126. Thus, the lever member 125 is pivotable forwardly upward about the third pivots 126. Each of the third pivots 126 may be surrounded by a cylindrical collar 126*a*.

The lever member 125 carries, at an intermediate upper portion, a pin 128 extending between the respective front legs 125*a*, and the pin 128 supports a spring seat 127. A rearward tilting control spring 129, which is in the form of a compression coil spring, is interposed between the spring seat 127 and the front wall 107*b* of the fixed frame 107. Preferably, each of the frame front wall 107*b* and spring seat 127 is provided with an anchor projection 130 for preventing accidental displacement of the tilting control spring 129 (FIGS. 24 and 25).

Further, as shown in FIGS. 25 and 32, the lever member 125 has a rear strut 125*b* which projects downwardly to normally rest on the bottom wall of the mechanism carrier 118. In this normal state, a small clearance el' (FIG. 32) is formed between the load applying roller 123 and the lever member 125. Thus, the slider 122 together with the load applying roller 123 (namely, the load applying pin 124) is smoothly movable relative to the lever member 125 for supportive force adjustment.

As shown in FIGS. 23, 25, 26 and 31, a pair of guide members 133 are attached to the underside of the seat tail carrier plate 104*b*, and a rear support plate 132 is slidably supported between the pair of guide members 133. A pair of link members 134 are arranged between the rear support plate 132 and the slider 122. These link members 134 together with the slider 122 forms part of a displacing mechanism.

Each of the link members 134 comprises a pair of bent side links 135 integrally connected together by a connecting bar 137. The respective side links 135 are pivotally supported, at their intermediate bent portions, on the side flanges 118*a* of the mechanism carrier 118 by means of a pivot shaft 138. Further, the lower free ends of the respective side links 135 carry a first engaging pin 136 extending therebetween, whereas the upper free ends of the respective side links 135 carry a second engaging pin 139. The first engaging pin 136 is caught in a corresponding engaging groove 142 formed in the slider 122 (FIGS. 25, 26 and 30*b*).

On the other hand, the underside of the rear support plate 132 is provided with two pairs of downwardly directed engaging projections 140 in corresponding relation to the respective link members 134. Each of the engaging projections 140 is formed with a forwardly open cutout 141 (FIGS. 26 and 30*b*) for engagement with the corresponding second engaging pin 139.

As shown in FIGS. 22–24 and 31, each side flange 118*a* of the mechanism carrier 118 is provided with a third bracket 143 projecting laterally outward for supporting a weight responsive spring 144. The weight responsive spring 144, which is in the form of a compression coil spring, penetrates through a corresponding opening 145 of the rear support plate 132 and abuts against the underside of the seat tail carrier plate 104*b*. Thus, the seat tail carrier plate 104*b* together with the rear support plate 132 moves downward against the weight responsive spring 144 when the user sits on the seat 104.

As shown in FIGS. 23–25 and 30*a*, a lock member 146 is supported on the second pivot 119. The lock member 146 has a rear end formed with a catch recess 146*a* which receives the first pivot 109, so that the lock member 146 is prevented from pivoting about the second pivot 119. Further, the lock member 146 has a front end provided with a downwardly directed friction member 147 for frictional engagement with the slider 122. The friction member 147 may be made of an elastic material such as urethane rubber.

Normally, a small clearance e2 (FIG. 25) is formed between the slider 122 and the friction member 147, so that the slider 122 can smoothly move back and forth for supportive force adjustment. However, if the tiltable member 105 pivots rearwardly downward by a small amount, the friction member 147 immediately comes into frictional engagement with the slider 122 to hold it locked.

In the arrangement shown in FIG. 22, the seat tail carrier plate 104*b* is supported by the tiltable member 105 behind the second pivot 119. Thus, when the user simply sits on the seat 104, a moment is inevitably generated to pivot the tiltable member 105 rearwardly downward, which may result in premature engagement between the slider 122 and the friction member 147. To prevent such a problem, the rearward tilting control spring 129 is pre-compressed in the normal position of FIG. 22 to a degree enough to prevent, indirectly via the lever member 125, the tiltable member 105 from pivoting rearwardly downward upon a simple sitting action of the user.

In operation, when the user sits on the seat 104, the seat tail carrier plate 104*b* together with the rear support plate 132 moves downward against the weight responsive springs 144 while slightly tilting rearwardly downward. Such downward movement of the rear support plate 132 causes each of the link members 134 to pivot about the corresponding pivot shaft 138 in the direction of an arrow D in FIG. 25. As a result, the slider 122 together with the load applying pin 124 (namely, the load applying roller 123) advances to the position indicated by phantom lines in FIG. 25, and the amount of such an advancing stroke is generally proportional to the particular weight of the user. It should be appreciated that the slidability of the rear support plate 132 relative to the guide members 133 insures smooth movement of the link member 134 and slider 122.

In this state, if the user reclines on the seat back 106, a sufficient downward moment is generated to pivot the tiltable member 9 rearwardly downward about the second pivot 119 against the rearward tilting control spring 129, as indicated by phantom lines in FIG. 22. Such pivotal movement of the tiltable member 9 causes the slider 122 to come into frictional engagement with the friction member 147, as shown in FIG. 33. As a result, the slider 122 together with the load applying pin 124 (the load applying roller 123) is locked at a previously adjusted or displaced position while the tiltable member 105 is allowed to further pivot rearwardly downward by elastic deformation of the friction member 147.

As described above, the load applying pin 124 (the load applying roller 123) advances proportionally to the particular weight of the user. Thus, the effective arm length Li' (FIG. 32) of the lever member 125, which is

defined as the distance between the third pivot **126** and the load applying pin **124**, reduces progressively as the weight of the user increases. As a result, the rearward tilting control spring **129** reacts more strongly for a heavier user than for a lighter user.

When the user inclines the torso forwardly or otherwise shifts the weight forwardly, the seat front carrier plate **104***a* moves downward together with the pivotal frame **108** while tilting forwardly downward. Such forward tilting of the seat front carrier plate **104***a* is elastically controlled by the forward tilting control springs **112**, as described already.

In the fifth embodiment shown in FIGS. **22–33**, the lock device or member **146** is made to act on the slider **122** for holding it at an automatically adjusted position. However, a different lock device may be provided which acts on a different component (e.g. each link member **134**) of the displacing mechanism for indirectly holding the slider **122**.

EMBODIMENT 6

FIGS. **34** through **36***b* show a principal portion of a chair according to a sixth embodiment of the present invention. The chair of this embodiment differs from that of the fifth embodiment only in that use is made of a modified lock device.

Specifically, the modified lock device of the sixth embodiment comprises only a pair of friction members **148** mounted on the load applying pin **124** for direct contact with the lever member **125**. Each of the friction members **148** may be made of an elastic material such as urethane rubber. Preferably, the friction member **148** is rectangular in cross section to provide a flat contact surface.

Normally, the respective friction members **148** are slightly spaced from the lever member **125**, as shown in FIG. **36***a*. In this normal state, the slider **122** together with the load applying pin **124** and the friction members **148** can advance smoothly relative to the lever member **125** for automatic supportive force adjustment.

On the other hand, when the tiltable member **105** pivots rearwardly, the friction members **148** together with the load applying pin **124** move upward to come into face-to-face frictional contact with the lever member **125**, as shown in FIG. **36***b*. In this state, the slider **122** together with the load applying pin **124** and the friction members **148** is locked at an previously adjusted position. Because of the rectangular cross section, a corner portion **148***a* of each friction member **148** is compressively deformed in the locking state.

EMBODIMENT 7

FIGS. **37–39** show a principal portion of a chair according to a seventh embodiment of the present invention. The chair of this embodiment also differs from that of the fifth embodiment only in that use is made of another modified lock device.

Specifically, the modified lock device of the seventh embodiment comprises only a pair of lateral friction members **149** mounted directly on a slightly modified slider **122'**. The slider **122'** has a pair of front projections **122***a'* connected together by a load applying bridge **122***b'* which is followed by a perforation **122***c'*. The lateral friction members **149** are mounted on the load applying bridge **122***b'* respectively adjacent to the front projections **122***a'*. The respective friction members **149** have contact surfaces **149***a* which are inclined to approach each other downwardly.

In the seventh embodiment, use is also made of a slightly modified lever member **125'** for contact with the load applying bridge **122***b'* from above. The lever member **125'** has a rear strut **125***b'* located in the perforation **122***c'* of the slider **122'** behind the load applying bridge **122***b'*. The lever member **125'** is trapezoidal in cross section, as shown in FIG. **39**.

Normally, the rear strut **125***b'* of the lever member **125'** rest directly on the tiltable member **105**, so that the load applying bridge **122***b'* is slightly spaced from the lever member **125'**, as shown in FIGS. **38** and **39**. Further, the contact surfaces **149***a* of the respective friction members **149** are also spaced slightly from the lever member **125'**, as shown in FIG. **39**. Thus, in this normal state, the slider **122'** together with the load applying bridge **122***b'* and the friction members **149** can advance smoothly relative to the lever member **125'** for automatic supportive force adjustment.

On the other hand, when the tiltable member **105** pivots rearwardly, the friction members **149** move upward to come into face-to-face frictional contact with the lever member **125'** because the lever member **125'** enters deeper between the respective friction members **149**. In this state, the slider **122'** is frictionally locked at an previously adjusted position.

The seventh embodiment may be modified to include a friction member **150** (indicated in phantom lines in FIG. **39**) attached to the lever member **125'** in place of or in addition to the lateral friction members **149**.

According to the third and fourth embodiments (FIGS. **18–21**) described above, the lock device is actuated when the user sits on the seat, and subsequent rearward tilting of the seat back has nothing to do with the operation of the lock device. Thus, this type of lock device is advantageous in that it provides immediate adjustment of the supportive force with respect to the tilting control springs. However, if the user sits vigorously on the seat, the load applying position temporarily advances to an excessive extent with no possibility of reversing the lock device (as long as the user sits), thus failing to provide an accurate adjustment.

According to the first, second and fifth-seventh embodiments, on the other hand, the lock device is actuated only by rearward pivoting of the seat back. This type of lock device is advantageous in that locking occurs only after the actual weight of the user balances with the reaction force of the weight responsive spring or springs, so that the supportive force adjustment is always reliable.

The present invention being thus described, it is obvious that the same may be varied in many other ways. For instance, the ratchet or friction type lock device may be replaced by a clamping type lock device or other suitable lock device. Further, the entirety of the tilting control spring or springs may be rendered movable relative to the tiltable member in response to the weight of the user, as disclosed in European Patent Application Laid-open No. 0435297. Such variations are not to be regarded as a departure from the spirit and scope of the invention, and all such modifications as would be obvious to those skilled in the art are intended to be included within the scope of the following claims.

We claim:

1. A tilting control assembly for a chair, the chair comprising: support means; a seat supported above the support means; and a seat back arranged behind the seat to tilt rearwardly with a tiltable member which is pivot-

ally connected to the support means; the tilting control assembly comprising:

tilting control spring means for elastically supporting the seat back against rearward tilting thereof via load applying means; and displacing means responsive to a downward load applied to the seat for causing relative displacement between the tilting control spring means and the load applying means in a manner such that the tilting control spring means provides a progressively larger supportive force as the downward load increases; and

lock means for preventing reverse relative movement between the tilting control spring means and the load applying means at least while the seat back is rearwardly tilted;

wherein the lock means comprises ratchet gear means mounted on the tiltable member for rotation in response to the relative movement between the tilting control spring means and the load applying means, and ratchet pawl means releasably engageable with the ratchet gear means.

2. The tilting control assembly according to claim **1**, wherein the displacing means comprises: first rack means movable with the seat; a pinion assembly carried by the tiltable member in mesh with the first rack means, the pinion assembly supporting the ratchet gear means for rotation therewith; and second rack means slidably mounted on the tiltable member in mesh with the pinion assembly, the second rack means carrying the load applying means.

3. The tilting control assembly control to claim **2**, wherein the ratchet pawl means engages with the ratchet gear means only when the seat back is rearwardly tilted with the tiltable member.

4. The tilting control assembly according to claim **2**, wherein the ratchet pawl means engages with the ratchet gear means when the seat moves downward under the downward load, the ratchet pawl means in engagement with the ratchet gear means allowing rotation of the ratchet gear means in one direction while prohibiting reverse rotation of the ratchet gear means.

5. A tilting control assembly for a chair, the chair comprising: support means; a seat supported above the support means; and seat back arranged behind the seat to tilt rearwardly with a tiltable member which is connected to the support means to pivot about a pivotal axis; the tilting control assembly comprising:

tilting control spring means for elastically supporting the seat back against rearward tilting thereof via load applying means; and displacing means responsive to a downward load applied to the seat for causing relative displacement between the tilting control spring means and the load applying means in a manner such that the tilting control spring means provides a progressively larger supportive force as the downward load increases; and

lock means for preventing reverse relative movement between the tilting control spring means and the load applying means at least while the seat back is rearwardly tilted;

wherein the displacing means comprises a slider slidably mounted on the tiltable member for carrying the load applying means, the slider being pivotally moveable with the tiltable member about the pivotal axis;

wherein the lock means comprises friction means which applies a frictional locking force to the slider only when the seat back is tilted rearwardly with the tiltable member.

6. The tilting control assembly according to claim **5**, wherein the friction means comprises an elastic member which is deformable for frictional engagement with the slider while also allowing further rearward tilting of the tiltable member even after frictional engagement with the slider.

7. The tilting control assembly according to claim **6**, wherein the elastic member as the friction means is mounted to a lock member fixedly supported by the support means.

8. The tilting control assembly according to claim **6**, wherein the elastic member as the friction means is carried by the load applying means.

9. The tilting control assembly according to claim **6**, wherein the elastic member as the friction member is carried by the slider.

10. The tilting control assembly according to claim **6**, wherein the load applying means acts on the tilting control spring means via a lever member, the elastic member as the friction means being carried by the lever member for contact with the load applying means.

* * * * *