UNITED STATES PATENT AND TRADEMARK OFFICE

BEFORE THE PATENT TRIAL AND APPEAL BOARD

MILLERKNOLL, INC.,
Petitioner,

v.

AARON DEJULE AND SCOTT PADIAK,
Patent Owners.

Patent No. 10,292,498
Filing Date: February 10, 2016
Issue Date: May 21, 2019

Title: APPARATUS WITH WEIGHT RESPONSIVE CHANGEABLE ADJUSTING CHARACTERISTICS

Inter Partes Review No.: IPR2023-01428

PETITION FOR *INTER PARTES* REVIEW UNDER 35 U.S.C. §§ 311-319 AND 37 C.F.R. § 42.100 *et seq.*

TABLE OF CONTENTS

Page

I. MANDATORY NOTICES 1

A. Real Parties in Interest & Related Matters 1

B. Lead & Back-Up Counsel, Service Information 1

II. GROUNDS FOR STANDING & FEE PAYMENT 2

III. OVERVIEW OF THE ’498 PATENT 3

A. Brief Description 3

B. Prosecution History of the ’498 Patent 6

IV. IDENTIFICATION OF CHALLENGE AND RELIEF REQUESTED 7

A. Claims Challenged and Grounds for Challenge 7

B. Level of Skill in the Art and How the Challenged Claims Are to Be Construed 8

1. Level of Skill in the Art 8

2. How the Claims Are to Be Construed 8

3. Claim Construction 9

V. OVERVIEW OF THE PRIOR ART 18

A. Takamatsu ’318 18

B. Takamatsu ’372 20

VI. SUMMARY OF ARGUMENT 23

VII. SPECIFIC GROUNDS FOR UNPATENTABILITY 23

A. Ground I: Claims 1-10, 14-15, and 19-22 are Anticipated by Takamatsu ’318 24

1. Independent Claim 1 24

[1] A reconfigurable apparatus for supporting at least part of a user's weight with the user in an operative position with respect to the reconfigurable apparatus, the reconfigurable apparatus comprising: 24

[1.a] a frame; 24

[1.b] a first component on the frame upon which a force is applied by a user in a first manner as an incident of the user assuming the operative position,.....25

[1.c] at least a second component on the frame that is movable relative to the first component and upon which a force can be applied by a user in the operative position in a second manner to reconfigure the apparatus by moving the at least second component relative to the first component; and 28

[1.d] an adjusting assembly cooperating between the first component and the at least second component and configured so that as an incident of the force being applied in the first manner changing in magnitude, the force required to be applied in the second manner to reconfigure the apparatus and move the second component relative to the first component changes in magnitude. 33

2. Dependent Claim 2 39

3. Dependent Claim 3 40

4. Dependent Claim 4 40

5. Dependent Claim 5 41

6. Dependent Claim 6 42

7. Dependent Claim 7 43

8. Dependent Claim 8 45

9. Dependent Claim 9 46

10. Dependent Claim 10 47

11. Dependent Claim 14 48

12. Dependent Claim 15 49

13. Dependent Claim 19 51

14. Dependent Claim 20 52

15. Dependent Claim 21 52

16. Dependent Claim 22 53

B. Ground II: Claims 1 and 18 are Anticipated by Takamatsu ’372 54

1. Independent Claim 1 54

[1] A reconfigurable apparatus for supporting at least part of a user’s weight with the user in an operative position with respect to the reconfigurable apparatus, the reconfigurable apparatus comprising: 54

[1.a] a frame; 55

[1.b] a first component on the frame upon which a force is applied by a user in a first manner as an incident of the user assuming the operative position,.....56

[1.c] at least a second component on the frame that is movable relative to the first component and upon which a force can be applied by a user in the operative position in a second manner to reconfigure the apparatus by moving the at least second component relative to the first component; and 58

[1.d] an adjusting assembly cooperating between the first component and the at least second component and configured so that as an incident of the force being applied in the first manner changing in magnitude, the force required to be applied in the second manner to reconfigure the apparatus and move the second

component relative to the first component changes in magnitude. 64

2. Dependent Claim 18 72

C. Ground III: Claim 18 Would Have Been Obvious at the Time of Alleged Invention in View of the Combination of Takamatsu ’318 and Takamatsu ’372 74

1. Using the Rack and Pinion Gears of Takamatsu ’372 with Takamatsu ’318 Is Merely a Simple Substitution of One Known Element for Another.....74

2. Express Teachings of Takamatsu ’318 and Takamatsu ’372 Would Have Motivated a PHOSITA to Combine the References 82

3. A PHOSITA Would Have Had a Reasonable Expectation of Success in Combining Takamatsu ’318 and Takamatsu ’372 ..87

4. Claim 18 Would Have Been Obvious at the Time of Alleged Invention 89

VIII. CONCLUSION.....90

CERTIFICATION UNDER 37 C.F.R. § 42.24(d) 91

CERTIFICATE OF SERVICE 92

CLAIM LISTING APPENDIX 93

EXHIBITS

Exhibit	Description
1101	U.S. Patent No. 10,292,498 ("the '498 Patent")
1102	File History for U.S. Patent App. No. 15/040,735
1103	U.S. Patent No. 5,080,318 ("Takamatsu '318")
1104	U.S. Patent No. 5,348,372 ("Takamatsu '372")
1105	U.S. Patent App. Publication No. 2009/0261637 A1 ("Schmitz '637")
1106	U.S. Patent App. Publication No. 2012/0038195 A1 ("Lee")
1107	Int'l Publication No. WO 2010/120139 A1
1108	Declaration of Marcus C. Koepke
1109	Marcus C. Koepke CV

Pursuant to 35 U.S.C. §§ 311 *et seq.* and 37 C.F.R. § 42.100 *et seq.*, MillerKnoll, Inc. ("Petitioner") hereby petitions for *inter partes* review ("IPR") and cancellation of Claims 1-10, 14-15, and 18-22 of U.S. Patent No. 10,292,498 ("the '498 Patent," Ex. 1101), titled "Apparatus with Weight Responsive Changeable Adjusting Characteristics."

I. MANDATORY NOTICES

A. Real Parties in Interest & Related Matters

MillerKnoll, Inc. is the real party-in-interest. No unnamed entity is funding, controlling, or directing the IPR of the '498 Patent, or otherwise has an opportunity to control or direct this Petition or Petitioner's participation in any resulting IPR.

U.S. Patent No. 10,893,753 ("the '753 Patent") claims priority to the '498 Patent. Concurrent to the filing of this Petition, MillerKnoll is petitioning for IPR of claims 1-22 of the '753 Patent in IPR2023-01427.

Petitioner further identifies that the '498 Patent is currently asserted in *DeJule v. Miller Knoll, Inc.*, Case No. 1:23-cv-00969-RJJ-SJB (W.D. Mich., filed Sept. 13, 2023).

B. Lead & Back-Up Counsel, Service Information

Petitioner designates counsel listed below and consents to electronic service. A power of attorney for counsel is being filed with this Petition.

Lead Counsel	**Back-Up Counsel**
Erik Maurer (Reg. No. 48,648) emaurer@bannerwitcoff.com Banner & Witcoff, Ltd. 71 S. Wacker Dr. Ste. 3600 Chicago, IL 60606 Tel: (312) 463-5000 Fax: (312) 463-5001	Audra Eidem Heinze (Reg. No. 61,267) aheinze@bannerwitcoff.com Alexander Bruening (Reg. No. 76,293) abruening@bannerwitcoff.com Banner & Witcoff, Ltd. 71 S. Wacker Dr. Ste. 3600 Chicago, IL 60606 Tel: (312) 463-5000 Fax: (312) 463-5001

Please address all correspondence to counsel at this address shown above. Petitioner consents to electronic service by email at the following address and the above emails: MillerKnoll_IPRservice@bannerwitcoff.com.

II. GROUNDS FOR STANDING & FEE PAYMENT

Petitioner hereby certifies that the ’498 Patent is available for IPR and that Petitioner is not barred or estopped from requesting an IPR challenging Claims 1-10, 14-15, and 18-22 on the grounds identified in this Petition.

The undersigned authorizes the charge of any necessary fees to Deposit Account No. 19-0733.

III. OVERVIEW OF THE ’498 PATENT

A. Brief Description

The ’498 Patent, titled “Apparatus with Weight Responsive Changeable Adjusting Characteristics,” was filed February 10, 2016, and issued May 21, 2019. Ex. 1101, 1.

The ’498 Patent relates to mechanisms that can be used with chairs, such as office chairs. Ex. 1101, 5:6-8; Ex. 1108, ¶28. In particular, the ’498 Patent discloses a mechanism that purports to automatically adjust the amount of force required to lean back in a chair based on a user’s weight. Ex. 1108, ¶28. Figure 2 of the ’498 Patent shows a chair 10 incorporating an “adjusting assembly 18” for providing this functionality, and Figure 3 shows one specific assembly. Ex. 1101, Figs. 2, 3; *id*., 4:16-22; Ex. 1108, ¶¶34-35.

Ex. 1101, Fig. 2	Ex. 1101, Fig. 3
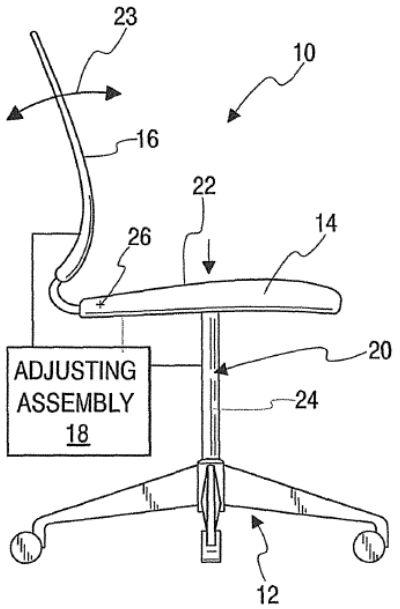	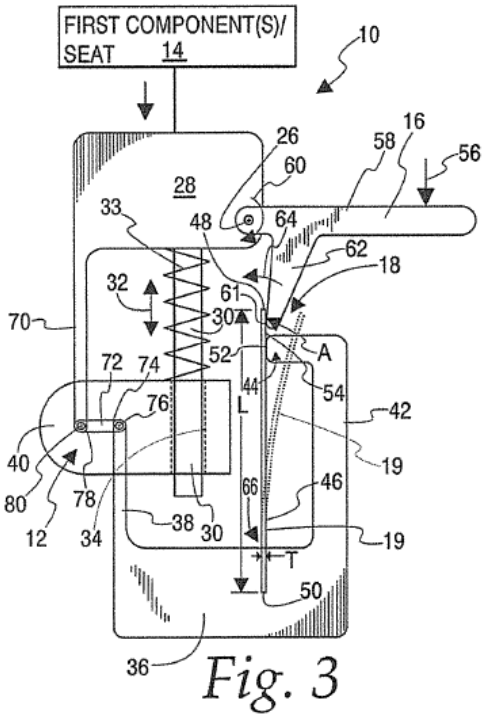

The assembly includes a leaf spring 19 that resists leaning, or tilting, of the chair's backrest 16, where the effective length of the leaf spring is proportionately reduced in response to the weight of a user sitting in the chair. Ex. 1108, ¶¶37-38. The heavier the user, the shorter the leaf spring's effective length and the more force required to tilt the backrest. *Id*.

To this end, as shown in Figure 3, a seat 14 is attached to a support 28 that is mounted on a frame component 12 via descending post 30. Ex. 1108, ¶35; Ex. 1101, 6:6-9. A coil spring 33 between the frame 12 and the support 28 biases support 28 upwardly against the weight of a user. Ex. 1108, ¶35; Ex. 1101, 6:10-13. Also

mounted on support 28 is a backrest component 58, which pivots about axis 26 in response to a user leaning back in the chair. Ex. 1108, ¶36; Ex. 1101, 6:36-43. The assembly also includes a "U-shaped member 36" that includes a leg 38 mounted on frame 12. Ex. 1108, ¶37; Ex. 1101, 6:14-16. Leaf spring 19 is anchored in U-shaped member 36 and extends up to support backrest component 58 against rotation thereof at location A. Ex. 1108, ¶37; Ex. 1101, 6:26-27, 6:44-53.

When a user sits on seat 14, coil spring 33 compresses in proportion to the user's weight, and seat 14, support 28, and backrest component 58 all move down a corresponding distance relative to frame 12, U-shaped member 36, and leaf spring 19. Ex. 1108, ¶38; Ex. 1101, 6:62-65. As a result, the location A at which backrest component 58 bears against leaf spring 19 also moves down relative to leaf spring 19. Ex. 1108, ¶38; Ex. 1101, 6:65-67. In this way, the effective length of leaf spring 19 decreases, and more force is required to pivot backrest component 58 about axis 26. Ex. 1108, ¶38; Ex. 1101, 6:67-7:7.

In an alternative embodiment shown in Figure 7 of the '498 Patent, the mechanism includes rack gears and pinion gears that convert downward movement of the seat into upward movement of the leaf spring. Ex. 1101, Fig. 7; *id*., 7:66-8:11; Ex. 1108, ¶¶39-40. In this way, the effective length of the leaf spring is decreased not only by the distance the seat moves down, but also by the distance the leaf spring moves up. Ex. 1108, ¶41.

Ex. 1101, Fig. 7

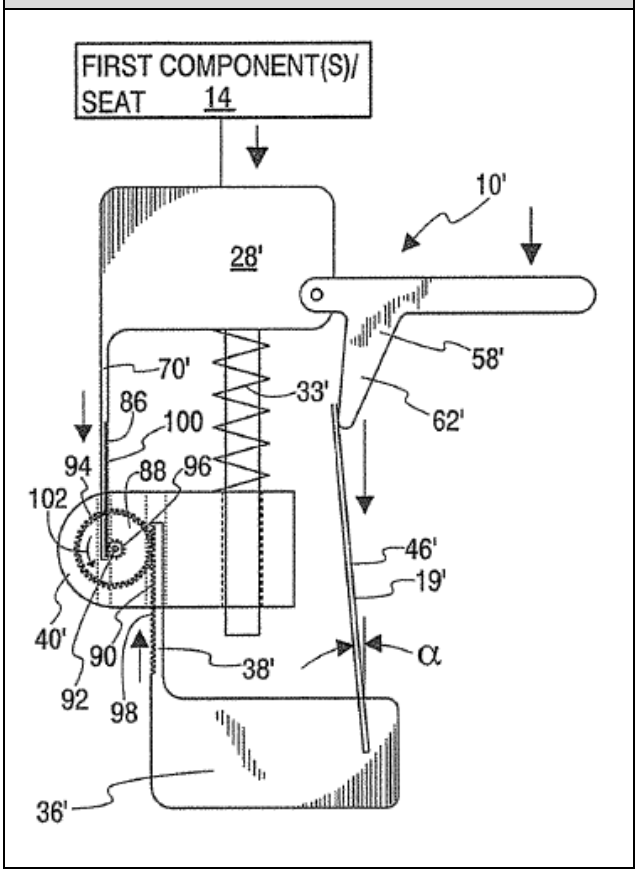

B. Prosecution History of the ’498 Patent

The ’498 Patent issued from the ’735 Application, filed February 10, 2016. Ex. 1101, 1.

Independent claim 1 of the ’735 Application recited a “frame,” a “first component” (e.g., a seat), a “second component” (e.g., a backrest), and an “adjusting assembly” configured so that, as an incident of force on the “first component” changing (e.g., the user sitting), the “force being applied in the second manner required to configure the apparatus” (e.g., the force required to tilt the backrest) also changes. Ex. 1102, 30.

The examiner rejected all pending claims as either anticipated by or obvious in view of Schmitz '637. Ex. 1102, 84-87; *see* Ex. 1105. The examiner observed that Schmitz '637 discloses multiple embodiments of a mechanism that alters the amount of force required to tilt the backrest of a chair based on the weight of a user. *Id*.

The applicants narrowed the claims in response, amending claim 1 to specify that the "adjusting assembly" changes the amount of force required to "move the second component relative to the first component" (e.g., tilt the backrest relative to the seat)—as opposed to simply changing the force required to move the second component from its starting position. Ex. 1102, 104. Applicants argued this amendment distinguished over Schmitz '637 because, allegedly, the backrest of Schmitz '637 "pivot[s]…as a unit" with its seat, rather than independently of its seat. *Id*., 112. The examiner agreed, *id*., 139, and the '498 Patent issued May 21, 2019, Ex. 1101, 1.

IV. IDENTIFICATION OF CHALLENGE AND RELIEF REQUESTED

A. Claims Challenged and Grounds for Challenge

Petitioner requests review of the following claims on the following Grounds:

Ground	Claims Challenged	Basis	Prior Art
I	1-10, 14-15, and 19-22	102(a)(1)	Takamatsu '318
II	1 and 18	102(a)(1)	Takamatsu '372
III	18	103	Takamatsu '318 in view of Takamatsu '372

Neither Takamatsu ’318 nor Takamatsu ’372 was cited or otherwise made of record during prosecution of the ’498 Patent. Ex. 1101, 1-2; *see* Ex. 1102.

Petitioner submits the Declaration of Marcus Koepke in support of Grounds I-III, which includes testimony as to how a person of ordinary skill in the art (“PHOSITA”) would understand the claims of the ’498 Patent and the disclosures of the prior art. Ex. 1108. This testimony was not of record during prosecution and further supports institution. *Halliburton Energy Servs., Inc. v. Schlumberger Tech. Corp.*, IPR2017-02070, Paper 13, 5-6 (PTAB Apr. 13, 2018).

B. Level of Skill in the Art and How the Challenged Claims Are to Be Construed

1. Level of Skill in the Art

The ’498 Patent is directed to seating mechanisms and, more particularly, to mechanisms that automatically adjust resistance to leaning back in a chair based on a user’s weight. Ex. 1108, ¶28. As of the presumptive priority date of February 11, 2015, and for at least several years prior, a person of ordinary skill in the art of the ’498 patent would have had a bachelor’s degree in industrial design, mechanical engineering, and/or a related field, and at least 2-3 years of experience designing furniture. *Id.*, ¶29.

2. How the Claims Are to Be Construed

No claim terms require construction except those below, which warrant construction under the standard used in civil actions under 35 U.S.C. § 282(b), *i.e.*

the standard of *Phillips v. AWH Corp*., 415 F.3d 1303 (Fed. Cir. 2005) (en banc) and its progeny. 37 C.F.R. § 42.100(b).

3. Claim Construction

(i) "adjusting assembly"

"Adjusting assembly" is not a recognized term of art in the field of the '498 Patent. Ex. 1108, ¶47. As used in the claims of the '498 Patent, it should be construed as a means-plus-function ("MPF") claim element under 35 U.S.C. § 112(f). *Id*.

Claim elements that do not use the word "means" are presumed to not be MPF, but that presumption is overcome where the claim recites function without reciting sufficient structure for performing that function. *Williamson v. Citrix Online, LLC*, 792 F.3d 1339, 1348-49 (Fed. Cir. 2015).

Claim 1 of the '498 Patent recites function. Ex. 1108, ¶51. It reads: "an adjusting assembly…configured so that as an incident of the force being applied in the first manner changing in magnitude, the force required to be applied in the second manner to reconfigure the apparatus and move the second component relative to the first component changes in magnitude." Ex. 1101, 12:34-40.

But claim 1 does not recite sufficient structure for performing that function. For starters, a PHOSITA would not consider "adjusting assembly" to refer to any specific structure. Ex. 1108, ¶52. Nor does the '498 Patent define "adjusting assembly" as any definite structure; it merely describes examples of these

assemblies. *Id*., ¶53; Ex. 1101, 5:63-67. Claim 1 uses "adjusting assembly" as a "nonce" term that operates as a substitute for "means" to claim a function. *MTD Prods. Inc. v. Iancu*, 933 F.3d 1336, 1341-45 (Fed. Cir. 2019) (holding "mechanical control assembly" operated as nonce term).

Nor do the claims otherwise recite sufficient structure for providing the claimed function. Ex. 1108, ¶¶54-59. To avoid application of § 112(f), a claim must recite "sufficient structure to perform the entire claimed function." *Rodime PLC v. Seagate Tech., Inc.*, 174 F.3d 1294, 1305 (Fed. Cir. 1999); *see TriMed, Inc. v. Stryker Corp.*, 514 F.3d 1256, 1259-60 (Fed. Cir. 2008) ("Sufficient structure exists when the claim language specifies the exact structure that performs the functions in question without need to resort to other portions of the specification or extrinsic evidence for an adequate understanding of the structure."). Here, there are two other structures that are necessary, neither of which is recited in claim 1.

First, the claimed function requires a spring structure that variably resists the tilting of the chair's backrest—i.e., a tilting spring. Ex. 1108, ¶55. Such a spring structure resists movement of "the second component relative to the first component." *Id*. An example of a tilting spring in the '498 Patent is leaf spring 19, highlighted in blue below. *Id*.; Ex. 1101, Fig. 3.

Ex. 1101, Fig. 3

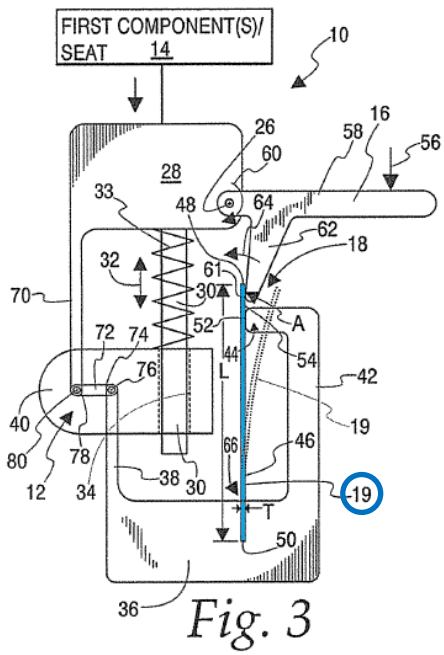

Fig. 3

Second, the claimed function requires a spring structure that deforms in proportion to the weight of a user in response to a user sitting in the chair—i.e., a weighing spring. Ex. 1108, ¶57. This spring allows the seat (seat 14) to move down in response to a user sitting, thereby reducing the effective length of the tilting spring (leaf spring 19) and changing the magnitude of the force required to move the second component relative to the first component—i.e., the claimed function. *Id*.

An example of a weighing spring in the ’498 Patent is coil spring 33, highlighted in green below. *Id*.; Ex. 1101, Fig. 3.

Ex. 1101, Fig. 3

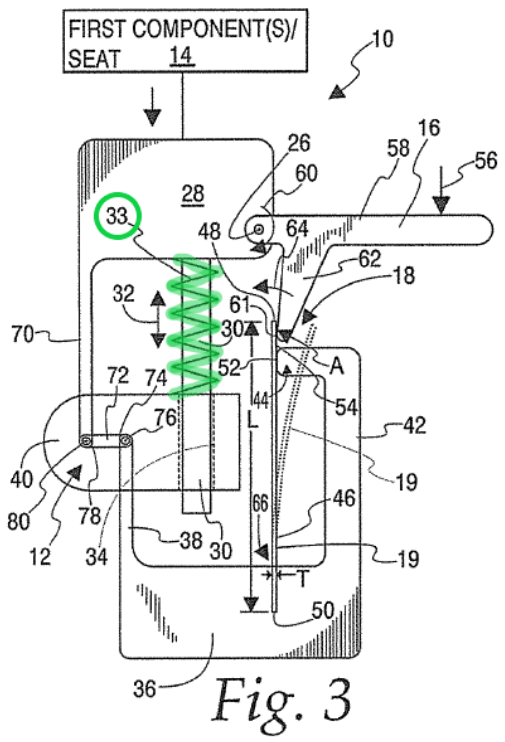

None of the claims of the ’498 Patent recite both of these structures. Ex. 1108, ¶59; Ex. 1101, 12:20-14:37. Certain claims recite a “spring assembly” that resists movement of the second component relative to the first component, Ex. 1101, 12:55-58, or a “biasing assembly” that “biasably urges the seat upwardly relative to the frame,” *id*., 14:30-33. But no claims recite both structures. Thus, “adjusting assembly” is properly construed as an MPF element despite the recitation of some structure in the claims of the ’498 Patent. *Egenera, Inc. v. Cisco Sys., Inc.*, 972 F.3d 1367, 1374 (Fed. Cir. 2020) (“The question is not whether a claim term recites *any* structure but whether it recites *sufficient* structure.”).

As for construction of "adjusting assembly," there are two steps: (1) identify the claimed function, and (2) identify the structure(s) disclosed in the specification corresponding to that function. *Williamson*, 792 F.3d at 1351.

First, the claimed function is "configured so that as an incident of the force being applied in the first manner changing in magnitude, the force required to be applied in the second manner to reconfigure the apparatus and move the second component relative to the first component changes in magnitude," which is recited in the claim itself. Ex. 1108, ¶60; Ex. 1101, 12:35-40; *see Generation II Orthotics Inc. v. Medical Technology Inc.*, 263 F.3d 1356, 1364-65 (Fed. Cir. 2001) (tribunals should not "adopt[] a function different from that explicitly recited in the claim").

Second, the corresponding structure is limited to that which is "necessary to perform the claimed function," *Micro Chemical, Inc. v. Great Plains Chemical Co.*, 194 F.3d 1250, 1258 (Fed. Cir. 1999), and does not include structures that "merely enable the pertinent structure to operate as intended," *Asyst Techs., Inc. v. Empak, Inc.*, 268 F.3d 1364, 1371 (Fed. Cir. 2001).

Here, the structures necessary to perform the claimed function are the two structures discussed above: the tilting spring and the weighing spring. Ex. 1108, ¶¶61, 56-59. As for the tilting spring, in addition to leaf springs, such as leaf spring 19 discussed above, *see* Ex. 1101, 6:22-25, the '498 Patent also discloses alternative tilting-spring structures: the use of a coil spring, such as coil spring $19^{6'}$, Ex. 1101,

9:65-10:3, 10:28-30; and a "torsion component 168," *id*., 10:48-11:4; Ex. 1108, ¶56. As for the weighing spring, the '498 Patent discloses only coil springs, such as coil spring 33 discussed above. Ex. 1101, 6:10-13; Ex. 1108, ¶58.

In sum, the corresponding structure of the "adjusting assembly" is (1) tilting springs in the form of leaf springs, coil springs, or torsion components, and (2) weighing springs in the form of coil springs, along with equivalents thereof. Ex. 1108, ¶¶61-62; 35 U.S.C. § 112(f).

(ii) "on the frame"

"[O]n the frame," as recited in claim 1 of the '498 Patent, should be construed under the *Phillips* standard as: supported directly or indirectly by the frame. Ex. 1108, ¶¶63-67.

Claim 1 recites "on the frame" in connection with two elements: a "first component on the frame" and a "second component on the frame." Ex. 1101, 12:25-28. A PHOSITA would understand "on the frame" in this context to mean "supported directly or indirectly by the frame" in view of the specification of the '498 Patent, which does not disclose an embodiment in which a "first component" or a "second component" is directly contacting a "frame." Ex. 1108, ¶¶64-65. Rather, as in the embodiment shown in Figure 3, there are always intervening components between the first component 14 and the second component 16 on the

one hand, and the frame 12 on the other—such as support 28 and depending post 30. *Id.*; Ex. 1101, 6:6-10, Fig. 3.

Ex. 1101, Fig. 3

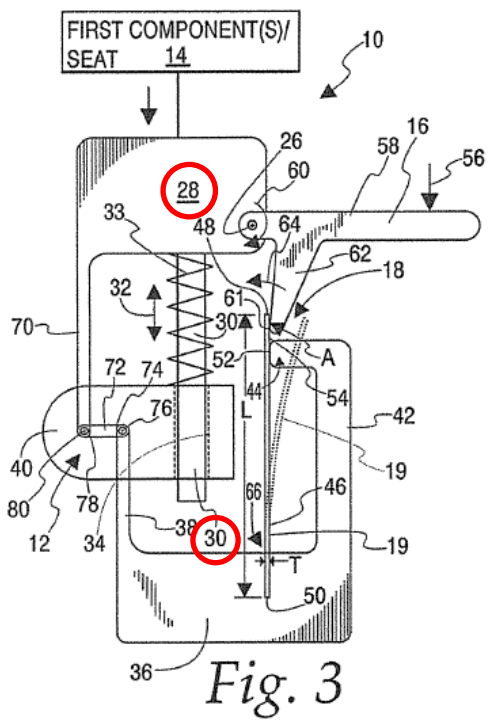

A "construction that excludes all disclosed embodiments…is especially disfavored." *Kaneka Corp. v. Xiamen Kingdomway Grp.*, 790 F.3d 1298, 1304 (Fed. Cir. 2015). Here, there is no support for a construction that would require direct contact between a "first component" or a "second component" and a "frame," and "on the frame" should thus be construed as "supported directly or indirectly by the frame." Ex. 1108, ¶65.

Moreover, the examiner of the ’498 patent did not understand “on the frame” to be limited to direct contact. As noted above, the examiner rejected claim 1 as anticipated by Schmitz ’637, finding in reference to Fig. 7a that reference numeral “4” is the frame, reference numeral “7” is the first component, and reference numeral “B” is the second component. Ex. 1102, 86; Ex. 1108, ¶66. As shown in Figure 7a below, these components are not directly contacting the frame; they are merely indirectly supported by it. Ex. 1105, Fig. 7a; Ex. 1108, ¶66.

Ex. 1105, Fig. 7a

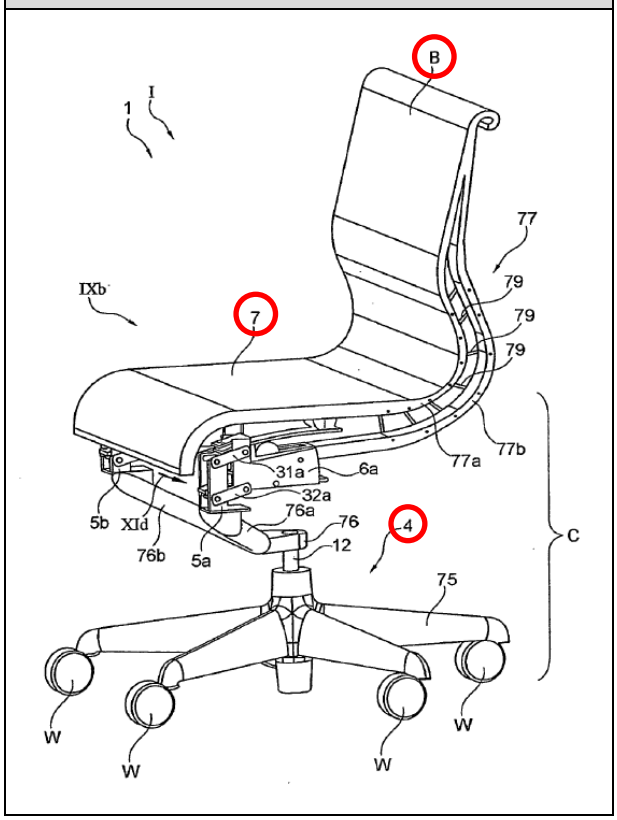

Applicants did not dispute this interpretation of “on the frame” and instead distinguished Schmitz ’637 on other grounds. Ex. 1102, 110-113; Ex. 1108, ¶67.

This further confirms that "on the frame" should be construed as "supported directly or indirectly by the frame." *Cordis Corp. v. Medtronic AVE, Inc.*, 339 F.3d 1352, 1359-60 (Fed. Cir. 2003) (examiner's undisputed interpretation of claim term relevant to construction).

V. OVERVIEW OF THE PRIOR ART

A. Takamatsu ’318

U.S. Patent No. 5,080,318 to Takamatsu et al. (“Takamatsu ’318”) issued January 14, 1992, Ex. 1103, 1, and is therefore prior art to the claims of the ’498 Patent under § 102(a)(1). Takamatsu ’318, which was not of record during prosecution of the ’498 Patent, discloses multiple embodiments of a chair with a mechanism that automatically adjusts the amount of force required to lean back in the chair based on the weight of the user. *See* Ex. 1103, Fig. 8.

Ex. 1103, Fig. 8

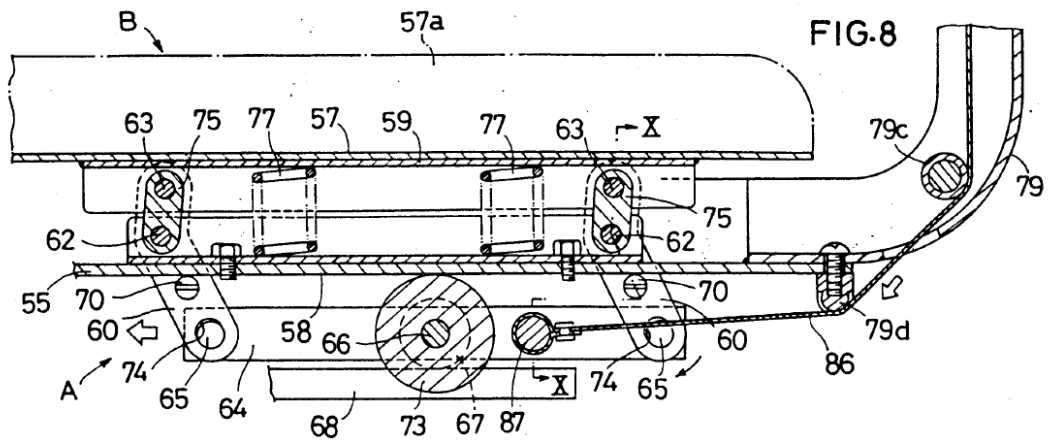

Referring to Figure 12 of Takamatsu ’318, a chair back C is pivotally mounted to the chair about horizontal pins 82. Ex. 1103, 9:47-50. Chair back C can pivot relative to seat B against the resisting force of two “second tilting control plate spring[s] 83.” *Id.*, 9:37-40. Chair back C bears against the plate springs 83 via “contact pin[s] 85.” *Id.*, 10:6-12.

Ex. 1103, Fig. 12

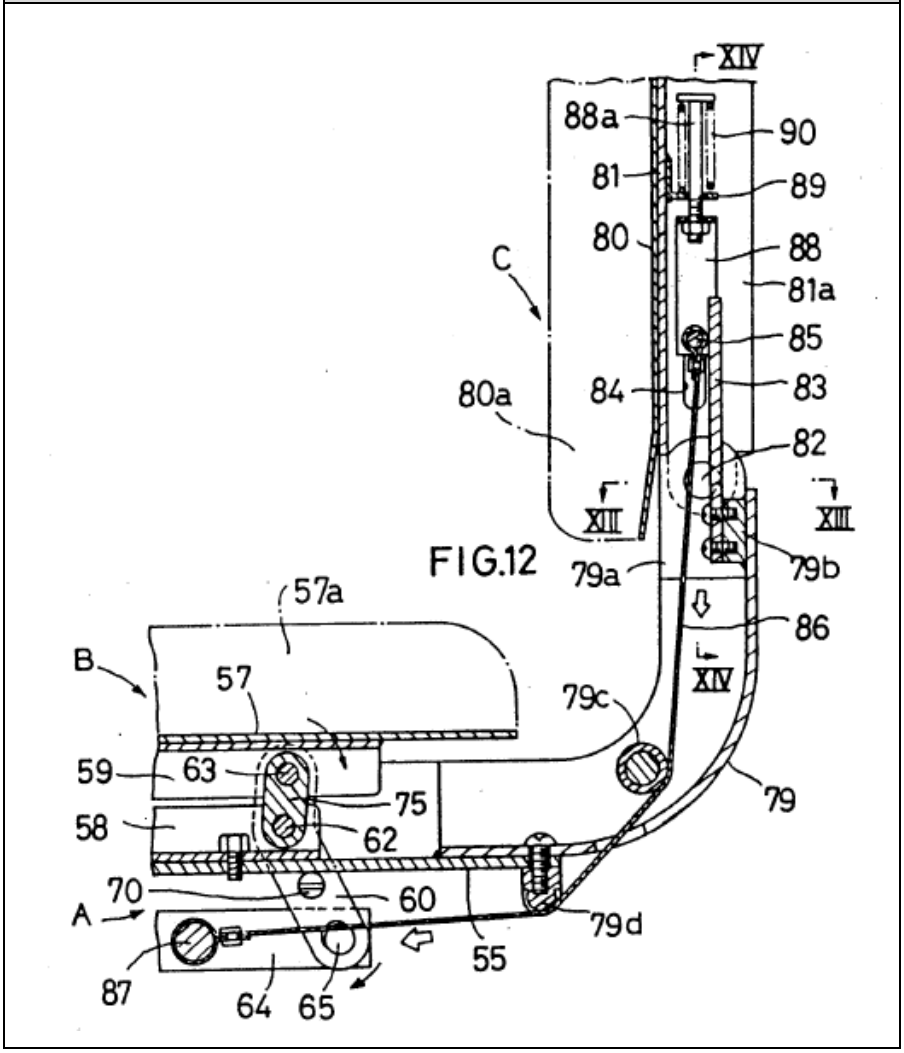

As explained in more detail below, when a user sits on seat B, contact pins 85 are pulled down relative to plate springs 83, reducing the effective length of the springs and increasing the amount of force required to tilt chair back C relative to seat B. Ex. 1103, 10:13-26.

B. Takamatsu ’372

U.S. Patent No. 5,348,372 to Takamatsu et al. (“Takamatsu ’372”) issued September 20, 1994, Ex. 1104, 1, and is therefore prior art to the claims of the ’498 Patent under § 102(a)(1). Takamatsu ’372, which was not of record during prosecution of the ’498 Patent, Ex. 1101, 1-2, also discloses multiple embodiments of a chair with a mechanism that automatically adjusts the amount of force required to lean back in the chair based on the weight of the user. *See* Ex. 1104, Fig. 2.

Ex. 1104, Fig. 2

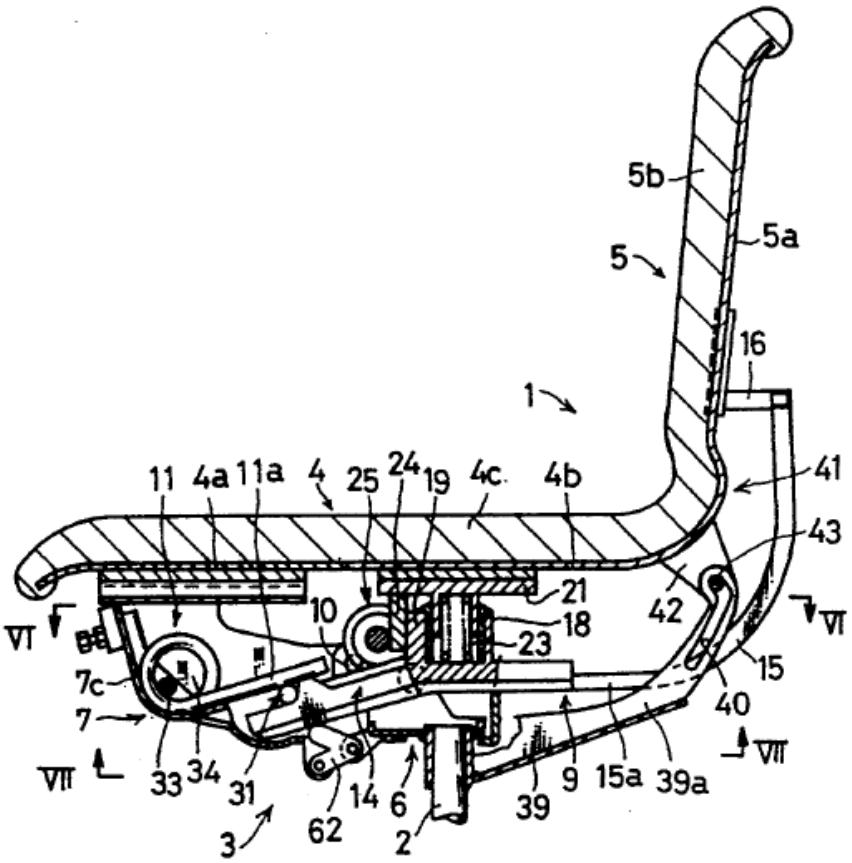

Referring to Figure 3 of Takamatsu ’372, the seat back 5 of the chair is connected to a tiltable member 9 that, in turn, is pivotally connected to a pivotal frame 7. Ex. 1104, Fig. 3; *id*., 4:24-26, 4:53-56. The tilting of tiltable member 9 and thus seat back 5 are controlled by a pair of tilting control springs 11—in the form of torsion coil springs—that are fixed to pivotal frame 7. *Id*., 4:27-34.

Ex. 1104, Fig. 3

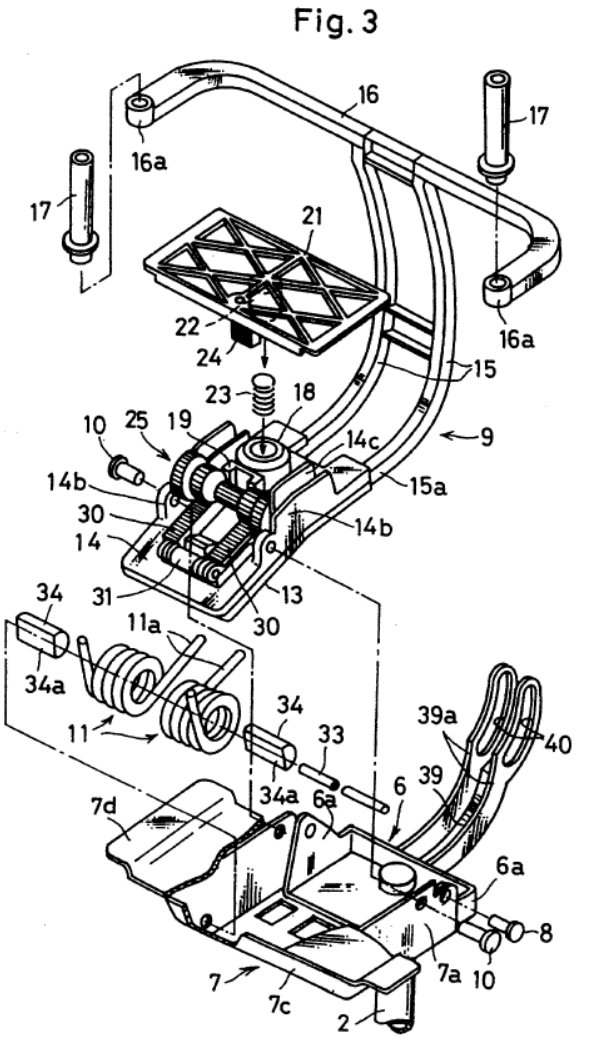

Referring to Figure 8 of Takamatsu ’372, a sectional view of the chair’s mechanism is shown. Ex. 1104, Fig. 8. Tiltable member 9 bears against load receiving legs 11a of the tilting control springs 11 via a load applying pin 32 mounted on a rack gear 30. Ex. 1104, 5:49-55.

Ex. 1104, Fig. 3

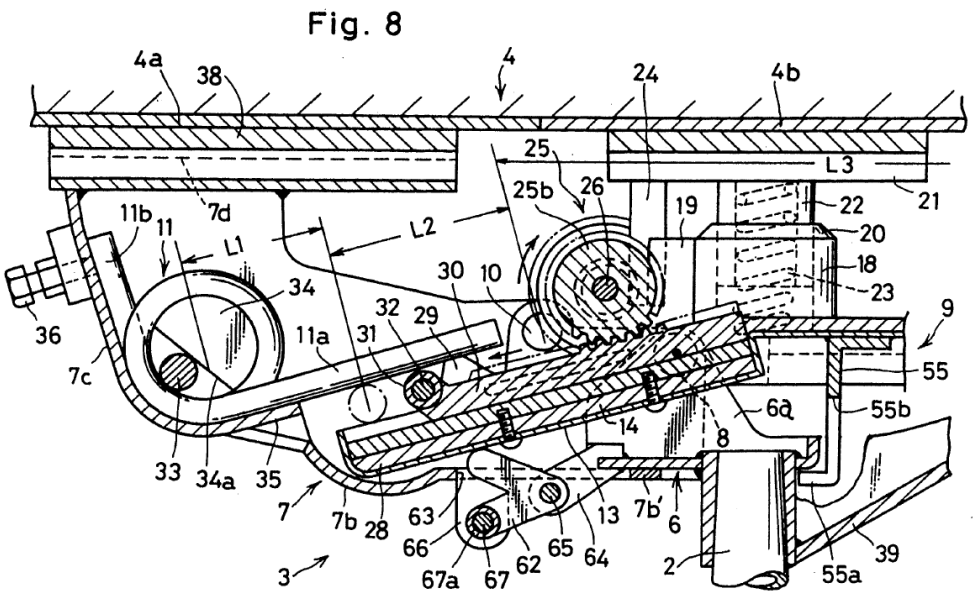

As explained in more detail below, when a user sits in the chair, rack gear 30 and thus load applying pin 32 are driven to the left. Ex. 1104, 7:21-25. As a result, the effective length of load receiving legs 11a of each tilting control spring 11 decreases, and more force is required to tilt seat back 5. *Id.*, 7:25-30, 7:65-8:39.

VI. SUMMARY OF ARGUMENT

The ’498 Patent claimed automatic adjusting of the force required to lean back in a chair based on a user’s weight. But that functionality has been known in the art of seating mechanisms for decades. Indeed, the examiner of the ’498 Patent rejected the original claims as anticipated by or obvious in view of Schmitz ’637. The applicants distinguished Schmitz ’637 by adding a limitation to the sole pending independent claim—that the claimed adjusting assembly vary the amount of force required to move the “second component” (e.g. the backrest) relative to the “first component” (e.g. the seat). But other prior art references, including Takamatsu ’318 and Takamatsu ’372, disclose mechanisms that achieve that same functionality in chairs with a “second component” that can move relative to a “first component.” Claim 1 of the ’498 Patent, along with many dependent claims, are therefore unpatentable in view of these references.

VII. SPECIFIC GROUNDS FOR UNPATENTABILITY

This *inter partes* review petition demonstrates “a reasonable likelihood that the Petitioner would prevail with respect to at least one of the claims challenged in the petition.” 35 U.S.C. § 314(a). The following grounds demonstrate that the challenged claims are unpatentable as anticipated and/or obvious.

A. Ground I: Claims 1-10, 14-15, and 19-22 are Anticipated by Takamatsu '318

1. Independent Claim 1

[1] A reconfigurable apparatus for supporting at least part of a user's weight with the user in an operative position with respect to the reconfigurable apparatus, the reconfigurable apparatus comprising:

Takamatsu '318 discloses a chair that supports at least part of a user's weight and that can be reconfigured, including by tilting the back of the chair. Ex. 1103, 1:6-9; Ex. 1108, ¶¶73-74.

[1.a] a frame;

Takamatsu '318 discloses a chair that "comprises a support mechanism A and a seat B," wherein the "support mechanism A" includes a "fixed frame 50" that is "secured to the upper end of a chair leg post 2." Ex. 1103, 7:47-51. The "fixed frame 50" (red below) and the "chair leg post 2" (green below) are the claimed "frame." Ex. 1108, ¶¶75-77; Ex. 1103, Figs. 6, 11.

Ex. 1103, Fig. 6	Ex. 1103, Fig. 11
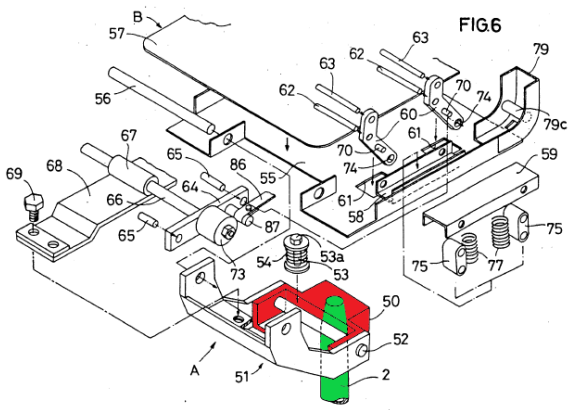	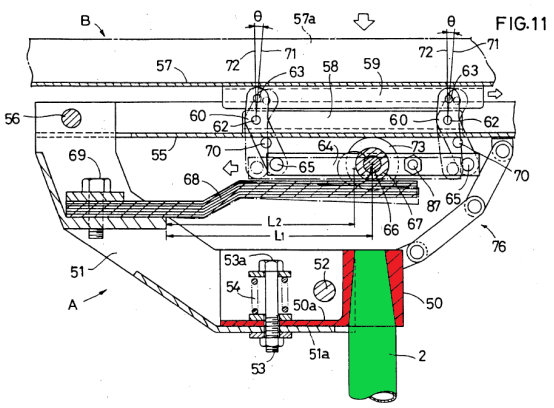

[1.b] a first component on the frame upon which a force is applied by a user in a first manner as an incident of the user assuming the operative position,

As discussed in Section IV.B.3.ii, "on the frame" means "supported directly or indirectly by the frame." Takamatsu '318 discloses a "seat B," a first component, that is supported indirectly by fixed frame 50. Ex. 1103, 7:47-50; Ex. 1108, ¶¶79-82.

To that end, seat B is connected to a "seat plate 57," which is movably mounted to a "seat base 55." Ex. 1108, 7:66-8:2. A pair of "upper channel members 59" (blue below) extend down from seat plate 57 (red below), and a pair of "lower channel members 58" (yellow below) extend up from seat base 55 (green below). Ex. 1103, 8:4-11; *id*., Figs. 6, 8; Ex. 1108, ¶79.

Ex. 1103, Fig. 6	Ex. 1103, Fig. 8
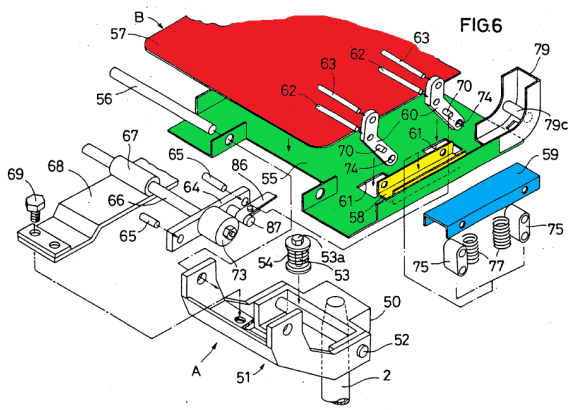	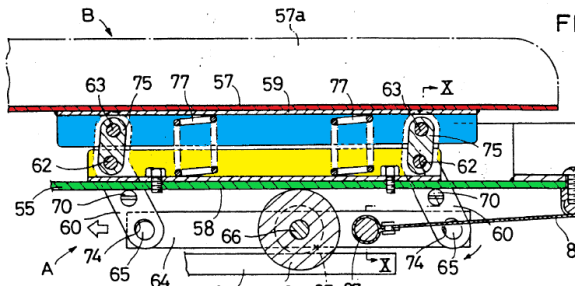

The respective channel members, and thus seat base 55 and seat 57, are connected via "bent links 60" and "auxiliary links 75." Ex. 1103, 8:11-20; *id*., 9:3-9. The bent links 60 (yellow below) and auxiliary links 75 (green) are pivotally mounted to the channel members via "pin[s] 62 and 63" (blue), *id*., and "weight responsive springs 77" (red below) are interposed between seat plate 57 and seat base 55, *id*., 8:39-42. Ex. 1108, ¶80; Ex. 1103, Figs. 6, 8.

Ex. 1103, Fig. 6	Ex. 1103, Fig. 8
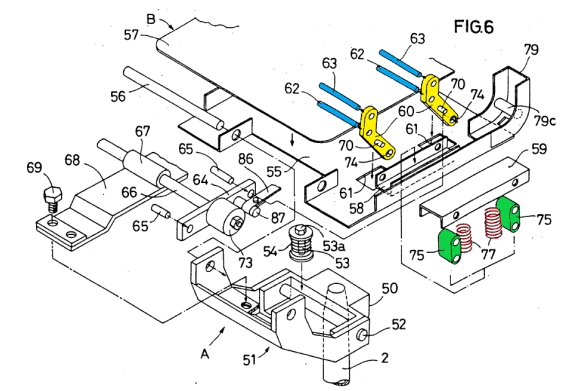	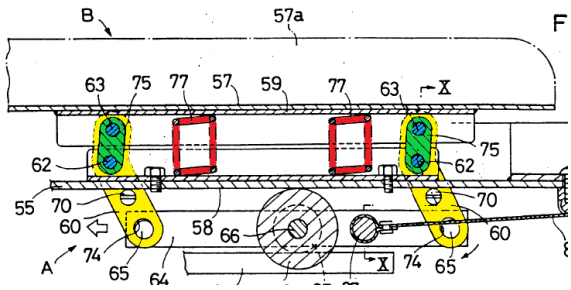

Seat base 55 (green below), in turn, is pivotally mounted to a "pivotal frame 51" (blue below) via "horizontal pin 56" (red below), and pivotal frame 51 is pivotally mounted to "fixed frame 50" (yellow below) via "horizontal pin 52" (red below). Ex. 1103, 7:52-68; *id*., Fig. 6; Ex. 1108, ¶81.

Ex. 1103, Fig. 6

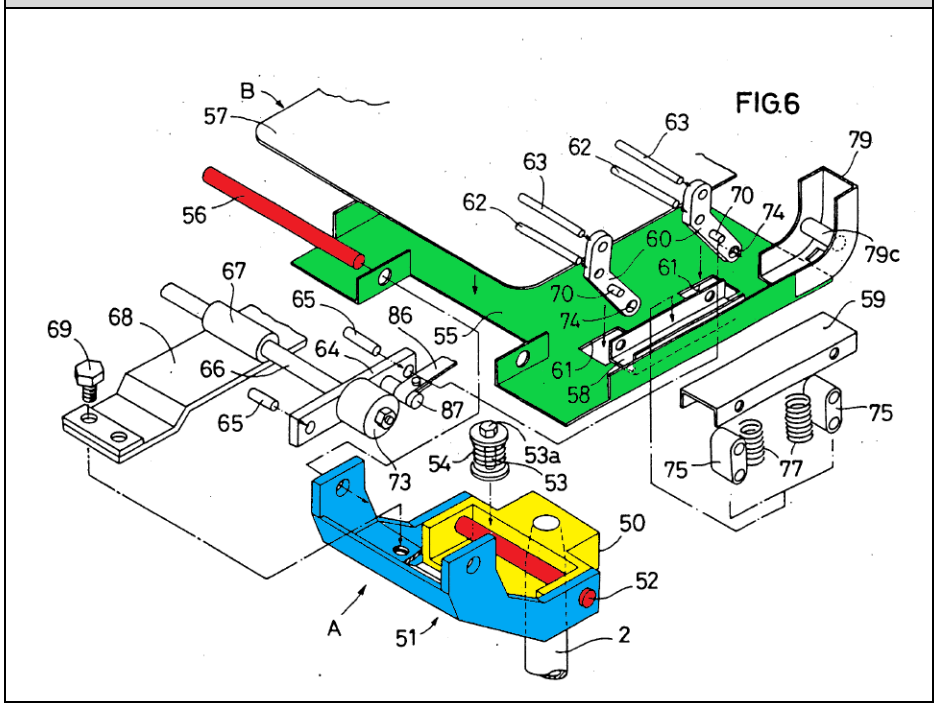

Thus, Seat B is supported by the frame. Ex. 1108, ¶82.

Moreover, a force is applied to seat B by a user in a first manner when the user assumes the operative position: when a "user sits on the seat B" (the user assuming the operative position), the "seat plate 57 is displaced downward…against the weight responsive springs 77," which is the result of the force applied on seat B in a first manner. Ex. 1103, 9:19-23; Ex. 1108, ¶¶83-84.

[1.c] at least a second component on the frame that is movable relative to the first component and upon which a force can be applied by a user in the operative position in a second manner to reconfigure the apparatus by moving the at least second component relative to the first component; and

Takamatsu '318 discloses a "chair back C," a second component, that is indirectly supported by the frame. Ex. 1103, 9:37-38; Ex. 1108, ¶¶85-89; *see* Section IV.B.3.ii, *supra* ("on the frame" means "supported directly or indirectly by the frame").

To that end, two "back support posts 79" (blue below), on which chair back C is mounted, extend up from the back corners of seat base 55. Ex. 1103, 9:43-47; *id*., Figs. 7, 8; Ex. 1108, ¶¶86-87.

Ex. 1103, Fig. 7	Ex. 1103, Fig. 8
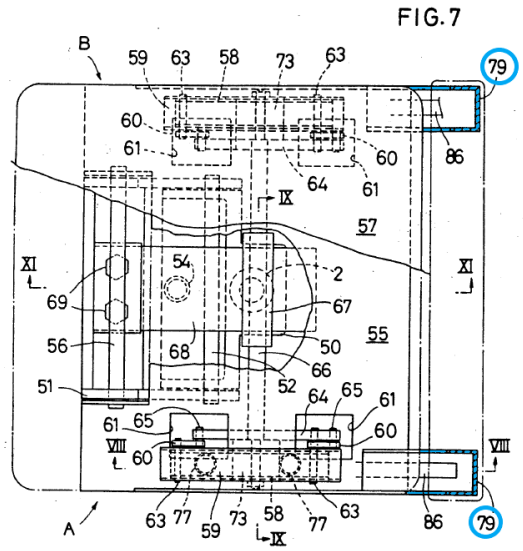	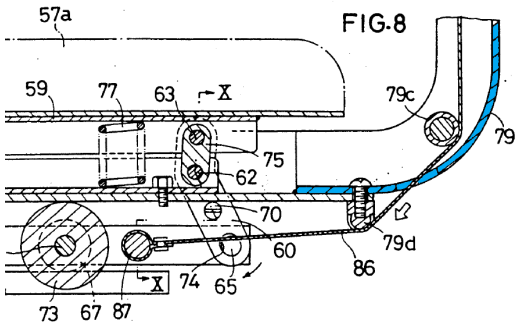

Chair back C is pivotally mounted to "mounting brackets 79a" that are attached to the upper end of each back support post 79. Ex. 1103, 9:43-50; Ex. 1108, ¶88. In particular, chair back C (orange below) includes a "back mounting frame 81" with "side flanges 81a" (red below) that are pivotally connected to the "mounting brackets 79a" (yellow below) by "horizontal pins 82" (blue below). Ex. 1103, 9:47-50; *id*., Figs. 12, 13; Ex. 1108, ¶88.

Ex. 1103, Fig. 12	**Ex. 1103, Fig. 13 (top view)**
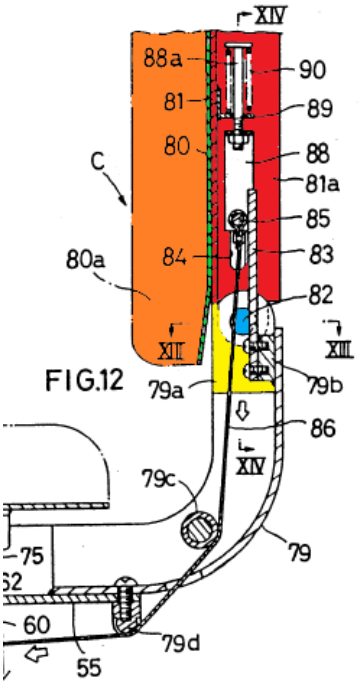	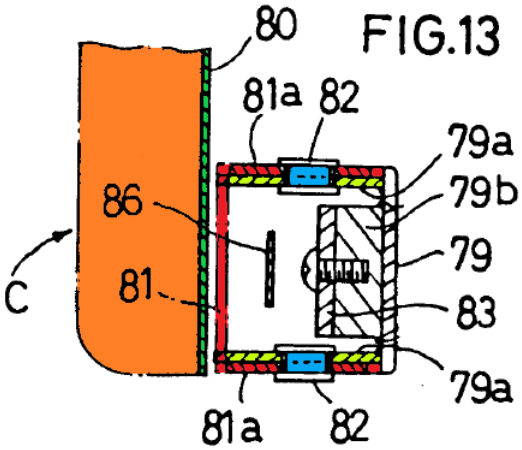

In other words, chair back C is mounted to seat base 55, which is supported by fixed frame 50. Chair back C is thus likewise supported by fixed frame 50 (the claimed "frame"). Ex. 1108, ¶89.

In addition, a force can be applied to chair back C in a "second manner" to move it relative to seat B. Ex. 1108, ¶¶90-93. Chair back C is "tiltable rearward about the pins 82 independently of…chair seat B," which tilting is "controlled by the second tilting control plate springs 83." Ex. 1103, 10:6-10. To that end, a "second tilting control plate spring 83" (yellow below) is attached to each of the "back support posts 79" (red below) via a "spacer" 79b (green below).[1] Ex. 1103, 9:55-57; *id*., Fig. 12; Ex. 1108, ¶90.

Ex. 1103, Fig. 12

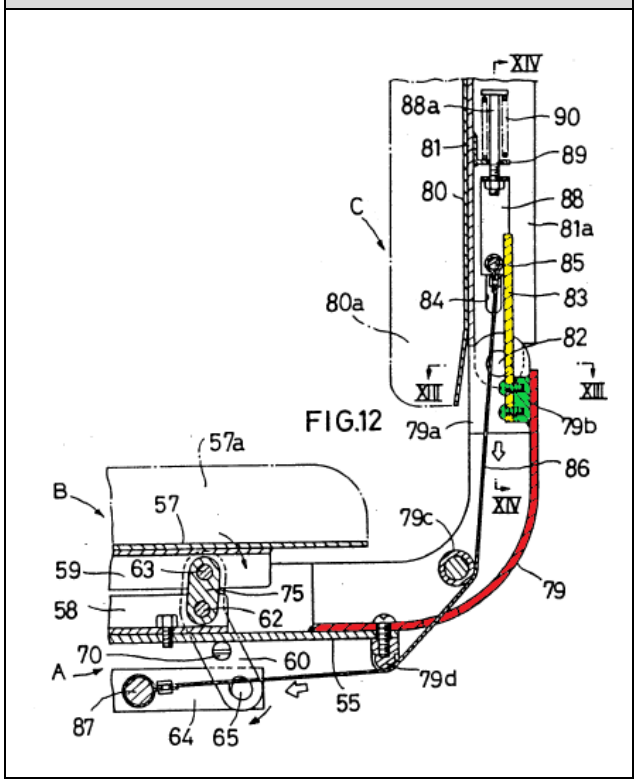

[1] Takamatsu '318 refers to "spacer 79a." Ex. 1103, 9:57. But as shown in Figure 12, this is a typo, and should be understood as "spacer 79b."

Chair back C bears against the plate springs 83 via "contact pin[s] 85" that are movably mounted in "vertical guide slots 84" formed in the "side flanges 81a" of the back support frame 81. Ex. 1103, 10:6-12; *id*., 9:57-60; Ex. 1108, ¶91. In particular, each contact pin 85 (green below) bears against a plate spring 83 (yellow) and is connected to a "vertical carrier 88" (orange) that, in turn, is connected to a "carrier bolt 88a" (blue), which is urged upwards by a "compression spring 90" (pink) against an "L-shaped bracket 89" (brown) mounted to back support frame 81 (purple). Ex. 1103, 9:67-10:5; *id*., Figs. 12, 14; Ex. 1108, ¶¶91-92.

Ex. 1103, Fig. 12	Ex. 1103, Fig. 14
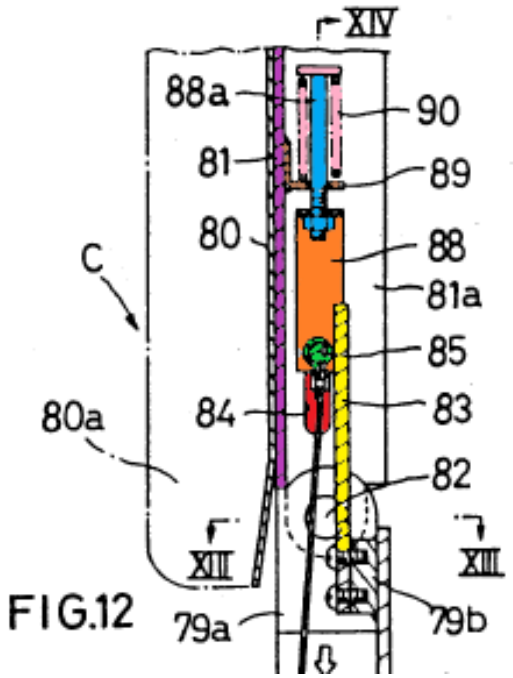 FIG.12	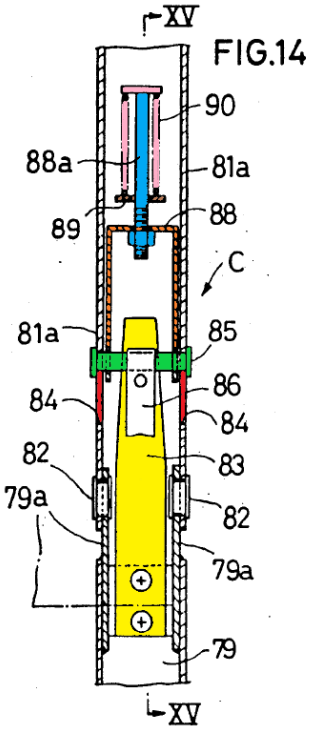 FIG.14

Thus, when a user leans against chair back C—a force applied in the second manner—the contact pins 85 bear against the plate springs 83 such that they are "elastically deformed" (red outline below), and chair back C rotates (green outline below) relative to seat B about horizontal pin 82 (orange). Ex. 1103, 10:6-12; *id.*, Fig. 15; Ex. 1108, ¶93.

Ex. 1103, Fig. 15

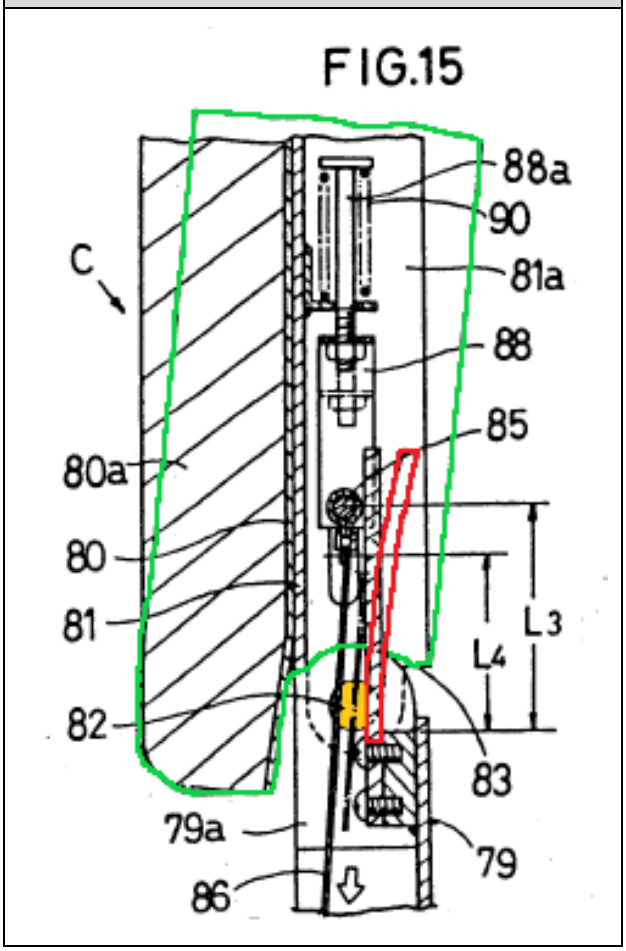

[1.d] an adjusting assembly cooperating between the first component and the at least second component and configured so that as an incident of the force being applied in the first manner changing in magnitude, the force required to be applied in the second manner to reconfigure the apparatus and move the second component relative to the first component changes in magnitude.

As discussed in Section IV.B.3.i above, "adjusting assembly" is properly construed as a means-plus-function claim element under § 112(f). Takamatsu '318 discloses this limitation regardless of MPF construction. Ex. 1108, ¶95.

First, as an incident of the force being applied in the first manner changing in magnitude, the force required to move chair back C relative to seat B changes in magnitude. Ex. 1108, ¶¶96-100. In short, a heavier user moves seat B down further than a lighter user, such that the effective length of plate springs 83 is shorter for a heavier user than for a lighter user, meaning more force is required for the heavier user to pivot chair back C relative to seat B. *Id*.

To that end, each contact pin 85 (blue below) is connected to a "pull band 86" (red below), which is connected at its other end to an "operating arm 64" (yellow below) that is pivotally connected to the bottom of bent links 60. Ex. 1103, 9:59-63, 8:21-26; *id*., Fig. 12; Ex. 1108, ¶97.

Ex. 1103, Fig. 12

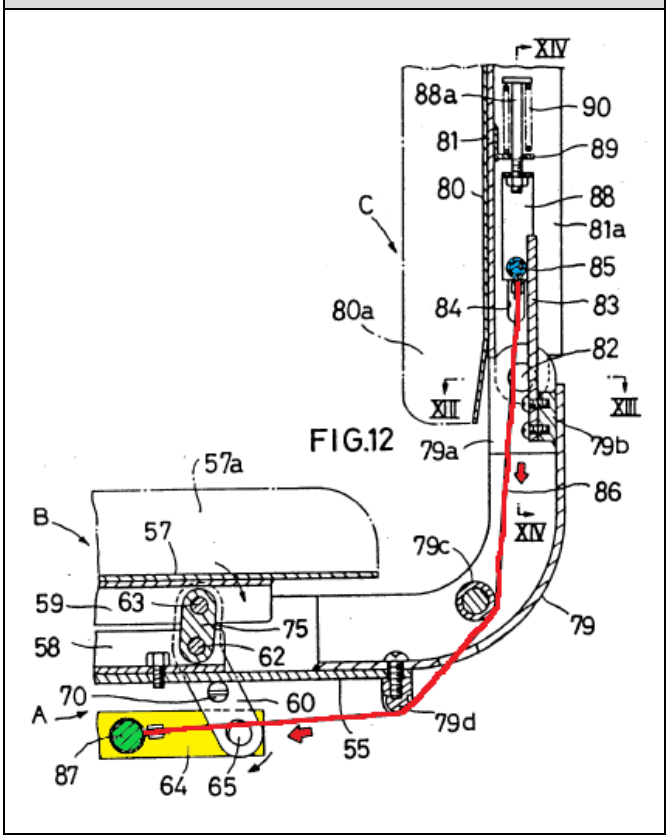

The weight of the user causes operating arms 64 to translate toward the front of the chair. Ex. 1108, ¶98. In particular, as the seat plate 57 (blue below) moves down against the weight responsive springs 77 toward the seat base 55 (red below), bent links 60 (green below) pivot about pins 62, such that the lower ends of bent links 60 drive operating arms 64 (yellow below) forward, as shown in the phantom lines below. Ex. 1103, 9:19-25; *id*., Fig. 11; Ex. 1108, ¶98.

Ex. 1103, Fig. 11
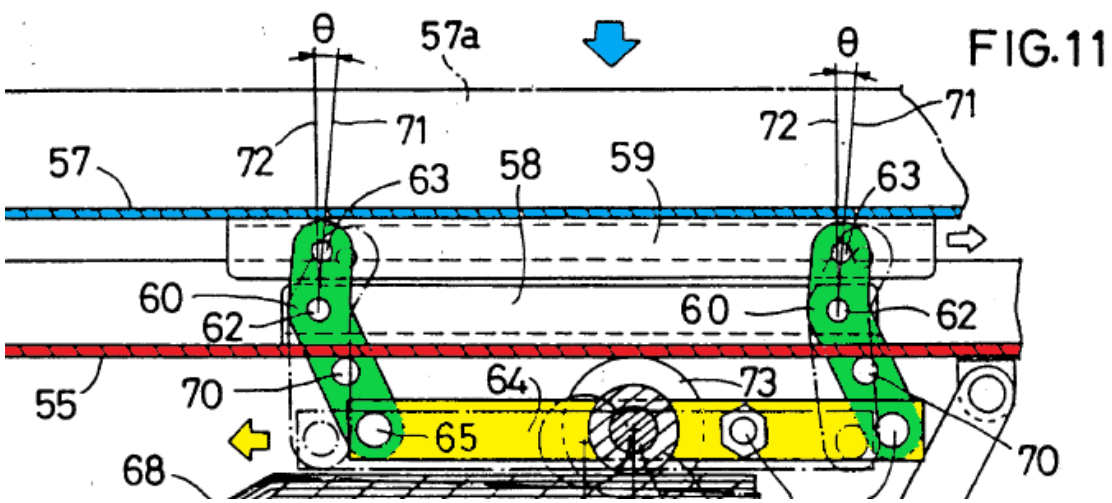

This translation of operating arms 64 is "transmitted through the corresponding pull band 86 to cause the contact pin 85 to move downward against the compression spring 90" a distance that is "generally proportional to the weight of the user." Ex. 1103, 10:13-24. Thus, "the load supporting span of the second tilting control spring 83 is reduced from an initial value of L3" (green below) to "a new one L4" (yellow below). *Id*., 10:19-21; *id*., Fig. 15; Ex. 1108, ¶99.

Ex. 1103, Fig. 15
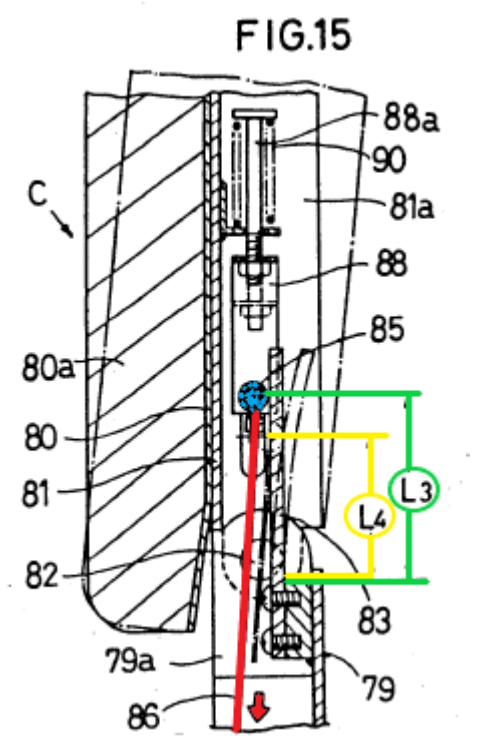

As a result, more force is required to pivot chair back C relative to seat B against the resistance of plate springs 83. Ex. 1108, ¶100. Put another way, the "spring constant of the second tilting control springs 83 is automatically adjusted to suit the weight of the particular user." Ex. 1103, 10:24-26.

Second, in the event "adjusting assembly" is construed as a means-plus-function element, Takamatsu '318 discloses this element. Ex. 1108, ¶101. Prior art discloses a means-plus-function element when it discloses the same or equivalent structure that provides the same function, in substantially the same way, with

substantially the same result. *Regents of Univ. of Minnesota v. AGA Med. Corp.*, 717 F.3d 929, 940-41 (Fed. Cir. 2013).

As for the weighing spring of the "adjusting assembly," Takamatsu '318 discloses "weight responsive compression springs 77" that support seat B against downward movement thereof. Ex. 1103, 8:39-43; Ex. 1108, ¶102. The weight responsive compression springs 77 (below-left in red) are the same as the coil spring 33 disclosed in the '498 Patent (below-right in green). Ex. 1108, ¶102; Ex. 1103, Fig. 8; Ex. 1101, Fig. 3.

Ex. 1103, Fig. 8	Ex. 1101, Fig. 3
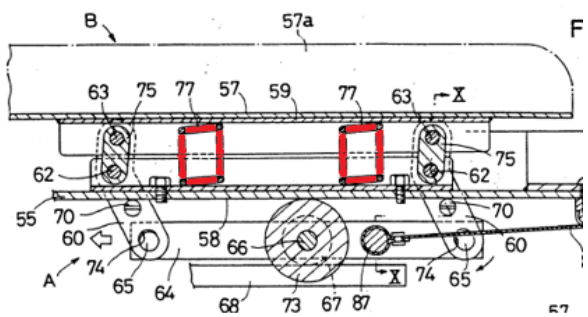	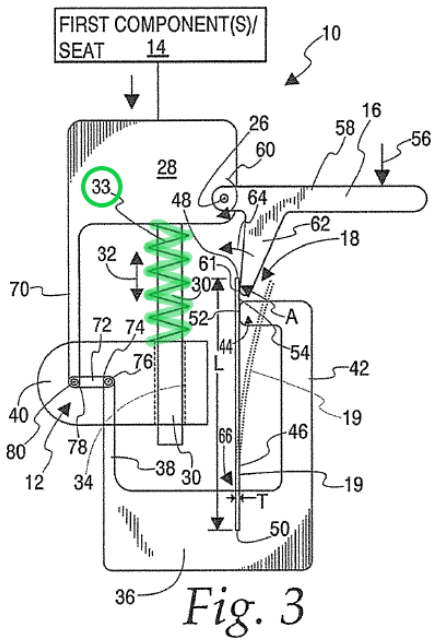

As for the tilting spring of the "adjusting assembly," Takamatsu '318 discloses "second tilting control plate spring[s] 83" that control the tilting of chair

back C relative to seat B. Ex. 1103, 9:37-40. The second tilting control plate springs 83 (below-left in yellow) are the same as leaf spring 19 in the ’498 Patent (below-right in blue). Ex. 1108, ¶103; Ex. 1103, Fig. 12; Ex. 1101, Fig. 3.

Ex. 1103, Fig. 12	Ex. 1101, Fig. 3
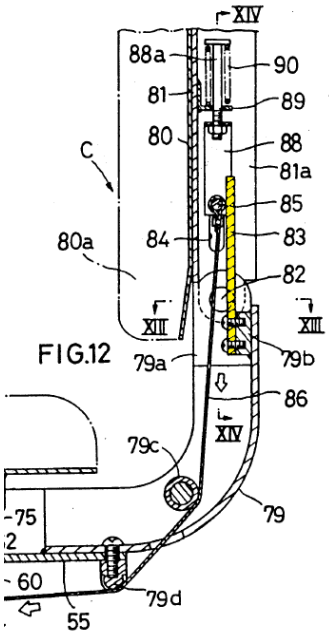	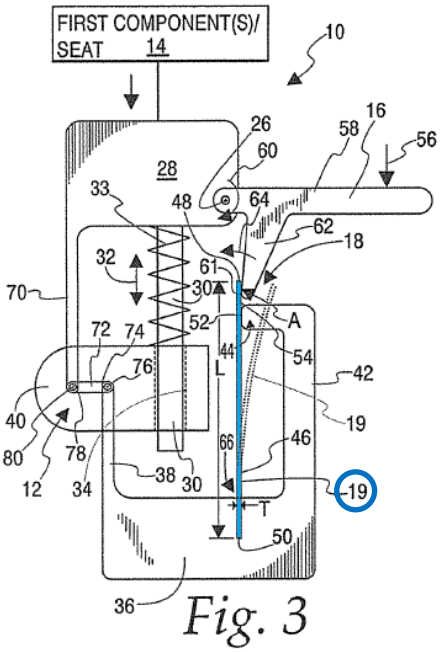

And, as discussed above, these structures provide the claimed function of “configured so that as an incident of the force being applied in the first manner changing in magnitude, the force required to be applied in the second manner to reconfigure the apparatus and move the second component relative to the first component changes in magnitude.” Ex. 1108, ¶¶96-100, 104. In short, “when the user sits on the seat B, the seat plate 57 is displaced downward…against the weight responsive springs 77,” which “causes the bent links 60 to pivot so that their lower

ends are moved forward together with the operating arms 64." Ex. 1103, 9:19-25. This "advancing movement of the operating arm 64 is transmitted through the corresponding pull band 86 to cause the contact pin 85 to move downward against the compression spring 90," such that "the load supporting span of the second tilting control spring 83 is reduced from an initial value L3 to a new one L4," which increases the amount of force required to tilt chair back C relative to seat B. *Id*., 10:13-21; Ex. 1108, ¶100.

2. Dependent Claim 2

> *The reconfigurable apparatus according to claim 1 wherein the second component is guided in pivoting movement relative to the first component around an axis.*

As explained above, chair back C (the second component) is "tiltable rearward about the pins 82" (blue below)—i.e., guided in pivoting movement around an axis—"independently of the tilting of the chair seat B" (the first component). Ex. 1103, 10:6-8; *id*., Fig. 12; Ex. 1108, ¶¶107-109.

Ex. 1103, Fig. 12

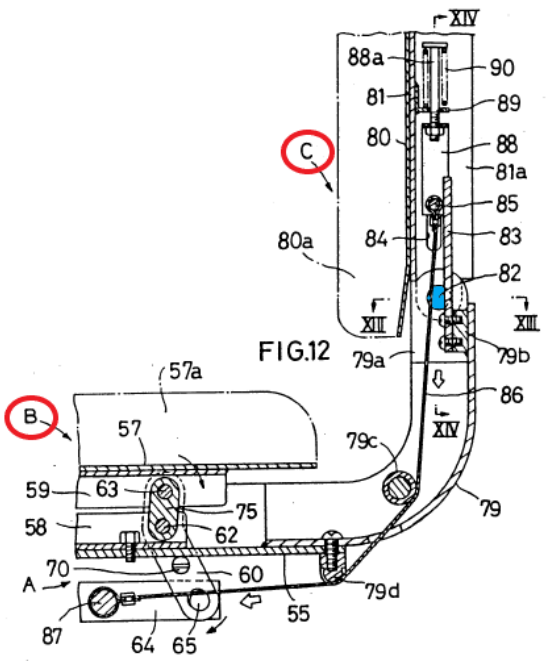

3. Dependent Claim 3

The reconfigurable apparatus according to claim 1 wherein the reconfigurable apparatus is a piece of furniture.

The reconfigurable apparatus of claim 1 is a "rocking chair," which is a piece of furniture. Ex. 1103, 7:46-49; Ex. 1108, ¶¶111-113.

4. Dependent Claim 4

The reconfigurable apparatus according to claim 3 wherein the reconfigurable apparatus is a chair in which a user in the operative position is seated, with the first component comprising a seat upon which a user applies the force in the first manner by sitting in the chair.

As discussed above, the reconfigurable apparatus is a "rocking chair," which is a chair. Ex. 1103, 7:46-49. The first component is "seat B," which is a seat. *Id.*,

7:47-49. Finally, the user is in the "operative position" when seated, and the user applies the force "in the first manner" by sitting in the chair: Takamatsu '318 explains that "when [a] user sits on the seat B," the "seat plate 57 is displaced downward toward the seat base 55 against the weight responsive springs 77." Ex. 1103, 9:19-22; Ex. 1108, ¶¶115-116.

5. Dependent Claim 5

> *The reconfigurable apparatus according to claim 4 wherein the at least second component comprises a back rest against which a user seated in the chair leans to exert the force in the second manner to reconfigure the chair.*

As discussed above, the second component is "chair back C," which is a backrest. Ex. 1103, 9:37-38. In addition, a user seated in the chair leans against chair back C to exert the force "in the second manner" to reconfigure the chair by pivoting chair back C: Takamatsu '318 explains that the "chair back C is tiltable rearward about the pins 82 independently of…the chair seat B," and that "such tilting…is controlled by the second tilting control plate springs 83," which are "elastically deformed upon pivoting of the chair back." Ex. 1103, 10:6-12; Ex. 1108, ¶119.

6. Dependent Claim 6

The reconfigurable apparatus according to claim 5 wherein the adjusting assembly comprises a spring assembly that is configured to exert a force that resists movement of the at least second component relative to the first component and that varies as the magnitude of the force applied in the first manner varies.

As discussed above, the "adjusting assembly" includes "second tilting control plate spring[s] 83" (a spring assembly—green below) that control the tilting of chair back C relative to seat B (movement of the second component relative to the first component). Ex. 1103, 9:37-40; *id*., 10:6-12; *id*., Fig. 15; Ex. 1108, ¶122.

Ex. 1103, Fig. 15

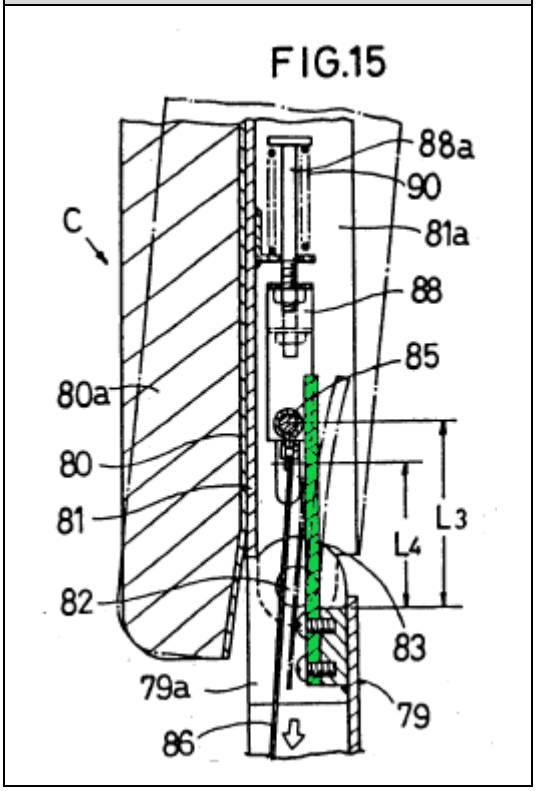

The resisting force of the second tilting control springs 83 varies as the magnitude of the force applied to seat B in the first manner varies. Ex. 1108, ¶123.

As discussed above, "when the user sits on the seat B, the seat plate 57 is displaced downward…against the weight responsive springs 77," which "causes the bent links 60 to pivot so that their lower ends are moved forward together with the operating arms 64." Ex. 1103, 9:19-25. This "advancing movement of the operating arm 64 is transmitted through the corresponding pull band 86 to cause the contact pin 85 to move downward against the compression spring 90," such that "the load supporting span of the second tilting control spring 83 is reduced from an initial value L3 to a new one L4," which increases the amount of force required to tilt chair back C relative to seat B. *Id*., 10:13-21; Ex. 1108, ¶¶124-125. In this way, the "spring constant of the second tilting control springs 83" is "automatically adjusted to suit the weight of the particular user." Ex. 1103, 10:24-26.

7. Dependent Claim 7

> *The reconfigurable apparatus according to claim 6 wherein the spring assembly comprises a leaf spring with a length that is bendable about a fulcrum location and the adjusting assembly and at least second component are configured so that as the force applied in the first manner changes in magnitude an effective length of the leaf spring changes.*

As discussed above, the "spring assembly" includes "second tilting control plate spring[s] 83," which are leaf springs with a length. Ex. 1103, 9:37-40; *id*., 10:6-12; Ex. 1108, ¶129.

In addition, the second tilting control plate springs 83 are bendable about a fulcrum location. Ex. 1108, ¶130. Takamatsu '318 discloses that each "second tilting control plate spring 83" is "bolted at its lower end to the upper end of each back support post 79 via a spacer," and is "elastically deformed" (or bent) "upon pivoting of the chair back." Ex. 1103, 9:55-57; *id*., 10:6-12. As shown below, the fulcrum location (red line below) is the top of the spacer (blue below) about which the plate springs 83 (green below) bend. Ex. 1103, Fig. 15; Ex. 1108, ¶130.

Ex. 1103, Fig. 15

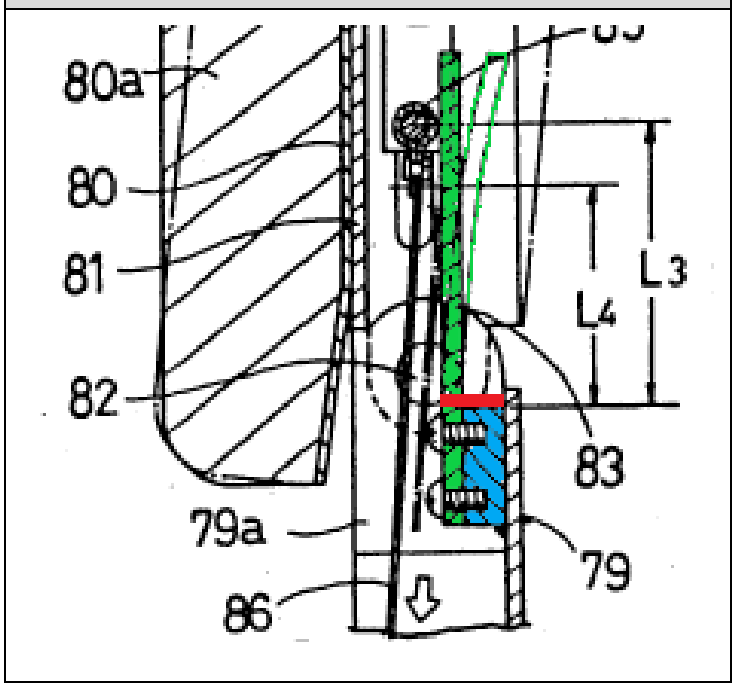

Finally, as discussed above, the effective length of plate springs 83 changes when the force applied in the first manner changes in magnitude. Ex. 1108, ¶131. In short, "[w]hen the seat B is pressed downward under the weight of the user" (the force applied in the first manner), the "contact pin 85 [] move[s] downward" relative

to plate spring 83 such that "the load supporting span of the second tilting control spring[s] 83 is reduced from an initial value L3 to a new one L4." Ex. 1103, 10:13-21. The reduction in the "load supporting span of the second tilting control springs 83" is a change in the effective length thereof. Ex. 1108, ¶131.

8. Dependent Claim 8

> *The reconfigurable apparatus according to claim 1 wherein the adjusting assembly is configured so that an increase in magnitude of the force applied in the first manner causes an increase in magnitude of the force applied in the second manner required to reconfigure the apparatus.*

As explained above, the tilting of chair back C (the second component) relative to seat B (the first component) is controlled by "second tilting control plate spring[s] 83." Ex. 1103, 9:37-40; *id*., 10:6-12. As also explained above, "the spring constant of the second tilting control springs 83 is automatically adjusted to suit the weight of the particular user" (which corresponds to the magnitude of the force applied in the first manner). *Id*., 10:22-26; Ex. 1108, ¶134.

To that end, as explained above, "[w]hen the seat B is pressed downward under the weight of the user…the contact pin 85 [] move[s] downward" such that "the load supporting span of the second tilting control spring[s] 83 is reduced from an initial value L3 to a new one L4." Ex. 1103, 10:13-21. This reduction in the "load supporting span" of the second tilting control springs 83 increases the amount of force required to pivot chair back C relative to seat B. Ex. 1108, ¶135; *see* Ex. 1103,

3:23-25 (the "spring constant of the…second tilting control spring means increases as the weight [of the user sitting in the seat] increases").

9. Dependent Claim 9

The reconfigurable apparatus according to claim 7 wherein the leaf spring has a cross-sectional shape as viewed orthogonally to its length that is non-uniform over at least a portion of the length of the leaf spring.

As explained above, the "leaf spring" is "second tilting control plate spring 83." Ex. 1103, 9:37-40; *id*., 10:6-12. The leaf spring (red below) has a non-uniform cross-sectional shape over at least a portion of its length: Takamatsu '318 discloses that "the second tilting control plate spring 83" has "a progressively reducing width towards its free end." Ex. 1103, 10:46-54; *id*., Fig. 14; Ex. 1108, ¶¶138-139.

Ex. 1103, Fig. 14

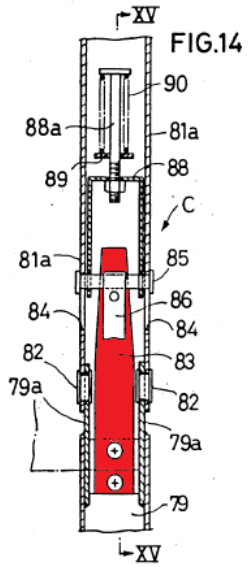

10. Dependent Claim 10

The reconfigurable apparatus according to claim 6 wherein the spring assembly comprises a plurality of leaf springs each with a length that bends around a fulcrum location.

As explained above, the "spring assembly" comprises "second tilting control plate spring[s] 83," which are leaf springs with a length. Ex. 1103, 9:37-40; *id*., 10:6-12; Ex. 1108, ¶142.

There are two plate springs 83: Takamatsu '318 discloses "a pair of back support posts 79," Ex. 1103, 9:43-44, and explains that "a second tilting control plate spring 83…is bolted at its lower end to the upper end of ***each*** back support post 79," *id*., 9:55-57 (emphasis added). Ex. 1108, ¶142.

Finally, as discussed above, the plate springs 83 bend about a fulcrum location. Ex. 1108, ¶143. Each "second tilting control plate spring 83…is bolted at its lower end to the upper end of each back support 79 via spacer." Ex. 1103, 9:55-57. As shown in Figure 15 below, the fulcrum location (red line below) is the top of the spacer (blue below) about which the plate springs 83 (green below) are "elastically deformed." Ex. 1103, 10:6-12; *id*., Fig. 15; Ex. 1108, ¶143.

Ex. 1103, Fig. 15
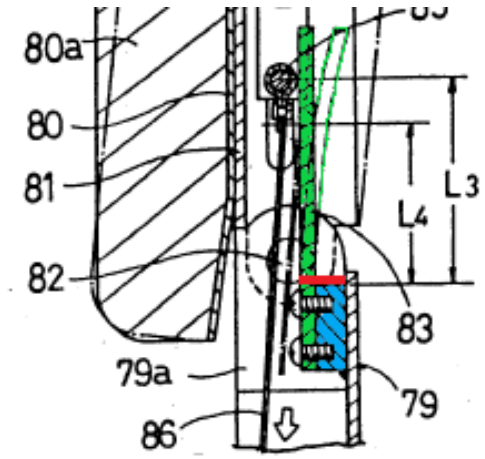

11. Dependent Claim 14

The reconfigurable apparatus according to claim 6 wherein the spring assembly comprises at least one leaf spring.

As explained above, the spring assembly includes "second tilting control plate spring[s] 83" (green below), which is at least one leaf spring. 1103, 9:37-40; *id*., 10:6-12; *id*. Fig. 15; Ex. 1108, ¶146.

Ex. 1103, Fig. 15
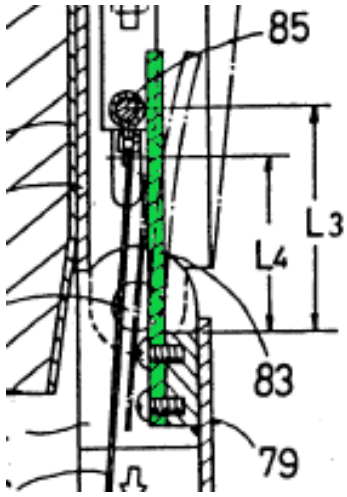

12. Dependent Claim 15

The reconfigurable apparatus according to claim 14 wherein the at least one leaf spring has a length and spaced supported ends and the apparatus further comprises an actuating component that is configured to bear against the one leaf spring between the spaced supported ends to resist movement of the at least second component as the force is applied in the second manner with a magnitude that reconfigures the apparatus.

Takamatsu '318 discloses that the second tilting control plate springs 83, which have a length, can be designed with spaced supported ends. Ex. 1108, ¶¶149-150. Takamatsu '318 explains that "a beam supported at both ends provides a highest spring constant when a load applying point is located at the longitudinal center of the beam." Ex. 1103, 11:7-10. Takamatsu '318 illustrates this concept with "beam-like spring 68a" (red below), which is supported at both ends (blue below). *Id*., 11:10-13; *id*., Fig. 18; Ex. 1108, ¶149.

Ex. 1103, Fig. 18
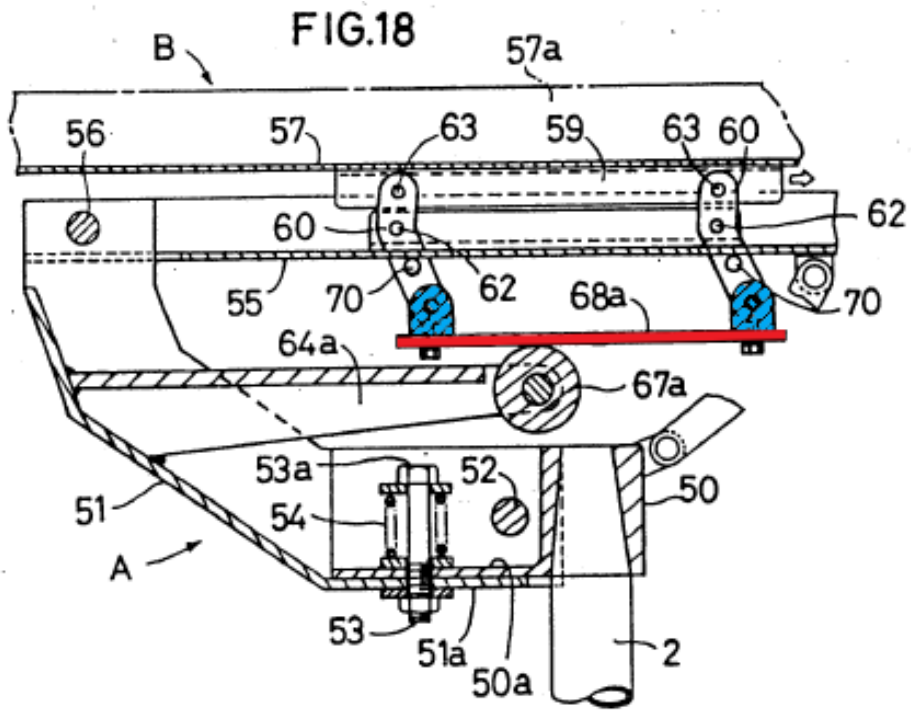

Takamatsu '318 further explains that this concept can be applied to plate springs 83: each "second tilting control spring 83…may be modified to be vertically movable with its ***both ends supported***, whereas the contact pin 85 may be modified to assume a fixed position." Ex. 1103, 11:22-28 (emphasis added). With such a design, "the pin 85 may support a contact roller"—an actuating component—"which comes into rolling contact with the second tilting control spring." *Id*., 11:28-30; Ex. 1108, ¶150.

Finally, when designed as such, second tilting control plate springs 83 resist pivoting of chair back C (the second component) relative to seat B: "tilting of the

chair back C is controlled by the second tilting control plate springs 83." Ex. 1103, 10:6-10; Ex. 1108, ¶151.

13. Dependent Claim 19

The reconfigurable apparatus according to claim 4 wherein the seat is configured to move vertically relative to the frame with the first force applied in the first manner with a magnitude that reaches a predetermined level.

As explained above, "when the user sits on the seat B, the seat plate 57 is displaced downward"—i.e., vertically—"toward the seat base 55 against the weight responsive springs 77" (red below). Ex. 1103, 9:19-22; *id*., Fig. 8; Ex. 1108, ¶¶153-154.

Ex. 1103, Fig. 8

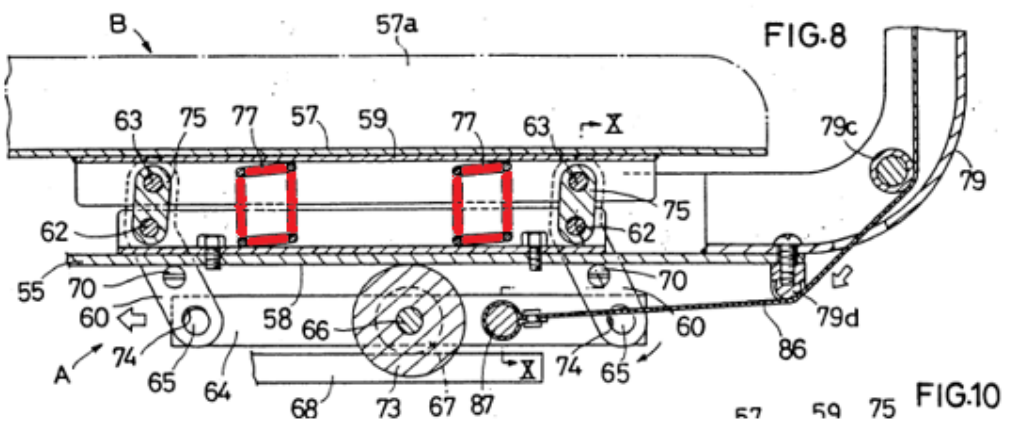

For seat B to move down against the force of springs 77, the weight of the user—the force applied in the first manner—would have to reach a "predetermined level." Ex. 1108, ¶155.

14. Dependent Claim 20

The reconfigurable apparatus according to claim 1 wherein the apparatus further comprises a supporting biasing assembly that normally biasably urges the seat upwardly relative to the frame.

The apparatus includes "weight responsive compression springs 77" (a biasing assembly—red below) that biasably urge the seat upward relative to the frame. Ex. 1103, 8:39-43; *id*., Fig. 8; Ex. 1108, ¶158.

Ex. 1103, Fig. 8

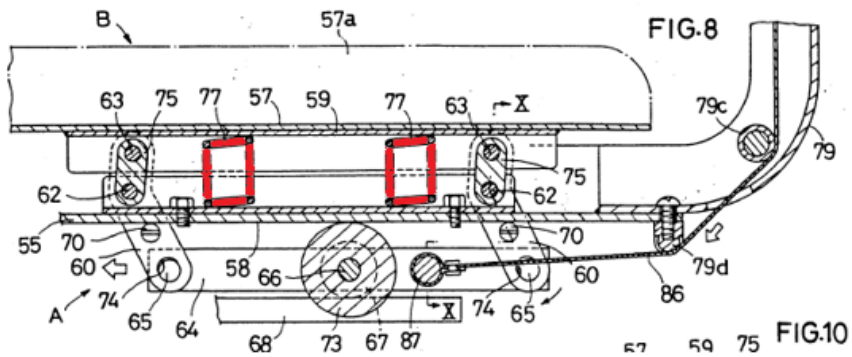

15. Dependent Claim 21

The reconfigurable apparatus according to claim 2 wherein the axis is spaced from the first component.

As explained above, seat B is the first component, and horizontal pins 82 are the axis about which chair back C (the second component) pivots relative to seat B. Ex. 1103, 10:6-8; Ex. 1108, ¶161. As shown below, horizontal pins 82 (blue below) are spaced from seat B. Ex. 1103, Fig. 12; Ex. 1108, ¶161.

Ex. 1103, Fig. 12

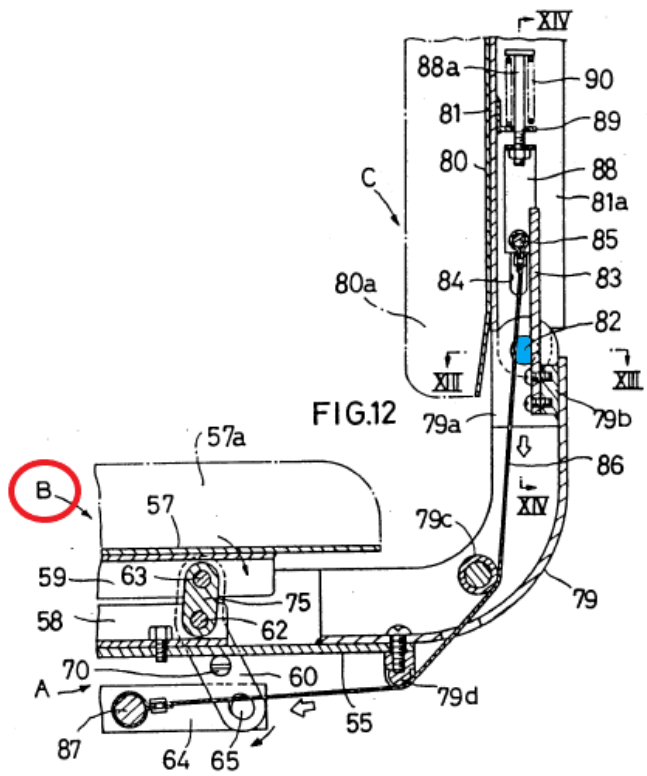

16. Dependent Claim 22

The reconfigurable apparatus according to claim 5 wherein the back rest is spaced from the seat.

As shown below, chair back C is spaced from seat B. Ex. 1103, Fig. 12; Ex. 1108, ¶164.

Ex. 1103, Fig. 12
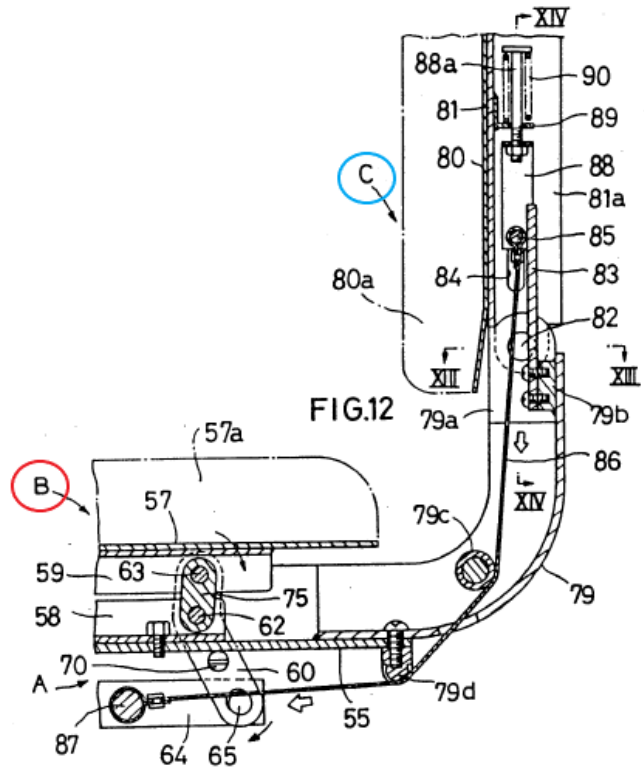

B. Ground II: Claims 1 and 18 are Anticipated by Takamatsu '372

1. Independent Claim 1

[1] A reconfigurable apparatus for supporting at least part of a user's weight with the user in an operative position with respect to the reconfigurable apparatus, the reconfigurable apparatus comprising:

Takamatsu '372 discloses a chair that supports at least part of a user's weight and that can be reconfigured, including by tilting the back of the chair. Ex. 1104, 1:51-57; Ex. 1108, ¶¶166-167.

[1.a] a frame;

Takamatsu ’372 discloses a chair that includes a “support device 3 [which] comprises a fixed frame 6 attached to the upper end of [a] chair leg post 2.” Ex. 1104, 4:6-9. The fixed frame 6 and the chair leg post 2 (both in blue below) are the claimed “frame.” Ex. 1104, Fig. 2; Ex. 1108, ¶¶169-170.

Ex. 1104, Fig. 2

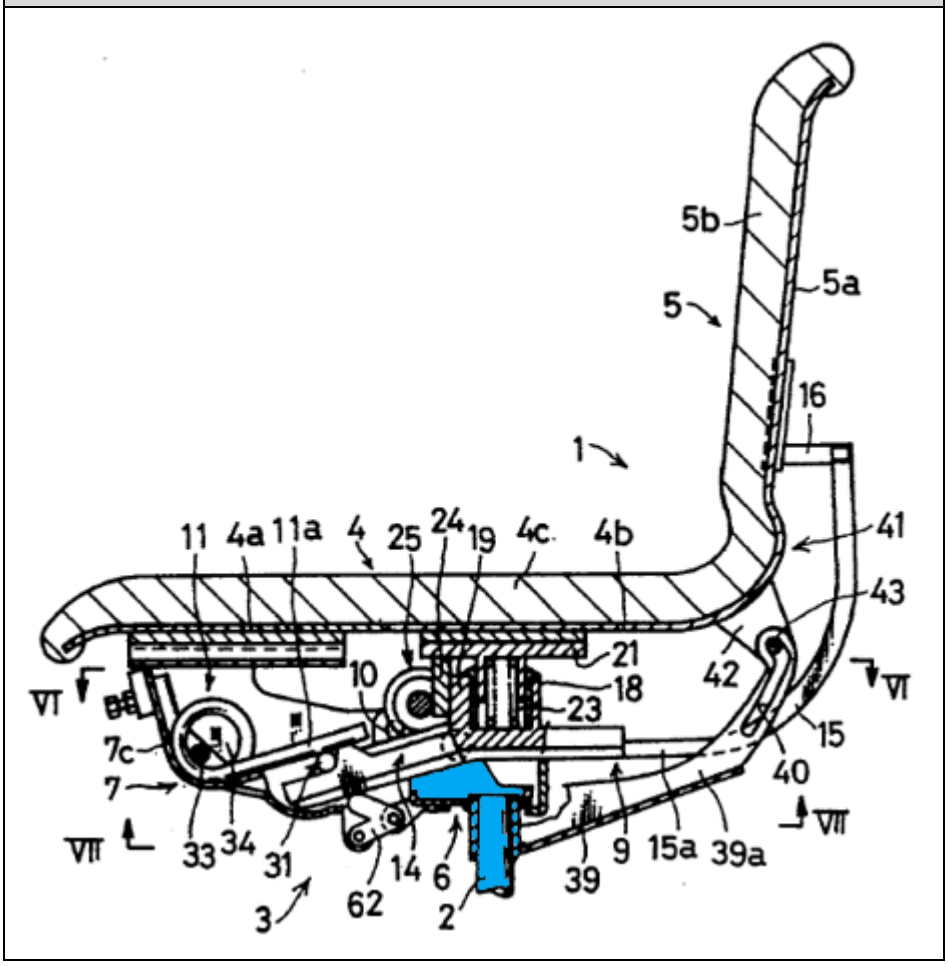

[1.b] a first component on the frame upon which a force is applied by a user in a first manner as an incident of the user assuming the operative position,

Takamatsu '372 discloses a "seat 4" that includes a "seat front carrier plate 4a, a seat tail carrier plate 4b, and a seat cushion 4c." Ex. 1104, 3:60-63. The seat front carrier plate 4a (red below) is the "first component." Ex. 1104, Figs. 2, 5; Ex. 1108, ¶¶172-173.

Ex. 1104, Fig. 2	Ex. 1104, Fig. 5
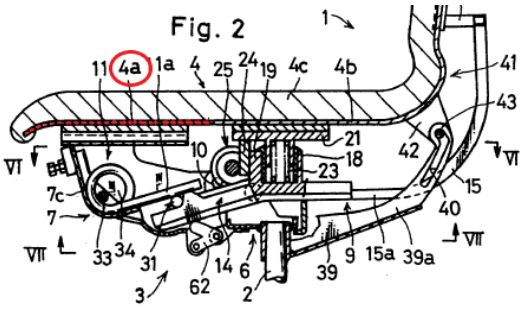	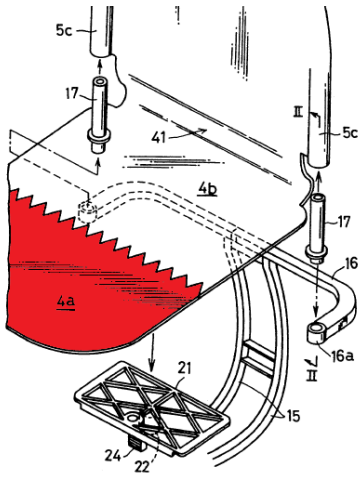

Seat front carrier plate 4a is indirectly supported by fixed frame 6. Ex. 1108, ¶¶174-176; Section IV.B.3.ii *supra* ("on the frame" means "supported directly or indirectly by the frame"). To that end, seat front carrier plate 4a (green below-left) is attached to a "front support plate 38" (blue below-left), which is attached to the "side flanges 7d of the pivotal frame 7" (red below). Ex. 1104, 6:27-30; *id.*, Figs. 8, 3; Ex. 1108, ¶174.

Ex. 1104, Fig. 8	Ex. 1104, Fig. 3
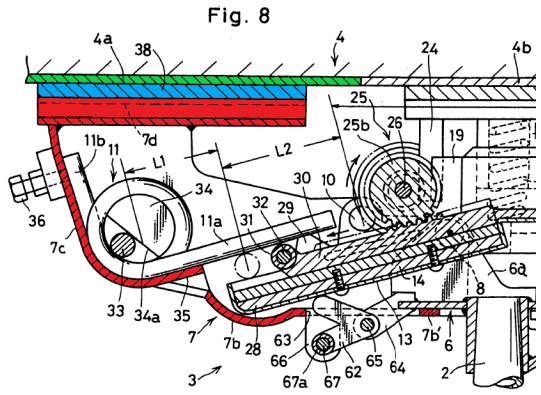	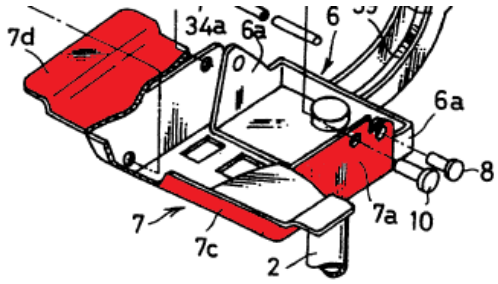

In turn, pivotal frame 7 (red below) is "pivotable about the first pivots 8" (yellow below) "relative to the fixed frame 6" (blue below)—part of the claimed "frame." Ex. 1104, 4:54-56; *id*., Fig. 3; Ex. 1108, ¶¶175-176.

Ex. 1104, Fig. 3
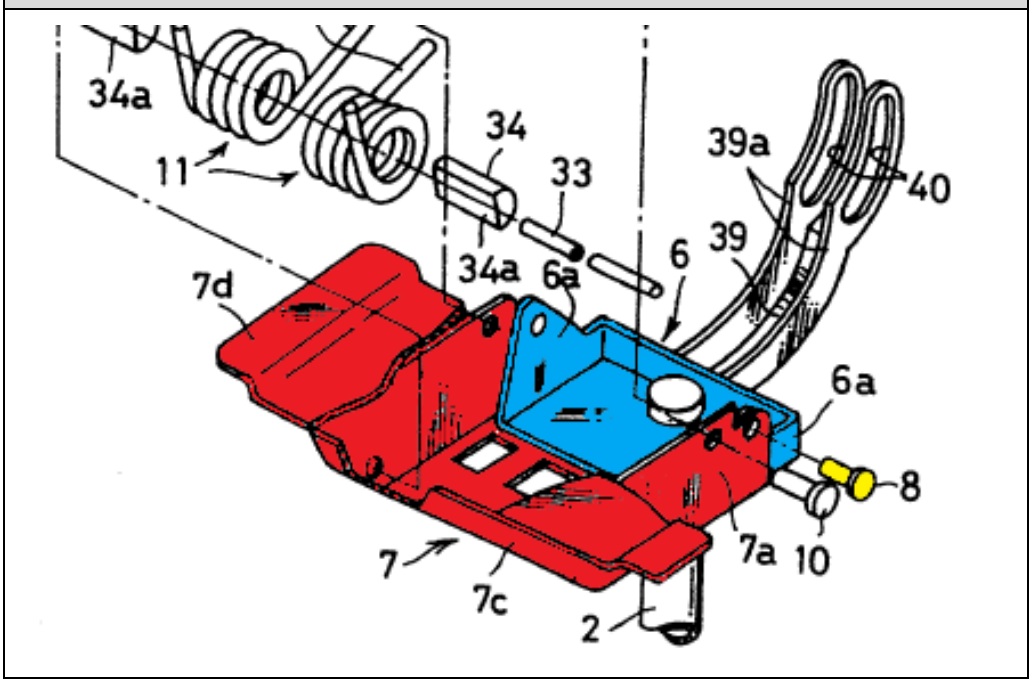

Moreover, a force is applied to seat front carrier plate 4a by a user in a first manner when the user assumes the operative position: "when the user sits on the seat 4," Ex. 1104, 7:13-14,—the user assuming the operative position—a force is applied to seat front carrier plate 4a via cushion 4c. Ex. 1108, ¶¶177-178.

[1.c] at least a second component on the frame that is movable relative to the first component and upon which a force can be applied by a user in the operative position in a second manner to reconfigure the apparatus by moving the at least second component relative to the first component; and

Takamatsu '372 discloses a "seat back 5" (red below)—a second component—that is supported by the frame. Ex. 1104, 3:58-59; *id*., Fig. 2; Ex. 1108, ¶¶180-185; *see* Section IV.B.3.ii, *supra* ("on the frame" means "supported directly or indirectly by the frame").

Ex. 1104, Fig. 2

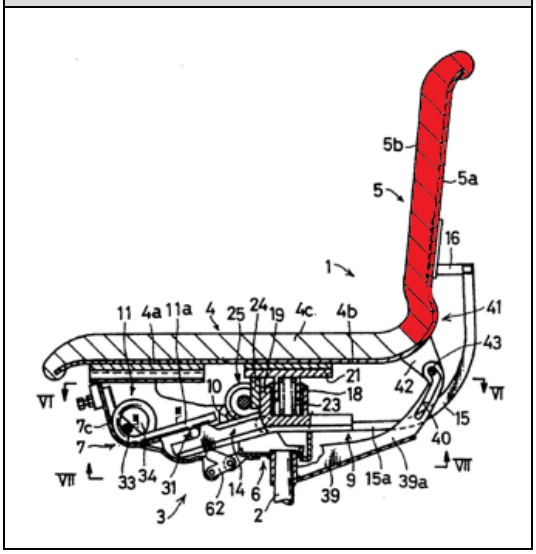

To that end, seat back 5 is connected to a "tiltable member 9." Ex. 1104, 4:24-25; Ex. 1108, ¶182. Tiltable member 9 includes "a pair of generally L-shaped frame bars 15" (green below) attached to a "horizontal connecting bar 16" (blue below). Ex. 1104, 4:35-39, 4:59-62; *id*., Fig. 3; Ex. 1108, ¶182.

Ex. 1104, Fig. 3

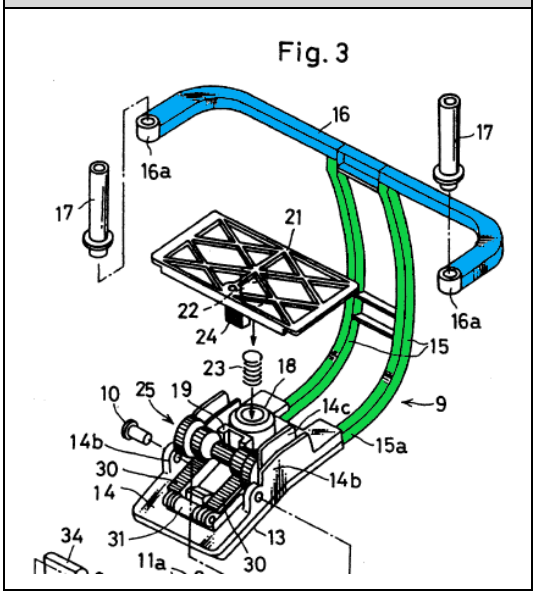

The ends of horizontal connecting bar 16 are provided with "bushes 16a" (red below) that receive "cylindrical member[s] 17" (yellow below) that, in turn, are received in "cylindrical receptacle[s] 5c of the back carrier plate 5a" (green below), which is part of seat back 5. Ex. 1104, 4:62-5:2; *id*., Fig. 5; Ex. 1108, ¶¶182-183.

Ex. 1104, Fig. 5

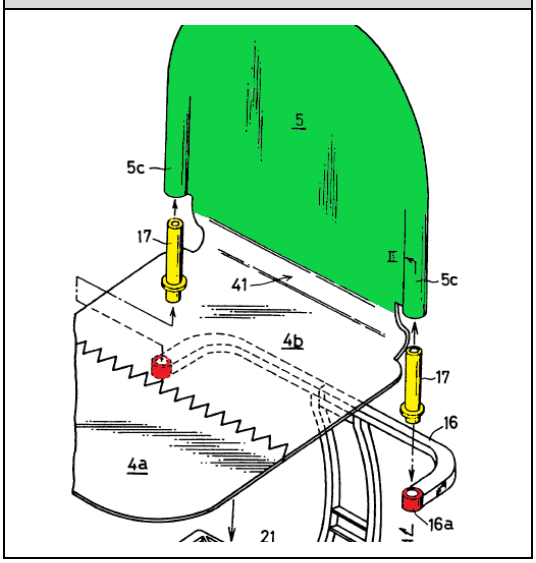

In this way, "seat back 5 is tiltable with the tiltable member 9." Ex. 1104, 5:1-2.

In turn, tiltable member 9 is pivotally connected to pivotal frame 7: a "mechanism carrier 14" of tiltable member 9 "has a pair of upwardly directed outer side brackets 14b" (red below) that are connected to "side walls 7a of the pivotal frame 7" (blue below) by "second pivots 10" (yellow below). Ex. 1104, 4:48-53; *id.*, Fig. 3; Ex. 1108, ¶184.

Ex. 1104, Fig. 3
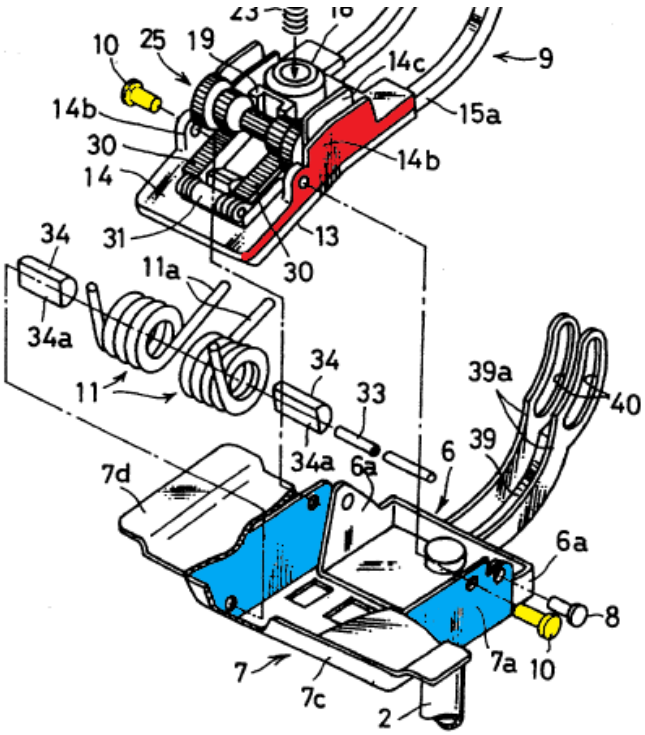

And, as discussed above, pivotal frame 7 is pivotally mounted to fixed frame 6 (part of the claimed frame) via first pivots 8. Ex. 1104, 4:54-56; Ex. 1108, ¶185.

In addition, seat back 5 is tiltable with tiltable member 9 relative to seat front carrier plate 4a in response to a force applied by a user in a "second manner." Ex. 1108, ¶¶186-191. Takamatsu '372 explains that the "seat back" of the invention is "arranged" to "tilt rearwardly" against the support of a "tilting control spring means." Ex. 1104, 1:61-64; Ex. 1108, ¶186.

To that end, the tilting of tiltable member 9, which tilts with seat back 5, "is elastically controlled by a pair of tilting control springs 11," in the form of "torsion coil spring[s]." Ex. 1104, 4:27-31. Each tilting control spring 11 (red below) has "a

load receiving leg 11a and an anchoring leg 11b engaging against the front wall 7c of the pivotal frame 7" (blue below). Ex. 1104, 4:32-34; *id*., Figs. 3, 8; Ex. 1108, ¶187.

Ex. 1104, Fig. 3	**Ex, 1104, Fig. 8**
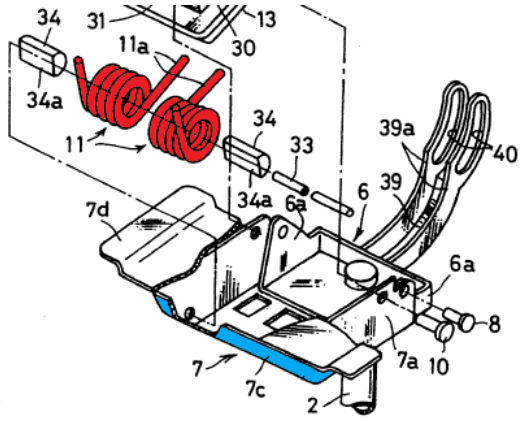	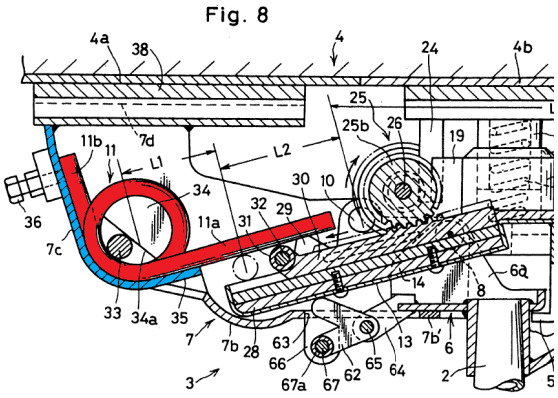

Tiltable member 9 bears against the load receiving legs 11a of each tilting control spring (red below-right) via a "horizontal load applying pin 32" (green below), which is carried by "second racks 30" (blue below), which are received in "second rack guides 28" (yellow below) disposed on mechanism carrier 14 of tiltable member 9. Ex. 1104, 5:49-52, 5:32-35; *id*., Figs. 4, 8; Ex. 1108, ¶188.

Ex. 1104, Fig. 4	Ex. 1104, Fig. 8
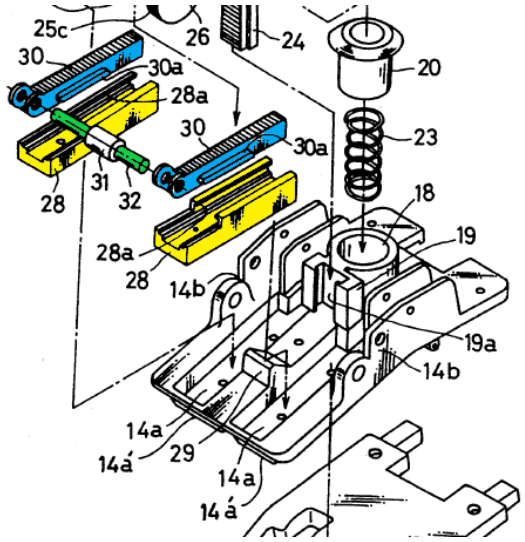	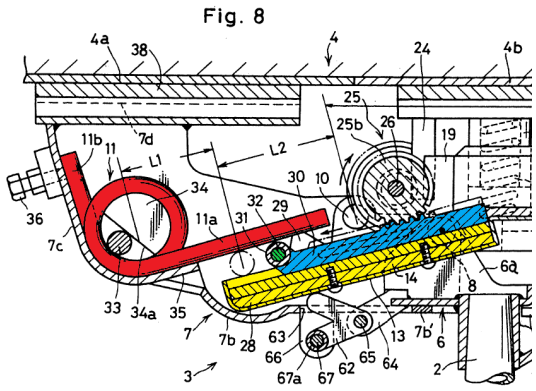

The horizontal load applying pin 32 is also provided with a "load applying roller 31" that directly contacts the load receiving legs 11a of the respective control springs 11. Ex. 1104, 5:49-55; Ex. 1108, ¶189.

Thus, when a user leans against seat back 5—the force being applied in the second manner—"the load receiving legs 11a of the tilting control springs 11 are elastically raised upward by the load applying roller 31," and "the tiltable member 9 together with the seat back 5…is tilted rearwardly downward about the second pivots 10, as shown in Fig. 14." Ex. 1104, 7:31-39; Ex. 1108, ¶190. As shown below, when the user leans back (green arrow below), seat back 5 (red below) pivots relative to seat front carrier plate 4a (blue below), which remains horizontal. Ex. 1104, Fig. 14; Ex. 1108, ¶¶190-191.

Ex. 1104, Fig. 14
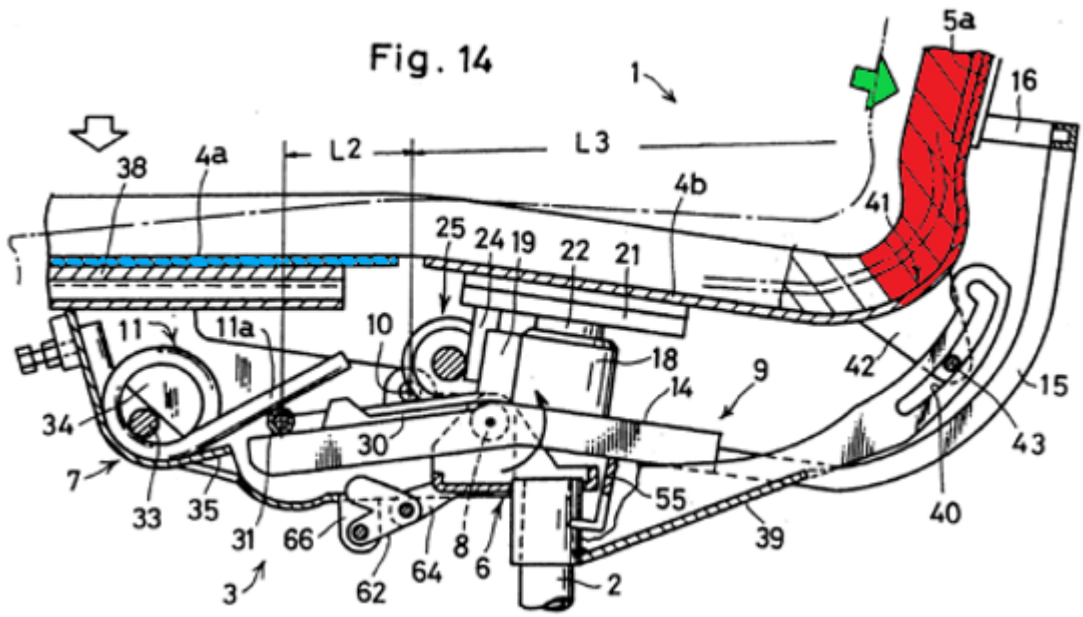

[1.d] an adjusting assembly cooperating between the first component and the at least second component and configured so that as an incident of the force being applied in the first manner changing in magnitude, the force required to be applied in the second manner to reconfigure the apparatus and move the second component relative to the first component changes in magnitude.

As discussed in Section IV.B.3.i above, "adjusting assembly" is properly construed as a means-plus-function claim element under § 112(f). Takamatsu '372 discloses this limitation regardless of MPF construction. Ex. 1108, ¶193.

First, when the force being applied in the first manner changes in magnitude, the force required to move seat back 5 relative to seat front carrier plate 4a changes in magnitude. Ex. 1108, ¶¶194-206. In short, a heavier user moves seat tail carrier

plate 4b down further than a lighter user, such that the effective length of load receiving legs 11a of the tilting control springs 11 is shorter for a heavier user, meaning more force is required for the heavier user to pivot seat back 5 relative to seat front carrier plate 4a. *Id*.

To that end, seat tail carrier plate 4b is attached to a "rear support plate 21." Ex. 1104, 5:8-10. The rear support plate 21 (red below) has a "downwardly directed housing cylinder 22" (blue below) received in "guide bush 20" (green below) that, in turn, is received in a "cylindrical boss 18" (yellow below) formed in mechanism carrier 14 of tiltable member 9. Ex. 1104, 5:3-13; *id*., Fig. 4; Ex. 1108, ¶¶195-196.

Ex. 1104, Fig. 4

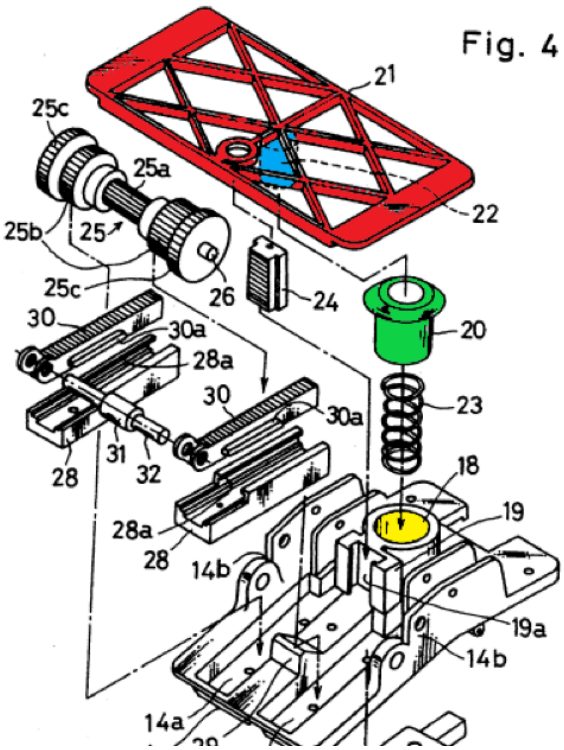

In addition, a "weight responsive coil spring 23" is interposed between seat tail carrier plate 4b and mechanism carrier 14. Ex. 1104, 5:13-15; Ex. 1108, ¶197. Thus, "when the user sits on the seat 4, the seat tail carrier plate 4b…moves downward against the weight responsive spring 23 by an amount substantially proportional to the particular weight of the user." Ex. 1104, 7:13-17; Ex. 1108, ¶198.

This downward movement of seat tail carrier plate 4b shortens the effective length of load receiving legs 11a of the tilting control springs 11. Ex. 1108, ¶¶199-203. To that end, a "first rack 24" (red below) descends down from rear support plate 21 and engages with a "first pinion 25a" (green below), which is part of "pinion assembly 25" mounted on mechanism carrier 14. Ex. 1104, 5:19-31; *id*., Figs. 6, 4. Pinion assembly 25 also includes a "shaft 26" that supports a pair of "second pinions 25b" (blue below), which mesh with the second racks 30 (yellow below) arranged in second rack guides 28 of mechanism carrier 14. *Id*., 5:25-37; *id*., Figs. 6, 4; Ex. 1108, ¶¶199-200.

Ex. 1104, Fig. 6	Ex, 1104, Fig. 4
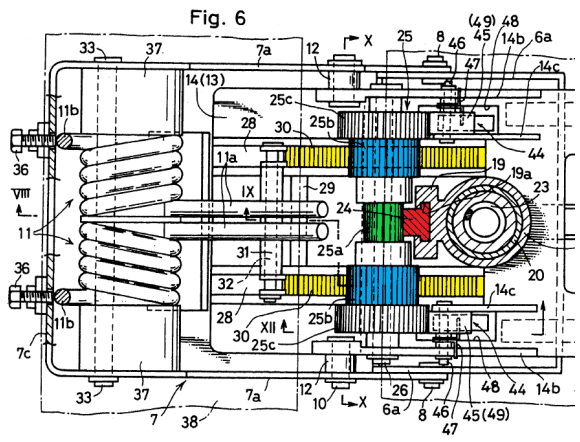	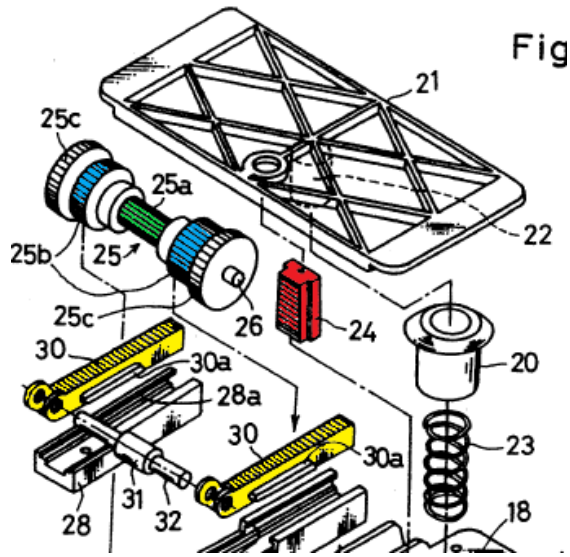

As discussed above, moreover, the horizontal load applying pin 32 that bears against tilting control springs 11 is "carried by the respective second racks 30." Ex. 1104, 5:49-55; Ex. 1108, ¶201. Thus, when seat tail carrier plate 4b moves down against the weight of a user, first rack 24 likewise moves down and "engag[es] with the first pinion 25a, thereby rotating the pinion assembly 25." *Id.*, 7:17-24. This rotation (yellow arrow below) "causes the second racks 30 in mesh with the second pinions 25b to advance" (green arrow below) with the load applying pin 32 (red below), which is carried by the second racks 30. *Id.*; *id.*, Fig. 8; Ex. 1108, ¶¶201-202.

Ex. 1104, Fig. 8
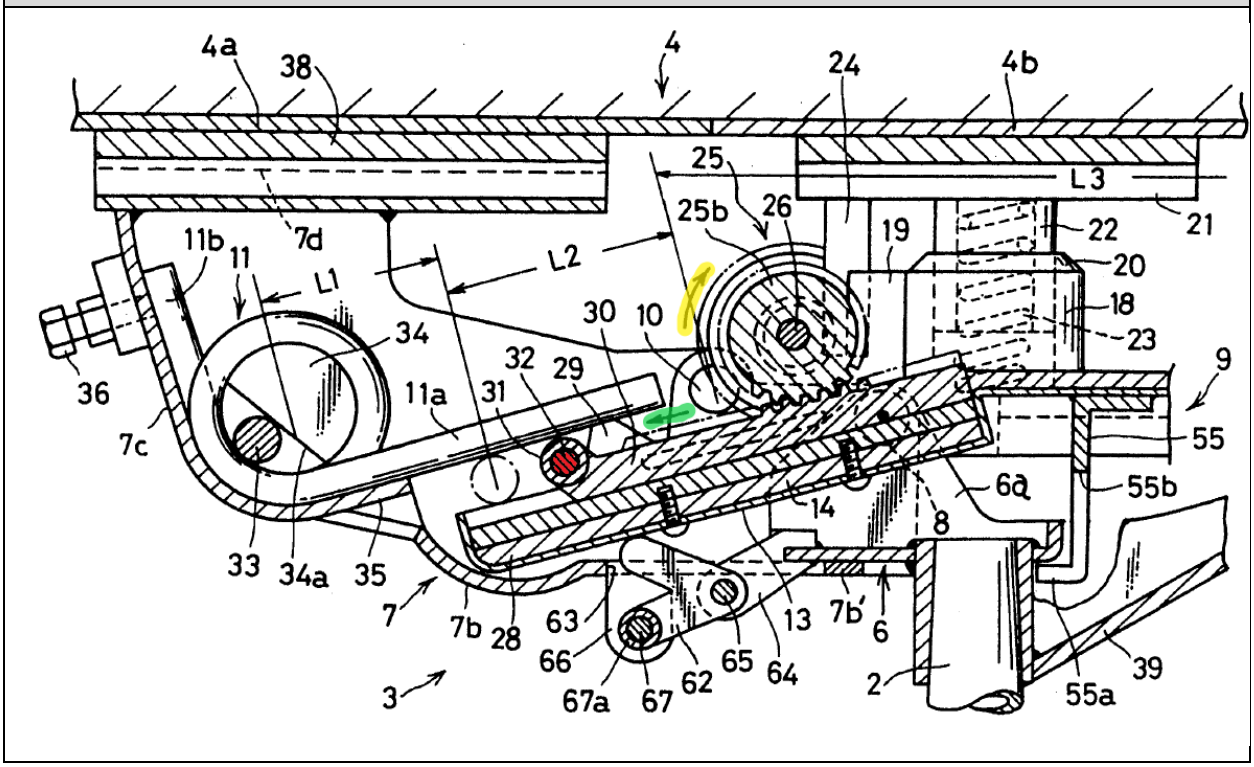

This translation of load applying pin 32 decreases the effective length of load receiving legs 11a of the tilting control springs 11 and increases the amount of force required to tilt seat back 5 relative to seat front carrier plate 4a. Ex. 1108, ¶¶203-206. When the load applying pin 32 (green below), which is carried by second racks 30 (also green), is "advance[d]," the "effective length L1" (orange below) of the "load receiving leg 11a" (red below)—the distance between load applying pin 32 and the center of control springs 11—"reduces generally proportionally to the weight of the user." Ex. 1104, 7:21-30; *id*., Fig. 8; Ex. 1108, ¶203.

Ex. 1104, Fig. 8
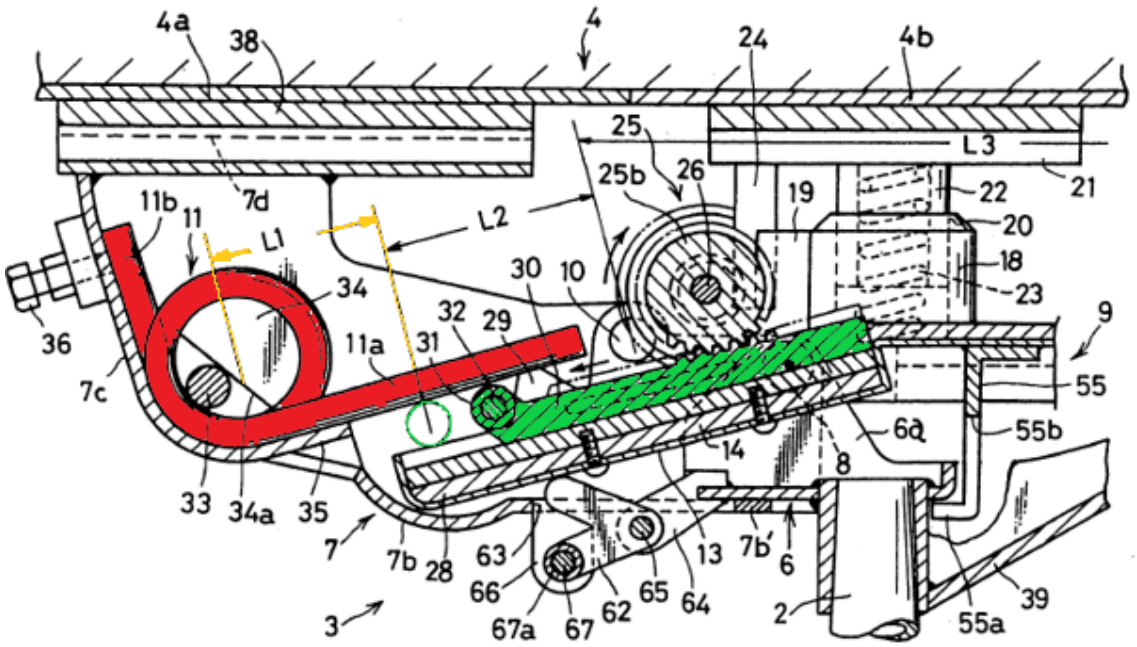

As a result, tilting control springs 11 provide greater resistance to tilting of tiltable member 9 and seat back 5: "the supportive force provided by each tilting control spring 11 is automatically adjusted to suit the weight of the user because the load applying pin 32…is displaced relative to the load receiving leg 11a…proportionally to the weight of the user." Ex. 1104, 7:65-8:4; *see id.*, 8:10-12 ("[T]he tilting control spring 11 provides a larger supportive force for a heavier user than for a lighter user."); Ex. 1108, ¶¶204-206.

Second, in the event "adjusting assembly" is construed as a means-plus-function element, Takamatsu '372 discloses this element. Ex. 1108, ¶207; *Regents of Univ. of Minnesota*, 717 F.3d at 940-41.

As for the weighing spring of the "adjusting assembly," Takamatsu '372 discloses "weight responsive coil spring 23" that allows seat tail carrier plate 4b to move down "by an amount which is substantially proportional to the weight of the user." Ex. 1104, 5:13-18; Ex. 1108, ¶208. The "weight responsive coil spring 23" (below-left in red) is the same as the coil spring 33 disclosed in the '498 Patent (below-right in green). Ex. 1108, ¶208; Ex. 1104, Fig. 4; Ex. 1101, Fig. 3.

Ex. 1104, Fig. 4	Ex. 1101, Fig. 3
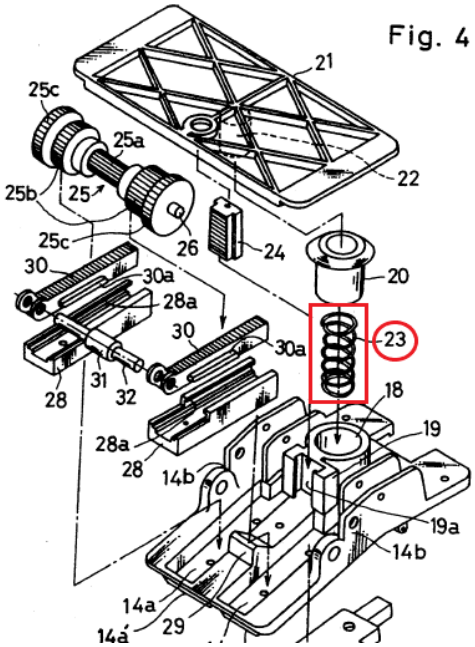	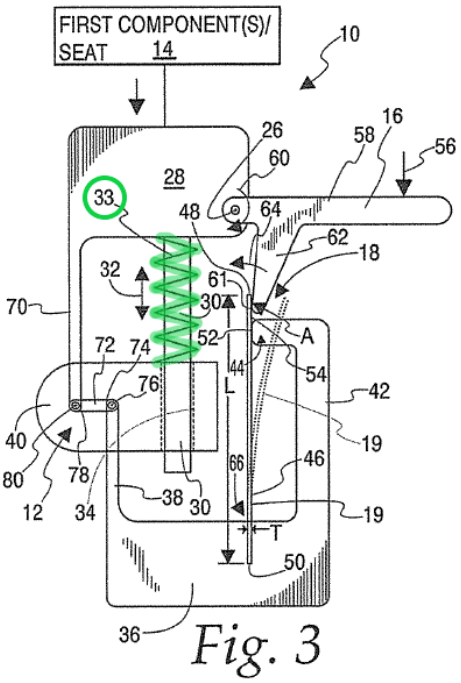

As for the tilting spring of the "adjusting assembly," Takamatsu '372 discloses torsion coil springs 11, which elastically control "rearward tilting of the seat back 5." Ex. 1104, 7:35-39; Ex. 1108, ¶209. The torsion coil springs 11 (below-

left in red) are equivalent to leaf spring 19 disclosed in the ’498 Patent (below-right in blue). Ex. 1108, ¶209; Ex. 1104, Fig. 3; Ex. 1101, Fig. 3.

Ex. 1104, Fig. 3	Ex. 1101, Fig. 3
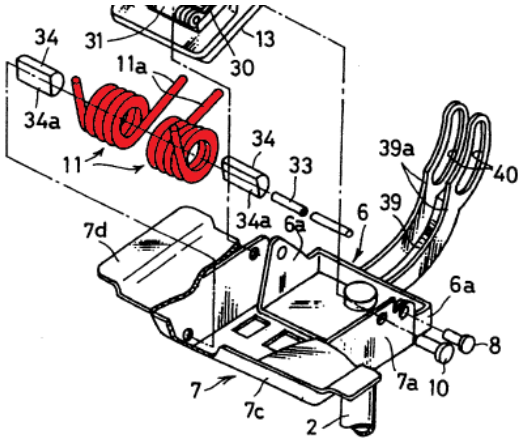	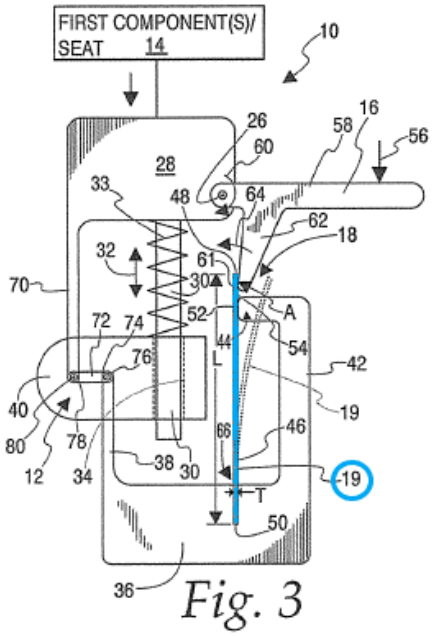

Any differences between the two structures are insubstantial: they provide the same function in substantially the same way (resiliently flexing against a tilting force) to provide substantially the same result (providing variable resistance to that force). Ex. 1108, ¶210.

And, as discussed above, these structures provide the claimed function of “configured so that as an incident of the force being applied in the first manner changing in magnitude, the force required to be applied in the second manner to reconfigure the apparatus and move the second component relative to the first

component changes in magnitude." Ex. 1108, ¶¶194-206, 211. In short, "when the user sits on the seat 4, the seat tail carrier plate 4b of the seat 4 moves downward," which rotates pinion assembly 25, "caus[ing] the second racks 30 in mesh with the second pinions 25b to advance with the load applying pin 32" such that "the effective length L1…of the load receiving leg 11a of each tilting control spring 11…reduces generally proportionally to the weight of the user." Ex. 1104, 7:13-30.

2. Dependent Claim 18

> *The reconfigurable apparatus according to claim 1 wherein the adjusting assembly comprises cooperating toothed elements that move relative to each other as a magnitude of the force applied in the first manner reaches a predetermined level.*

As discussed above, Takamatsu '372 discloses toothed elements first rack 24 (red below), first pinion 25a (green below), second pinions 25b (blue below), and second racks 30 (yellow below). Ex. 1104, 5:19-37; *id*., Fig. 4; Ex. 1108, ¶215.

Ex. 1104, Fig. 4
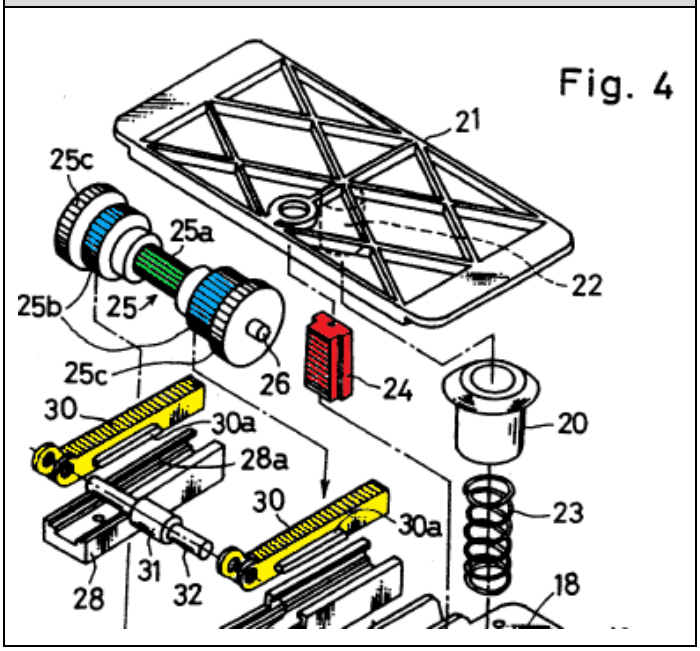

These elements cooperate and move relative to each other when the magnitude of the force applied in the first manner reaches a predetermined level. Ex. 1108, ¶¶216-218. When a user sits in the seat, the "downward movement of the seat tail carrier plate 4b" causes "downward movement of the first rack 24," which "engag[es] with the first pinion 25a, thereby rotating the pinion assembly 25." Ex. 1104, 7:17-24. This rotation "causes the second racks 30 in mesh with the second pinions 25b to advance with the load applying pin 32," which is carried by the second racks 30. *Id.*; Ex. 1108, ¶216.

For seat tail carrier plate 4b to "move[] downward against the weight responsive spring 23," the force applied in the first manner would need to reach a "predetermined level." Ex. 1108, ¶217.

C. Ground III: Claim 18 Would Have Been Obvious at the Time of Alleged Invention in View of the Combination of Takamatsu ’318 and Takamatsu ’372

Claim 18 depends from claim 1 and further recites “wherein the adjusting assembly comprises ***cooperating toothed elements*** that move relative to each other as a magnitude of the force applied in the first manner reaches a predetermined level.” Ex. 1101, 14:21-25 (emphasis added). As discussed in Section VII.A.1 above, Takamatsu ’318 discloses the elements of claim 1 of the ’498 Patent. And as discussed in Section VII.B.2 above, the rack gears and pinion gears of Takamatsu ’372 disclose the “cooperating toothed elements” of claim 18. At the time of the alleged invention of the ’498 Patent, it would have been obvious to a PHOSITA to use the rack and pinion gears of Takamatsu ’372 with the mechanism of Takamatsu ’318. Such a modification merely requires simple substitution of one known element for another to obtain predictable results, and a PHOSITA would have been motivated to make this substitution in view of the express teachings of the prior art. This modification, moreover, would have been well within the skill of a PHOSITA, and a PHOSITA would have had a reasonable expectation of success in making it.

1. Using the Rack and Pinion Gears of Takamatsu ’372 with Takamatsu ’318 Is Merely a Simple Substitution of One Known Element for Another

Combining Takamatsu ’318 and Takamatsu ’372 merely requires substituting the rack and pinion gears of Takamatsu ’372 for the pivoting bent links of Takamatsu

’318 to obtain predictable results. This combination would have been obvious at the time of the alleged invention. MPEP § 2143.I.B; *Agrizap, Inc. v. Woodstream Corp.*, 520 F.3d 1337, 1344 (Fed. Cir. 2008) (simple substitution of one known element for another presented “strong prima facie case of obviousness”); *see also HTC Corp. v. Advanced Audio Devices, LLC*, IPR2014-01155, Paper 6 at 11-16 (PTAB Dec. 30, 2014) (instituting IPR involving combination of analogous references from the “same inventors”).

Takamatsu ’318 and Takamatsu ’372 disclose seating mechanisms with the same goal: automatically adjusting the tilting resistance on the backrest based on the user’s weight. Ex. 1108, ¶223. To this end, the mechanisms operate similarly: their seats move down when a user sits, and the mechanisms convert this downward movement into substantially horizontal movement of another component, which shortens the effective length of a spring element that resists tilting of the backrest. *Id*. The mechanisms, however, use different components to achieve this: Takamatsu ’318 uses bent pivoting links, and Takamatsu ’372 uses rack gears and pinion gears. *Id*.

Takamatsu ’318, for its part, converts downward movement of seat B into a shorter effective length of the tilting control plate springs 83. Ex. 1108, ¶224. As discussed above, “when the user sits on the seat B, the seat plate 57 is displaced downward toward the seat base 55 against the weight responsive springs 77,” which

"causes the bent links 60 to pivot so that their lower ends are moved forward together with the operating arms 64." Ex. 1103, 9:19-25. As a result, a "pull band 86," connected to operating arms 64 on one end and to contact pins 85 on the other, pulls on contact pins 85, "caus[ing] [them] to move downward against [a] compression spring 90" such that "the load supporting span of the second tilting control spring 83 is reduced from an initial value L3 to a new one L4." *Id.*, 10:13-21. The phantom lines in Figure 11 below show how the pivoting of bent links 60 (green below) pulls operating arms 64 (yellow) forward, thus converting downward vertical motion of seat B (blue arrow) into horizontal motion of the operating arms (yellow arrow). Ex. 1103, Fig. 11; Ex. 1108, ¶¶225-226.

Ex. 1103, Fig. 11

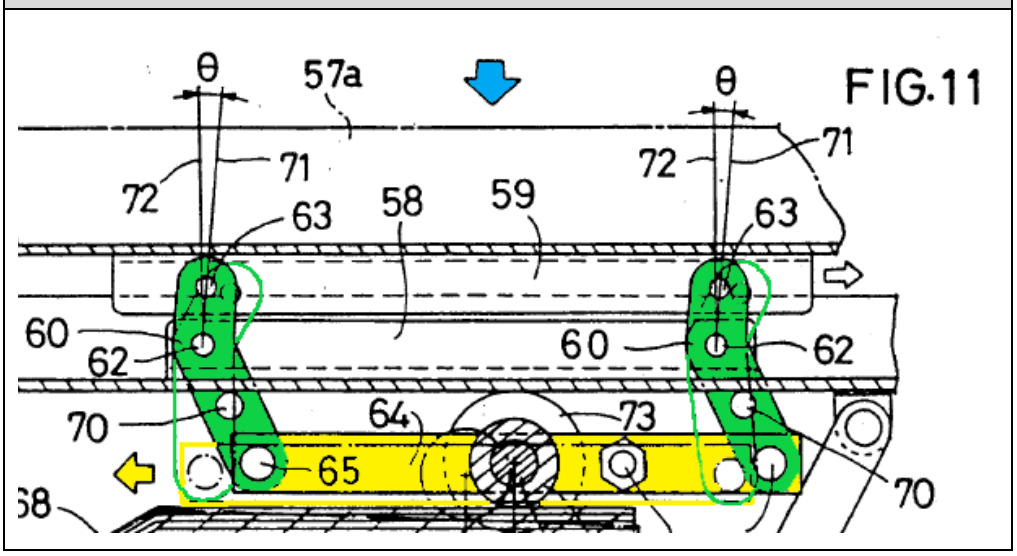

Takamatsu '372, for its part, converts downward movement of the seat tail carrier plate 4b into a shorter effective length of the load receiving legs 11a of the

tilting control springs 11 that resist tilting of seat back 5. Ex. 1108, ¶227. As discussed above, when the user sits on seat 4, "seat tail carrier plate 4b…moves downward" with a "first rack 24" that "engag[es] with the first pinion 25a, thereby rotating the pinion assembly 25," which includes second pinions 25b. Ex. 1104, 7:13-23. This rotation "causes the second racks 30 in mesh with the second pinions 25b to advance with the load applying pin 32" such that "the effective length L1…of the load receiving leg 11a of each tilting control spring 11…reduces generally proportionally to the weight of the user." *Id*., 7:21-30. Figure 8, below, shows how the rotational movement of pinion assembly 25 (yellow-highlighted arrow)—which is caused by downward movement of seat tail carrier plate 4b—causes substantially horizontal movement (green-highlighted arrow) of load applying pin 32 (red below). Ex. 1104, Fig. 8; Ex. 1108, ¶¶227-229.

Ex. 1104, Fig. 8
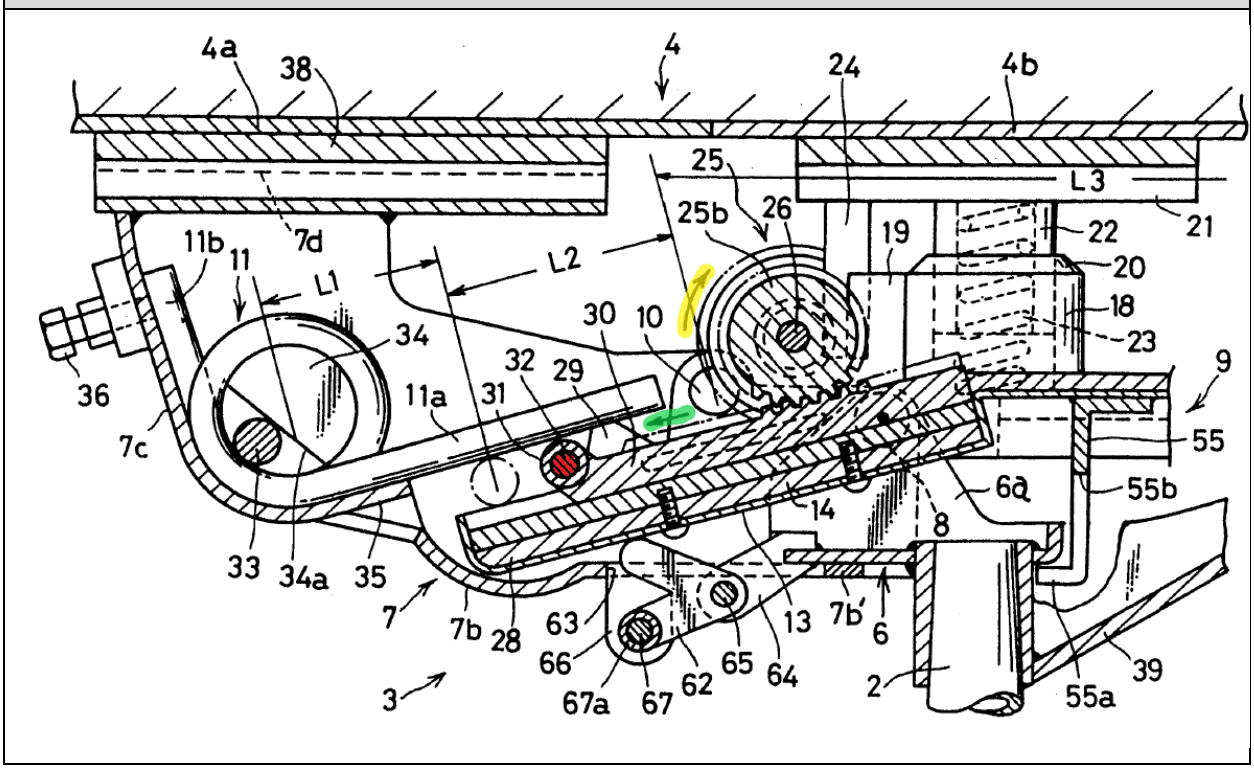

In short, the mechanisms of Takamatsu ’318 and Takamatsu ’372 both convert vertical movement of a seat component into substantially horizontal movement of another component to increase tilting resistance, but they do so using different components—pivoting bent links and rack and pinion gears, respectively. Ex. 1108, ¶230. A PHOSITA, therefore, would have considered the teachings of both references when designing a weight-sensitive mechanism for adjusting tilting resistance. *Id.*, ¶231; *Tyco Healthcare Grp. LP v. Ethicon Endo-Surgery, Inc.*, 774 F.3d 968, 978 (Fed. Cir. 2014) (finding it would have been obvious to combine references that were “clearly within a common field of endeavor”).

Moreover, using the rack and pinion gears of Takamatsu ’372 in lieu of the pivoting bent links of Takamatsu ’318 merely requires substituting one known element for another to obtain predictable results. Ex. 1108, ¶239. The use of rack and pinion gears to convert vertical motion of one component into horizontal motion of another was well known in the art of weight-sensitive seating mechanisms. *Id*., ¶240. In addition to Takamatsu ’372, the Schmitz ’637 reference (Ex. 1105) cited during prosecution of the ’498 Patent discloses a “toothed slide 86, or linear/curvilinear rack or gear” (green below) that cooperates with a “toothed quadrant 87, or rotary gear” (red below) to convert vertical movement of a seat component into horizontal movement of a fulcrum component (25a) to increase the amount of force required to pivot the seat shell and its backrest against a leaf spring (20a). Ex. 1105, ¶71; *id*., Fig. 7e; Ex. 1108, ¶240.

Ex. 1105, Fig. 7e
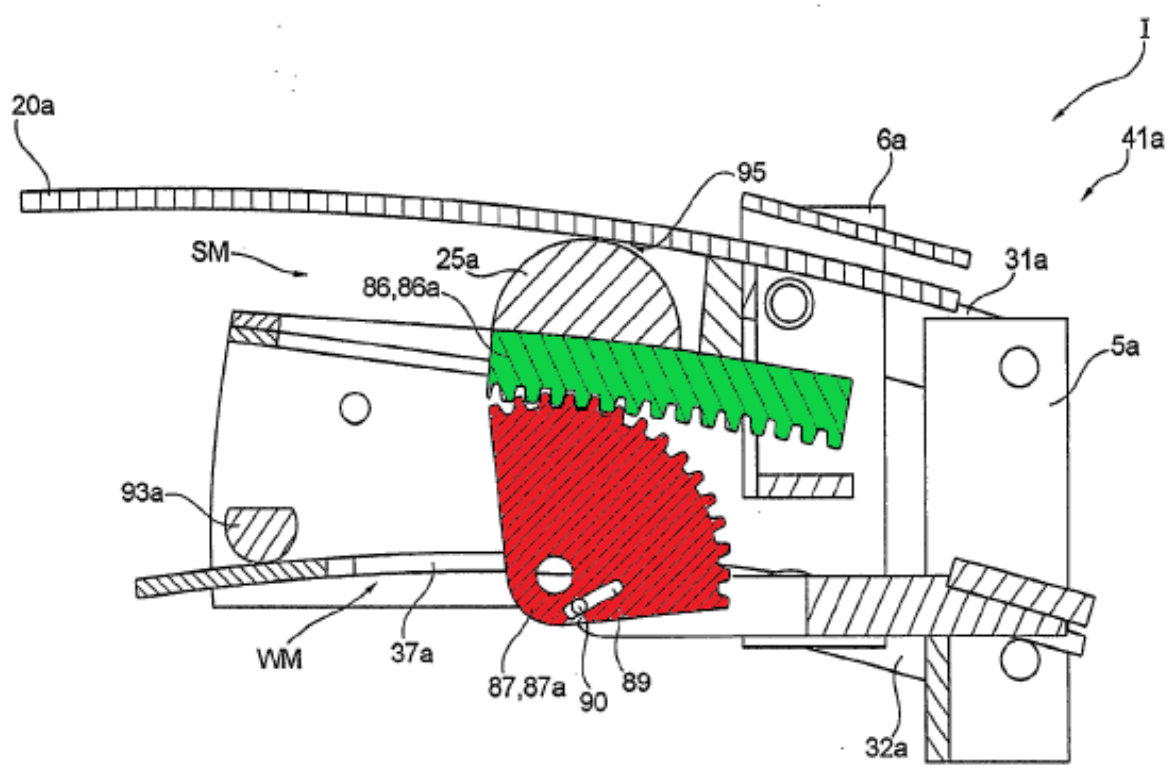

More particularly, "[w]hen the seat 7 is loaded with a weight force, the upper part 6a, on which the seat 7 is supported…is lowered slightly," which "causes a rotation of the toothed quadrant 87" such that it "meshes with[] the toothed slide 86 and the support 25a"—the fulcrum—and "translates this support to the left in the direction of the free end 23a of the leaf spring," which resists tilting of the seat 7 and its backrest. Ex. 1105, ¶71; Ex. 1108, ¶241.

As another example, the Lee reference, published February 16, 2012 (Ex. 1106, 1) discloses a weight-sensitive seating mechanism that uses rack and pinion gears to convert vertical movement of a seat into horizontal movement of a backrest.

Ex. 1108, ¶243. To that end, Lee discloses a "vertical rack gear 710," a "pinion gear 730" (yellow below), a "vertical bevel gear 740" (green below), a "horizontal bevel gear 750," a "spur gear 760" (blue below), and a "horizontal rack gear 770" (red below). Ex. 1106, ¶38; *id*., Fig. 5; *see* Ex. 1107, Fig. 5; Ex. 1108, ¶244.

Ex. 1107, Fig. 5[2]

[Fig. 5]

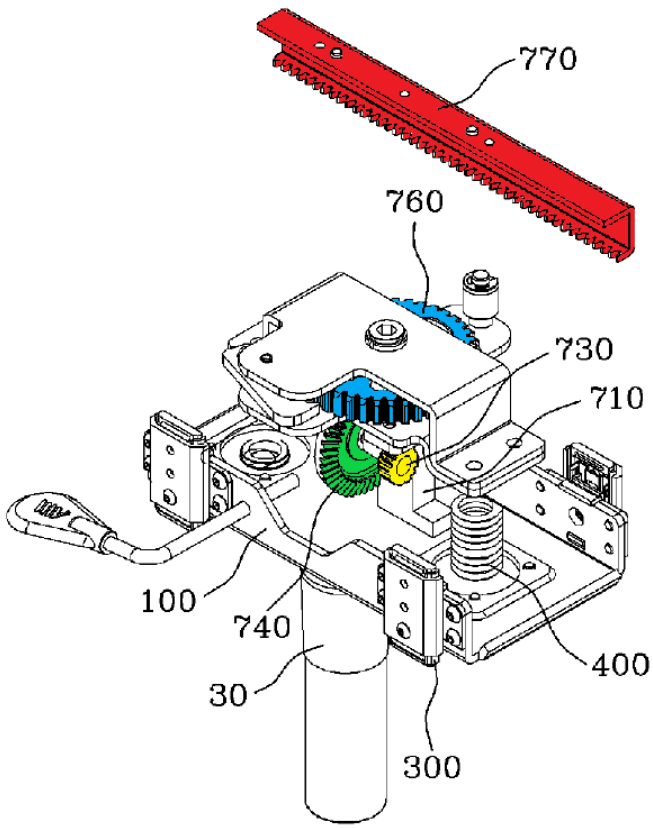

[2] The annotated figure is from the PCT publication of Lee (Ex. 1107), which has the same figures in a higher resolution. *See* Ex. 1108, ¶244 n.1.

Through interaction of Lee's gears, downward movement of the seat is converted into horizontal movement of the horizontal rack gear 770, which is attached to the backrest. Ex. 1106, ¶¶32, 39-40; Ex. 1108, ¶245.

A PHOSITA, therefore, would have considered rack and pinion gears well-known components for converting vertical movement of a seat component into horizontal movement of another component in the context of weight-sensitive seating mechanisms. Ex. 1108, ¶246. Thus, it would have been obvious to a PHOSITA at the time of the alleged invention to substitute such gears (as taught in Takamatsu '372) for the pivoting bent links of Takamatsu '318, and doing so would have yielded a predictable result: namely, as applied to the mechanism of Takamatsu '318, the rack gears and pinion gears would convert vertical movement of seat B into horizontal movement of operating arms 64, thereby shortening the effective length of second tilting control plate springs 83 and increasing the amount of force required to tilt chair back C relative to seat B. Ex. 1108, ¶¶246, 251.

As discussed below, moreover, the express teachings of both Takamatsu '318 and Takamatsu '372 would have motivated a PHOSITA to make this substitution.

2. Express Teachings of Takamatsu '318 and Takamatsu '372 Would Have Motivated a PHOSITA to Combine the References

The express teachings of the prior art would have motivated a PHOSITA to substitute the rack and pinion gears of Takamatsu '372 for the pivoting bent links of

Takamatsu ’318. Ex. 1108, ¶¶232-238. An express goal of Takamatsu ’318 is to achieve increased sensitivity to variations in the weights of different users, and Takamatsu ’372 teaches that its rack and pinion gears provide superior sensitivity.

First, Takamatsu ’318 teaches that an “object” of its “invention is to make the automatic adjustment of the spring constant [of tilting control springs] ***highly sensitive*** to weight variations.” Ex. 1103, 1:64-66 (emphasis added). In other words, Takamatsu ’318 teaches that the automatic adjustment of the tilting resistance should be very responsive, or sensitive, to users of different weights. Ex. 1108, ¶232.

Second, the rack and pinion gears of Takamatsu ’372 provide increased sensitivity to weight variations. Ex. 1108, ¶233. To achieve increased sensitivity, the mechanism must be able to convert relatively small vertical movements of the seat component (caused by small variations in weight) into perceivable changes in tilting resistance on the backrest. *Id*., ¶¶233-234.

The rack and pinion gears of Takamatsu ’372 accomplish this. Because of the ratio of the diameter of the second pinions 25b (blue below) to the diameter of the first pinion 25a (green below), a relatively small downward movement of the seat (and thus rack 24 (red below)) can produce a significant horizontal movement of second racks 30 (yellow below), and thus load applying pin 32. Ex. 1108, ¶233; Ex. 1104, Fig. 4.

Ex. 1104, Fig. 4
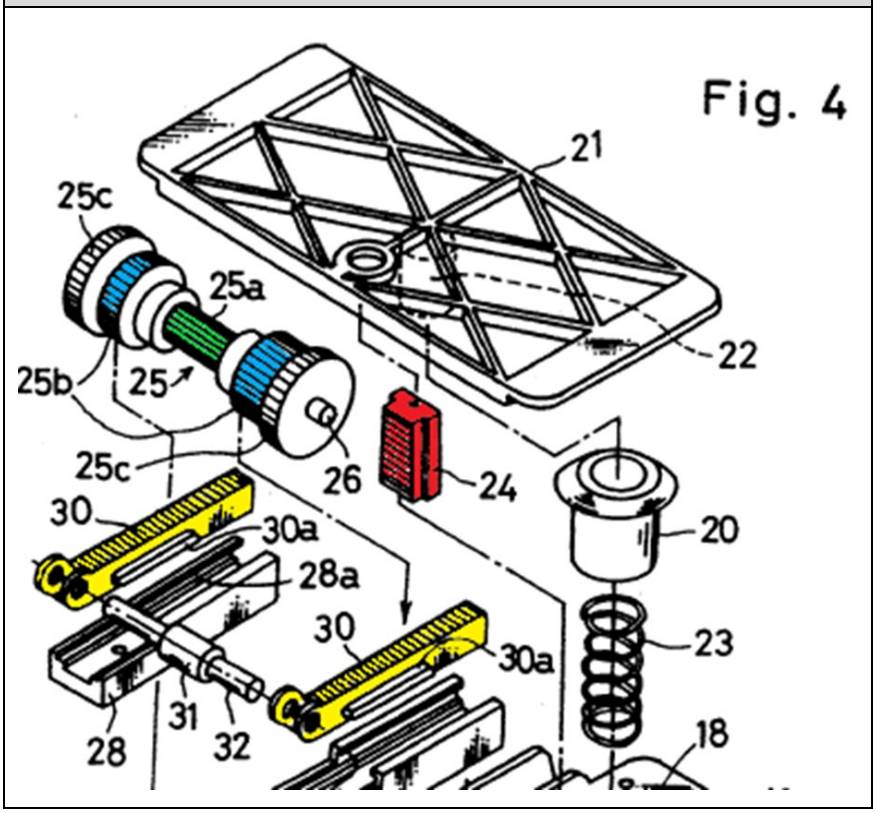

Thus, even a small change in the weight of the user can effect a perceivable change in the tilting resistance (due to the shortening of the effective length of load receiving legs 11a of the tilting control springs 11). Ex. 1108, ¶234. As Takamatsu '372 explains, "the second pinions 25b…are diametrically larger than the first pinion 25a" such that "the advancing stroke of the second racks 30…can be rendered larger than the downward stroke of the first rack 24." Ex. 1104, 8:45-52. Thus, "it is possible to ***increase the sensitivity*** in automatically adjusting the supportive force of the tilting control springs 11 against tilting of the tiltable member 9 (namely, the seat back 5)." *Id*., 8:52-56 (emphasis added).

Schmitz ’637 likewise teaches that the use of rack and pinion gears can yield increased sensitivity: a “step-up of the weighing movement”—the vertical displacement of the seat—“takes place in the movement converter 41a”—which is comprised of rack and pinion gears—such that “even with a small weighing movement, a ***sensitive*** setting of the spring mechanism SM”—the springs that resist pivoting of the seat—“can be carried out.” Ex. 1105, ¶73 (emphasis added); Ex. 1108, ¶242.

A PHOSITA would understand, moreover, that rack and pinion gears can provide greater sensitivity than pivoting links in view of design constraints on seating mechanisms. Ex. 1108, ¶235. Seating mechanisms must be relatively compact to be practical for use and manufacture. *Id*., ¶236. For instance, Takamatsu ’318 touts that a benefit of its mechanism is that it can be “arranged…in a space-saving manner” such that its chair is “relatively compact.” Ex. 1103, 2:51-57.

But bent links cannot provide optimal sensitivity within these constraints. Ex. 1108, ¶¶235-236. As shown in Figure 11 of Takamatsu ’318, when the bent links 60 (green below), pivot in response to vertical displacement of seat B, the horizontal displacement of operating arms 64 (yellow below) caused by the pivoting is not significantly larger than the vertical displacement of Seat B. Ex. 1103, Fig. 11; Ex. 1108, ¶235.

Ex. 1103, Fig. 11
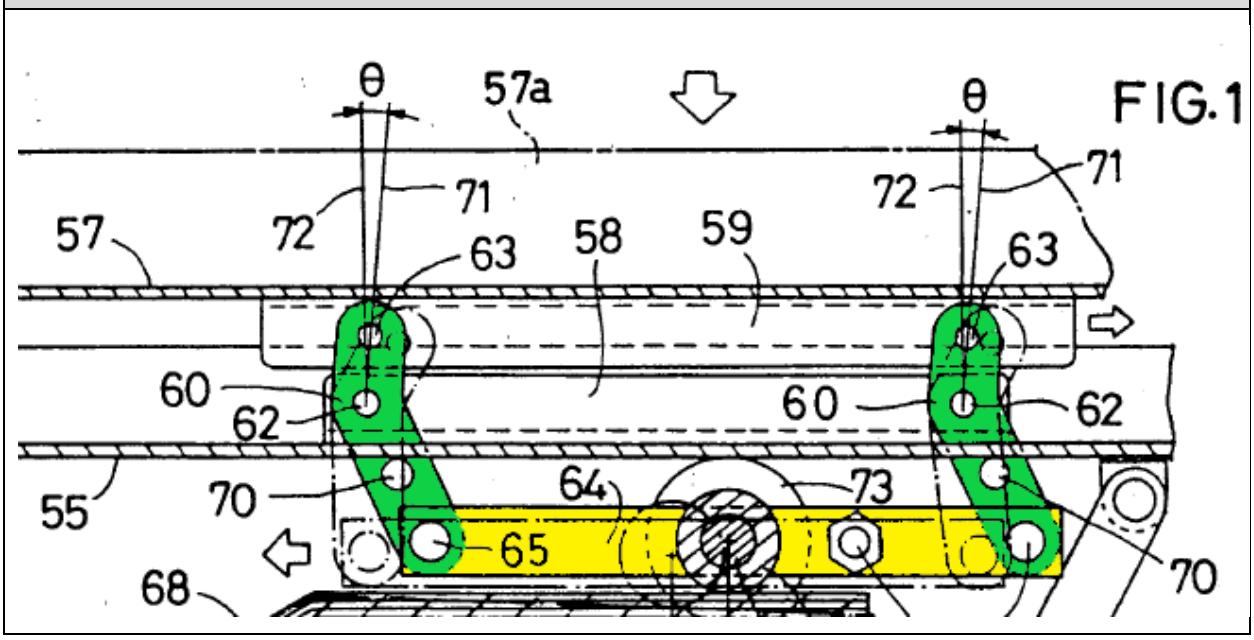

Nor can bent links be modified to achieve significantly increased sensitivity. To do so, a PHOSITA would have to increase the length of bent links such that the ratio of horizontal movement to vertical movement is larger. Ex. 1108, ¶236. But to accommodate significantly longer bent links, the seating mechanism would have to be impractically large. *Id*.

In contrast, rack and pinion gears can provide optimal sensitivity without significantly increasing the size of the overall mechanism. Ex. 1108, ¶237. For instance, if the diameter of the first pinion 25a is reduced, the sensitivity of the mechanism can be increased without increasing the size of the mechanism at all. *Id*.

In sum, Takamatsu ’318 expressly teaches it is beneficial to increase the sensitivity of a weight-responsive tilting mechanism to weights of different users,

and Takamatsu ’372 teaches that its rack and pinion gears provide superior sensitivity in a compact assembly. A PHOSITA, therefore, would be motivated to substitute the rack and pinion gears of Takamatsu ’372 for the bent links of Takamatsu ’318. Ex. 1108, ¶238.

As discussed below, moreover, a PHOSITA would have a reasonable expectation of success in making this substitution.

3. A PHOSITA Would Have Had a Reasonable Expectation of Success in Combining Takamatsu ’318 and Takamatsu ’372

Substituting the rack and pinion gears of Takamatsu ’372 for the bent links of Takamatsu ’318 would have been well within the skill of a PHOSITA at the time of the alleged invention of the ’498 Patent, and a PHOSITA would have had a reasonable expectation of success in making the combination. Ex. 1108, ¶248. The substitution merely incorporates the well-known structures of rack and pinion gears with no change in their ordinary and well-known function, and does not otherwise interfere with any other aspects of the mechanism of Takamatsu ’318. *Id*.

The model below demonstrates one example of how the rack and pinion gears of Takamatsu ’372 could be implemented with the mechanism of Takamatsu ’318. Ex. 1108, ¶¶249-250. As shown in the illustrations below, a vertical rack 75 could be mounted to the bottom of seat plate 57 to engage with a first pinion gear 62 of a pinion assembly mounted on seat base 55. *Id*., ¶250. The pinion assembly could

further include second pinions 63 that mesh with horizontal rack gears 60 mounted onto each operating arm 64. *Id*.

Ex. 1108, ¶250, Illustration 1	**Ex. 1108, ¶250, Illustration 2**
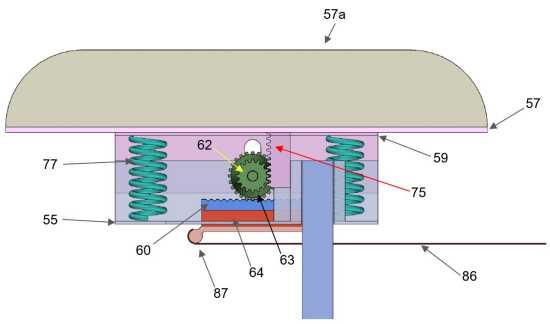	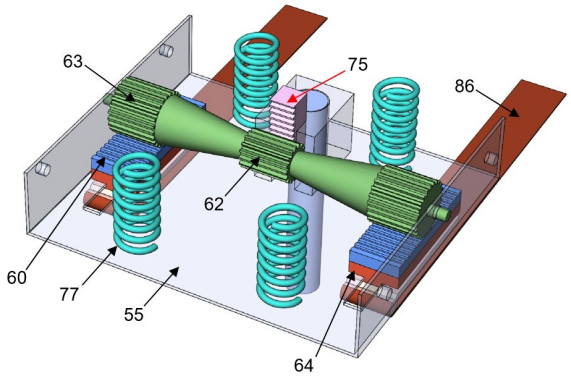

In this way, when seat B moves down against the force of compression springs 77, the vertical rack 75 rotates the pinion assembly, which causes the horizontal racks 60 and operating arms 64 to translate horizontally toward the front of the chair. Ex. 1108, ¶251. Operating arms 64 pull on pull bands 86 in the same manner as described in Takamatsu ’318, thereby reducing the effecting length of second tilting control springs 83 and increasing the tilting resistance on chair back C. Ex. 1108, ¶251; Ex. 1103, 10:13-26.[3]

---

[3] This model is just one example of how Takamatsu ’318 and Takamatsu ’372 could be combined. A PHOSITA would have known that the same combination of elements could be implemented in a variety of ways. Ex. 1108, ¶249.

Moreover, any other modifications necessary to substitute the rack and pinion gears of Takamatsu ’372 for the bent links of Takamatsu ’318 would be within the skill of a PHOSITA at the time of the alleged invention of the ’498 Patent, and making this substitution would not interfere with other aspects of the mechanism of Takamatsu ’318. Ex. 1108, ¶¶252-253. Thus, a PHOSITA would have had a reasonable expectation of success in making this substitution.

4. Claim 18 Would Have Been Obvious at the Time of Alleged Invention

In sum, using the rack and pinion gears of Takamatsu ’372 in lieu of the pivoting links of Takamatsu ’318 merely requires substituting one well-known element for another to obtain predicable results. A PHOSITA would have been motivated to make this substitution in view of the express teachings of both references related to achieving increased sensitivity to users of different weights. And making the substitution would have been well within the skill of a PHOSITA, such that a PHOSITA would have had a reasonable expectation of success in making the combination at the time of the alleged invention of the ’498 Patent.

The combination, moreover, discloses the limitations of claim 18. Takamatsu ’318 discloses the elements of claim 1. Using rack and pinion gears with the mechanism of Takamatsu ’318, instead of pivoting links, likewise discloses the elements of claim 1 because the pivoting links are not themselves required by the

claim. Ex. 1108, ¶¶255-256. And the rack and pinion gears in this combination disclose the "cooperating toothed elements" limitation of claim 18, as discussed in Section VII.B.2 above. Ex. 1108, ¶257.

Claim 18, therefore, would have been obvious at the time of alleged invention of the '498 Patent in view of Takamatsu '318 in combination with Takamatsu '372. *Stone Strong, LLC v. Del Zotto Prods. of Fla., Inc.*, 455 Fed. App'x 964, 970-71 (Fed. Cir. 2011) ("[B]ecause the [challenged] patents represent no more than the predictable use of prior art elements to address a known problem, their claims are obvious as a matter of law.").

VIII. CONCLUSION

For these reasons, *inter partes* review of Claims 1-10, 14-15, and 18-22 of U.S. Patent No. 10,292,498 should be instituted, and Claims 1-10, 14-15, and 18-22 should be canceled.

BANNER & WITCOFF, LTD.

Dated: September 20, 2023

By: */Erik Maurer/*
Erik Maurer
Reg. No. 48,648

Attorney for Petitioner,
MillerKnoll, Inc.

CERTIFICATION UNDER 37 C.F.R. § 42.24(d)

Pursuant to 37 C.F.R. § 42.24(a)(1)(i), I certify that this paper includes 12,883 words. In accordance with 37 C.F.R. § 42.24(a)(1), this word count does not include a count of the words in a table of contents, a table of authorities, mandatory notices under § 42.8, a certificate of service or word count, or appendix of exhibits or claim listing. Furthermore, in accordance with 37 C.F.R. § 42.24(d), this word count is the word count of the word-processing system used to prepare the paper.

BANNER & WITCOFF, LTD.

Dated: September 20, 2023

By: */Erik Maurer/*

Erik Maurer
Reg. No. 48,648
Banner & Witcoff, LTD.
71 S. Wacker Dr. Ste. 3600
Chicago, IL 60606

CERTIFICATE OF SERVICE

Pursuant to 37 C.F.R. § 42.105, I hereby certify that I caused a true and correct copy of the Petition for *Inter Partes* Review in connection with U.S. Patent No. 10,292,498 and supporting evidence to be served via FedEx Priority Overnight on September 20, 2023, on the following:

Morgan, Lewis & Bockius LLP (PA)
1400 Page Mill Road
Palo Alto, CA 94304-1124

Scott M. Padiak
1170 TERRACE CT
GLENCOE, IL 60022-1241

BANNER & WITCOFF, LTD.

Dated: September 20, 2023

By: */Erik Maurer/*
Erik Maurer
Reg. No. 48,648
Banner & Witcoff, LTD.
71 S. Wacker Dr. Ste. 3600
Chicago, IL 60606

CLAIM LISTING APPENDIX

U.S. Pat. No. 10,292,498

Designation	Claim Language
Claim 1	
1	1. A reconfigurable apparatus for supporting at least part of a user's weight with the user in an operative position with respect to the reconfigurable apparatus, the reconfigurable apparatus comprising:
[1.a]	a frame,
[1.b]	a first component on the frame upon which a force is applied by a user in a first manner as an incident of the user assuming the operative position,
[1.c]	at least a second component on the frame that is movable relative to the first component and upon which a force can be applied by a user in the operative position in a second manner to reconfigure the apparatus by moving the at least second component relative to the first component; and
[1.d]	an adjusting assembly cooperating between the first component and the at least second component and configured so that as an incident of the force being applied in the first manner changing in magnitude, the force required to be applied in the second manner to reconfigure the apparatus and move the second component relative to the first component changes in magnitude.
Claim 2	
2	2. The reconfigurable apparatus according to claim 1 wherein the second component is guided in pivoting movement relative to the first component around an axis.
Claim 3	
3	3. The reconfigurable apparatus according to claim 1 wherein the reconfigurable apparatus is a piece of furniture.
Claim 4	
4	4. The reconfigurable apparatus according to claim 3 wherein the reconfigurable apparatus is a chair in which a user in the operative position is seated, with the first component comprising a seat upon which a user applies the force in the first manner by sitting in the chair.

Designation	Claim Language
Claim 5	
5	5. The reconfigurable apparatus according to claim 4 wherein the at least second component comprises a back rest against which a user seated in the chair leans to exert the force in the second manner to reconfigure the chair.
Claim 6	
6	6. The reconfigurable apparatus according to claim 5 wherein the adjusting assembly comprises a spring assembly that is configured to exert a force that resists movement of the at least second component relative to the first component and that varies as the magnitude of the force applied in the first manner varies.
Claim 7	
7	7. The reconfigurable apparatus according to claim 6 wherein the spring assembly comprises a leaf spring with a length that is bendable about a fulcrum location and the adjusting assembly and at least second component are configured so that as the force applied in the first manner changes in magnitude an effective length of the leaf spring changes.
Claim 8	
8	8. The reconfigurable apparatus according to claim 1 wherein the adjusting assembly is configured so that an increase in magnitude of the force applied in the first manner causes an increase in magnitude of the force applied in the second manner required to reconfigure the apparatus.
Claim 9	
9	9. The reconfigurable apparatus according to claim 7 wherein the leaf spring has a cross-sectional shape as viewed orthogonally to its length that is non-uniform over at least a portion of the length of the leaf spring.
Claim 10	
10	10. The reconfigurable apparatus according to claim 6 wherein the spring assembly comprises a plurality of leaf springs each with a length that bends around a fulcrum location.
Claim 14	
14	14. The reconfigurable apparatus according to claim 6 wherein the spring assembly comprises at least one leaf spring.

Designation	Claim Language
Claim 15	
15	15. The reconfigurable apparatus according to claim 14 wherein the at least one leaf spring has a length and spaced supported ends and the apparatus further comprises an actuating component that is configured to bear against the one leaf spring between the spaced supported ends to resist movement of the at least second component as the force is applied in the second manner with a magnitude that reconfigures the apparatus.
Claim 18	
18	18. The reconfigurable apparatus according to claim 1 wherein the adjusting assembly comprises cooperating toothed elements that move relative to each other as a magnitude of the force applied in the first manner reaches a predetermined level.
Claim 19	
19	19. The reconfigurable apparatus according to claim 4 wherein the seat is configured to move vertically relative to the frame with the first force applied in the first manner with a magnitude that reaches a predetermined level.
Claim 20	
20	20. The reconfigurable apparatus according to claim 1 wherein the apparatus further comprises a supporting biasing assembly that normally biasably urges the seat upwardly relative to the frame.
Claim 21	
21	21. The reconfigurable apparatus according to claim 2 wherein the axis is spaced from the first component.
Claim 22	
22	22. The reconfigurable apparatus according to claim 5 wherein the back rest is spaced from the seat.