IN THE UNITED STATES DISTRICT COURT
FOR THE WESTERN DISTRICT OF MICHIGAN

Aaron DeJule,	)	
	)	
Plaintiff,	)	
	)	Civil Action No. [*to be assigned*]
v.	)	
	)	**JURY TRIAL DEMANDED**
MillerKnoll, Inc.,	)	
	)	
Defendant.	)	
	)	
	)	

ORIGINAL COMPLAINT FOR
PATENT INFRINGEMENT AND BREACH OF CONTRACT

Plaintiff Mr. Aaron DeJule, by and through his undersigned counsel, alleges as follows:

1. Mr. DeJule is a Midwest-based industrial designer who has long specialized in designs for professional furniture, including chairs. Mr. DeJule's creative efforts have produced various award-winning designs, including for his chair designs.

2. In 2014, Mr. DeJule worked hard towards a new and improved design for controlling the tilt on the backrest of a professional chair. His efforts were successful. Mr. DeJule created the Self-Adjusting Tilt invention, which automatically adjusts the amount of force needed to tilt a chair's backrest based on the force applied by the user to the seat. Instead of a user manually adjusting the force required to adjust the backrest, Mr. DeJule's Self-Adjusting Tilt invention automatically adjusts the force required to adjust the backrest based on the force applied by the user at any given time to the seat.

3. Mr. DeJule approached representatives from Defendant MillerKnoll, Inc. (then-named "Herman Miller, Inc.")—a large producer of professional office equipment—to discuss their interest in the new designs he was working on. MillerKnoll agreed to meet with Mr. DeJule, and he traveled to MillerKnoll's offices in Michigan for meetings on January 16, 2015 and

February 11, 2015. Mr. DeJule presented multiple ideas and designs to MillerKnoll's designers, engineers, and businesspeople, and he explained the features of his Self-Adjusting Tilt invention with the mutual understanding that his ideas would remain confidential.

4. The parties later formalized their confidentiality agreement. MillerKnoll provided Mr. DeJule with a confidentiality agreement prepared by MillerKnoll's attorneys. Mr. DeJule and MillerKnoll both signed this Mutual Confidentiality Agreement ("MCA," attached hereto as **Exhibit 1**). In the MCA, Mr. DeJule and MillerKnoll expressly agreed that the information Mr. DeJule disclosed to MillerKnoll during their prior meetings was "Confidential information,' as defined in th[e] Agreement," and "shall be treated in all respects as Confidential Information in accordance with the terms of this Agreement."

5. On February 11, 2015, Mr. DeJule also filed Provisional Application No. 62/114,706 ("the '706 Application"), based in-part on his prototype, describing his Self-Adjusting Tilt invention, with the United States Patent and Trademark Office ("USPTO"). The '706 Application describes a "leaf spring and mechanism" that permits the chair to "automatically adjust" based on a given "individual's weight without having to adjust a knob":

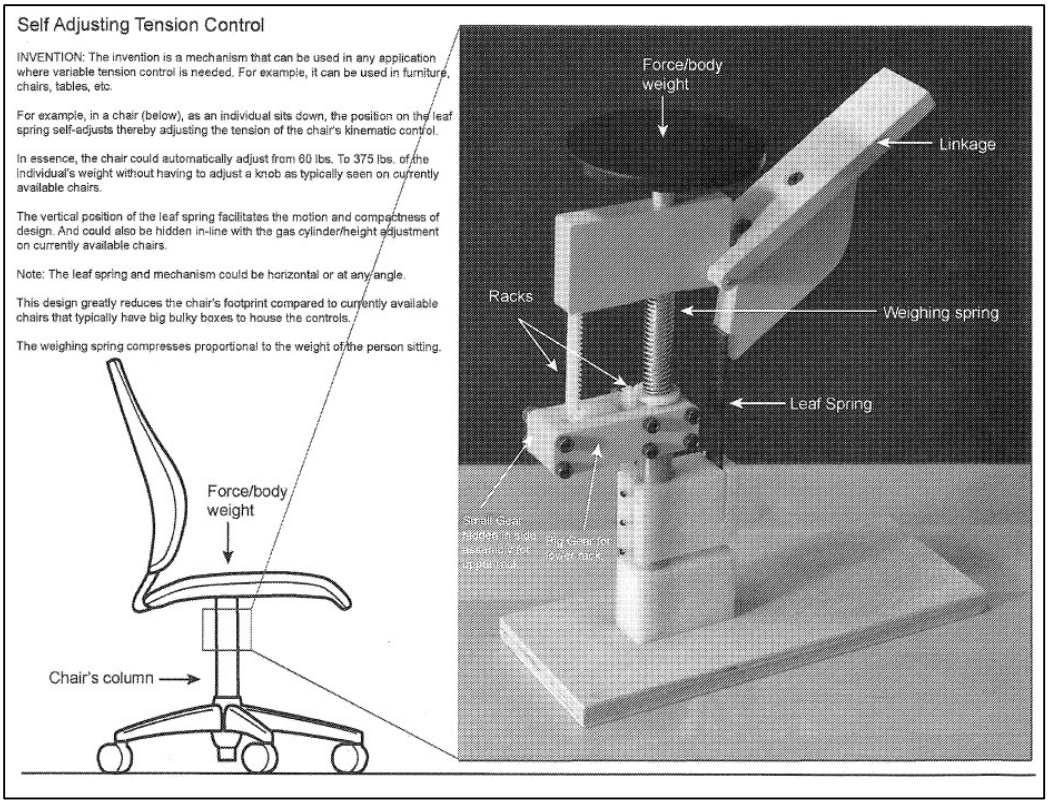

It further explains that "[t]he invention's racks and gears changes the working length of the leaf spring," and "[t]he linkage connects to the chair[']s recline/tilt control." And although the images depict the leaf spring mechanism in a "vertical position," the '706 Application makes clear it could also be provided "horizontal[ly] or at any angle."

6. The USPTO granted Mr. DeJule (and the designers he worked with) multiple patents, including United States Patent Nos. 10,292,498 ("the '498 Patent") issued May 21, 2019; 10,893,753 ("the '753 Patent") issued Jan. 19, 2021; 11,744,373 ("the '373 Patent") issued September 5, 2023; and 11,744,374 ("the '374 Patent") issued September 5, 2023 (collectively the "DeJule Patents"). Additional patents in this patent portfolio are pending with the USPTO.

7. Despite Mr. DeJule's presentation to MillerKnoll, and description of how his invention and prototype design operated, MillerKnoll told Mr. DeJule they were rejecting his idea and had no interest in using his invention or prototype design on any chair.

8. However, unbeknownst to Mr. DeJule, MillerKnoll actually decided to develop its new "Cosm" chair, which incorporates Mr. DeJule's Self-Adjusting Tilt invention.

9. According to MillerKnoll, the Cosm chair's "Auto-Harmonic Tilt" (which uses Mr. DeJule's Self-Adjusting Tilt invention) "represents something of a ***holy grail***"[1] because:

> A tilt is to a chair what a transmission is to a car, and like transmissions, some are manual, and others, such as Cosm's, are automatic. With other self-adjusting models, the chair decides how you should sit by forcing the body to conform to the tilt's movement. Cosm's Auto-Harmonic Tilt puts the person first and responds to them—no matter their posture—providing a balanced recline and personalized comfort. Studio 7.5 and Herman Miller perfected the self-adjusting tilt by inventing a complex, finely tuned mechanism. ***Accounting for the sitter's vertical force—which is always in flux—the gears within the tilt move the fulcrum along a leaf spring to automatically adjust the chair's tension***.

See https://www.hermanmiller.com/products/seating/office-chairs/cosm-chairs/design-story/.

10. Upon information and belief, MillerKnoll debuted a line of Cosm chairs in 2018. The Cosm chairs, with the Auto-Harmonic Tilt feature, have garnered many awards for MillerKnoll, including:

- 2018: #MetropolisLikes Award
- 2018: Interior Design HiP Award (workplace: task seating)
- 2018: Best of NeoCon Gold Award for the "Ergonomic Seating" category
- 2018: Fast Company Innovation by Design Award
- 2018: Dezeen Workplace Design Award
- 2018: Orgatec Innovation Award
- 2018: Gold at the New York DRIVENxDESIGN Award in the Product Design – Office category
- 2019: Red Dot Best of the Best Product Design Award in the "Office Chairs" category
- 2019: TIME as one of the 100 Best Inventions of 2019—a curation of products selected for making the world better, smarter, and more fun
- 2019: German Design Award for Excellent Product Design in the 'Office Chairs' category

[1] Emphasis is added throughout unless noted otherwise.

- 2019: Gold Product Award from the Deutscher Designer Club (DDC)
- 2020: iF Gold Award in the Office and Industry category at the iF World Design Awards 2020

11. Upon learning about the launch of the Cosm chair, and realizing that MillerKnoll used his Self-Adjusting Tilt invention without his authorization, Mr. DeJule contacted the MillerKnoll business representatives he knew. But instead of agreeing to resolve the dispute and license Mr. DeJule's Self-Adjusting Tilt invention, they referred Mr. DeJule to MillerKnoll's legal counsel. Mr. DeJule exchanged correspondence with MillerKnoll's legal counsel for some time, but it became clear that they had no interest in properly compensating Mr. DeJule for MillerKnoll's continuing, unauthorized use of his invention. MillerKnoll has now spent several ***years*** refusing to respect either Mr. DeJule's intellectual property rights or the contractual rights granted to him through MillerKnoll's own confidentiality agreement.

12. Through this action, Mr. DeJule is seeking to enforce both his intellectual property rights and his contractual rights, and thereby seeks fair and reasonable compensation for his contributions to what MillerKnoll touts as the "holy grail" of adjustable chairs.

Nature of the Action

13. Mr. DeJule asserts claims for patent infringement of the DeJule Patents under 35 U.S.C. § 271. These claims arise out of MillerKnoll's manufacture, use, sale, offer to sell within the United States, and/or importation into the United States of, at least, its "Cosm" model of professional chairs and any other products incorporating the features of Auto-Harmonic Tilt (the "Accused Products").

14. Mr. DeJule asserts claims for breach of contract based on MillerKnoll's multiple, and continuing, failures to comply with the MCA's restrictions regarding Mr. DeJule's "Confidential Information."

Parties

15. Plaintiff Aaron DeJule is an individual residing in River Forest, Illinois.

16. Upon information and belief, Defendant MillerKnoll, Inc. is a Michigan corporation with a place of business at 855 E Main Ave, Zeeland, MI 49464. Upon information and belief, MillerKnoll's name was changed from "Herman Miller, Inc." to "MillerKnoll, Inc." on or about November 1, 2021.

Jurisdiction and Venue

17. Mr. DeJule's claims for patent infringement of the DeJule Patents arise under the Patent Laws of the United States, 35 U.S.C. §§ 1 et seq. The Court therefore has subject matter jurisdiction over these claims under 28 U.S.C. § 1338(a).

18. Mr. DeJule's claim for breach of contract arises under Michigan state law. Because Mr. DeJule and MillerKnoll are citizens of different States and the matter in controversy exceeds the sum or value of $75,000, exclusive of interest and costs, this Court has subject matter jurisdiction over this breach of contract claim under 28 U.S.C. § 1332(a). Alternatively, this Court has subject matter jurisdiction under at least 28 U.S.C. § 1367(a).

19. This Court has personal jurisdiction over MillerKnoll at least because MillerKnoll resides in Michigan, has consented to this Court's personal jurisdiction pursuant to Section 12 of the MCA, and the facts and circumstances giving rise to Mr. DeJule's claims have taken place in this District (*e.g.*, the circumstances regarding Mr. DeJule's meetings with MillerKnoll and, upon information and belief, manufacture and/or sale of the Accused Products).

20. Venue is proper under 28 U.S.C. § 1400(b) for Mr. DeJule's claims under the Patent Act at least because MillerKnoll resides in this District, has a regular place of business in this District, and has, upon information and belief, committed acts of infringement in this District (*e.g.*, manufacturing and sales of the Accused Products).

21. Venue is proper under 28 U.S.C. § 1391(b)-(c) for Mr. DeJule's breach of contract claims at least because MillerKnoll resides in this District and because a substantial part of the events or omissions giving rise to Mr. DeJule's claims (*e.g.*, the circumstances regarding Mr. DeJule's meetings with MillerKnoll) took place in this District.

The DeJule Patents

22. The '373 Patent issued September 5, 2023 to named inventors Mr. DeJule, Mr. Padiak, and Mr. Evans. The '373 Patent is valid and enforceable, and Mr. DeJule holds the entire right, title, and interest—including all enforcement rights—to the '373 Patent by virtue of assignment. Attached as **Exhibit 2**.

23. The '374 Patent issued September 5, 2023 to named inventors Mr. DeJule, Mr. Padiak, and Mr. Evans. The '374 Patent is valid and enforceable, and Mr. DeJule holds the entire right, title, and interest—including all enforcement rights—to the '374 Patent by virtue of assignment. Attached as **Exhibit 3**.

24. The '753 Patent issued on January 19, 2021 to named inventors Mr. DeJule, Mr. Padiak, and Mr. Evans. The '753 Patent is valid and enforceable, and Mr. DeJule holds the entire right, title, and interest—including all enforcement rights—to the '753 Patent by virtue of assignment. Attached as **Exhibit 4**.

25. The '498 Patent issued on May 21, 2019 to named inventors Mr. DeJule, Mr. Padiak, and Mr. Evans. The '498 Patent is valid and enforceable, and Mr. DeJule holds the entire right, title, and interest—including all enforcement rights—to the '498 Patent by virtue of assignment. Attached as **Exhibit 5**.

Interaction Between Mr. DeJule and MillerKnoll

26. In June 2014, Mr. DeJule attended NeoCon 2014 in Chicago, Illinois—a major conference for the commercial design community—where he met with Mr. Gary Smith of

MillerKnoll. Upon information and belief, at this time Mr. Smith held the title of Vice President, Product Design and Exploration at MillerKnoll.

27. In August 2014, Mr. DeJule contacted Mr. Smith and proposed a meeting to discuss some of Mr. DeJule's general ideas in the area of chair design. Mr. DeJule believed his ideas would be a good fit for MillerKnoll and would set a benchmark in ergonomics for professional task chairs, in particular.

28. Mr. Smith responded on October 9, 2014, stating that MillerKnoll could not "look at unsolicited submissions in the task seating category," in part because there is "so much intellectual property always in play."

29. Nevertheless, on October 16, 2014, MillerKnoll's Chris Hoyt contacted Mr. DeJule to "continue th[e] conversation" regarding his ideas. Upon information and belief, at this time Mr. Hoyt worked for Mr. Smith on the MillerKnoll "Design Exploration" team, and held the title of Manager, Design Exploration.

30. In early November 2014, Mr. DeJule and Mr. Hoyt had an initial discussion regarding some of Mr. DeJule's ideas. Mr. DeJule followed-up via email on November 6, 2014 with "additional thoughts," including:

> - ***Body motion is key, but only in a controlled manner***. The additional body movements in the design are controlled and deliberate but work together while maintaining body support throughout the chairs movement range.
>
> - The design is a ***precise pivoting system not an approximation for body movement***. Pivot positions in the body can be precisely defined and mirrored with chair. ***This is unprecedented with current chair technology***.
>
> - The mechanical geometry and aesthetic of the chair is light weight. This differentiates form the competition with a full featured chair that is not heavy/bulky.
>
> - The mechanism is seen as the chair moves. ***This lends a 'magical' quality***...this is not a simple pivot or 4-bar linkage, ***it's mind boggling complex to understand but simple in form***. The design has an artistic beauty as well as a purposeful

seating device function.

(Emphasis added).

31. Mr. DeJule's description of his general ideas piqued the interest of Mr. Hoyt and Mr. Marc Gierz. Upon information and belief, at the time Mr. Gierz held the title of Senior Design Exploration Manager at MillerKnoll.

32. On November 18, 2014, Mr. Hoyt explained that he "gave Marc a brief introduction to your [Mr. DeJule's] concept and shared the bullets." He and Mr. Gierz were interested in Mr. DeJule "shar[ing] your concept and model" via a remote or in-person meeting. Mr. Hoyt represented to Mr. DeJule that "***if your concept starts to encroach on anything we are currently exploring/developing Marc or I would stop the conversation as to not violate anyone's IP***."

33. On Friday, January 16, 2015, Mr. DeJule drove to MillerKnoll's Design Yard in Michigan, where he had a confidential meeting with Mr. Hoyt and Mr. Gierz. Throughout this meeting, Mr. DeJule described his general design and explained its benefits (but did not yet disclose the prototype and full details of his Self-Adjusting Tilt invention). Neither Mr. Hoyt nor Mr. Gierz stopped the conversation over any of MillerKnoll's alleged beliefs that Mr. DeJule's ideas would encroach on anything Miller Knoll was currently exploring/developing or over any alleged intellectual property concerns.

34. Plainly impressed, Mr. Hoyt contacted Mr. DeJule the following Monday, January 19 to propose another confidential meeting in February, this time including more senior MillerKnoll personnel: Mr. Smith and Mr. John Aldrich. Upon information and belief, at the time Mr. Aldrich held the title of Vice President, Advanced Development at MillerKnoll.

35. In preparation for the February meeting, Mr. Hoyt offered to work with Mr. DeJule to help him present "about the 'why' and how [his chair design] fits with" MillerKnoll.

After Mr. DeJule informed Mr. Hoyt he had finished a prototype to demonstrate his Self-Adjusting Tilt invention, Mr. Hoyt noted that it "makes sense to show the self-adjusting mechanism in person." Mr. Hoyt also affirmed that Mr. DeJule's proposed written materials did "a good job of highlighting the technical and functional new ideas you've presented."

36. On February 11, 2015, Mr. DeJule again drove to MillerKnoll's Design Yard in Michigan, where he met with Mr. Hoyt, Mr. Gierz, Mr. Smith, and Mr. Aldrich. Mr. At this meeting, DeJule presented his Self-Adjusting Tilt invention. Despite this presentation, MillerKnoll did not seem impressed. In fact, Mr. Aldrich spent nearly one-hour describing the forces between a chair and body and he expressed his opinion that Mr. DeJule's Self-Adjusting Tilt invention would not work. At no time during the meeting, or after the meeting, did any of the MillerKnoll personnel stop the conversation over any of MillerKnoll's alleged beliefs that Mr. DeJule's ideas would encroach on anything Miller Knoll was currently exploring/developing or over any alleged intellectual property concerns.

37. The same day, Mr. DeJule and MillerKnoll discussed formalizing their confidentiality agreement to ensure that everything Mr. DeJule presented to MillerKnoll would remain confidential. Mr. Hoyt confirmed on February 12, 2015 that Mr. DeJule had "his and the groups promise that all work shared will be kept confidential." Further, despite the response at the February 11, 2015 meeting, Mr. Hoyt also complimented Mr. DeJule: "Impressing John [Aldrich] is not something to take lightly, so nice work."

38. On February 16, 2015, Mr. Hoyt provided Mr. DeJule with MillerKnoll's MCA (mutual non-disclosure agreement), and requested that Mr. DeJule "give it a look over, sign/scan and send back my way." After adding a sentence to confirm the agreement encompassed the information disclosed in the prior meetings, including his Self-Adjusting Tilt invention, Mr.

DeJule signed the MCA. Mr. Hoyt also signed the revised MCA and provided Mr. DeJule a counter-signed copy.

39. On March 10, 2015, Mr. Hoyt updated Mr. DeJule after having "had a chance to sit down with Gary [Smith]." Mr. Hoyt, again, complimented Mr. DeJule's industrial design skillset, making clear that MillerKnoll was "impressed":

> I'm not sure how clear or how much depth I've shared with you about unsolicited designs. ***We have a very low success rate for unsolicited submissions from unknown designers***. Unsolicited submissions usually allow us to understand how a designer approaches a problem, how they see the world, their technical abilities and design strengths. From there we can understand that designer and seek a response from them to a problem that HM is dealing with. ***I say this because you've impressed us with your work and thinking and have made an impression on us..*** We've talked very briefly about your other design work, I'd like to have a further conversation around your ID skillset.

(Emphasis added).

40. Despite this high praise, Mr. Hoyt also represented to Mr. DeJule that "[a]t this time, we [MillerKnoll] are not interested in pursuing a chair." According to Mr. Hoyt, MillerKnoll ostensibly "d[id]n't have the capacity and at this time it doesn't align with our strategic seating path for the next few years."

41. Although MillerKnoll informed Mr. DeJule they were not interested in pursuing a chair, MillerKnoll actually did develop a new chair using Mr. DeJule's invention. MillerKnoll's website states that the Accused Products with Auto-Harmonic Tilt were designed by Studio 7.5.[2]

42. MillerKnoll's virtual patent-marking website represents that the Accused Products practice U.S. Patent No. 10,531,738 ("the '738 Patent"), which lists Johann Burkhard Schmitz,

---

[2] *Cosm by Studio 7.5*, HERMANMILLER.COM, https://www.hermanmiller.com/products/seating/office-chairs/cosm-chairs/design-story/ (last visited Aug. 18, 2023).

Carola Zwick, and Roland Zwick as named inventors.[3] Notably, the '738 Patent lists a priority claim to German Patent Application No. DE 10 2015 003 156, filed March 14, 2015. This patent application was filed a few weeks after Mr. DeJule presented his Self-Adjusting Tilt invention and prototype to MillerKnoll and a mere ***four (4) days*** after Mr. Hoyt's email claiming that MillerKnoll "lack[ed] capacity" and that "pursuing a chair" "doesn't align with our strategic seating path for the next few years."

43. MillerKnoll's virtual patent-marking website also represents that the Accused Products practice U.S. Patent No. U.S. 10,743,677 (the "'677 Patent"). Upon information and belief, the '677 Patent lists three MillerKnoll employees—James Slagh (Holland, MI), Brenth Tracy (Holland, MI), and Michael Stanton, Sr. (Rockford, MI)—as co-inventors alongside Mr. Schmitz, Ms. Zwick, and Mr. Zwick. The '677 Patent lists a priority claim to U.S. Provisional Application No. 62/185,932, filed June 29, 2015. This patent application was filed ***less than four (4) months*** after Mr. Hoyt's email claiming that MillerKnoll "lack[ed] capacity" and that "pursuing a chair" "doesn't align with our strategic seating path for the next few years."

44. Despite MillerKnoll telling Mr. DeJule they were rejecting his self-adjusting chair invention and design, over the following years, Mr. DeJule continued to correspond with MillerKnoll (including Mr. Hoyt and Mr. Smith) regarding other design projects. In one such communication dated December 4, 2016, Mr. DeJule informed MillerKnoll that he had filed for a utility patent on his Self-Adjusting Tilt invention, explaining that he "thought you/HM might already be working on something like that." On December 9, 2016, Mr. Hoyt responded, confirming that MillerKnoll was indeed "currently working on something like that."

---

[3] *Patents*¸ HERMANMILLER.COM, https://www.hermanmiller.com/legal/patents/ (last visited Aug. 18, 2023).

45. On information and belief, MillerKnoll's Cosm chair, with Auto-Harmonic Tilt, which launched in 2018, was the "something like that" Mr. Hoyt was referring to.

46. After reading an article about Cosm's Auto-Harmonic Tilt, Mr. DeJule became concerned about the similarity between MillerKnoll's Cosm's chair (with Auto-Harmonic Tilt) and his invention and design (the Self-Adjusting Tilt invention).

47. On June 21, 2018, Mr. DeJule contacted Mr. Smith to inquire about Cosm's Auto-Harmonic Tilt, noting that it "sounds like what I showed you in our first meeting with John [Aldrich]." Mr. Smith responded that Mr. DeJule would "have to pose [that question' to John [Aldrich] when we are together," but confirmed that "[t]he mechanism does slide a fulcrum based on the users weight and somehow also knows if the chair is in a high or low position," which is one key aspect of Mr. DeJule's invention and design.

48. In a later meeting, Mr. Aldrich confirmed to Mr. DeJule that Cosm's Auto-Harmonic Tilt was doing what Mr. DeJule had showed MillerKnoll with his Self-Adjusting Tilt invention and prototype design.

49. Mr. Smith then denied that MillerKnoll copied Mr. DeJule's work, but agreed that he and Mr. Aldrich would discuss the issue with Mr. DeJule on April 12, 2019. However, after this call, on April 24, 2019, Mr. Smith informed Mr. DeJule that his questions regarding Cosm's Auto-Harmonic Tilt had been referred to MillerKnoll's legal department.

50. In May 2019, Mr. DeJule spoke with MillerKnoll's Associate General Counsel, Phoebe Bower, who expressed MillerKnoll's interest in acquiring Mr. DeJule's patents covering the Self-Adjusting Tilt invention.

51. On June 26, 2019, Mr. DeJule and Mr. Bower spoke again. Shortly thereafter, on June 28, 2019, Mr. DeJule provided Ms. Bowers patent claims for a pending patent application

and informed her that he was considering fling yet another continuation patent application.

52. Mr. DeJule and Ms. Bower spoke again on August 7, 2019, at which time Ms. Bower informed Mr. DeJule that MillerKnoll was turning the matter over to outside counsel. Mr. DeJule found this escalation concerning and attempted to seek a resolution through MillerKnoll's business personnel, including Mr. Aldrich.

53. In September 2019, Mr. DeJule again contacted Ms. Bower and Mr. Aldrich and informed them that the Patent Office had allowed all the claims from his pending continuation application. Mr. DeJule was told to stop contacting MillerKnoll and to speak with their lawyers.

54. Over the following years, Mr. DeJule, including through his counsel Mr. Mortimer and Mr. Shulman, continued communications relating to Mr. DeJule's issued and pending patents and the Accused Products with MillerKnoll's outside counsel, including Daniel Jones of Michael Best & Friedrich and Mr. Erik Maurer of Banner & Witcoff, Ltd. During those conversations, Mr. DeJule explained that the Accused Products infringe the '498 Patent and '753 Patent (the two issued patents at that time). Mr. DeJule also confirmed that additional patent applications were pending. Subsequent correspondence with MillerKnoll's attorneys continued to show MillerKnoll's awareness of Mr. DeJule's patent rights. Although the parties discussed potential terms to resolve this matter, these conversations reached an impasse.

COUNT I

(Infringement of U.S. Patent No. 11,744,373)

55. Mr. DeJule realleges and incorporates by reference the allegations contained in paragraphs 1 through 54 of the Complaint as though fully set forth herein.

56. Claim 1 of the '373 Patent recites:

A chair, comprising:

a backrest portion;

a seat portion coupled with the backrest portion;

a column portion coupled with the seat portion;

linkage coupled with the backrest portion;

a leaf spring in direct contact with the linkage;

an arc-shaped toothed structure fixed translationally relative to the column portion; and

a different toothed structure in contact with the arc-shaped toothed structure, and wherein:

when a weight is applied to the seat portion, a fulcrum point of the leaf spring moves as the different toothed structure moves along the arc-shaped toothed structure to thereby shorten a working length of the leaf spring and provide an increased resistance to tilting of the backrest portion relative to the column portion.

57. MillerKnoll directly infringes by engaging in the manufacture, use, offer to sell, sale, and/or importation into the United States of the Accused Products before the expiration of the ’373 Patent in violation of 35 U.S.C. § 271(a). The Accused Products, either literally or under the doctrine of equivalents, practice every element of at least claim 1 of the ’373 Patent. A claim chart with exemplary evidence regarding direct infringement of the ’373 Patent, claim 1, by the Accused Products is attached as **Exhibit 2A**.

58. Upon information and belief, MillerKnoll has entered into distribution agreements with “dealers” for the Accused Products by which it encourages third parties to sell the Accused Products in the United States. *See, e.g.*, https://www.millerknoll.com/where-to-buy. Upon information and belief, MillerKnoll has induced infringement of the ’373 Patent at least by encouraging others to sell the Accused Products in the United States before the expiration of the ’373 Patent in violation of 35 U.S.C. § 271(b).

59. Upon information and belief, MillerKnoll is liable for contributory infringement of the ’373 Patent under 35 U.S.C. § 271(c) for offering to sell, selling, and/or importing into the

United States the Accused Products, which include at least a component that is a material part of the invention of the ’373 Patent. The Accused Products are especially made or especially adapted for use in infringing the ’373 Patent, and are not a staple article or commodity of commerce suitable for substantial non-infringing use.

60. On information and belief, MillerKnoll’s infringement of the ’373 Patent, from the date of the original Complaint, has been willful. MillerKnoll has knowledge of the ’373 Patent. Despite this knowledge, MillerKnoll continues to knowingly, willfully, deliberately, maliciously, and in bad faith infringe the ’373 Patent, and, in doing so, knew or should have known that its conduct amounted to infringement.

61. This case is exceptional, and Mr. DeJule is entitled to an award of attorneys’ fees under 35 U.S.C. § 285.

COUNT II

(Infringement of U.S. Patent No. 11,744,374)

62. Mr. DeJule realleges and incorporates by reference the allegations contained in paragraphs 1 through 54 of the Complaint as though fully set forth herein.

63. Claim 1 of the ’374 Patent recites:

> A reconfigurable apparatus for seating a user, the reconfigurable apparatus comprising:
>
> a column;
>
> a seat mounted on the column and movable relative to the column between: a) a first position in which the seat resides with no user sitting on the seat; and b) a loaded position into which the seat moves from the first position as an incident of a user sitting on the seat;
>
> a backrest against which a user sitting on the seat can bear his/her back to produce a leaning force that changes an angular orientation of the backrest relative to the column; and

a linkage statically attached to the backrest and rotatably attached below the seat;

a leaf spring statically attached at one end and in direct contact with the linkage to provide a resistance to tilting of the backrest relative to the column;

a first structure fixed to the column, wherein the first structure has an arc shape that includes one or more teeth; and

a second structure in contact with the first structure, wherein a portion of the second structure includes one or more teeth,

the reconfigurable apparatus configured so that a first leaning force is required to be applied to the backrest to change the angular orientation of the backrest from a starting angular position relative to the column with no user sitting in the seat; and

an adjusting assembly comprising a plurality of gears that cooperate with each other as an incident of the seat moving from the first position into the loaded position and configured to thereby increase a resistance to changing of the angular orientation of the backrest from the starting angular position,

wherein the reconfigurable apparatus is configured such that, when a weight is applied to the seat, the one or more teeth of the second structure move along the one or more teeth of the first structure to thereby shorten a working length of the leaf spring and provide an increased resistance to tilting of the backrest relative to the column,

whereby as an incident of a user sitting on the seat a leaning force greater than the first leaning force is required to change the angular position of the backrest from the starting angular position.

64. MillerKnoll directly infringes by engaging in the manufacture, use, offer to sell, sale, and/or importation into the United States of the Accused Products before the expiration of the ’374 Patent in violation of 35 U.S.C. § 271(a). The Accused Products, either literally or under the doctrine of equivalents, practice every element of at least claim 1 of the ’374 Patent. A claim chart with exemplary evidence regarding direct infringement of the ’374 Patent, claim 1, by the Accused Products is attached as **Exhibit 3A**.

65. Upon information and belief, MillerKnoll has entered into distribution agreements

with "dealers" for the Accused Products by which it encourages third parties to sell the Accused Products in the United States. *See, e.g.*, https://www.millerknoll.com/where-to-buy. Upon information and belief, MillerKnoll has induced infringement of the '374 Patent at least by encouraging others to sell the Accused Products in the United States before the expiration of the '374 Patent in violation of 35 U.S.C. § 271(b).

66. Upon information and belief, MillerKnoll is liable for contributory infringement of the '374 Patent under 35 U.S.C. § 271(c) for offering to sell, selling, and/or importing into the United States the Accused Products, which include at least a component that is a material part of the invention of the '374 Patent. The Accused Products are especially made or especially adapted for use in infringing the '374 Patent, and are not a staple article or commodity of commerce suitable for substantial non-infringing use.

67. On information and belief, MillerKnoll's infringement of the '374 Patent, from the date of the original Complaint, has been willful. MillerKnoll has knowledge of the '374 Patent. Despite this knowledge, MillerKnoll continues to knowingly, willfully, deliberately, maliciously, and in bad faith infringe the '374 Patent, and, in doing so, knew or should have known that its conduct amounted to infringement.

68. This case is exceptional, and Mr. DeJule is entitled to an award of attorneys' fees under 35 U.S.C. § 285.

COUNT III

(Infringement of U.S. Patent No. 10,893,753)

69. Mr. DeJule realleges and incorporates by reference the allegations contained in paragraphs 1 through 54 of the Complaint as though fully set forth herein.

70. Claim 1 of the '753 Patent recites:

> Claim 1. A reconfigurable apparatus for seating a user, the reconfigurable apparatus comprising:
>
> a frame;
>
> a seat mounted on the frame and movable relative to the frame between: a) a first position in which the seat resides with no user sitting on the seat; and b) a loaded position into which the seat moves from the first position as an incident of a user sitting on the seat;
>
> a back rest against which a user sitting on the seat can bear his/her back to produce a leaning force that changes an angular orientation of the back rest relative to the frame,
>
> the apparatus configured so that a first leaning force is required to be applied to the back rest to change the angular orientation of the back rest from a starting angular position relative to the frame with no user sitting in the seat; and
>
> an adjusting assembly comprising a plurality of gears that cooperate and move relative to each other as an incident of the seat moving from the first position into the loaded position and configured to thereby increase a resistance to changing of the angular orientation of the back rest from the starting angular position,
>
> whereby as an incident of a user sitting on the seat a leaning force greater than the first leaning force is required to change the angular position of the back rest from the starting angular position.

71. MillerKnoll directly infringes by engaging in the manufacture, use, offer to sell, sale, and/or importation into the United States of the Accused Products before the expiration of the ’753 Patent in violation of 35 U.S.C. § 271(a). The Accused Products, either literally or under the doctrine of equivalents, practice every element of at least claim 1 of the ’753 Patent. A claim chart with exemplary evidence regarding direct infringement of the ’753 Patent, claim 1, by the Accused Products is attached as **Exhibit 4A**.

72. Upon information and belief, MillerKnoll has entered into distribution agreements with “dealers” for the Accused Products by which it encourages third parties to sell the Accused Products in the United States. *See, e.g.*, https://www.millerknoll.com/where-to-buy. Upon

information and belief, MillerKnoll has induced infringement of the ’753 Patent at least by encouraging others to sell the Accused Products in the United States before the expiration of the ’753 Patent in violation of 35 U.S.C. § 271(b).

73. Upon information and belief, MillerKnoll is liable for contributory infringement of the ’753 Patent under 35 U.S.C. § 271(c) for offering to sell, selling, and/or importing into the United States the Accused Products, which include at least a component that is a material part of the invention of the ’753 Patent. The Accused Products are especially made or especially adapted for use in infringing the ’753 Patent, and are not a staple article or commodity of commerce suitable for substantial non-infringing use.

74. On information and belief, MillerKnoll’s infringement of the ’753 Patent has been willful. As discussed above, MillerKnoll had knowledge of the ’753 Patent. Despite this knowledge, MillerKnoll continues to knowingly, willfully, deliberately, maliciously, and in bad faith infringe the ’753 Patent, and, in doing so, knew or should have known that its conduct amounted to infringement.

75. This case is exceptional, and Mr. DeJule is entitled to an award of attorneys’ fees under 35 U.S.C. § 285.

COUNT IV

(Infringement of U.S. Patent No. 10,292,498)

76. Mr. DeJule realleges and incorporates by reference the allegations contained in paragraphs 1 through 54 of the Complaint as though fully set forth herein.

77. Claim 18 of the ’498 Patent, which depends from independent claim 1, recites:

> Claim 1. A reconfigurable apparatus for supporting at least part of a user’s weight with the user in an operative position with respect to the reconfigurable apparatus, the reconfigurable apparatus comprising:
>
> a frame;

> a first component on the frame upon which a force is applied by a user in a first manner as an incident of the user assuming the operative position;
>
> at least a second component on the frame that is movable relative to the first component and upon which a force can be applied by a user in the operative position in a second manner to reconfigure the apparatus by moving the at least second component relative to the first component; and
>
> an adjusting assembly cooperating between the first component and the at least second component and configured so that as an incident of the force being applied in the first manner changing in magnitude, the force required to be applied in the second manner to reconfigure the apparatus and move the second component relative to the first component changes in magnitude.
>
> Claim 18. The reconfigurable apparatus according to claim 1 wherein the adjusting assembly comprises cooperating toothed elements that move relative to each other as a magnitude of the force applied in the first manner reaches a predetermined level.

78. MillerKnoll directly infringes by engaging in the manufacture, use, offer to sell, sale, and/or importation into the United States of the Accused Products before the expiration of the ’498 Patent in violation of 35 U.S.C. § 271(a). The Accused Products, either literally or under the doctrine of equivalents, practice every element of at least claim 18 of the ’498 Patent. A claim chart with exemplary evidence regarding direct infringement of the ’498 Patent, claim 18, by the Accused Products is attached as **Exhibit 5A**.

79. Upon information and belief, MillerKnoll has entered into distribution agreements with “dealers” for the Accused Products by which it encourages third parties to sell the Accused Products in the United States. *See, e.g.*, https://www.millerknoll.com/where-to-buy. Upon information and belief, MillerKnoll has induced infringement of the ’498 Patent at least by encouraging others to sell the Accused Products in the United States before the expiration of the ’498 Patent in violation of 35 U.S.C. § 271(b).

80. Upon information and belief, MillerKnoll is liable for contributory infringement of the ’498 Patent under 35 U.S.C. § 271(c) for offering to sell, selling, and/or importing into the

United States the Accused Products, which include at least a component that is a material part of the invention of the ’498 Patent. The Accused Products are especially made or especially adapted for use in infringing the ’498 Patent, and are not a staple article or commodity of commerce suitable for substantial non-infringing use.

81. On information and belief, MillerKnoll’s infringement of the ’498 Patent has been willful. As discussed above, MillerKnoll had knowledge of the ’498 Patent. Despite this knowledge, MillerKnoll continues to knowingly, willfully, deliberately, maliciously, and in bad faith infringe the ’498 Patent, and, in doing so, knew or should have known that its conduct amounted to infringement.

82. This case is exceptional, and Mr. DeJule is entitled to an award of attorneys’ fees under 35 U.S.C. § 285.

COUNT V

(Breach of the Mutual Confidentiality Agreement)

83. Mr. DeJule realleges and incorporates by reference the allegations contained in paragraphs 1 through 54 of the Complaint as though fully set forth herein.

84. The MCA is a valid and enforceable contract between MillerKnoll and Mr. DeJule.

85. Paragraph 1 of the MCA defines “Confidential Information.” Under this definition, “[a]ll information disclosed by the disclosing party (‘Discloser’) will be considered Confidential information of Disclosure by the receiving party (‘Recipient’) unless excluded under Paragraph 3 of this Agreement.”

86. Paragraph 1 acknowledges that “Aaron DeJule has already disclosed information that is ‘Confidential Information’, as defined in this Agreement, to Company [MillerKnoll]

during separate meetings that took place between Aaron DeJule and representatives of Company [MillerKnoll] on 1.16.2015 and 2.11.2015" and affirms that "[t]his information shall be treated in all respects as Confidential Information in accordance with the terms of this Agreement, even though it was exchanged before this Agreement was entered into between the Parties."

87. Information regarding Mr. DeJule's chair design, Self-Adjusting Tilt invention, prototype, and its functionality, structure, and operability constitute "Confidential Information" under the MCA.

88. Paragraph 2 of the MCA imparts an obligation for MillerKnoll, as "Recipient" of Mr. DeJule's "Confidential Information," to "not use, disseminate, or in any way disclose any Confidential Information of the other party, as Discloser, to any person, firm or business, except to the extent necessary for internal evaluations in connection with negotiations, discussions, and consultations with personnel or authorized representatives of such Discloser, and for any other purpose such Discloser may hereafter authorize in writing."

89. Mr. DeJule did not authorize MillerKnoll to use his "Confidential Information" for "any other purpose" in writing.

90. Upon information and belief, at least Mr. John Aldrich was knowledgeable regarding Mr. DeJule's confidential information and participated in the design of the Accused Products. Upon information in belief, MillerKnoll's design of the Accused Products continued after September 2017 and throughout the months preceding the launch of the Cosm chair with Auto-Harmonic Tilt in 2018. Upon information and belief, MillerKnoll used Mr. DeJule's Confidential Information during that time period, which is not a permitted purpose of Paragraph 2.

91. Mr. DeJule has suffered harm from MillerKnoll's breach of the MCA, such as

MillerKnoll's commercialization and unauthorized practice of his confidential information.

PRAYER FOR RELIEF

WHEREFORE, Plaintiff Aaron DeJule prays for judgment against Defendant MillerKnoll, Inc., and respectfully requests the following relief:

1. A judgment that MillerKnoll has infringed, directly and/or indirectly, literally and/or under the doctrine of equivalents, one or more claims of the DeJule Patents;

2. An award of damages to be paid to Mr. DeJule by MillerKnoll adequate to compensate Mr. DeJule for MillerKnoll's past infringement of the DeJule Patents, and any continuing infringement and/or future infringement of the DeJule Patents, including pre-judgment and post-judgment interest, costs, expenses, and an accounting of all infringing acts including, but not limited to, those acts presented at trial as well as those acts not presented at trial;

3. A judgment that MillerKnoll's infringement was willful and trebling any damages found or assessed;

4. A declaration that this case is exceptional under 35 U.S.C. § 285, and an award of Mr. DeJule's reasonable attorneys' fees;

5. A judgment that MillerKnoll breached the MCA, and monetary and/or equitable relief based on MillerKnoll's breach of the MCA;

6. An order for MillerKnoll to pay Mr. DeJule's costs and expenses; and

7. An award of such other and further relief, at law or in equity, as the Court deems just and proper.

DEMAND FOR A JURY TRIAL

Pursuant to Federal Rule of Civil Procedure 38(c), Mr. DeJule demands a jury trial regarding all claims and issues so triable.

Dated: September 13, 2023

Respectfully submitted,

/s/ R. Michael "Mike" Azzi
R. Michael "Mike" Azzi
Warner Norcross + Judd LLP
150 Ottawa Avenue NW
Suite 1500
Grand Rapids, Michigan 49503-2832
Telephone: 616.752.2784
Fax: 616.752.7500
mazzi@wnj.com

Jason C. White
Scott D. Sherwin (admission pending)
Michael T. Sikora (admission pending)
110 N. Wacker Drive, Ste. 2800
Chicago, IL 60601
Telephone: 312.324.1000
Fax: 312.324.1001
jason.white@morganlewis.com
scott.sherwin@morganlewis.com
michael.sikora@morganlewis.com

Brandon Pongracz (admission pending)
One Market, Spear Street Tower, 28th Floor
San Francisco, CA 94105-1596
Telephone: 415.442.1000
Fax: 415.442.1001
brandon.pongracz@morganlewis.com

Attorneys for Plaintiff Aaron DeJule