US 20110152947A1

(19) United States

(12) Patent Application Publication

KIRSCHMAN

(10) Pub. No.: US 2011/0152947 A1

(43) Pub. Date: Jun. 23, 2011

(54) SPINAL IMPLANT LOCKING MEMBER WITH IMPROVED GUIDANCE, TACTILE AND VISUAL FEEDBACK

(75) Inventor: DAVID LOUIS KIRSCHMAN, Dayton, OH (US)

(73) Assignee: X-SPINE SYSTEMS, INC., Miamisburg, OH (US)

(21) Appl. No.: 12/641,416

(22) Filed: Dec. 18, 2009

Publication Classification

(51) Int. Cl.
A61B 17/86 (2006.01)
A61B 17/00 (2006.01)

(52) U.S. Cl. **606/302**; 606/208

(57) ABSTRACT

An implant having a receiver that is adapted to receive a polyaxial screw in the bore and either an internal or external cap. The cap can be an external or internal cap and the implant further has at least one locking aid in the form of at least one of a tactile feedback, a visual feedback or an enhanced fixation between the cap and a rod that is received in the receiver.

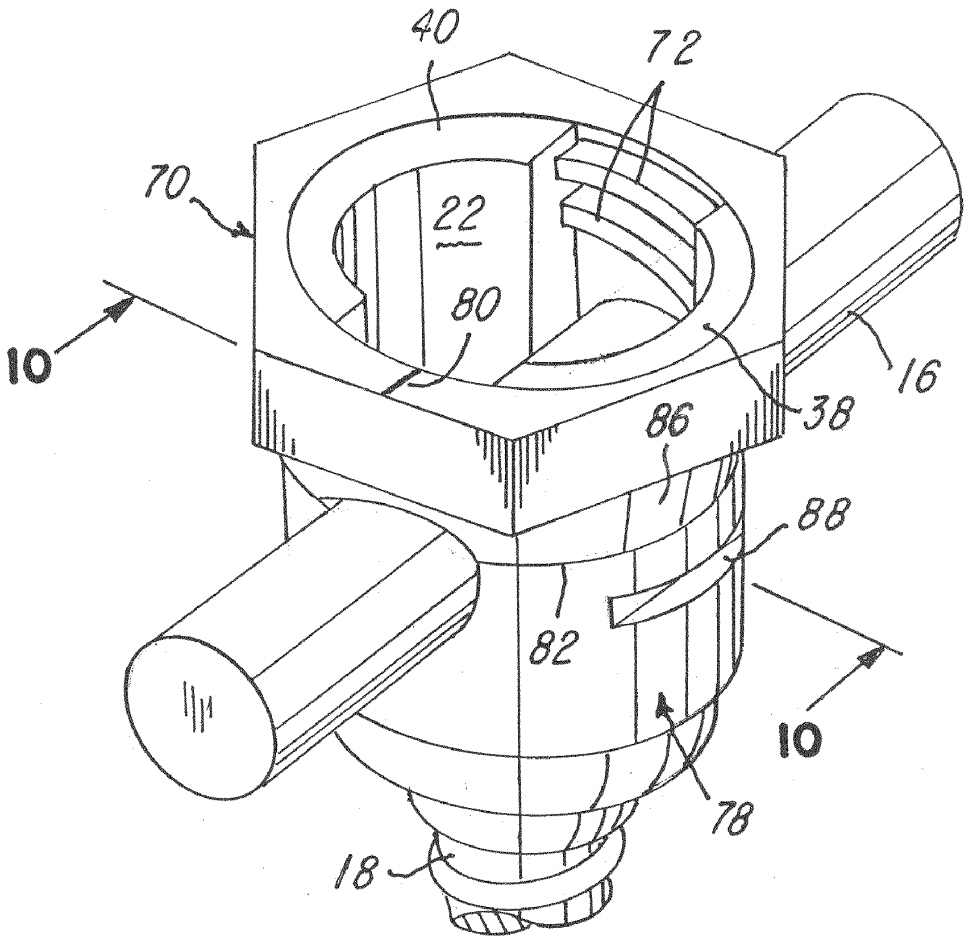

FIG-1

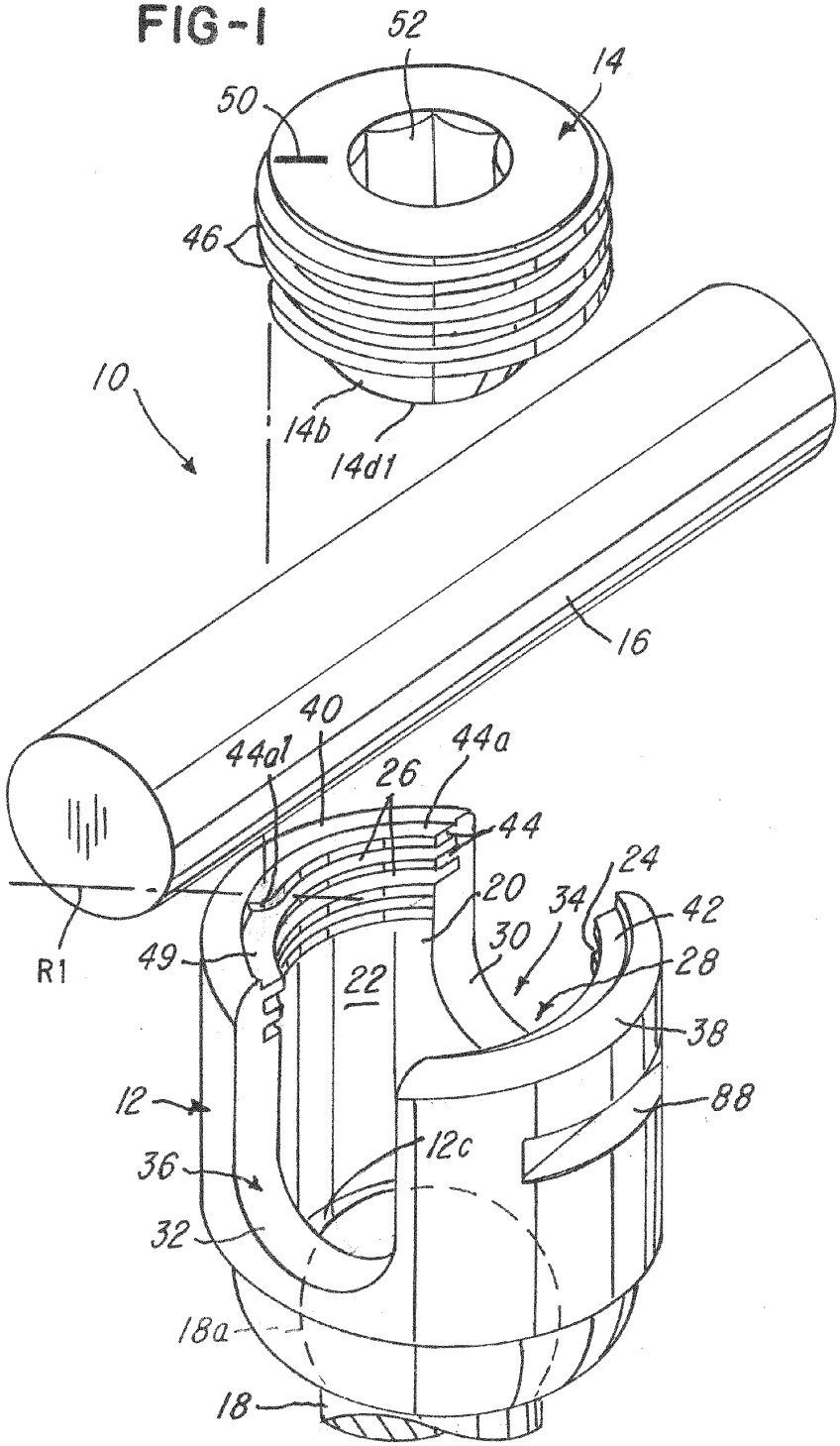
52
14
50
46
10
14b
14d1
16
40
44a1
26
44a
44
24
20
34
42
30
28
R1
49
22
38
12
88
12c
36
32
18a
18

FIG-2

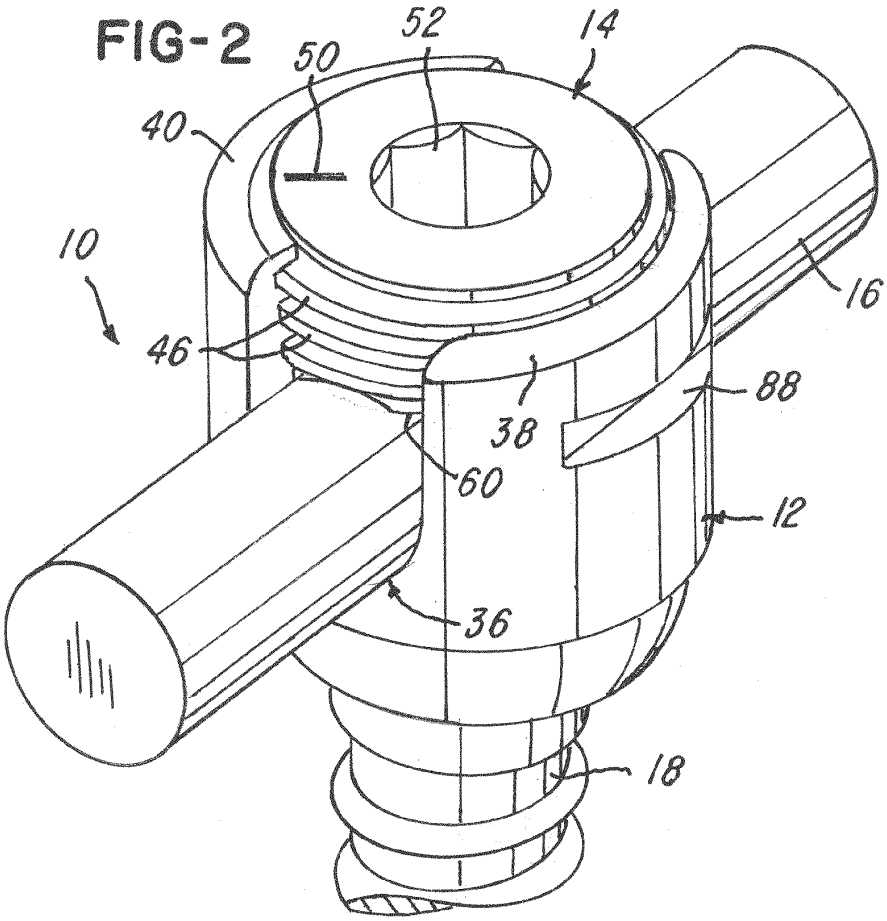
52
14
50
40
10
16
46
88
38
60
12
36
18

FIG-3

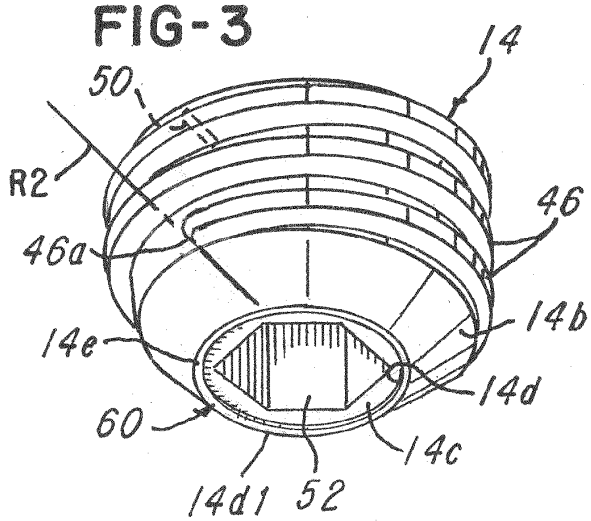
14
50
R2
46
46a
14b
14e
14d
60
14c
14d1
52

FIG-4

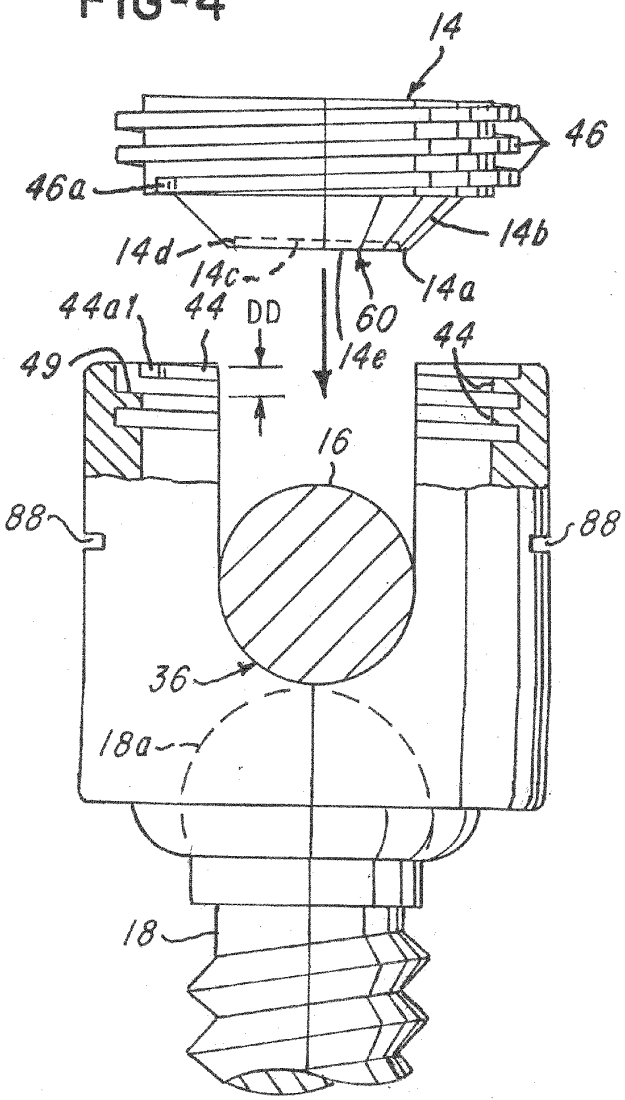
14
46
46a
14b
14d
14c
14a
60
44a1
44
DD
14e
44
49
16
88
88
36
18a
18

FIG-5

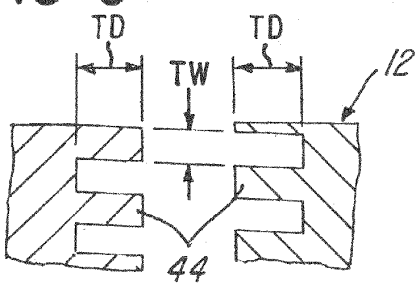
TD
TD
TW
12
44

FIG-6

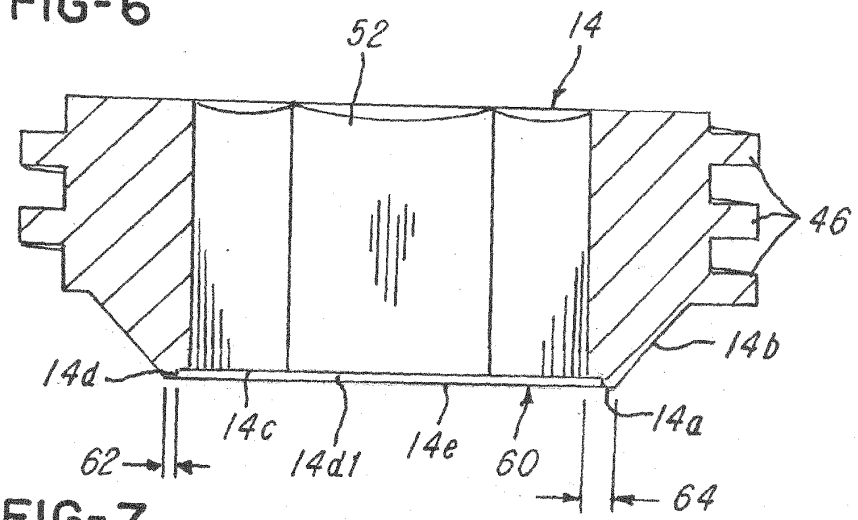
52
14
46
14b
14d
14c
14d1
14e
60
14a
62
64

FIG-7

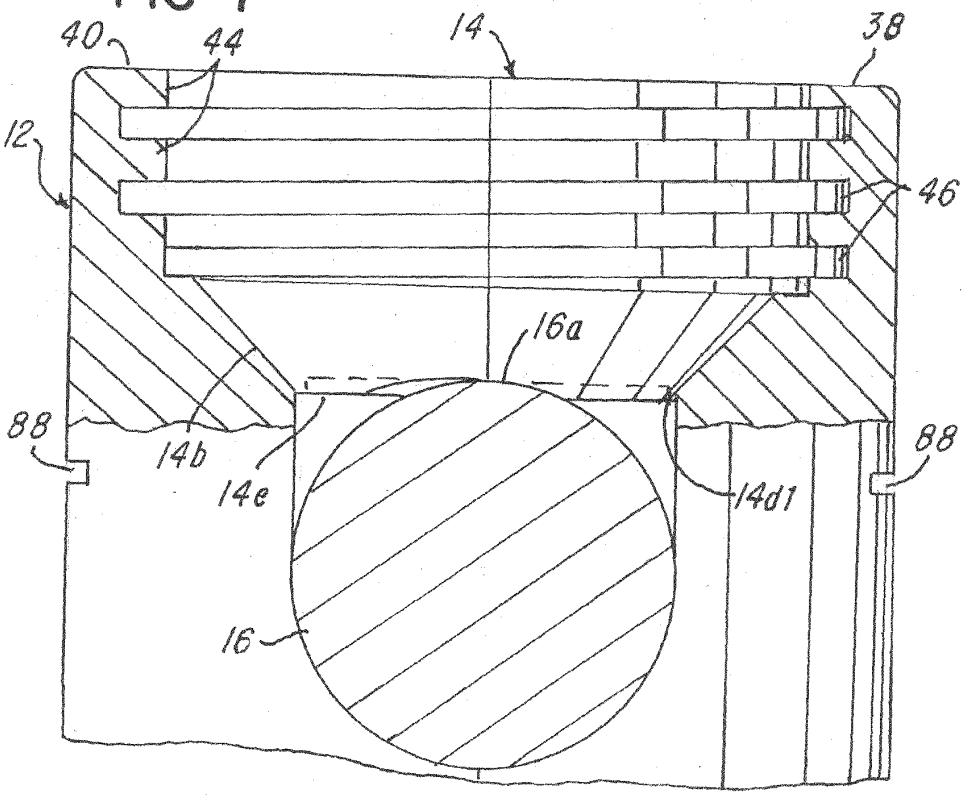
40
44
14
38
12
46
16a
88
14b
14e
14d1
88
16

FIG-8

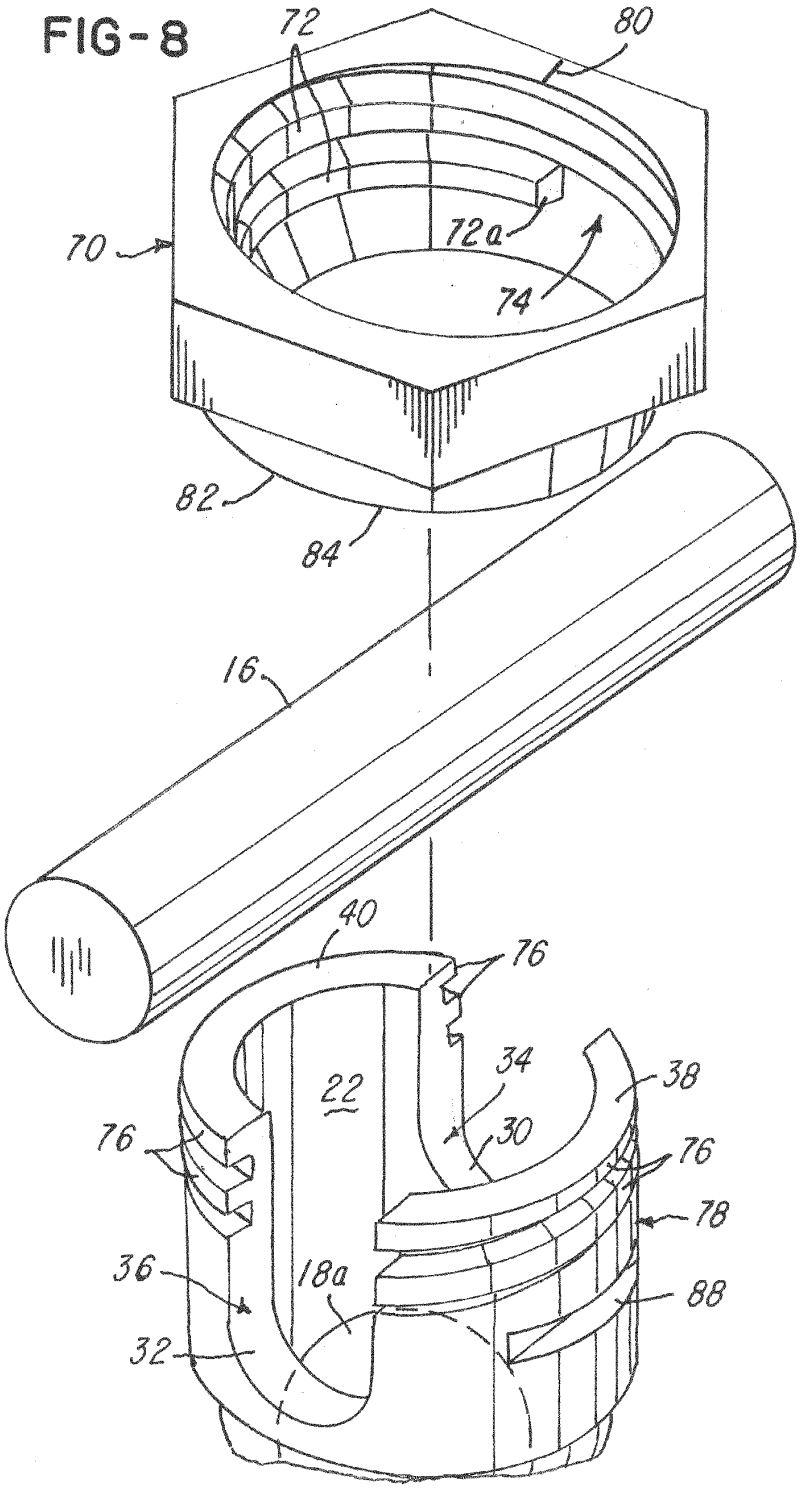

FIG-9

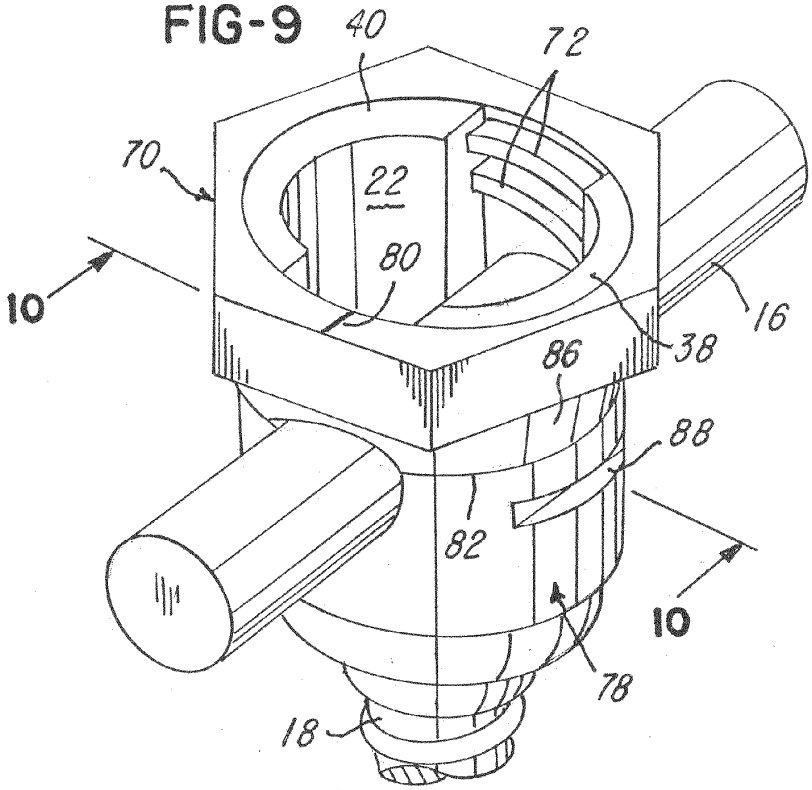
40
72
70
22
80
10
16
38
86
88
82
10
78
18

FIG-10

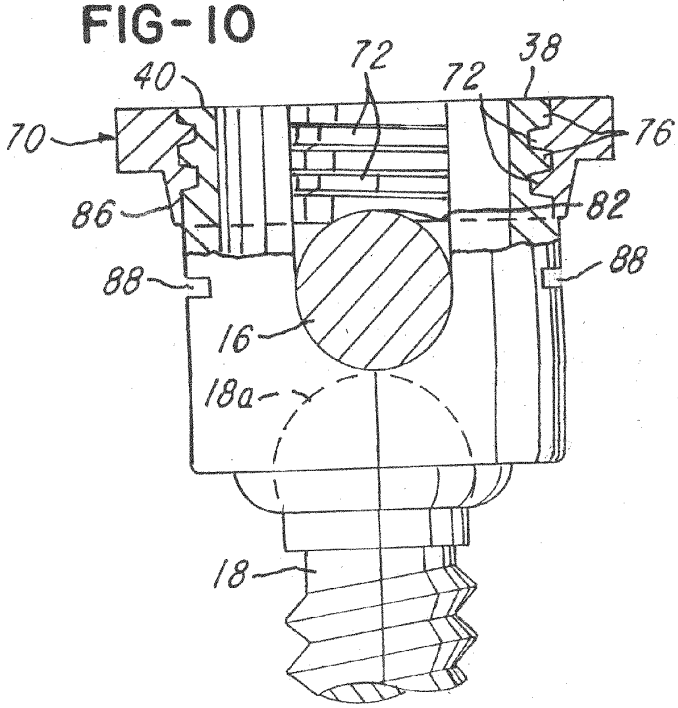
40
72
72
38
70
76
86
82
88
88
16
18a
18

SPINAL IMPLANT LOCKING MEMBER WITH IMPROVED GUIDANCE, TACTILE AND VISUAL FEEDBACK

BACKGROUND OF THE INVENTION

[0001] 1. Field of the Invention

[0002] This invention relates to a spinal implant system and method and, more particularly, to an implant having and a lock aid that provides at least one of improved guidance, tactile or visual feedback or enhanced fixation and locking of a cap in a receiver of the implant.

[0003] 2. Description of the Related Art

[0004] Spinal implant screws, such as those used in the pedicles of the thoracic and lumbar spines are commonly used today by spinal surgeons. In a typical prior art screw, there are three main components: a screw shaft, a polyaxial tulip head or receiver incorporating a female thread, and a locking cap incorporating a male thread. The purpose of the threaded locking cap is to affix a spinal stabilizing element, typically a cylindrical rod, to the screw assembly.

[0005] During the surgical procedure the surgeon must forcefully seat the rod into the tulip via rotation of the locking cap. Such seating affects the desired correction of the spine. Therefore, the threads of the locking cap and tulip must bear high torque loading which can result in cross-threading and/or thread failure upon initial thread engagement.

[0006] Furthermore, the cap may be difficult to engage in the tulip or receiver under such conditions because the thread start-point of both the male and female threads are difficult to identify in a surgical environment. In standard threading, there is little, if any, tactile feedback that the thread is engaged. These problems are exacerbated by the necessity to make thread dimensions very small in order to limit the size of the implant due to anatomical constraints.

[0007] Due to such size constraints and strength requirements, a thread with depth greater than thread width is desirable. However, such threads are typically difficult to engage

[0008] What is needed, therefore, is a spinal implant incorporating a thread design that prevents cross threading of the small-pitch threads of the locking cap/tulip pair, achieves high connection strength immediately after initial thread engagement and offers improved tactile feedback of thread engagement to the surgeon.

[0009] Utilizing blunt-tip threads for the prevention of cross threading was first invented by Higbee in 1891 (U.S. Pat. No. 447,775). Myriad spinal screw designs have been put forth, exemplified by U.S. Pat. No. 5,474,555, however none address the combined issues of threaded cap guidance, visual feedback, and tactile feedback. All of these patents are incorporated herein by reference and made a part hereof.

[0010] Some prior art polyaxial screw designs are shown and identified in U.S. Patent Publication Nos. 2007/0043357, 2007/0123867, 2006/0155278, 2007/0123862, 2007/0093827, 2008/0071277, 2008/0097457 and 2008/0249576, all of which are incorporated herein by reference and made a part hereof.

[0011] What is needed, therefore, is a system and method that improves the polyaxial screw by providing at least one improved locking aid in the form of at least one of a visual feedback, tactile feedback or enhanced fixations or locking of the cap on the tulip.

SUMMARY OF THE INVENTION

[0012] It is, therefore, one object of the embodiment to provide an improved polyaxial screw.

[0013] Another object of the embodiment is to provide an improved polyaxial screw having at least one of visual feedback, tactile feedback or enhanced locking to facilitate providing a locking aid.

[0014] Still another object of the embodiment is to provide a cap that comprises a surface for facilitating guiding and mounting the cap on the receiver.

[0015] Another object of one embodiment is to provide a cap having indicia for indicating a start of a thread used to thread the cap on the receiver or tulip.

[0016] Still another object of one embodiment is to provide a cap comprising at least one deformable area, such as a deformable ring, for facilitating locking the cap on the receiver and thereby locking a rod to a screw.

[0017] Another object of one embodiment is to provide a polyaxial screw that can utilize one or more of the locking aids described herein.

[0018] In one aspect, one embodiment comprises an implant comprising a receiver having at least one internal wall defining a bore, at least a portion of the receiver having a receiver thread, the receiver further comprising a rod-receiving channel in communication with the bore, the rod-receiving channel being adapted to receive a rod, a polyaxial screw for receipt in the bore, a cap having a cap thread for mating with the receiver thread to permit the cap to be screwed on the receiver in order to lock the rod in the rod-receiving channel of the receiver, and a lock aid associated with at least one of the receiver or the cap for facilitating providing at least one of a tactile feedback when the cap is mounted on the receiver, a visual feedback for facilitating mounting the cap on the receiver, or an enhanced fixation between the cap and the rod when the cap is received on the receiver.

[0019] In another aspect, another embodiment comprises an implant cap for mounting on an implant receiver that receives and supports a rod in a rod-receiving area of the implant receiver and that has receiver threads, the implant cap comprising a body having an area for receiving a tool for rotatably driving the implant cap, a cap thread for cooperating with the receiver thread to permit the implant cap to be screwed and mounted on or in the implant receiver in order to lock the rod in the rod-receiving area of the implant receiver, and a lock aid for providing at least one of tactile feedback, visual feedback or enhanced fixation when the implant cap is screwed on the implant receiver.

[0020] In still another aspect, another embodiment comprises an implant comprising a receiver having a at least one internal wall defining a bore, at least a portion of the receiver having a receiver thread, the receiver further comprising a rod-receiving channel in communication with the bore, the rod-receiving channel being adapted to receive a rod, a polyaxial screw for receipt in the bore, a cap having a cap thread for mating with the receiver thread to permit the cap to be screwed on the receiver in order to lock the rod in the rod-receiving channel of the receiver, and the receiver thread is defined by a female thread, a leading portion of the female thread being truncated or cut out.

[0021] In still another aspect, another embodiment comprises an implant comprising a receiver having a at least one internal wall defining a bore, at least a portion of the receiver having a receiver thread, the receiver further comprising a rod-receiving channel in communication with the bore, the rod-receiving channel being adapted to receive a rod, a polyaxial screw for receipt in the bore, a cap having a cap thread for mating with the receiver thread to permit the cap to

be screwed on the receiver in order to lock the rod in the rod-receiving channel of the receiver, and the cap comprising a surface for facilitating guiding the cap on the receiver and aligning the cap thread with the receiver thread so that the cap can be screwed on the receiver.

[0022] In still another aspect, another embodiment comprises an implant comprising a receiver having a at least one internal wall defining a bore, at least a portion of the receiver having a receiver thread, the receiver further comprising a rod-receiving channel in communication with the bore, the rod-receiving channel being adapted to receive a rod, a polyaxial screw for receipt in the bore, and a cap having a cap thread for mating with the receiver thread to permit the cap to be screwed on the receiver in order to lock the rod in the rod-receiving channel of the receiver, the cap comprises a deformable area adapted to engage the rod and deforming on it after the rod is received in the receiver and the cap is screwed on the receiver.

[0023] These and other objects and advantages of the invention will be apparent from the following description, the accompanying drawings and the appended claims.

BRIEF DESCRIPTION OF THE DRAWINGS

[0024] FIG. **1** is a exploded view of one embodiment of the invention;

[0025] FIG. **2** is an assembled view of the embodiment shown in FIG. **1**;

[0026] FIG. **3** is a view of a cap illustrating a guiding surface;

[0027] FIG. **4** is a view illustrating a drop down distance and the mounting of the cap on a receiver or tulip;

[0028] FIG. **5** is a fragmentary sectional view showing various details of the female threads in the receiver;

[0029] FIG. **6** is fragmentary sectional view of the cap shown in FIGS. **3** and **4**;

[0030] FIG. **7** is a view of a deformation of at least a portion of the cap as it engages the rod;

[0031] FIG. **8** is an exploded view of another embodiment illustrating an external cap;

[0032] FIG. **9** is an assembled view of the embodiment shown in FIG. **8**; and

[0033] FIG. **10** is a fragmentary sectional view taken along the line **10-10** in FIG. **9**.

DETAILED DESCRIPTION OF THE PREFERRED EMBODIMENTS

[0034] Referring now to FIGS. **1-10**, an implant, polyaxial screw, system and method **10** are shown. In a first illustrative embodiment, the system **10** comprises a receiver **12** and a cap **14** which is threadably mounted on the tulip or receiver **12**. The receiver **12** receives the cap **14** after a rod **16** and a polyaxial screw **18** are received in the receiver **12** in a manner conventionally known and as shown in FIG. **1**.

[0035] The receiver **12** comprises at least one internal wall **20** defining a bore **22**. At least a portion of the receiver **12** comprises a plurality of female threads, such as threads **24** and **26**. In this regard, note that the receiver **12** comprises a rod-receiving channel **28**. The receiver **12** comprises a first generally U-shaped wall **30** that defines a first rod-receiving opening **34** and a generally opposed second generally U-shaped wall **32** that defines a second rod-receiving opening **36** as shown. The first and second rod-receiving openings **34** and **36** cooperate to define the rod-receiving channel **28** for receiving the rod **16**. Note that the receiver **12** further comprises a first arcuate wall **38** and a generally opposing second arcuate wall **40** that lie between the first and second rod-receiving openings **34** and **36** as shown.

[0036] The first arcuate wall **38** comprises first arcuate wall threads **42** and the second arcuate wall **40** comprises second arcuate wall threads **44** as shown. The first and second arcuate wall threads **42** and **44** cooperate to define the receiver threads for threadably receiving male cap threads **46** on the cap **14** so that the cap **14** can be screwed onto the receiver **12** in order to lock the rod **16** in the rod-receiving channel **28** of the receiver **12**.

[0037] The implant and system **10** comprises at least one or a plurality of lock aids associated with at least one of the receiver **12** or cap **14** for facilitating providing at least one of a tactile feedback system, method or means when the cap **14** is mounted on the receiver **12**, a visual feedback system, method or means for facilitating aligning and/or mounting the cap **14** on the receiver **12** or an enhanced fixation system, method or means between the cap **14** and the rod **16** when the cap **14** is threadably received on the receiver **12**.

[0038] In one illustrative embodiment, the lock aid comprises the tactile feedback system, method or means mentioned. In this regard, note in FIG. **1** that the first thread **44***a* of the second arcuate wall threads **44** defines a starting thread that is shorter than at least one other of the second arcuate wall threads **44** in order to define a cut-out area **49** for facilitating receiving a leading edge portion **46***a* (FIG. **3**) of a male thread of the male cap thread **46**. The surgeon or user can feel the cap **14** drop down into the receiver **12** when the leading edge portion **46***a* is aligned with the cut-out area **49**. This design provides tactile feedback when the cap **14** is received on the receiver **12**. This feature is particularly useful during surgery where sometimes it is difficult for the surgeon to see the cap **14** relative to the receiver **12**. In the illustration being shown, the leading edge portion **46***a* of the male cap thread **46** may be identified with indicia **50** which provides the visual feedback of the location of the leading edge portion **46***a* of the cap **14**. The cut-out area **49** and its cooperation and reception of the leading edge portion **46***a* are adapted to permit the drop down and define the lock aid.

[0039] Notice in FIG. **3** that the leading edge portion **46***a* of the male cap thread **46** is truncated as shown. Likewise, the leading edge portion **44***a***1** of the first thread **44***a* is also truncated. In one illustrative embodiment, the leading edge portion **44***a***1** of the first thread **44***a* of the receiver **12** and the leading edge portion **46***a* of the male cap thread **46** of the cap **14** are truncated and adapted so that when these leading edge portions **44***a***1** and **46***a* are adjacent each other and initially pass each other when the cap **14** is mounted on the receiver **12**, the leading edge portions **44***a***1** and **46***a* move relative to each other a drop down distance DD (FIG. **4**), which in the illustration being described is greater than at least one thread pitch associated with the second arcuate wall threads **44**. It should be understood that the leading edge portion **44***a***1** lies along the first radial line R**1** (FIG. **1**), and the leading edge portion **46***a* of the male cap thread **46** on the cap **14** lies along a second radial line R**2** (FIG. **3**). In the illustration being described, note that the first radial line R**1** is generally perpendicular to an axis of the receiver **12** and the leading edge portion **46***a* that lies in along the second radial line R**2** is generally perpendicular to an axis of the cap **14**. Note also that in the illustration being described, the first and second radial lines R**1** and R**2** become generally parallel when the first and second lead-

ing edge portions **44***a***1** (FIG. **1**) and **46***a* (FIG. **3**) initially align when the cap **14** is mounted on the receiver **12**.

[0040] As illustrated in FIG. **5**, note that the second arcuate wall threads **44** on the receiver **12** comprise a thread depth TD (FIG. **5**) that is greater than a thread width TW as shown. It has been found that this relative relationship of the thread depth TD to the thread width TW further facilitates providing the tactile feedback and locking of the cap **14** in the receiver **12**. In the illustration being described, the second arcuate wall threads **44** comprise at least a portion having the thread depth TD that is greater than at least one of the thread width or pitch and is adapted to define the lock aid.

[0041] As mentioned earlier, the cap **14** comprises the indicia **50** which is aligned with the leading edge portion **46***a* (FIG. **3**) that provides a visual notice or feedback of the leading end portion **46***a*, which also provides a locking aid to the user. In the illustration being described, the indicia **50** may be an engraved or embossed or raised mark or indicia or it could be a permanent marking on the surface **14***a* of the cap **14**.

[0042] Returning to FIG. **4**, note that the drop down distance DD is greater than a cumulative distance between a pitch between adjacent threads of the second arcuate wall threads **44** and is also greater than the thread width TW (FIG. **5**).

[0043] As illustrated in FIGS. **1**, **3** and **4**, note that a bottom **14***b* of the cap **14** has a surface that is adapted to provide the lock aid by facilitating guiding the cap **14** on the receiver **12** to facilitate aligning the cap **14** and the male cap threads **46** and the leading edge portion **46***a* with the cut-out area **49** of the receiver **12** so that the cap **14** can be easily guided and screwed onto the receiver **12**. In the embodiment being described, notice that the bottom **14***b* is frusto-conical, but it should be understood that the surface shape could be any suitable shape adapted to guide the cap **14** into the bore **22** and onto the receiver **12**. For example, the surface could have an arcuate, curved or semi-spherical shape such that the bottom **14***b* is adapted to facilitate aligning and guiding the cap **14** onto the receiver **12** so that the cap **14** can be easily screwed onto the receiver **12**.

[0044] In the illustration being described, notice that the bottom **14***b* terminates at an end **14***c* (FIG. **6**). In the illustration being described, the cap **14** has a tool-receiving opening **52** (FIG. **2**) for receiving a tool for rotatably driving the cap **14**. In the illustration being shown, the tool is a hex wrench (not shown), but it could be any suitable tool adapted to rotatably drive the cap **14**.

[0045] Returning to FIGS. **3**, **4** and **6**, note that the cap **14** comprises a deformable area **60** that is adapted to provide the lock aid. In the illustration being described, the deformable area **60** comprises a deformable ring **14***d* that is monolithically and integrally formed with the cap **14**, as best illustrated in FIG. **6**. As shown in FIG. **2**, the cap **14** is received on the receiver **12** and screwed into the receiver **12** until a bottom edge or surface **14***e* engages the rod **16**. The deformable ring **14***d* and the deformable area **60** deforms about the rod **16** as the cap **14** is screwed into the receiver **12** and as it compresses against the rod **16** as illustrated in FIGS. **2** and **7**. The engagement of the surface **14***d***1** against the rod surface **16***a* provides a friction engagement and causes the surfaces to become cold-welded in the illustration. In one illustrative embodiment, the monolithic ring comprises a width of between 0.120-0.280 inches.

[0046] In the illustration being described, it should be understood that the cap **14** engages and becomes cold-welded onto the receiver **12** in less than or equal to about two-and-one-half turns of the cap **14** after the cap **14** is received in the receiver **12**. Also, the deformable ring **14***d* and deformable area **60** become cold-welded or secured to or against the rod **16** in less than one full turn of the cap **14** after the surface **14***e* engages the rod **16**. Advantageously, the locking of the rod **16** onto a head **18***a* of the polyaxial screw **18** has been achieved with less than three or even two-and-one-half turns of the cap **14** in the receiver **12** as mentioned. This reduces the overall length of the cap **14** and the receiver **12**, while achieving locking of the rod **16** to the head **18***a* with an equivalent or even greater amount of locking strength than the locking devices used in the past.

[0047] As best seen in FIGS. **3** and **6**, note that the locking ring **14***d* comprises a locking ring wall or surface **14***d***1** (FIG. **6**) that is generally parallel to an axis of the cap **14** and generally perpendicular to the end **14***c* as shown. Note also that the surface **14***d***1** comprises a thickness or dimension **62** which is generally smaller than a cross-sectional thickness **64** of the dimension defined by an inner surface **14***a* and the bottom **14***b*, as illustrated in FIG. **6**. This dimension **62** is adapted and selected to enable the deformable ring **14***d* or deformable area **60** to deform, while the end **14***c* remains undeformed as shown in FIG. **7**. In the illustration being described, the deformable ring **14***d* provides an enhanced fixation or even a cold-weld between the cap **14** and the rod **16** when the cap **14** is received on the receiver **12**.

[0048] Advantageously, the implant, system and method **10** described herein provide an improved implant with a locking aid that can comprise the tactile feedback, visual feedback or enhanced fixation either individually or in any combination desired.

[0049] During use, the polyaxial screw **18** is received in the bore **22** and the head **18***a* is received in a seat **12***c* of the receiver **12**. The polyaxial screw **18** is screwed into bone and the receiver **12** receives the rod **16** and the receiver **12** and rod **16** are positioned in a manner conventionally known. The cap **14** is received on a tool and the user guides the cap **14** into the bore **22** using the tactile feedback that the bottom **14***b* provides as it engages and guides the cap **14** as it engages the second arcuate wall threads **44** in the receiver **12** and guides the cap **14** into alignment for threading in the receiver **12**. After the positioning is achieved, the surgeon or user may use the at least one or a plurality of the tactile feedback in the form of the truncated leading edge portion **46***a* and which is aligned in the cut-out area **49**. The user may use the indicia **50** to facilitate aligning the thread and the tactile feedback of the cap **14** dropping down in the receiver **12** the drop down distance DD (FIG. **4**) as the cap **14** is positioned on the receiver **12**.

[0050] After the cap **14** is mounted on the receiver **12** it is screwed using the tool (not shown) until the deformable ring **14***d* deforms on the rod **16**, thereby providing the enhanced fixation by deforming on the rod **16**, thereby locking the rod **16** against the head **18***a* of the polyaxial screw **18**.

[0051] Although not shown, it should be appreciated that other conventional components may be used with the receiver **12**, such as an internal compression member (not shown) that is situated between the rod **16** and the head **18***a*.

[0052] Advantageously, the implant, system and method **10** described herein provides an enhanced or improved locking of the rod **16** on the receiver **12**. This embodiment has been

shown with the internal cap **14**. FIGS. **8** and **9** illustrate another embodiment of the invention with like parts having the same part numbers.

[0053] In the embodiment of FIGS. **8-10**, an external cap **70** having a plurality of internal threads **72** and a receiver **78** are shown. The threads **72** have at least one thread that is truncated in the manner described earlier herein relative to the second arcuate wall threads **44**. Notice that the end portion **72***a* (FIG. **8**) of the internal thread **72** is truncated and performs the same or similar function as the leading edge portion **44***a***1** (FIG. **1**) in the embodiment described earlier herein. In this regard, notice that the truncated portion of thread **72** defines a cut-out area **74** (FIG. **8**) for facilitating receiving and starting male threads **76** on the receiver **78**. As with the prior embodiment, the cap **70** may comprise an indicia **80** (FIG. **9**) for providing a visual aid or guide as to the start of the end portion **72***a* as shown.

[0054] As with the embodiment described earlier herein, note that the embodiment of FIGS. **8** and **9** also comprises a deformable area **82** (FIGS. **8-10**) in the form of a monolithic deformable ring **84** that is adapted and dimensioned to deform about the rod **16**, as illustrated in FIGS. **9** and **10**, when the cap **70** is screwed onto the receiver **78** as illustrated. In this regard, the deformable area **82** comprises the monolithic and integrally formed ring **84** that is similar in shape and construction to the deformable ring **14***d* described earlier herein relative to FIG. **4**. As illustrated in FIG. **10**, notice that the cap **70** comprises a frusto-conical surface **86** which facilitates guiding the cap **70** onto the receiver **12** similar to the bottom **14***b* of the embodiment described earlier herein.

[0055] Thus, as with the embodiment described earlier, the embodiment shown in FIGS. **8-10** provide the locking aid that comprises at least one or a plurality of the tactile feedback, visual feedback and enhanced fixation between the cap **70** and the receiver **78** to facilitate locking of the rod **16** and polyaxial screw **18** in the receiver **78**.

[0056] In the illustrations being described, the receivers **12** and **78** may comprise notched out areas **88** (FIGS. **2** and **9**) for enabling the user or surgeon to position or hold the receiver **12** using a conventional fork tool (not shown).

[0057] While the system, apparatus and method herein described, and the form of apparatus for carrying this method into effect, constitute preferred embodiments of this invention, it is to be understood that the invention is not limited to this precise method and form of apparatus, and that changes may be made in either without departing from the scope of the invention, which is defined in the appended claims.

What is claimed is:

1. An implant comprising:

a receiver having at least one internal wall defining a bore, at least a portion of said receiver having a receiver thread, said receiver further comprising a rod-receiving channel in communication with said bore, said rod-receiving channel being adapted to receive a rod;

a polyaxial screw for receipt in said bore;

a cap having a cap thread for mating with said receiver thread to permit said cap to be screwed on said receiver in order to lock said rod in said rod-receiving channel of said receiver; and

a lock aid associated with at least one of said receiver or said cap for facilitating providing at least one of a tactile feedback when said cap is mounted on said receiver, a visual feedback for facilitating mounting said cap on said receiver, or an enhanced fixation between said cap and said rod when said cap is received on said receiver.

2. The implant as recited in claim **1** wherein said receiver thread is defined by a female thread, a leading portion of said female thread being truncated or cut out and adapted to define said lock aid.

3. The implant as recited in claim **2** wherein said cap thread is defined by a male thread, a leading portion of said male thread being truncated or cut out and adapted to define said lock aid.

4. The implant as recited in claim **3** wherein said leading portion of said female thread of said receiver and said leading portion of said a male thread of said cap each being truncated and adapted so that when said leading portions are adjacent each other and initially pass each other when said cap is mounted on said receiver, said leading portions move relative to each other a drop-down distance that is greater than or equal to at least one thread pitch.

5. The implant as recited in claim **3** wherein said leading portion of said female thread lies along a first radial line that is generally perpendicular to an axis of said receiver and said leading portion of said male thread lies along a second radial line that is generally perpendicular to an axis of said receiver, said first and second radial lines being generally parallel when said first and second leading portions initially align when said cap is mounted on said receiver.

6. The implant as recited in claim **1** wherein said receiver thread comprises at least a portion having a thread depth that is greater than a thread width, both of which are adapted to define said lock aid.

7. The implant as recited in claim **1** wherein said rod-receiving channel comprises a first rod-receiving opening and a generally opposed second rod-receiving opening in said receiver, said at least one internal wall comprising a first arcuate wall between said first and second rod-receiving openings and a second arcuate wall that generally opposes said first arcuate wall, said first arcuate wall having first arcuate wall threads and said second arcuate wall having second arcuate wall threads, said first and second arcuate wall threads cooperating to define said receiver thread,

said first arcuate wall threads having a starting thread that is shorter than at least one other of said first arcuate wall threads to define a cut-out zone for facilitating receiving a starting thread of said cap thread, thereby providing said tactile feedback when said cap is received on said receiver, said first and second arcuate wall threads cooperating with said cap thread to provide said lock aid.

8. The implant as recited in claim **1** wherein said receiver threads comprises at least a portion having a thread depth that is greater than at least one of a thread width or pitch and being adapted to define said lock aid.

9. The implant as recited in claim **1** wherein said cap thread define at least one male thread having a starting end, said cap further comprising an indicia on a surface that provides notice of said starting end, said indicia being adapted to define said lock aid.

10. The implant as recited in claim **9** wherein said indicia is a line on a top surface of said cap, said line being generally aligned with said starting end.

11. The implant as recited in claim **1** wherein at least a portion of said receiver thread is adapted on said receiver to permit a start of said cap thread and said cap to drop down a drop down distance in said receiver, said drop down distance being selected to define said lock aid.

12. The implant as recited in claim **11** wherein said drop down distance is greater than or equal to the distance of a pitch between adjacent threads of receiver thread.

13. The implant as recited in claim **2** wherein said receiver thread are integral with said at least one internal wall and said cap thread is on an inner diameter surface of the cap so that the cap can be screwed onto an outer surface of said receiver, said cap having an integral deformable ring on a bottom surface of said cap.

14. The implant as recited in claim **1** wherein said cap has a surface adapted to provide said lock aid by facilitating guiding said cap on said receiver to facilitate aligning said cap thread with said receiver thread so that said cap can be screwed on said receiver.

15. The implant as recited in claim **14** wherein said surface is curved, arcuate, frusto-conical or semi-spherical and situated on an end of said cap, said surface being adapted to engage an open end of said receiver and guide said cap thread toward and into engagement with said receiver thread.

16. The implant as recited in claim **1** wherein said cap comprises a deformable area adapted to provide said lock aid, said deformable area engaging said rod and deforming on it after said rod is received in said receiver and said cap is rotated and screwed on said receiver.

17. The implant as recited in claim **16** wherein said deformable area becomes cold welded on said rod when said cap has been screwed on said receiver in less than or equal to one revolution after initial rod contact.

18. The implant as recited in claim **16** wherein said deformable area is a ring in a rod-engaging end of said cap.

19. The implant as recited in claim **18** wherein said ring is a monolithic ring integrally formed in said rod-engaging end of said cap.

20. The implant as recited in claim **1** wherein said cap comprises an aperture in a rod-engaging end, said cap having a monolithic and deformable ring surrounding said aperture that is adapted to provide said lock aid, said monolithic and deformable ring engaging said rod and deforming on it after said rod is received in said receiver and said cap is screwed on said receiver.

21. The implant as recited in claim **20** wherein said cap comprises a generally planar cap bottom, said monolithic and deformable ring being generally perpendicular to said generally planar cap bottom.

22. The implant cap as recited in claim **21** wherein said generally planar cap bottom and said monolithic and deformable ring have a diameter smaller than that of the overall cap diameter.

23. The implant as recited in claim **20** wherein said rod-engaging end of said cap comprises a frusto-conical shape, said monolithic and deformable ring being integral with an end of said frusto-conical shape.

24. The implant as recited in claim **2** wherein said cap comprises a deformable area that engages said rod and deforms on it after said rod is received in said receiver and said cap is screwed on said receiver.

25. The implant as recited in claim **24** wherein said deformable area is a ring formed in a rod-engaging end of said cap.

26. The implant as recited in claim **25** wherein said ring is a monolithic ring formed in said rod-engaging end of said cap.

27. The implant as recited in claim **26** wherein said rod-engaging end of said cap comprises a frusto-conical shape, said monolithic ring is integral with an end of said frusto-conical shape.

28. An implant cap for mounting on an implant receiver that receives and supports a rod in a rod-receiving area of said implant receiver and that has receiver threads, said implant cap comprising:

a body having an area for receiving a tool for rotatably driving said implant cap;

a cap thread for cooperating with said receiver thread to permit said implant cap to be screwed and mounted on or in said implant receiver in order to lock said rod in the rod-receiving area of said implant receiver; and

a lock aid for providing at least one of tactile feedback, visual feedback or enhanced fixation when said implant cap is screwed on said implant receiver.

29. The implant cap as recited in claim **28** wherein said lock aid comprises indicia on a surface that provides notice of a starting end of said cap thread.

30. The implant cap as recited in claim **29** wherein said indicia is a line on a top surface of said implant cap, said line being generally aligned with said starting end.

31. The implant cap as recited in claim **28** wherein said implant cap has a surface, said surface facilitating guiding said body on said implant receiver to facilitate aligning said cap thread with said receiver thread so that said implant cap can be screwed on said implant receiver.

32. The implant cap as recited in claim **31** wherein said surface is a frusto-conical, arcuate, curved or semispherical at an end of said implant cap.

33. The implant cap as recited in claim **28** wherein said body comprises a deformable area that deforms on said rod after said rod is received in said implant receiver and said implant cap is screwed on said implant receiver.

34. The implant cap as recited in claim **33** wherein said deformable area is a ring in a rod-engaging end of said implant cap.

35. The implant cap as recited in claim **34** wherein said ring is a monolithic ring integrally formed in said rod-engaging end of said implant cap.

36. The implant cap as recited in claim **28** wherein said implant cap comprises an aperture in a rod-engaging end, said implant cap having a monolithic and deformable ring surrounding said aperture, said monolithic and deformable ring engaging said rod and deforming on it after said rod is received in said implant receiver and said implant cap is screwed on said implant receiver.

37. The implant cap as recited in claim **28** wherein said implant cap comprises a cap bottom, said monolithic and deformable ring being generally opposed to said cap bottom.

38. The implant cap as recited in claim **37** wherein said cap bottom is generally planar and said monolithic and deformable ring is generally perpendicular to said cap bottom.

39. The implant cap as recited in claim **38** wherein said generally planar cap bottom and said monolithic and deformable ring have a diameter smaller than that of the overall cap diameter.

40. The implant cap as recited in claim **36** wherein said rod-engaging end of said implant cap comprises a frusto-conical, semi-spherical, arcuate or curved shape, said monolithic and deformable ring being integrally formed in said rod-engaging end.

41. An implant comprising:

a receiver having a at least one internal wall defining a bore, at least a portion of said receiver having a receiver thread, said receiver further comprising a rod-receiving channel in communication with said bore, said rod-receiving channel being adapted to receive a rod;

a polyaxial screw for receipt in said bore;

a cap having a cap thread for mating with said receiver thread to permit said cap to be screwed on said receiver in order to lock said rod in said rod-receiving channel of said receiver; and

said receiver thread is defined by a female thread, a leading portion of said female thread being truncated or cut out.

42. The implant as recited in claim **41** wherein said cap thread is defined by a male thread, a leading portion of said male thread being truncated or cut out.

43. The implant as recited in claim **42** wherein said leading portion of a female thread of said receiver and said leading portion of said a male thread of said cap each being truncated and adapted so that when said leading portions are adjacent each other and initially pass each other when said cap is mounted on said receiver, said leading portions move relative to each other a distance that is greater than or equal to the distance of a pitch between adjacent threads of receiver thread.

44. The implant as recited in claim **43** wherein said leading portion of said female thread lies along a first radial line that is generally perpendicular to an axis of said cap and said leading portion of said male thread lies along a second radial line that is generally perpendicular to an axis of said receiver, said first and second radial lines being generally parallel when said first and second leading portions initially engage when said cap is mounted on said receiver.

45. The implant as recited in claim **41** wherein said female thread comprises at least a portion having a thread depth that is greater than a thread width.

46. The implant as recited in claim **41** wherein said rod-receiving channel comprises a first rod-receiving opening and a generally opposing second rod-receiving opening that define a first arcuate wall between said first and second rod-receiving openings and a second arcuate wall that generally opposes said first arcuate wall, said first rod-receiving opening and said second rod-receiving opening interrupting said receiver thread to provide first arcuate wall threads in said first arcuate wall and second arcuate wall threads in said second arcuate wall, said first and second arcuate wall threads cooperating to define said receiver thread,

said first arcuate wall threads having a starting thread that is shorter than at least one other of said first arcuate wall threads to define a cut-out zone for facilitating receiving a starting thread of said cap thread, thereby providing tactile feedback when said cap is received on said receiver, said first and second arcuate wall threads cooperating with said cap thread.

47. The implant as recited in claim **41** wherein said receiver threads comprises at least a portion having a thread depth that is greater than at least one of a thread width or pitch.

48. The implant as recited in claim **41** wherein said cap thread define at least one male thread having a starting end, said cap further comprising an indicia on a surface that provides notice of said starting end.

49. The implant as recited in claim **48** wherein said indicia is a line on a top surface of said cap, said line being generally aligned with said starting end.

50. The implant as recited in claim **41** wherein at least a portion of said receiver thread is adapted on said receiver to permit a start of said cap thread and said cap to drop down a drop down distance in said receiver, said drop down distance being greater than a pitch of said receiver thread.

51. The implant as recited in claim **50** wherein said drop down distance is greater or equal to a distance associated with at least one thread of a pitch between adjacent threads of said receiver.

52. The implant as recited in claim **41** wherein said receiver thread are integral with said at least one internal wall and said cap thread or on an outer diameter of the cap so that the cap can be screwed into said bore.

53. An implant comprising:

a receiver having at least one internal wall defining a bore, at least a portion of said receiver having a receiver thread, said receiver further comprising a rod-receiving channel in communication with said bore, said rod-receiving channel being adapted to receive a rod;

a polyaxial screw for receipt in said bore;

a cap having a cap thread for mating with said receiver thread to permit said cap to be screwed on said receiver in order to lock said rod in said rod-receiving channel of said receiver; and

said cap comprising a surface for facilitating guiding said cap on said receiver and aligning said cap thread with said receiver thread so that said cap can be screwed on said receiver.

54. The implant as recited in claim **53** wherein said surface is curved, arcuate, frusto-conical or semi-spherical and situated on an end of said cap.

55. The implant as recited in claim **53** wherein said cap comprises a deformable area, said deformable area engaging said rod and deforming on it after said rod is received in said receiver and said cap is screwed on said receiver.

56. The implant as recited in claim **55** wherein said deformable area becomes cold welded on said rod when said cap has been screwed on said receiver in less than or equal to one revolution after initial rod contact.

57. The implant as recited in claim **56** wherein said deformable area is a ring in a rod-engaging end of said cap.

58. The implant as recited in claim **57** wherein said ring is a monolithic ring integrally formed in said rod-engaging end of said cap.

59. The implant as recited in claim **58** wherein said monolithic ring has a width of between 0.120-0.280 inches.

60. The implant as recited in claim **53** wherein said cap comprises an aperture in a rod-engaging end, said cap having a monolithic and deformable ring surrounding said aperture, said monolithic and deformable ring engaging said rod and deforming on it after said rod is received in said receiver and said cap is screwed on said receiver.

61. The implant as recited in claim **60** wherein said cap comprises an annular cap seat, said monolithic and deformable ring being generally parallel to said annular cap seat.

62. The implant cap as recited in claim **61** wherein said annular cap seat and said monolithic and deformable ring have a diameter smaller than that of the overall cap diameter.

63. An implant comprising:

a receiver having a at least one internal wall defining a bore, at least a portion of said receiver having a receiver thread, said receiver further comprising a rod-receiving channel in communication with said bore, said rod-receiving channel being adapted to receive a rod;

a polyaxial screw for receipt in said bore; and

a cap having a cap thread for mating with said receiver thread to permit said cap to be screwed on said receiver in order to lock said rod in said rod-receiving channel of said receiver;

said cap comprises a deformable area adapted to engage said rod and deforming on it after said rod is received in said receiver and said cap is screwed on said receiver.

64. The implant as recited in claim **63** wherein said deformable area becomes cold welded on said rod when said cap has been screwed on said receiver in less than or equal to one revolution after initial rod contact.

65. The implant as recited in claim **63** wherein said deformable area is a ring in a rod-engaging end of said cap.

66. The implant as recited in claim **65** wherein said ring is a monolithic ring integrally formed in said rod-engaging end of said cap.

67. The implant as recited in claim **66** wherein said monolithic ring has a width of between 0.120-0.280 inches.

68. The implant as recited in claim **63** wherein said cap comprises an aperture in a rod-engaging end, said cap having a monolithic and deformable ring surrounding said aperture, said monolithic and deformable ring engaging said rod and deforming on it after said rod is received in said receiver and said cap is screwed on said receiver.

69. The implant as recited in claim **68** wherein said cap comprises an annular cap seat, said monolithic and deformable ring being generally parallel to said annular cap seat.

70. The implant cap as recited in claim **69** wherein said annular cap seat and said monolithic and deformable ring have a diameter smaller than that of the overall cap diameter.

* * * * *