US 20060069391A1

(19) United States

(12) Patent Application Publication

Jackson

(10) Pub. No.: US 2006/0069391 A1

(43) Pub. Date: Mar. 30, 2006

(54) SPINAL FIXATION TOOL ATTACHMENT STRUCTURE

(76) Inventor: **Roger P. Jackson**, Prairie Village, KS (US)

Correspondence Address:
LAW OFFICE OF JOHN C. MCMAHON
P.O. BOX 30069
KANSAS CITY, MO 64112 (US)

(21) Appl. No.: **11/272,508**

(22) Filed: **Nov. 10, 2005**

Related U.S. Application Data

(63) Continuation-in-part of application No. 10/996,289, filed on Nov. 23, 2004.
Continuation-in-part of application No. 10/789,149, filed on Feb. 27, 2004.

(60) Provisional application No. 60/630,536, filed on Nov. 23, 2004.

Publication Classification

(51) **Int. Cl.**
A61F 2/30 (2006.01)

(52) **U.S. Cl.** **606/62**

(57) **ABSTRACT**

A tool set for implanting bone screws in a human spine, followed by the implantation of a rod into the bone screws includes end guide tools having flexible back wall flaps that receive opposite ends of the rod and intermediate guide tools that hold the rod in intermediate locations between the end guide tools. Both the end and intermediate guide tools include an attachment structure for operably connecting the guide tool to a bone screw. The attachment structure includes an undercut and/or recess so as to resist splaying and separation of the guide tool from an attached bone screw.

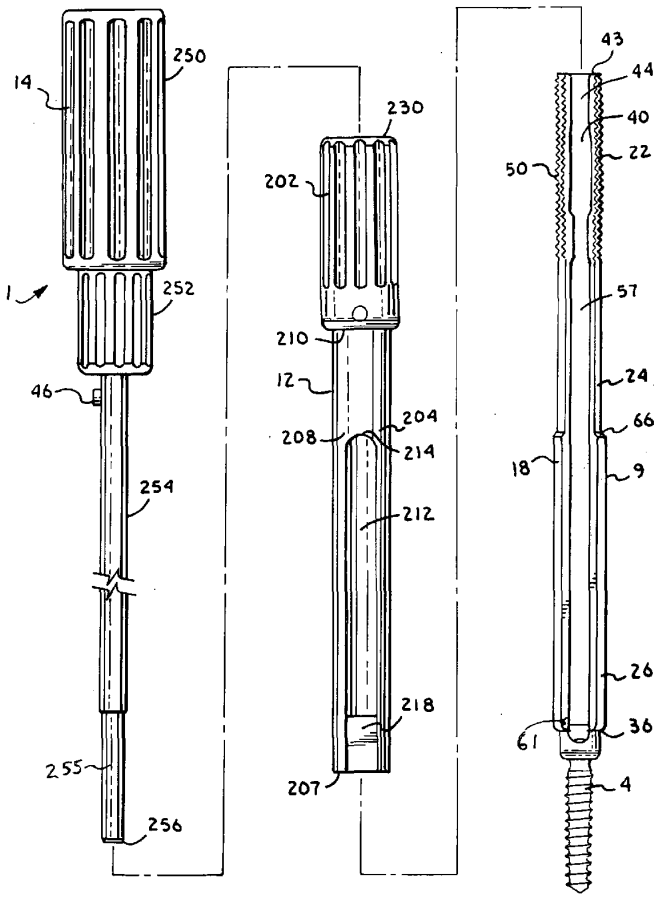

Fig.1.

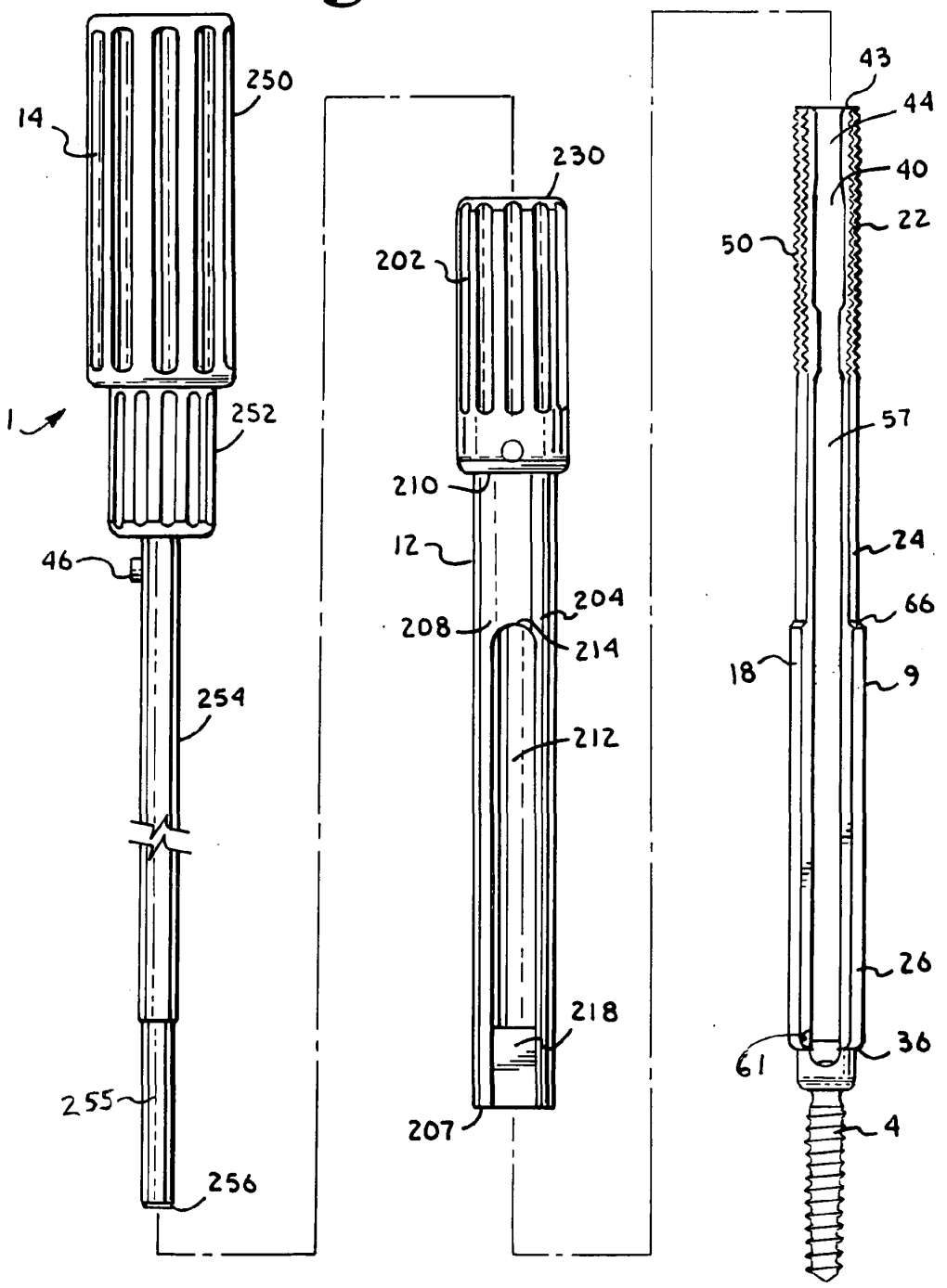
250
14
252
1
46
254
255
256
230
202
210
12
204
208
214
212
218
207
43
44
40
22
50
57
24
66
18
9
26
36
61
4

Fig. 2.

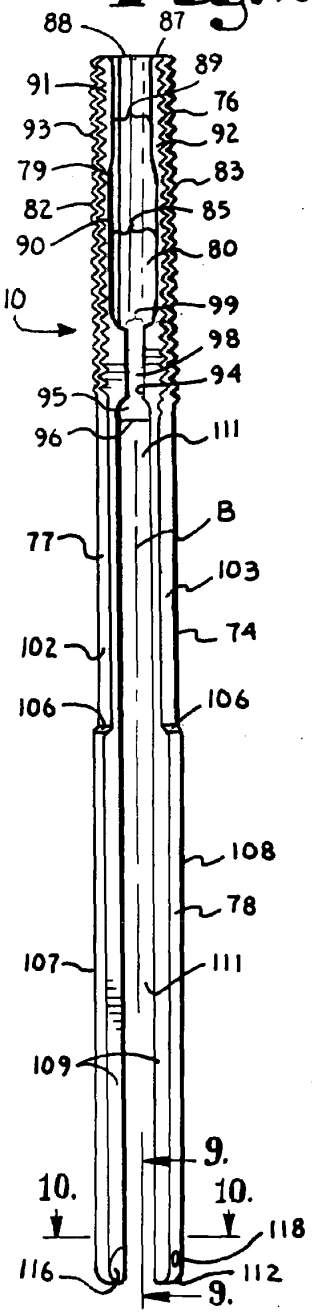

Fig. 3.

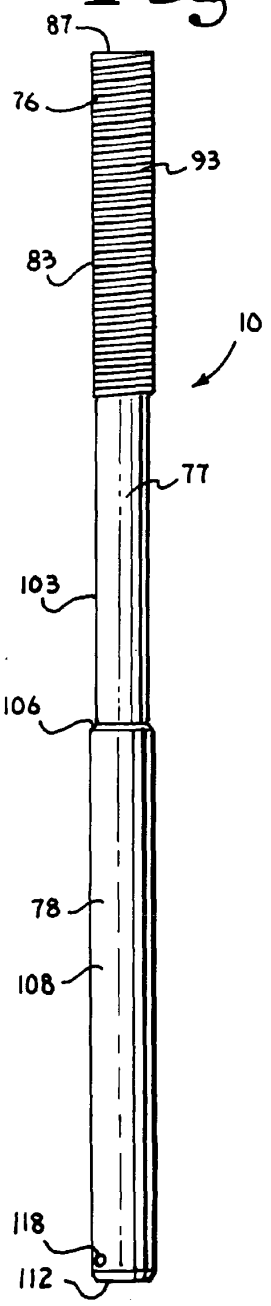

Fig. 4.

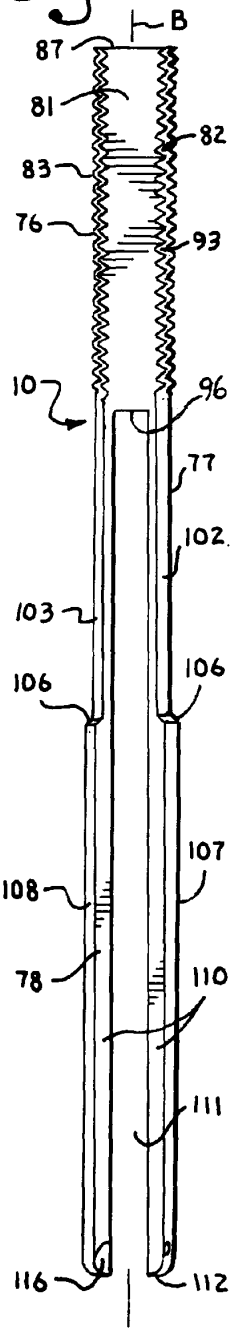

Fig.5.

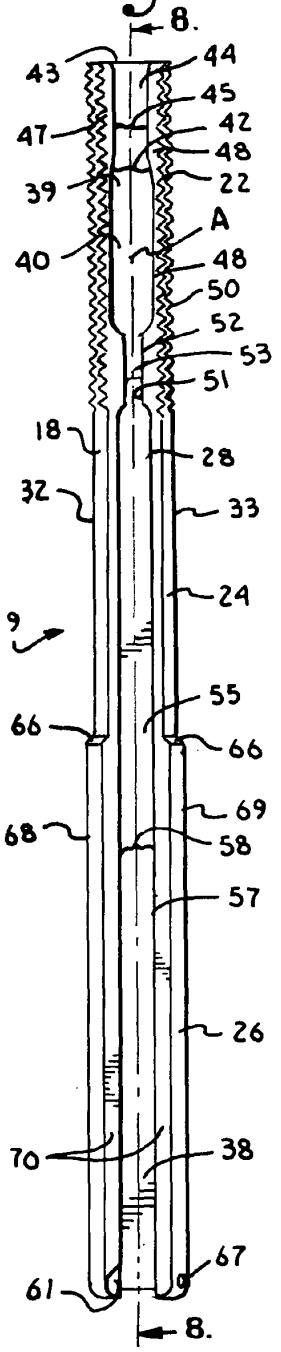

Fig.6.

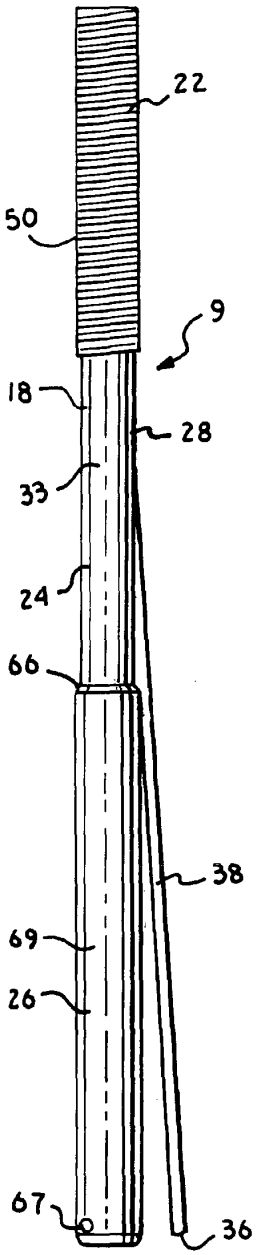

Fig.7.

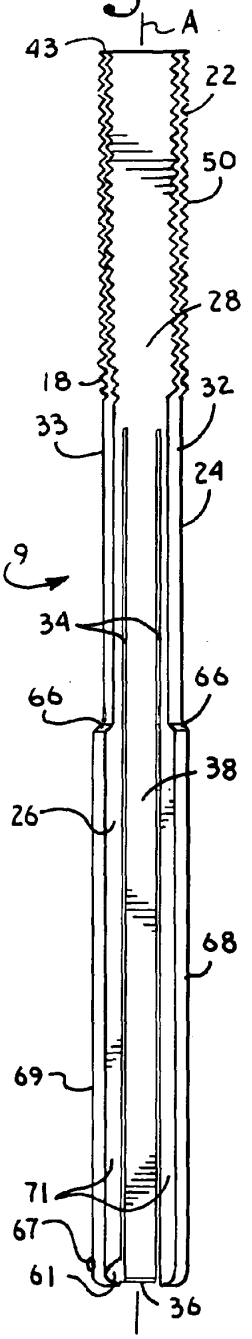

Fig. 8.

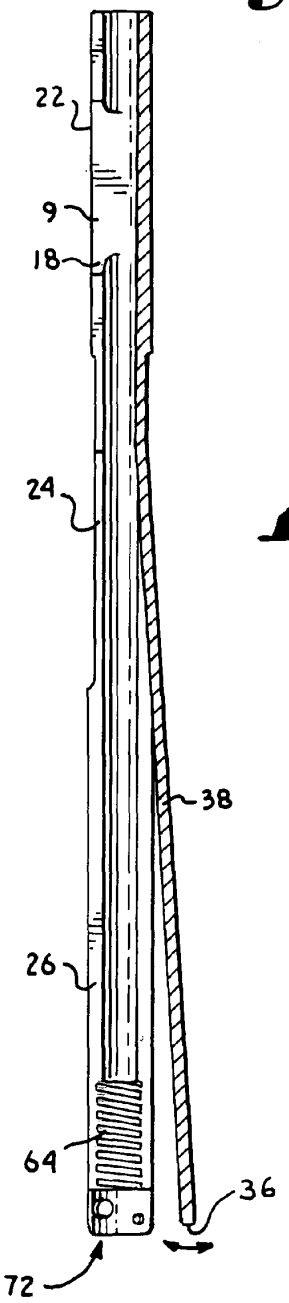

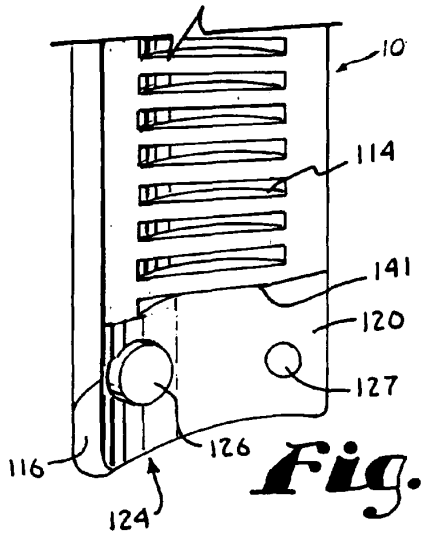

Fig. 9.

Fig. 10.

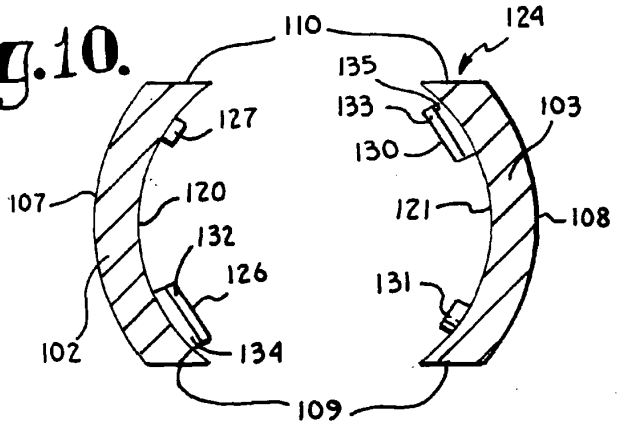

Fig. 11.

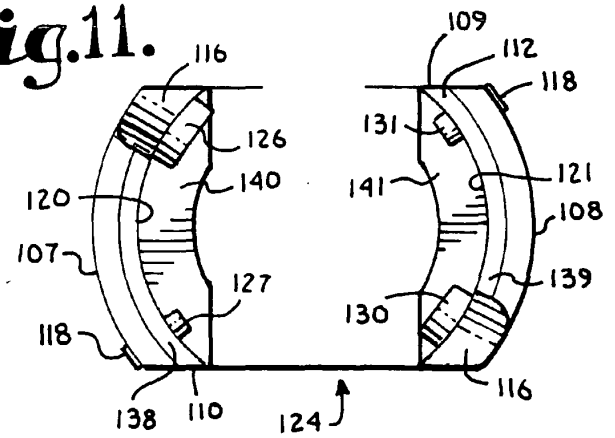

Fig.12.

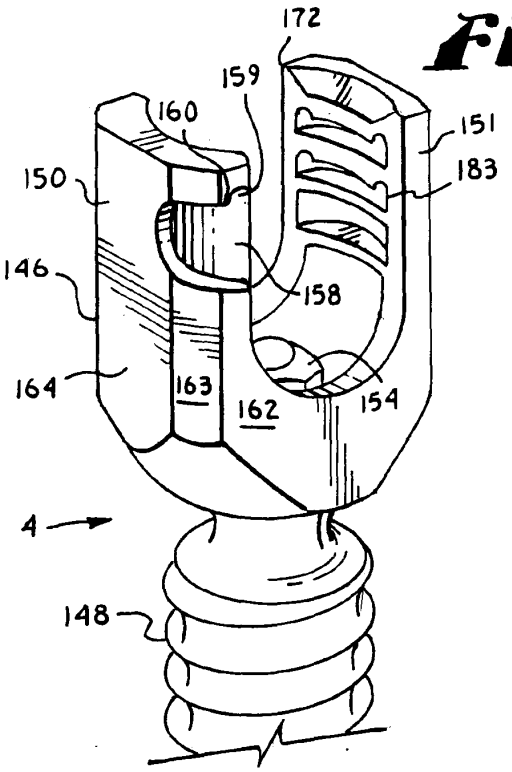

Fig.13.

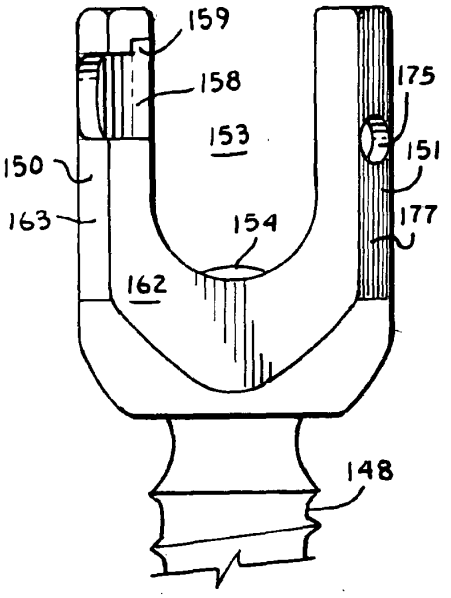

Fig.14.

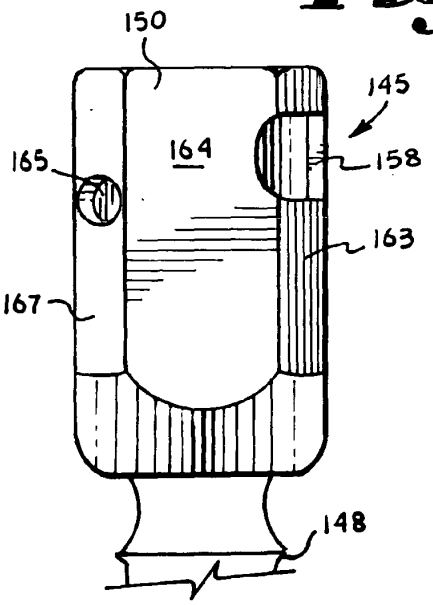

Fig.15.

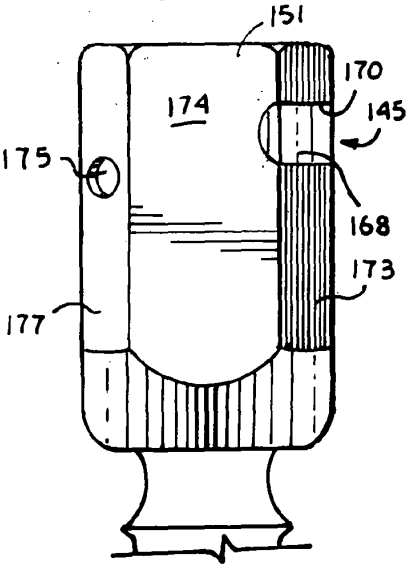

Fig. 16.

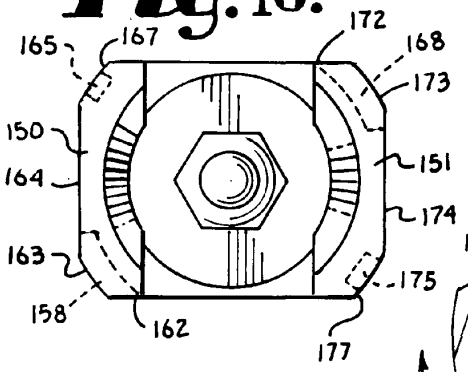

Fig. 18.

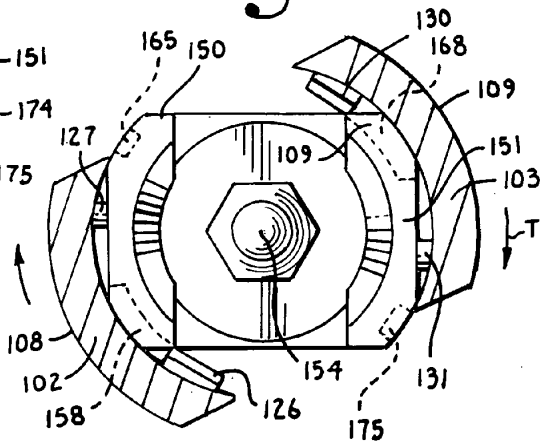

Fig. 17.

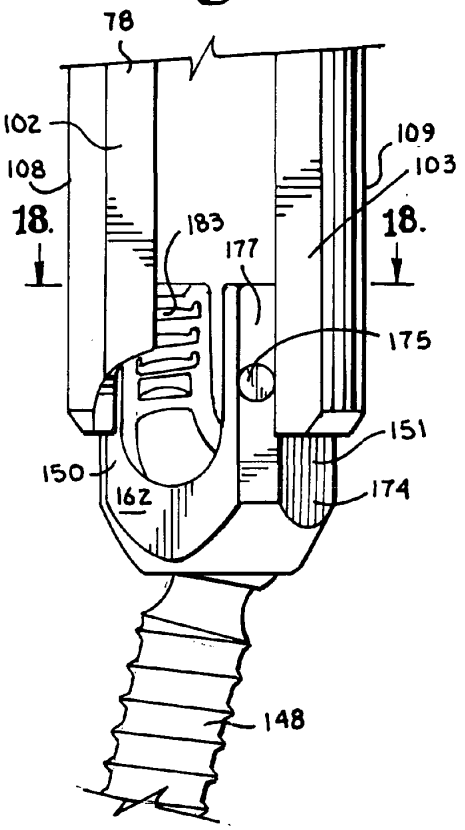

Fig. 19.

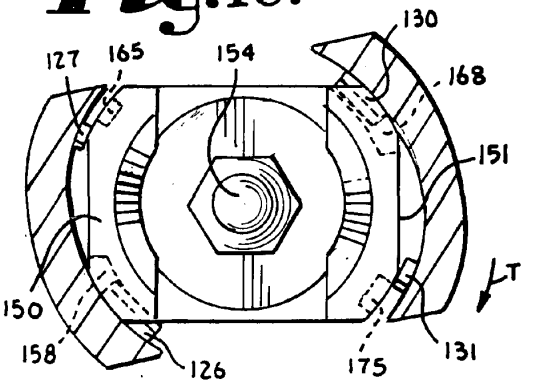

Fig.20.

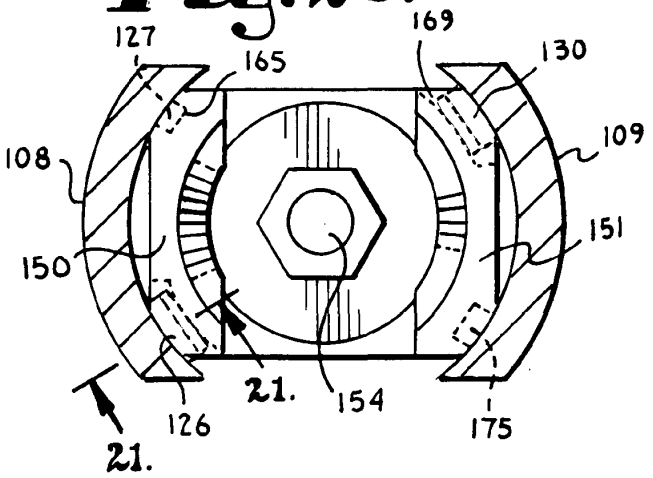

Fig.35.

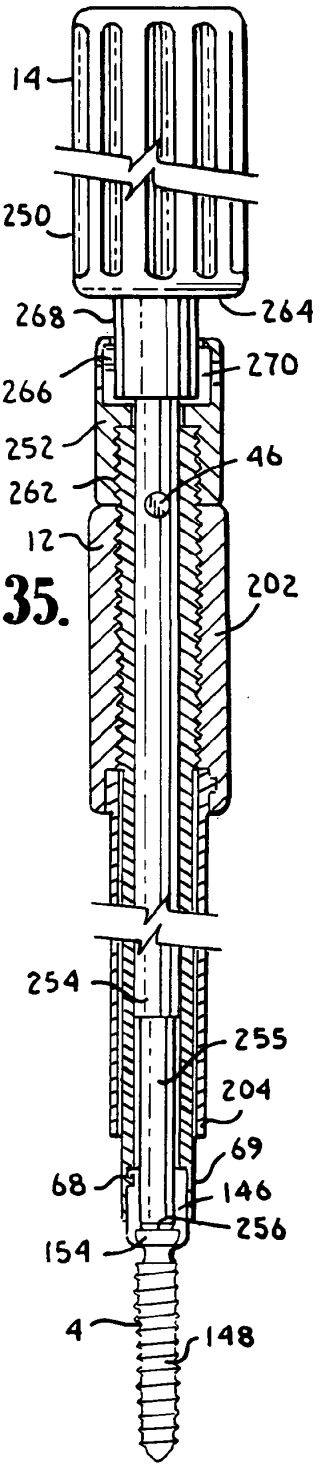

Fig.21.

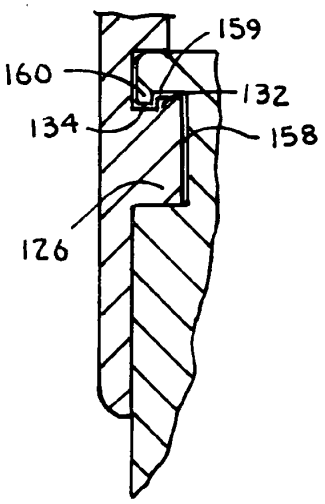

Fig.22.

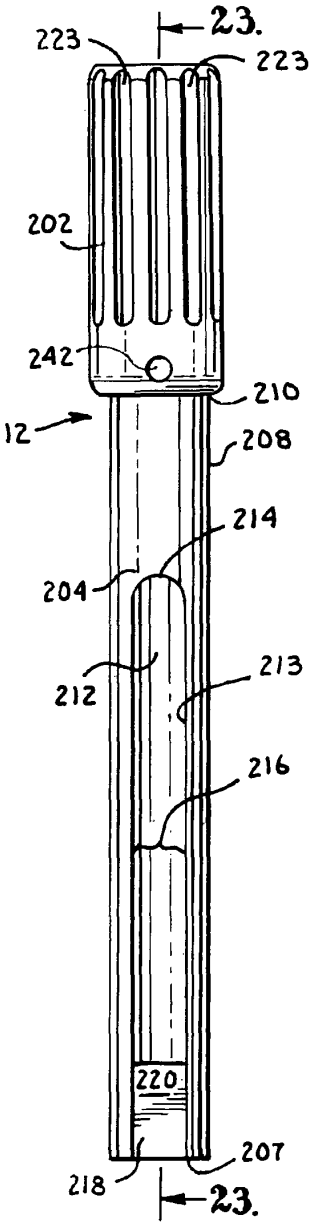

Fig.23.

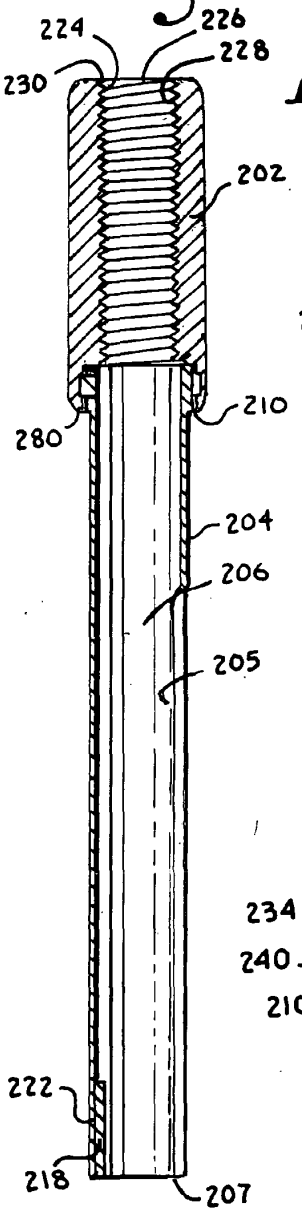

Fig.24.

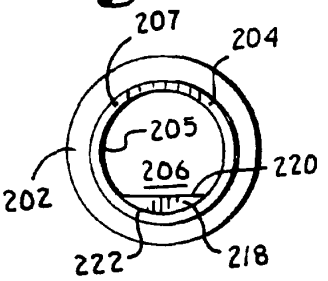

Fig.25.

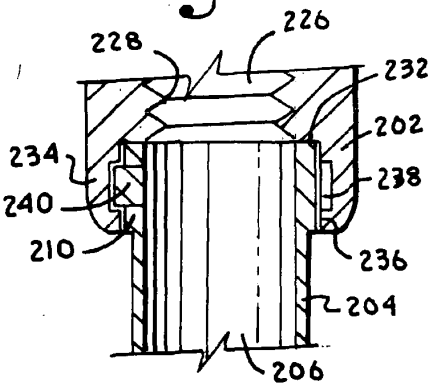

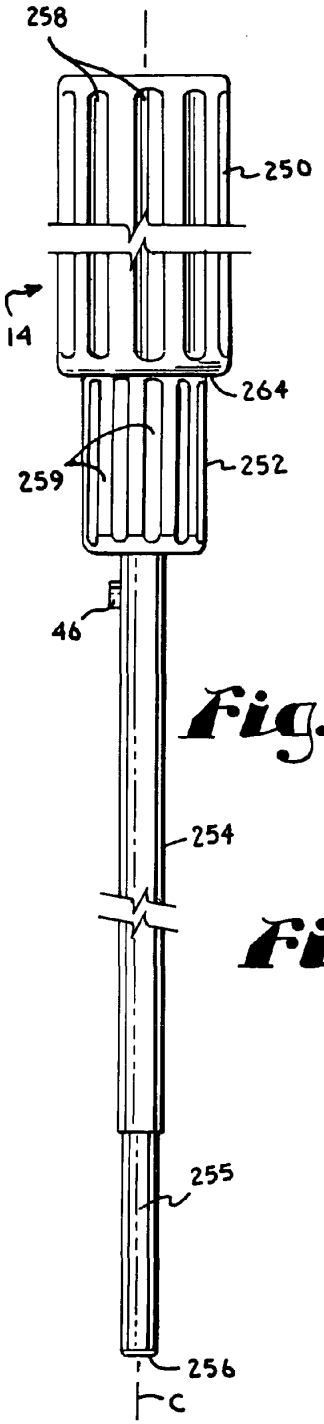

Fig.26.

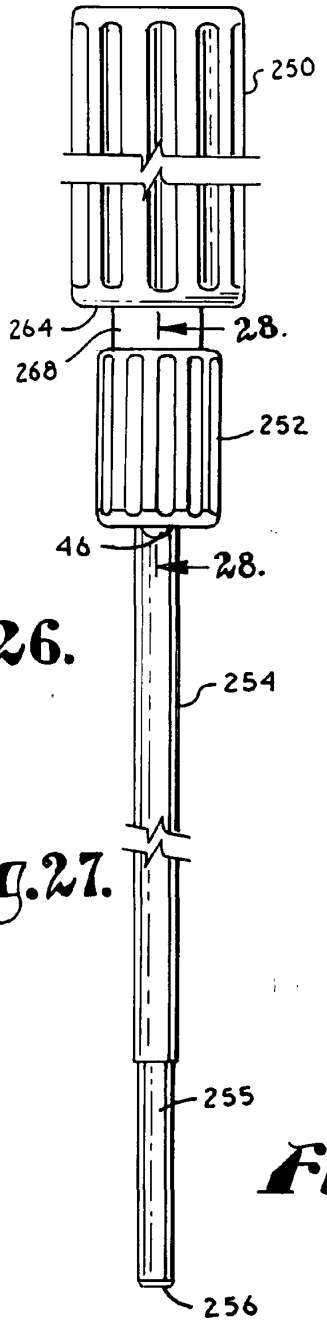

Fig.27.

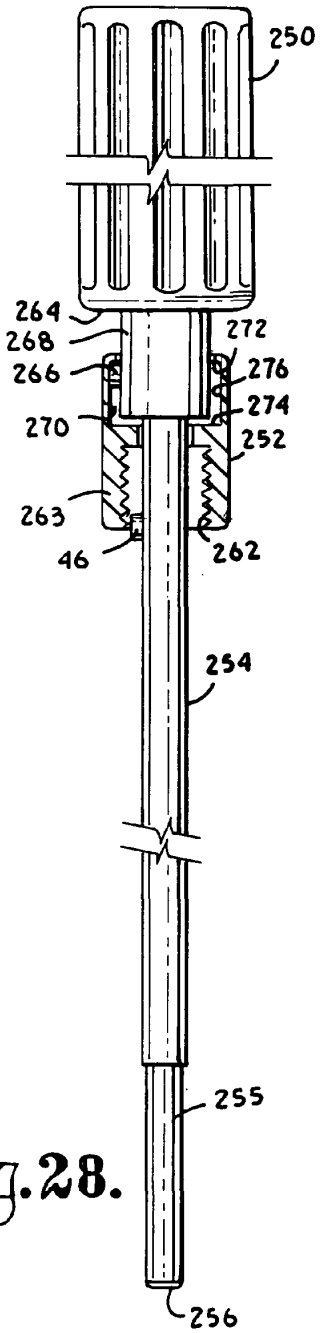

Fig.28.

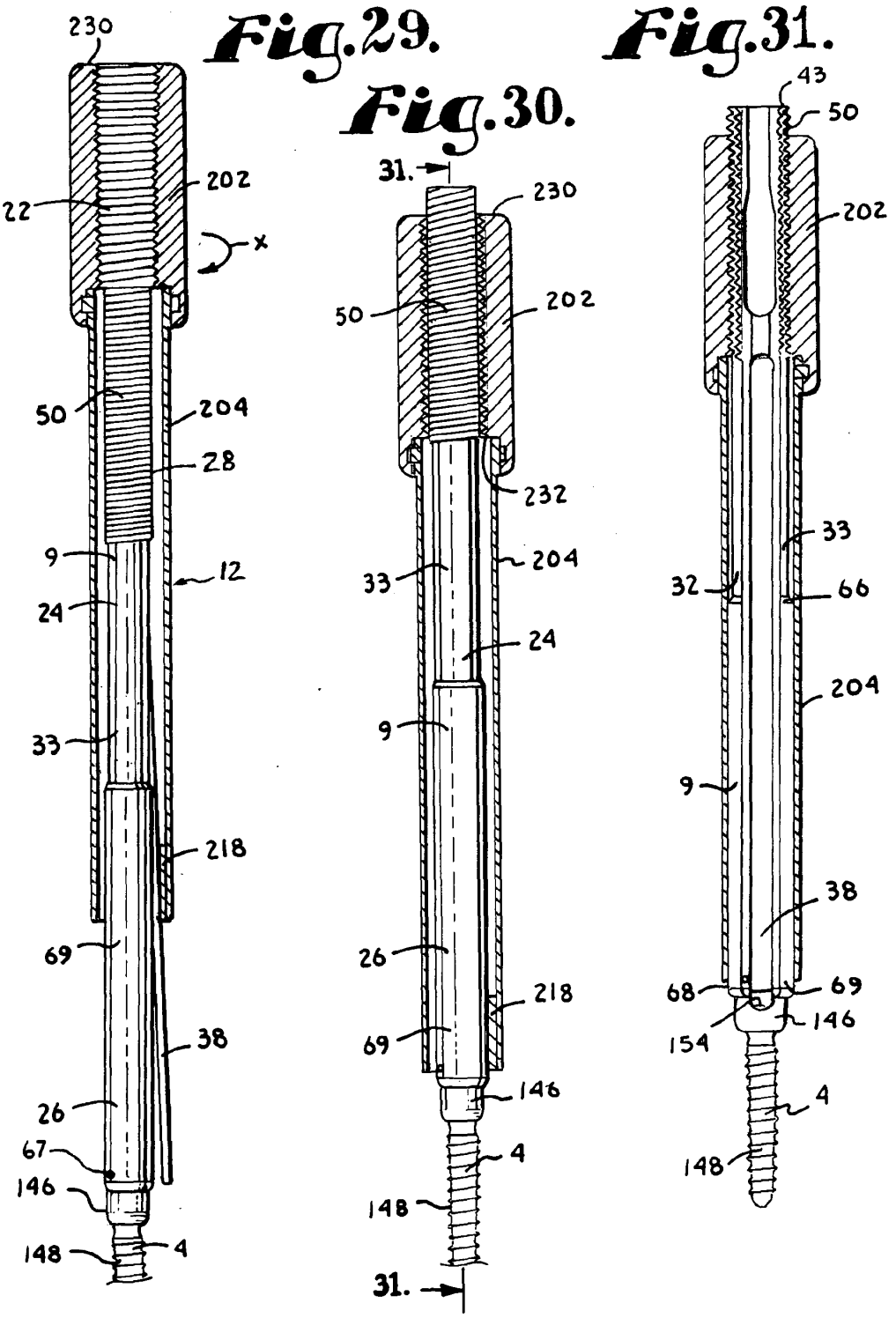
Fig.29.
Fig.30.
Fig.31.
230
22
202
x
50
204
28
9
12
24
33
218
69
38
26
67
146
148
4
31.
230
50
202
232
204
33
24
9
26
218
69
146
4
148
31.
43
50
202
33
32
66
204
9
38
68
69
154
146
4
148

Fig.32.

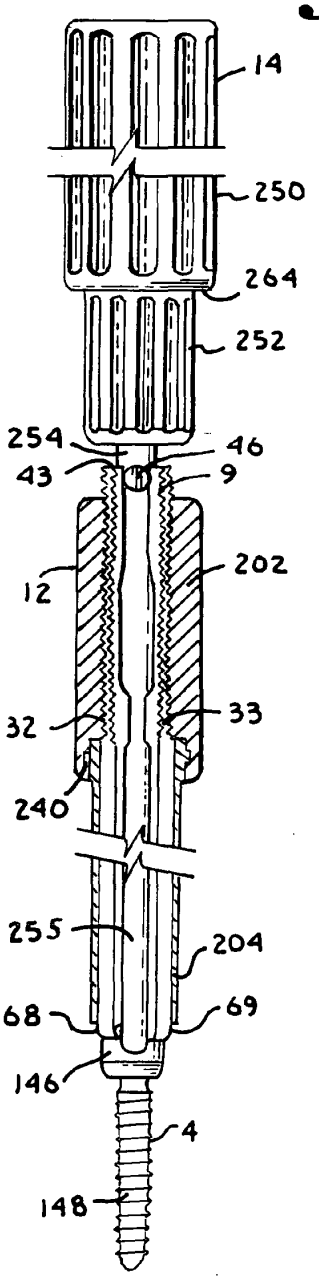

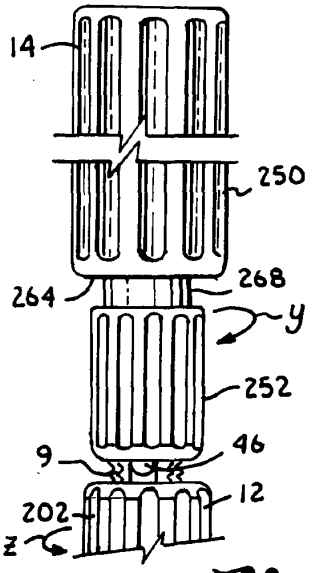

Fig.33.

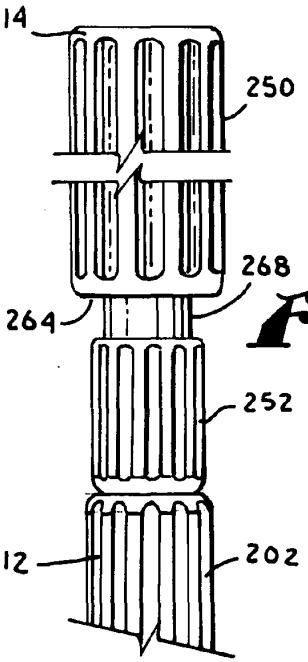

Fig.34.

Fig.36.

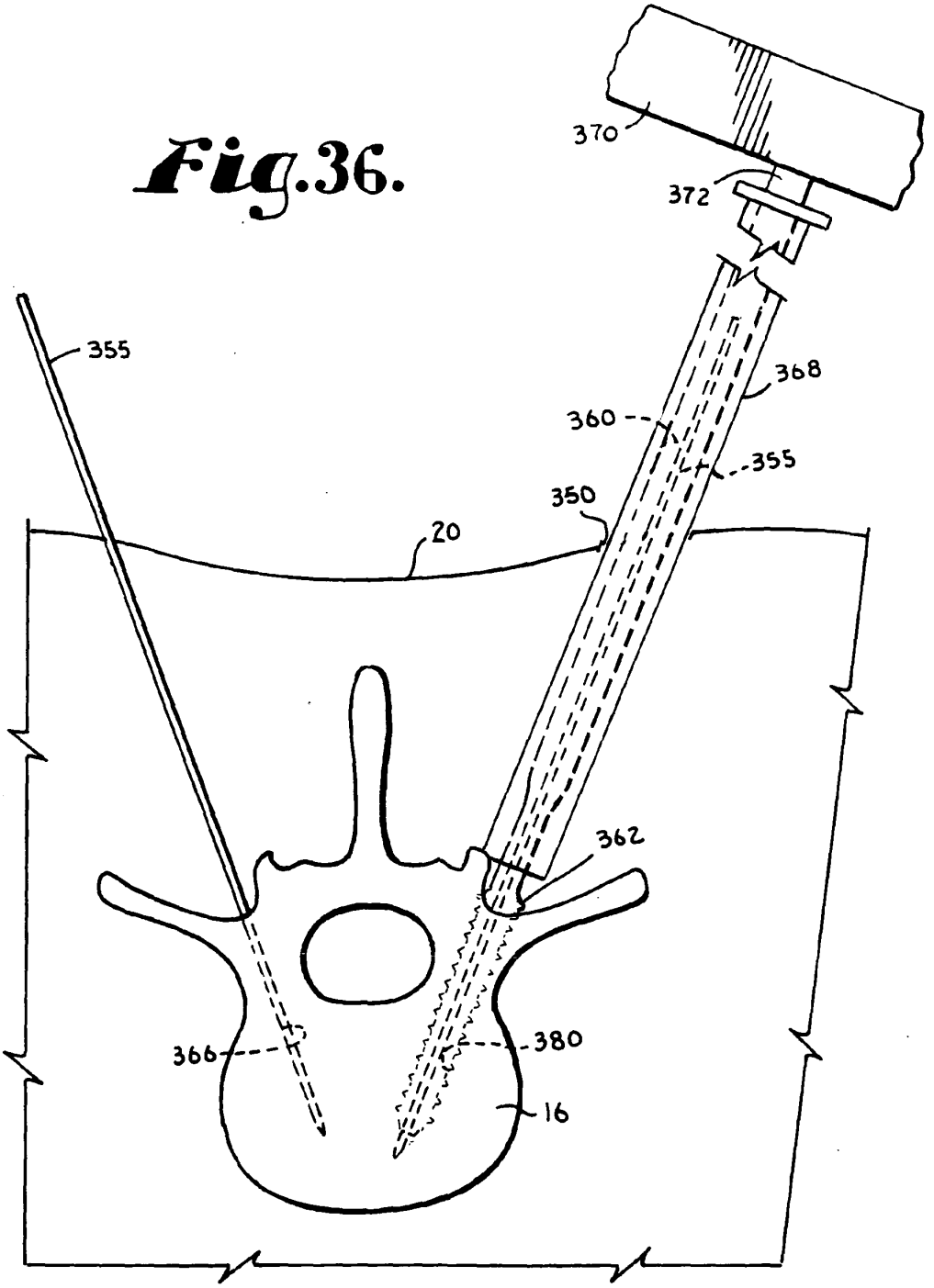

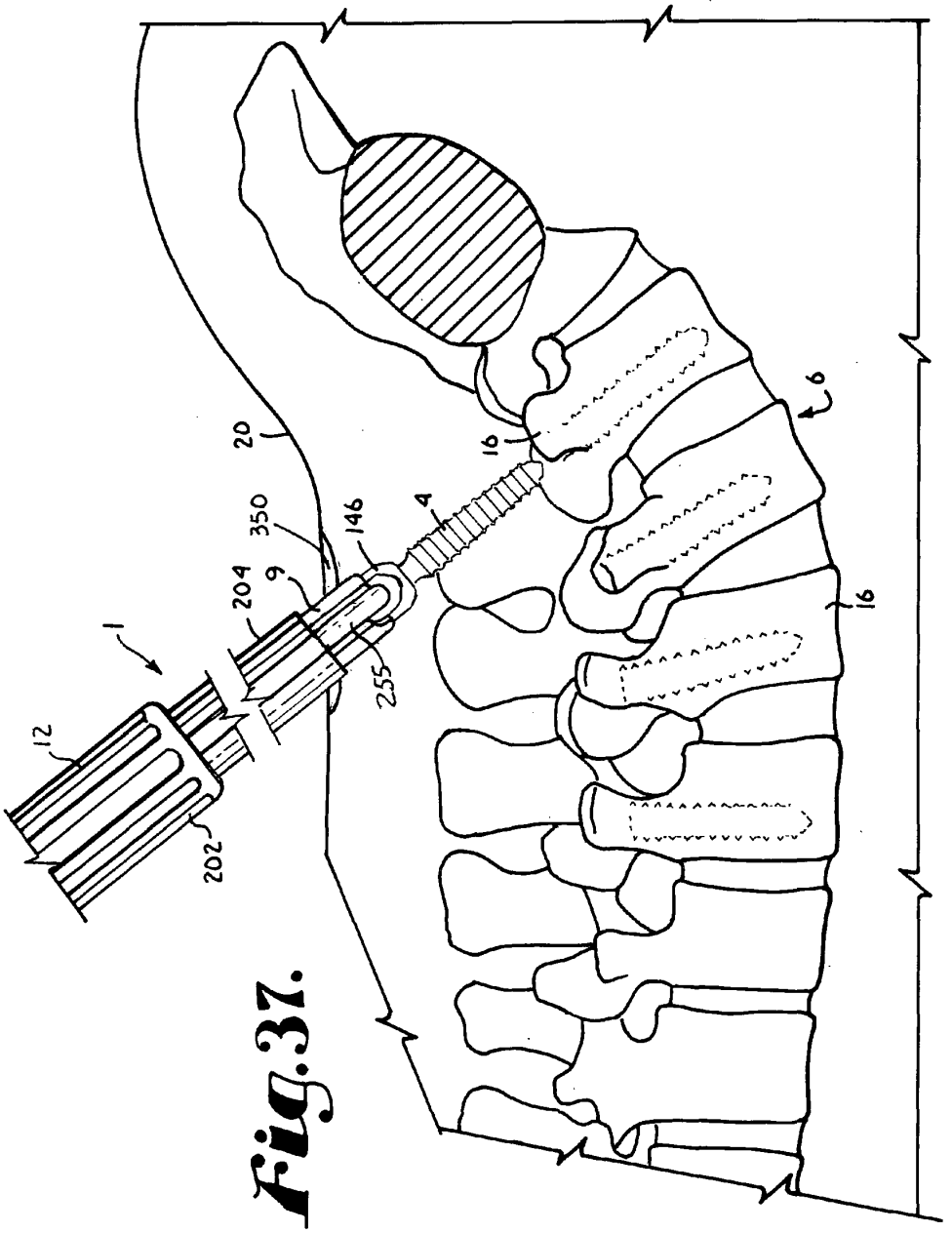

Fig.37.

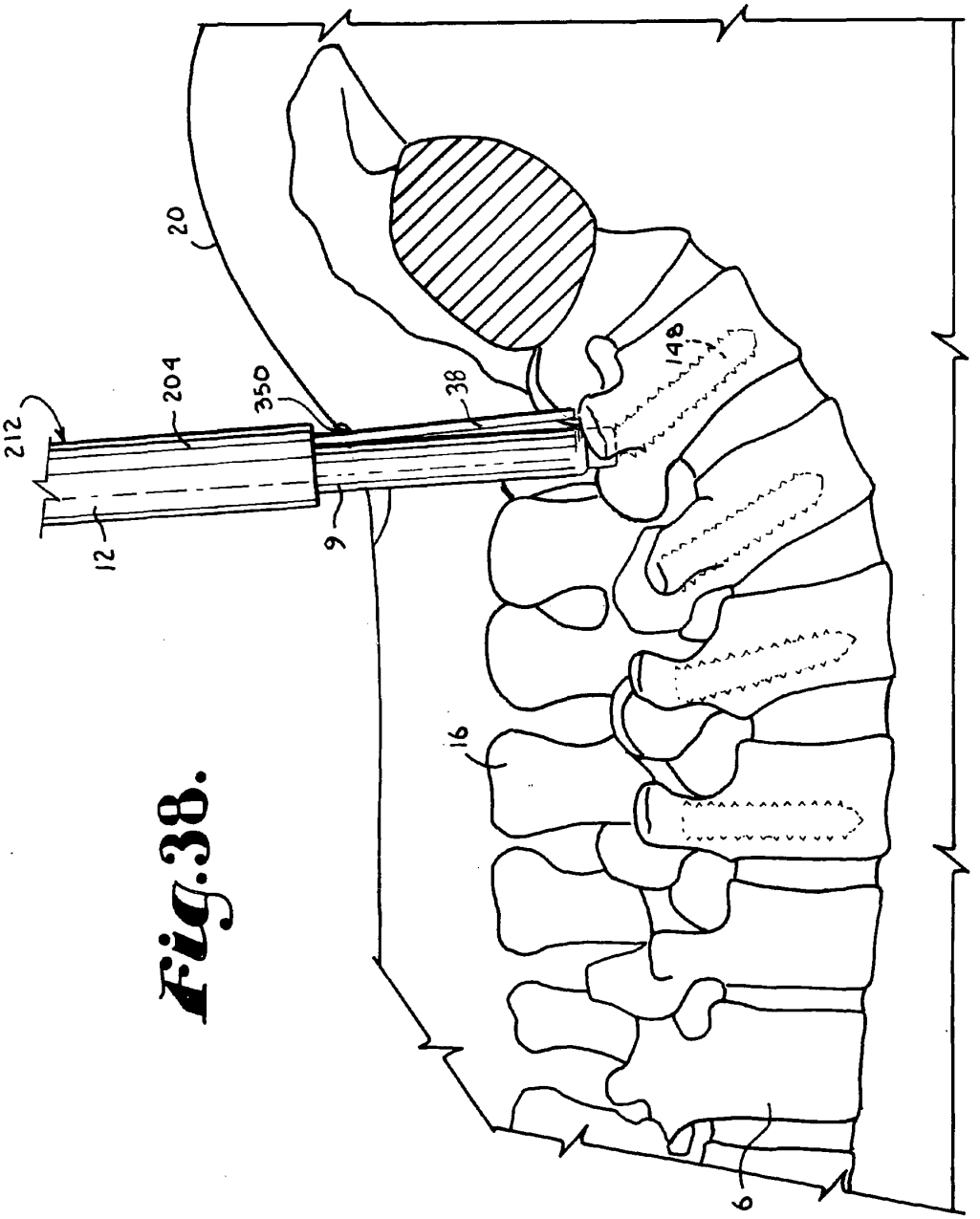

Fig.38.

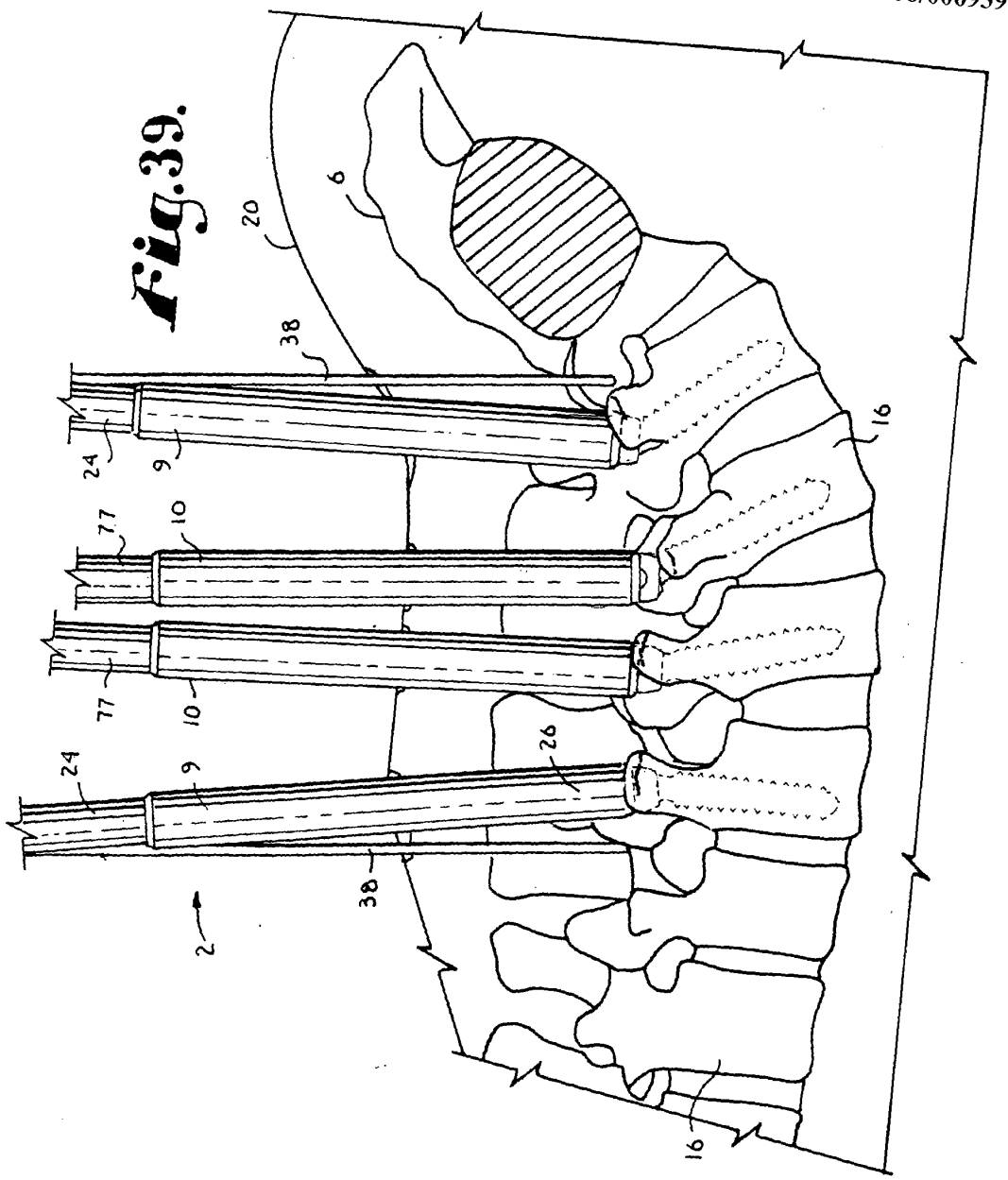

Fig.39.

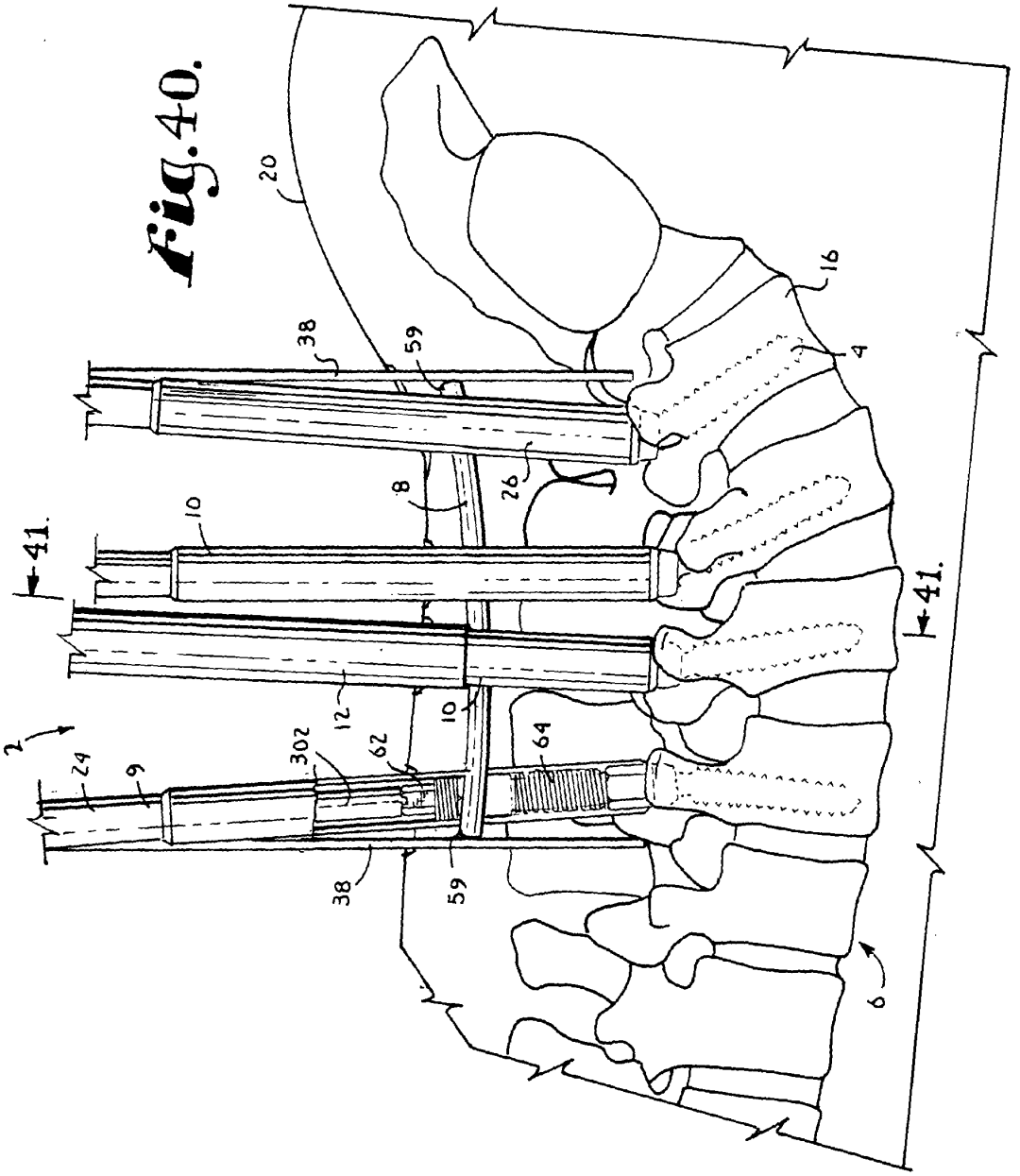

Fig. 40.

Fig.41.

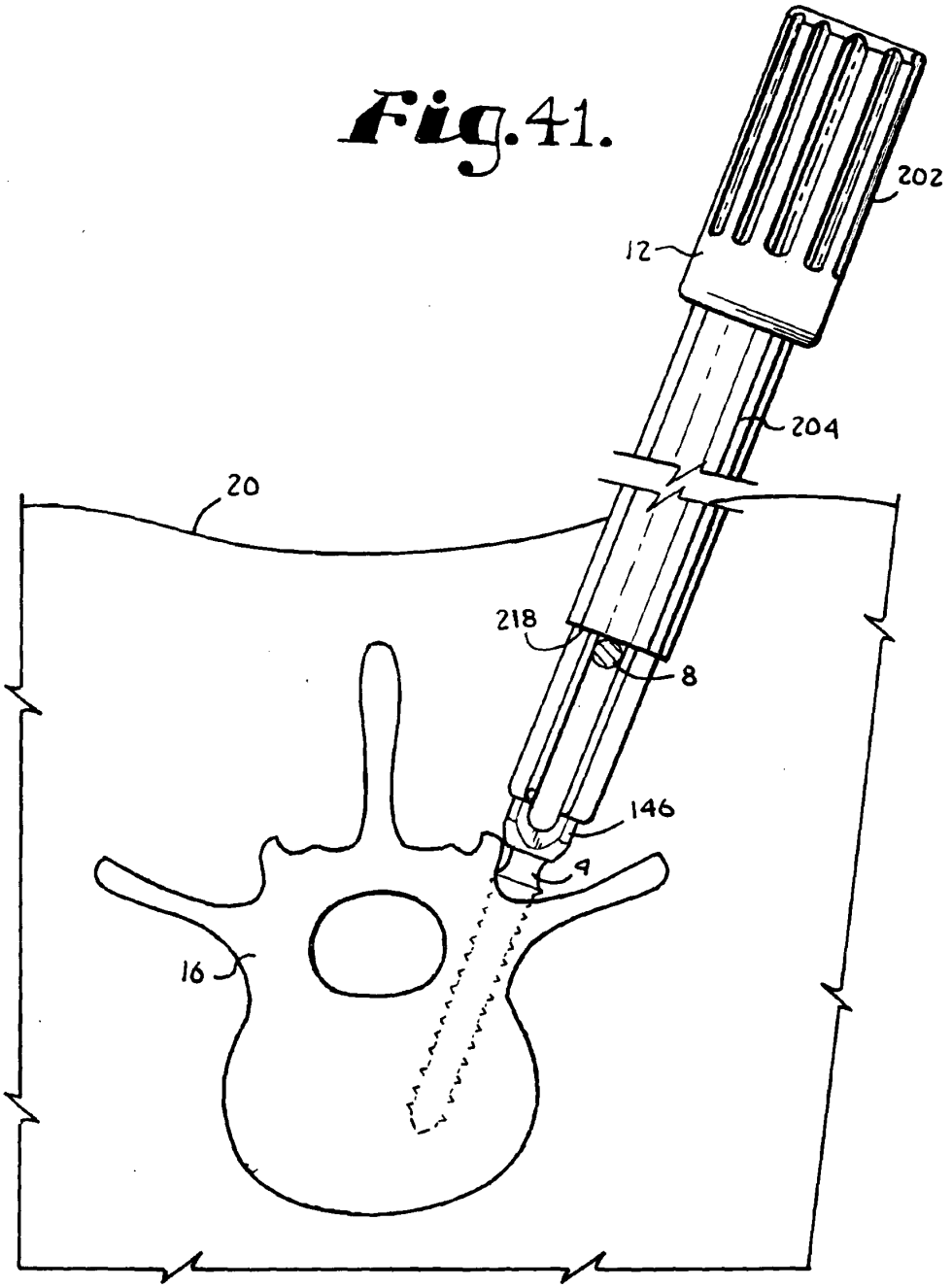

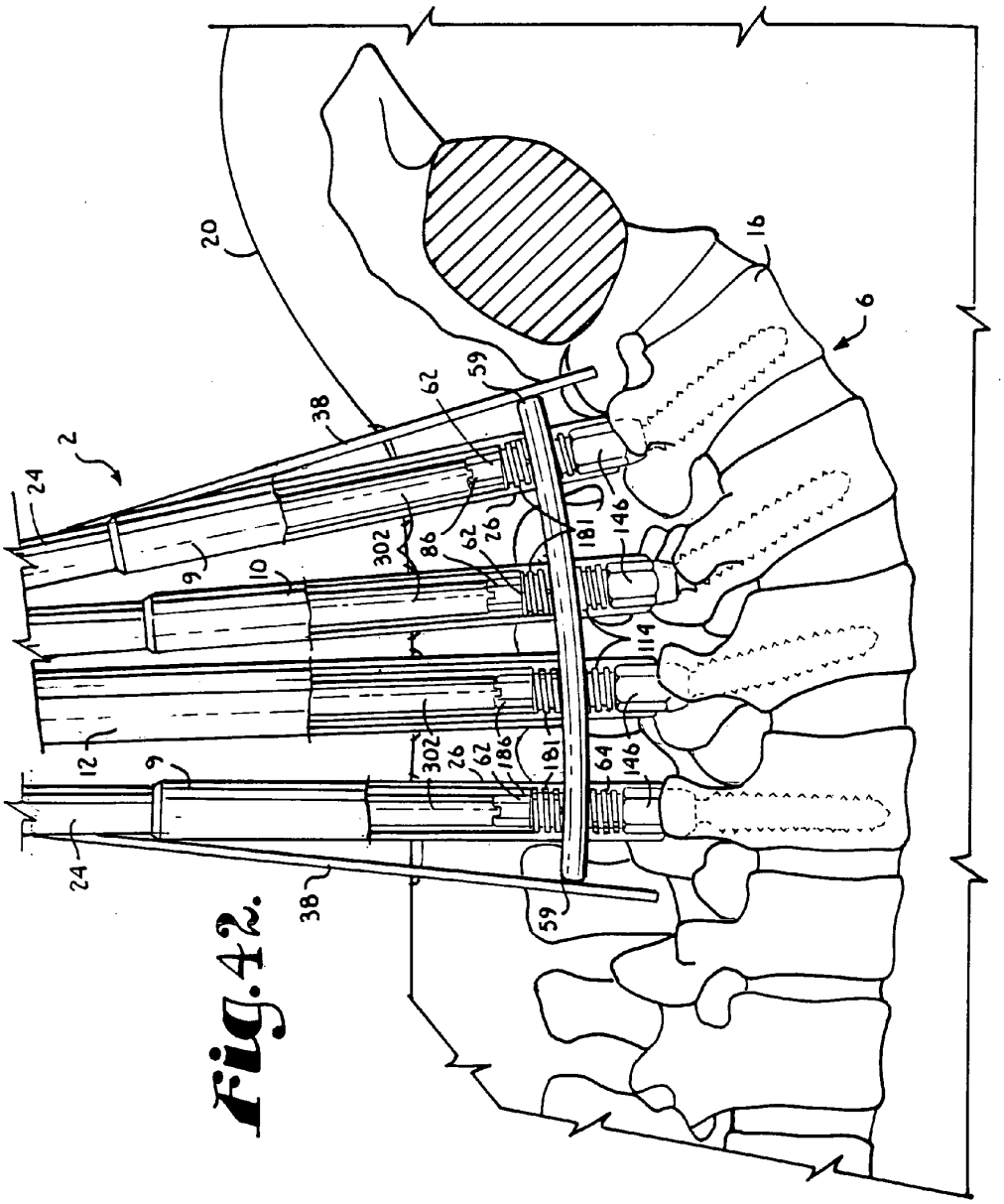

Fig. 42.

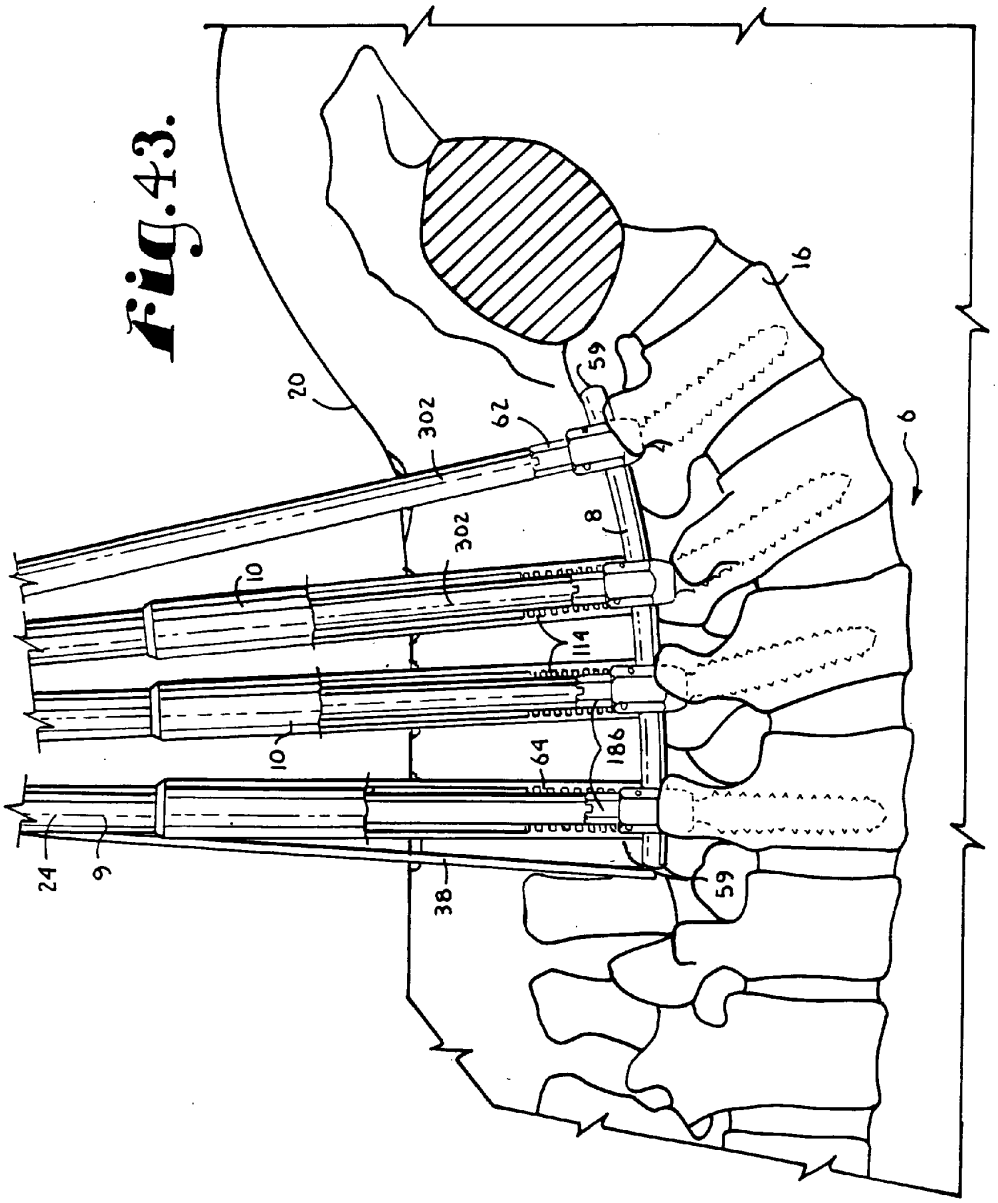

Fig.43.

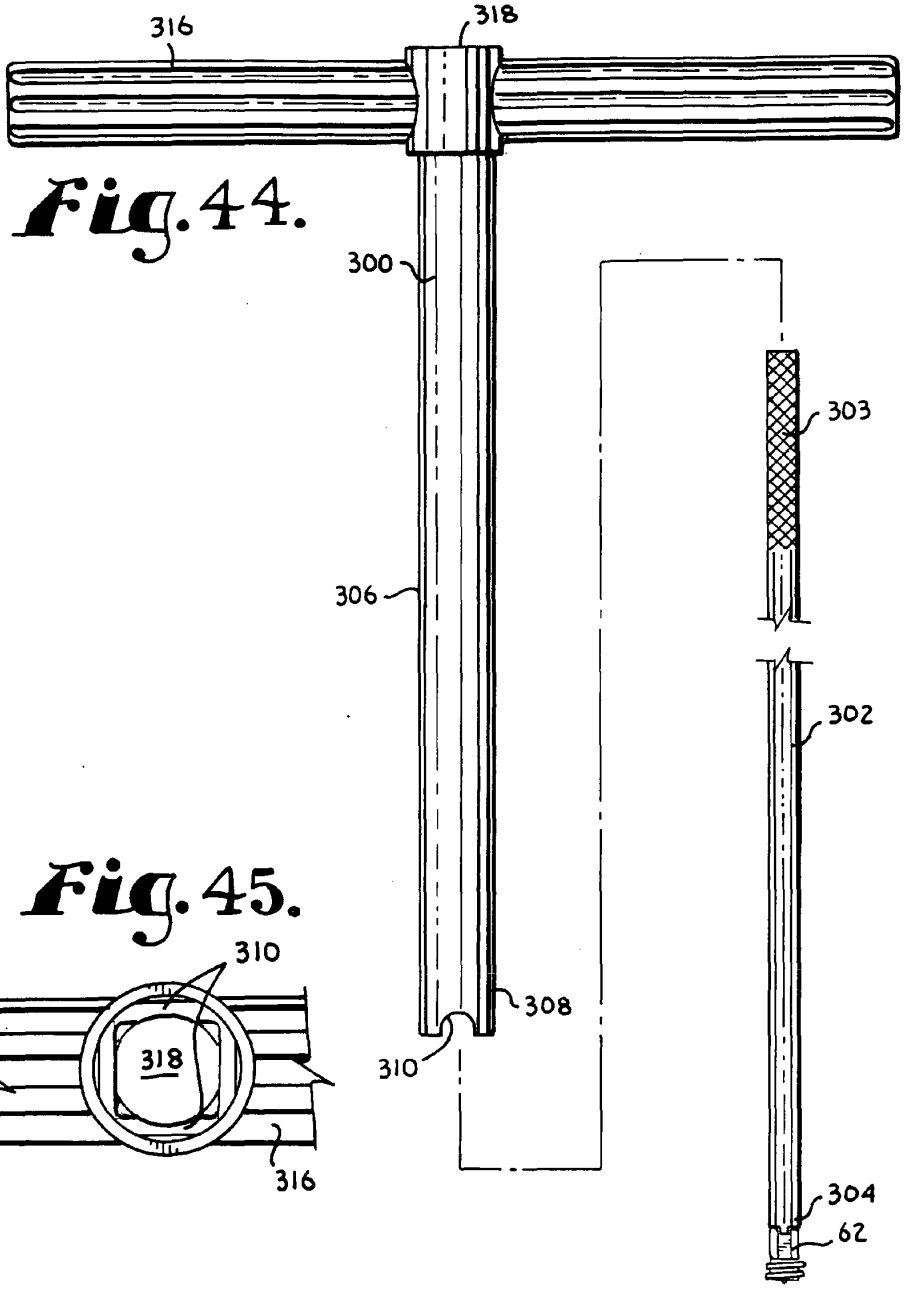

Fig. 44.

Fig. 45.

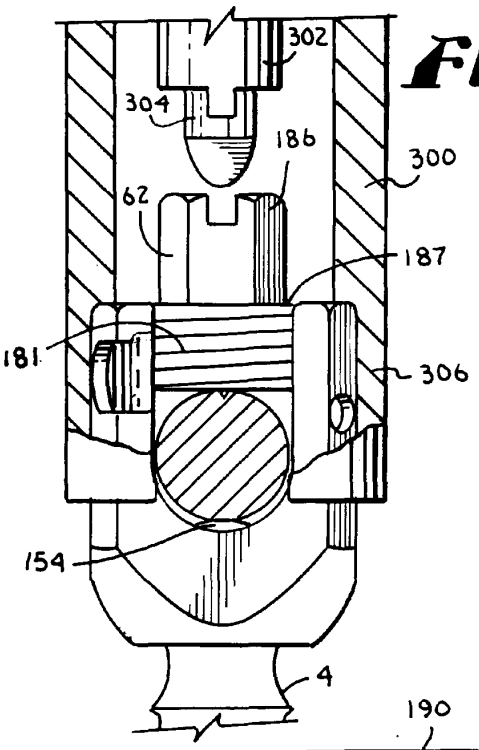

Fig.46.

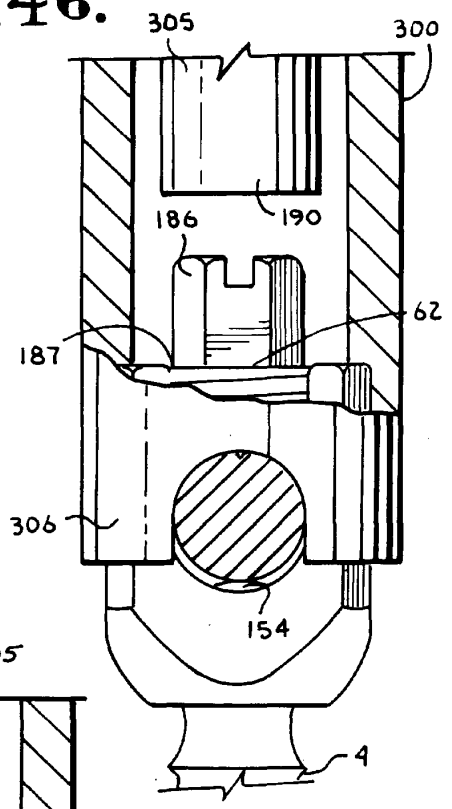

Fig.47.

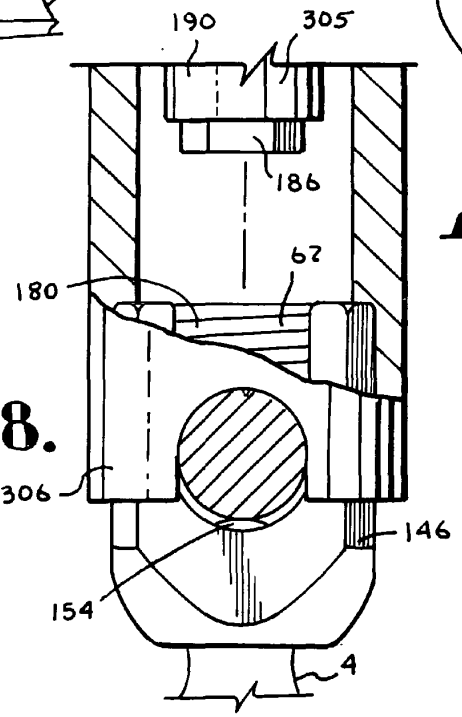

Fig.48.

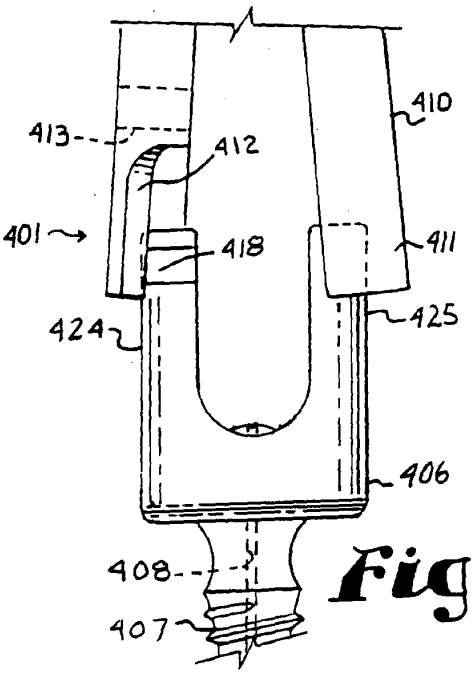

Fig. 49.

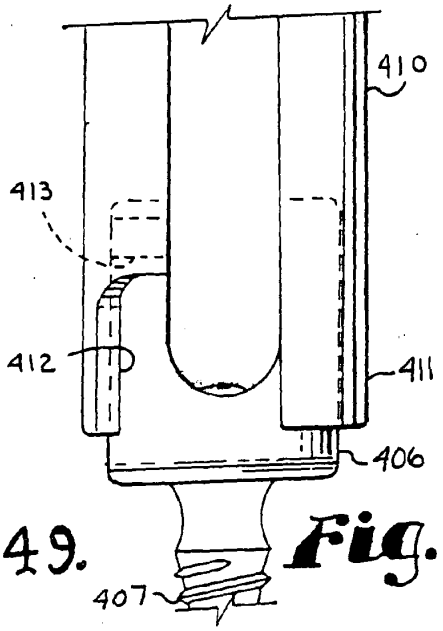

Fig. 50.

Fig. 51.

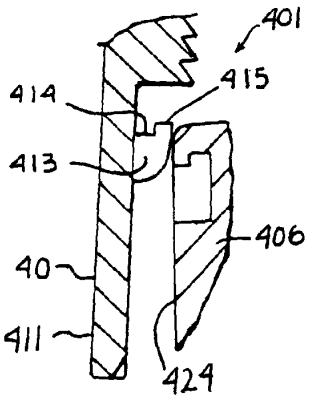

Fig. 52.

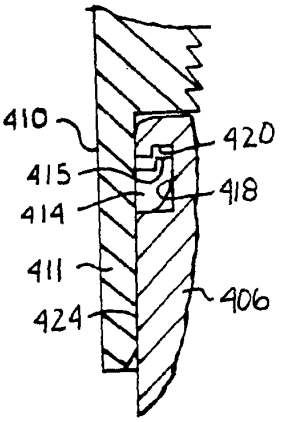

Fig. 53.

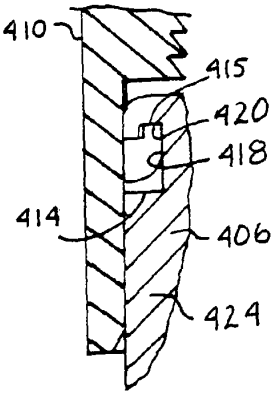

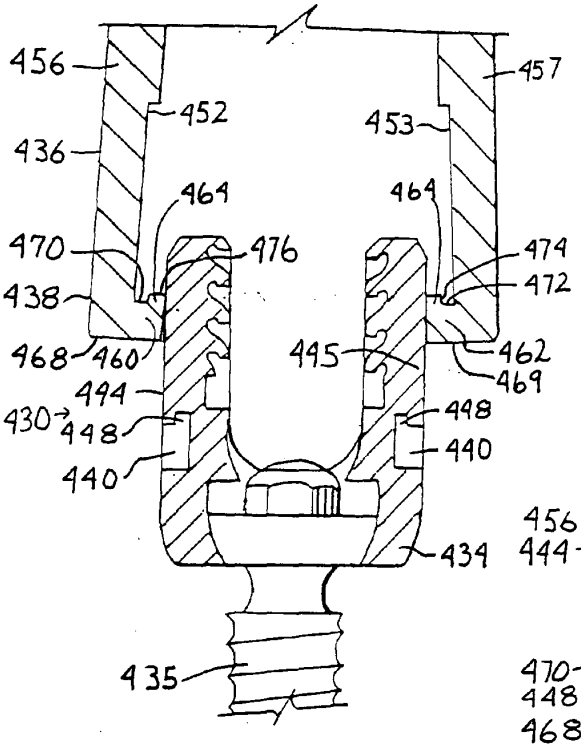

Fig. 54.

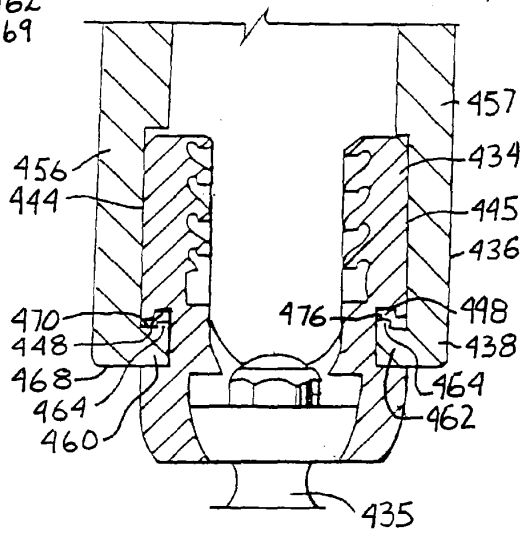

Fig. 55.

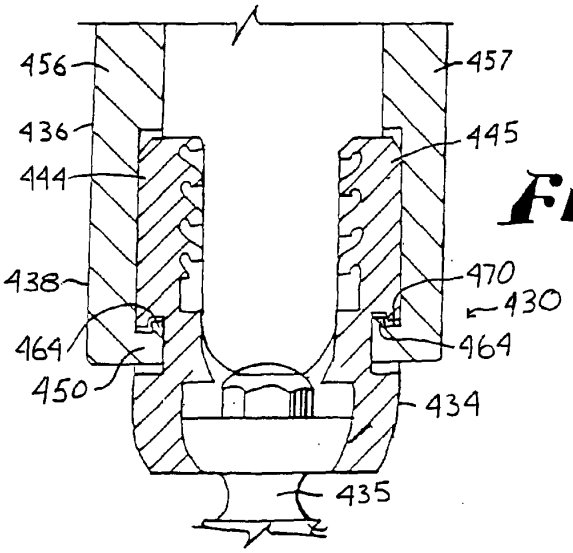

Fig. 56.

Fig. 57.

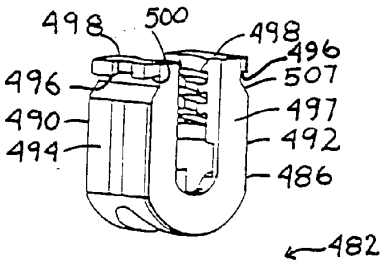

Fig. 58.

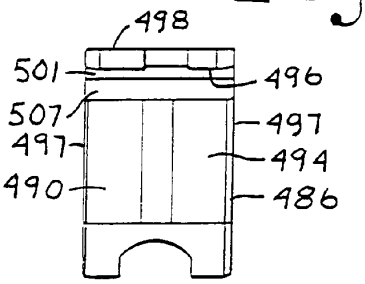

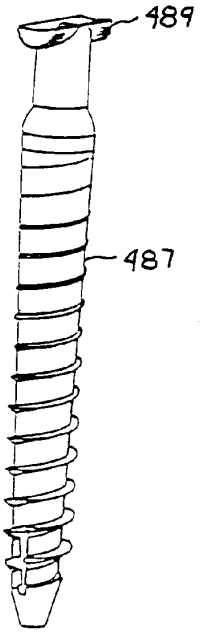

Fig. 59.

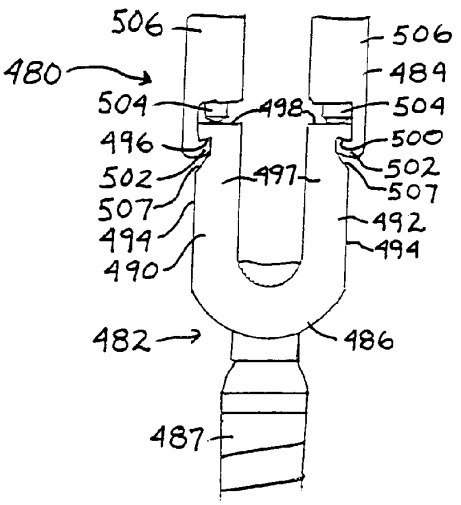

SPINAL FIXATION TOOL ATTACHMENT STRUCTURE

CROSS-REFERENCE TO RELATED APPLICATIONS

[0001] This application claims the benefit of U.S. Provisional Application No. 60/630,536 filed Nov. 23, 2004; and is a continuation-in-part of U.S. patent application Ser. No. 10/996,289 filed Nov. 23, 2004; and also is a continuation-in-part of U.S. patent application Ser. No. 10/789,149, filed Feb. 27, 2004, all of which are incorporated herein by reference.

BACKGROUND OF THE INVENTION

[0002] The present invention relates to apparatuses and methods for use in performing spinal surgery and, in particular, to tools and methods of using such tools, especially for percutaneously implanting spinal screws and for implanting a rod for spinal support and alignment, using minimally invasive techniques.

[0003] For many years, spinal osteosynthesis apparatuses have been utilized to correct spinal deformities, injuries or disease. In such procedures, elongate rods are surgically attached to vertebrae of the spine to provide support and/or to realign or reposition certain vertebrae. Such rods are secured to vertebrae utilizing bone screws and other spinal implants. In order to reduce the impact of such surgery on the patient, a desirable approach is to insert such implants percutaneously or with surgical techniques that are minimally invasive to the body of the patient.

[0004] Problems arise when implantation tools designed for traditional surgery that is highly invasive are utilized in percutaneous surgery. The tools may be bulky, oversized or have irregular surfaces or protrusions. A projecting actuator arm or fastening member may be useful with respect to the spinal screw implantation process or the rod reduction process, but there is insufficient clearance to use such structure and/or such structure may produce additional invasive trauma which the percutaneous surgery is attempting to avoid.

[0005] A percutaneous procedure also presents a problem with implantation of rods that are elongate and have historically required a long incision and open wound in order to provide for the length of the rod and the space required for the surgeon's hands to manipulate the rod. Such problems are then compounded by the implants and insertion tools used with the rod.

[0006] Consequently, it is desirable to develop apparatuses and techniques that allow for the insertion of bone screws, the insertion and reduction of a rod into the bone screws and the securing of the rod to the bone screws with significantly less invasion into the body of the patient and with minimal surgical incision of the skin over the operational site.

SUMMARY OF THE INVENTION

[0007] A tool assembly and a set of tools according to the invention is provided for percutaneously implanting bone screws and an associated spinal rod in a patient. The tool assembly includes an elongate guide tool with implant engaging members and a multi-purpose installation tool. The multi-purpose tool is a stabilizer for the guide tool implant engaging members which also functions as a rod stabilizer tang container and deployer and a rod pusher and reducer. The guide tool has a lower end configured with opposed implant engaging members for releaseable attachment to a spinal implant bone screw, hook, etc. The multi-purpose installation tool is elongate, and preferably includes a translation nut and attached sleeve which has a lower end for engaging and containing the rod stabilizer tang prior to rod insertion and later pushing on the rod for reduction. The translation nut is coaxial and freely rotatable with respect to the sleeve. The nut is configured for rotatable attachment to an upper end of the guide tool. The multi-purpose installation tool sleeve is attachable or securable to the guide tool in a first bone screw implantation orientation and in an alternative second rod pushing orientation. In the first, bone screw implantation orientation, the sleeve is disposed in a fixed, stationary position with respect to the guide tool, with the sleeve substantially surrounding the guide tool and retaining a flexible tang. In the second or rod pushing orientation, the sleeve is slidable along an axis of the guide tool and the nut can be rotated, thereby translating the rod pushing end between a first location substantially spaced from the guide tool end and a second location near the guide tool end for rod reduction.

[0008] The tool assembly may further include a driver having a handle, a guide tool attachment portion and a stem, the stem having an end configured for rotatable engagement with a spinal implant screw. The driver is in coaxial relationship with both the guide tool and the multi-purpose installation tool when the stem is disposed within the guide tool with the guide tool attached to the multi-purpose installation tool. The attachment portion of the driver is configured for rigid attachment to the guide tool, preventing rotation of the driver in relation to the guide tool.

[0009] A tool set according to the invention includes at least a pair of end guide tools. Each end guide tool includes an elongate body having opposed implant engaging members with lower attachment structure adapted for attachment to a respective bone screw. The body has an inner surface defining an elongate and laterally opening channel. Preferably, the guide tool body further defines an elongate opening communicating with the channel and a back wall with a flexible holding structure, the wall and holding structure disposed opposite the lateral opening. The back wall flexible holding structure includes first and second elongate and parallel slits in the lower back wall portion creating a movable tab or tang disposed between the first and second slits. The flexible flap or tang partially defines the elongate channel. Furthermore, during insertion procedures, the tang may be pushed so as to flex, hinge or spring at an upper end thereof and so that a lower end angulates and translates outwardly or to a location lateral relative to a remainder of the back wall, with the channel adapted to receive a respective rod therein. When an end of the rod is inserted in the lower end channel, the tang may be resiliently flexed further outwardly to accommodate the length of the rod while maintaining, containing and stabilizing the rod in a desired position relative to bone screws.

[0010] The multi-purpose installation tool is attachable to the end guide tool in a first, bone screw implantation configuration position and in an opposite second, rod pushing configuration or position. In the first position, an elongate slot or opening in the sleeve of the tool support is

aligned with and fixed in adjacent relationship to the channel opening of the end guide tool, with the sleeve of the tool being held adjacent to the back wall portion and retaining the spring tang. In the second, rod pushing position, the end guide tool back wall portion and the tool sleeve opening are fixed in adjacent relationship with the back wall tang portion protrudeable into the tool sleeve opening.

[0011] An intermediate guide tool according to the invention includes an end with opposed first and second implant engaging legs defining a longitudinal pass-through opening, passageway or slot for receiving a rod therethrough. When attached to a multi-purpose installation tool in the first, bone screw implantation orientation, the tool sleeve is disposed in a fixed, stationary position substantially surrounding and supporting both the intermediate guide tool legs. In the second or rod pushing orientation, the sleeve is in sliding relation along an axis of the intermediate guide tool, with the sleeve and associated rod pushing end translatable along the first and second legs between a first location spaced from the intermediate guide tool end and a second location adjacent or near the guide tool end.

[0012] A vertebral support rod implantation kit according to the invention, adapted for use with a plurality of vertebrae, includes a plurality of polyaxial bone screws, each bone screw being adapted for implantation in one vertebra, each of the bone screws having an attachment structure. It is foreseen that the polyaxial bone screws can be cannulated and/or fixed. The kit also includes an elongate rod having first and second ends, the rod sized and shaped to extend between a pair of end bone screws of the plurality of bone screws, which can be fixed, polyaxial and cannulated or not cannulated. The kit further includes a plurality of closure tops with each closure top being sized and shaped to mate with a respective bone screw and capture or retain the elongate rod within a cavity or channel defined by the respective arms of the bone screw. Additionally, the kit includes a pair of end guide tools, and may include one or more intermediate guide tools, each guide tool being attachable to multi-purpose installation tools, as described herein and bone screw drivers, the drivers being configured to be rigidly attached to a respective end guide tool or intermediate guide tool.

[0013] In a method according to the invention, a spinal fixation tool assembly is assembled by first attaching a bone screw head of a spinal implant screw to a mating attachment structure disposed at a first end of an elongate guide tool implant engaging member, the guide tool defining a laterally opening channel and having a second attachment structure disposed at a second end thereof. The guide tool and attached spinal implant screw may then be inserted into a multi-purpose installation tool, the tool having a translation nut, or the like, and a sleeve-like structure. The nut or similar part is rotated or manipulated in a first direction to mate the tool support with the second attachment structure on the guide tool and translate the sleeve or similar surrounding structure to a location near the guide tool first end. Then, a driver is inserted into the guide tool channel, the driver having a handle and a spinal implant screw engagement end. In the illustrated embodiment, the driver is attached to the guide tool at the second attachment structure with the driver engagement end engaging the spinal implant screw. It is foreseen that the guide tool could be attached to the screw and the screw inserted with the driver without the need for additional tools.

[0014] A method according to the invention may also include the steps of inserting the attached driver, guide tool and spinal implant screw into an incision, especially a minimally invasive incision sized to snugly or closely receive the assembled tools and bone screw, and into contact with a vertebra, followed by turning the driver handle. By turning the handle, the driver, the associated tools and the spinal implant screw are rotated as one assemblage or unit, driving the spinal implant screw into the vertebra.

[0015] Further method steps according to the invention include detaching the drivers from the attached guide tool and multi-purpose installation tool, if used, and withdrawing the drivers from the incisions, followed by detaching the multi-purpose installation tools, if used, from the end guide tools and thereby deploying the end tangs. If used, it may also be desirable to detach the multi-purpose installation tools from the intermediate guide tools, if any.

[0016] According to one embodiment of the invention, during rod insertion, a respective multi-purpose installation tool may be utilized for rod reduction and accordingly replaced on each end guide tool with the sleeve opening thereof aligned with the end guide tool flexible wall or tang to allow the tang to remain flexed outward. Then a rod first end may be inserted into an incision through which one of the end guide tools has been inserted, and then guided into a channel of an adjacent end or intermediate guide tool. The rod is then guided into and through all remaining channels with first and second ends of the rod each in contact with a flexible wall or deployed tang of a respective end guide tool with the tangs biasing against the rod ends, and with the rod extending through all associated guide tools. The multi-purpose installation tool sleeve is then utilized as a rod pusher by rotating the nut and sliding the closed end of the sleeve toward the lower guide tool end, the sleeve end contacting the rod and pushing the rod toward the bone screw.

[0017] The attachment structure for joining the guide tool to the bone screw includes radial mating projections and receivers or grooves that allow the guide tool to be twisted on and twisted from the head of the bone screw. For example, an external attachment on the bone screw head can have tapered undercut upper surfaces. Additional attachment structures according to the invention include snap-on/twist off, snap-on/pry-off, slide-on/push-off, snap- or slide-on/slide off, and other combinations. It is foreseen that other attachment structure could be used such as clip-on/clip-off, clip-on/twist-off, snap-on/snap-off, spring-on/spring-off, spring-on/twist-off, set screws, etc. The attachment structure secures the guide tool to the bone screw during insertion of the screw into bone, but allows the tool to release from the bone screw for removal of the tool at the end of the procedure by rotation of the tool about a central axis thereof or by some other mechanism, as described herein.

OBJECTS AND ADVANTAGES OF THE INVENTION

[0018] Therefore, the objects of the present invention are: to provide a compact tool assembly for supporting and installing bone screws and other implants with minimal

surgical invasion to the patient; to provide such an assembly wherein a tool providing support and stabilization for implant engaging members of the assembly during bone screw implantation may also be utilized for deployment of rod containment tangs and as a rod reducer; to further provide a set of tools for implanting a spinal rod for support or alignment along a human spine with minimal surgical invasion of the patient; to provide such a set of tools including a pair of end tool guides for slidably guiding opposed ends of the rod toward end bone screws attached to the end guide tools; to provide such a set of tools including intermediate guide tools for each intermediate bone screw that guide the rod in slots therethrough to respective bone screws; to provide such a set of tools including rod and closure top installation tools for assisting in securing the rod in the bone screws; to provide such a set of tools wherein the guide tools are easily attached to and disengaged from the bone screws; to provide such a set of tools wherein the guide tools, guide tool supports or stabilizers, tang containment and deployment tools, rod reduction tools, bone screw installation tools and closure top installation tools are all easily aligned, positioned, and engaged, if necessary, with respect to the bone screw and are disengaged from the bone screw and other tools in the installation assembly by manual manipulation of the surgeon; to provide a method of implanting a rod into bone screws within a patient with minimal or less surgical invasion of the patient; to provide such a method utilizing the previously described tools for percutaneous implantation of such a rod; and to provide such a set of tools and methods that are easy to use and especially adapted for the intended use thereof and wherein the tools are comparatively inexpensive to produce.

[0019] Other objects and advantages of this invention will become apparent from the following description taken in conjunction with the accompanying drawings wherein are set forth, by way of illustration and example, certain embodiments of this invention.

[0020] The drawings constitute a part of this specification and include exemplary embodiments of the present invention and illustrate various objects and features thereof.

BRIEF DESCRIPTION OF THE DRAWINGS

[0021] **FIG. 1** is an exploded front elevational view of a tool assembly according to the present invention showing a driver tool, a multi-purpose installation tool implant engaging member stabilizer sleeve/tang container and deployer/rod pusher and reducer and an end guide tool shown with an attached polyaxial bone screw.

[0022] **FIG. 2** is an enlarged front elevational view of an intermediate guide tool of the invention.

[0023] **FIG. 3** is an enlarged side elevational view of the intermediate guide tool of **FIG. 2**.

[0024] **FIG. 4** is an enlarged rear elevational view of the intermediate guide tool of **FIG. 2**.

[0025] **FIG. 5** is an enlarged front elevational view of the end guide tool of **FIG. 1**.

[0026] **FIG. 6** is an enlarged side elevational view of the end guide tool of **FIG. 5**.

[0027] **FIG. 7** is an enlarged rear elevational view of the end guide tool of **FIG. 5**.

[0028] **FIG. 8** is a cross-sectional view of the end guide tool, taken along the line **8-8** of **FIG. 5**.

[0029] **FIG. 9** is an enlarged cross-sectional view of the intermediate guide tool, taken along the line **9-9** of **FIG. 2**.

[0030] **FIG. 10** is an enlarged cross-sectional view of the intermediate guide tool, taken along the line **10-10** of **FIG. 2**.

[0031] **FIG. 11** is an enlarged bottom plan view of the intermediate guide tool of **FIG. 2**.

[0032] **FIG. 12** is an enlarged and fragmentary perspective view of a polyaxial bone screw of the invention.

[0033] **FIG. 13** is an enlarged and fragmentary front elevational view of the polyaxial bone screw of **FIG. 12**.

[0034] **FIG. 14** is an enlarged and fragmentary side elevational view of the polyaxial bone screw of **FIG. 12**.

[0035] **FIG. 15** is an enlarged and fragmentary side elevational view of the polyaxial bone screw of **FIG. 12** disposed opposite the side shown in **FIG. 14**.

[0036] **FIG. 16** is an enlarged top plan view of the polyaxial bone screw of **FIG. 12**.

[0037] **FIG. 17** is an enlarged and fragmentary front elevational view of the polyaxial bone screw of **FIG. 12** and the intermediate guide tool of **FIG. 2**, shown at an early stage of a twist-on installation of the intermediate guide tool to the bone screw head.

[0038] **FIG. 18** is an enlarged and fragmentary cross-sectional view of the intermediate guide tool and polyaxial bone screw installation, taken along the line **18-18** of **FIG. 17**.

[0039] **FIG. 19** is an enlarged and fragmentary cross-sectional view similar to **FIG. 18**, showing a later stage of the twist-on installation of the intermediate guide tool to the bone screw head.

[0040] **FIG. 20** is an enlarged and fragmentary cross-sectional view similar to **FIGS. 18 and 19**, showing the intermediate guide tool installed on the bone screw head.

[0041] **FIG. 21** is an enlarged, fragmentary and cross-sectional view, taken along the line **21-21** of **FIG. 20**, showing the intermediate guide tool installed on the bone screw head.

[0042] **FIG. 22** is an enlarged front elevational view of the multi-purpose tool shown in **FIG. 1**.

[0043] **FIG. 23** is a cross-sectional view of the multi-purpose tool taken along the line **23-23** of **FIG. 22**.

[0044] **FIG. 24** is an enlarged bottom plan view of the multi-purpose tool of **FIG. 22**.

[0045] **FIG. 25** is an enlarged and fragmentary cross-sectional view of a portion of the multi-purpose tool shown in **FIG. 23**.

[0046] **FIG. 26** is an enlarged and fragmentary side elevational view of the driver shown in **FIG. 1** having a handle, a nut fastener and a stem, with the nut fastener being shown in a first, unengaged position.

[0047] **FIG. 27** is an enlarged and fragmentary front elevational view of the driver tool similar to **FIG. 26**, showing the nut fastener in a second or intermediate position.

[0048] **FIG. 28** is an enlarged and fragmentary side elevational view similar to **FIG. 27** and further showing a cross-sectional view of the nut fastener, taken along the line **28-28** of **FIG. 27**.

[0049] **FIG. 29** is an enlarged cross-sectional view similar to **FIG. 23**, showing an early stage of the installation of the multi-purpose tool to the end guide tool (shown in side elevation as in **FIG. 6**).

[0050] **FIG. 30** is an enlarged cross-sectional view similar to **FIG. 29**, showing the multi-purpose tool installed to the end guide tool (shown in side elevation).

[0051] **FIG. 31** is an enlarged cross-sectional view of the multi-purpose tool, taken along the line **31-31** of **FIG. 30**, showing the end guide tool in front elevation.

[0052] **FIG. 32** is an enlarged and fragmentary cross-sectional view of the multi-purpose tool similar to **FIG. 31**, shown attached to the end guide tool and also showing a sliding engagement stage of attachment to the driver (shown in front elevation).

[0053] **FIG. 33** is an enlarged and fragmentary front elevational view similar to **FIG. 32**, showing the driver nut fastener in the intermediate position shown in **FIG. 27**.

[0054] **FIG. 34** is an enlarged and fragmentary front elevational view similar to **FIG. 33**, showing the driver in fixed engagement with the guide tool.

[0055] **FIG. 35** is an enlarged and fragmentary view similar to **FIG. 34**, showing the driver in fixed engagement with the guide tool and with the driver nut fastener shown in cross-section as in **FIG. 28**, and the multi-purpose tool shown in cross-section as in **FIG. 32**.

[0056] **FIG. 36** is a partial and generally schematic cross-sectional view of a patient's spine, showing a thin guide pin installed at a first side thereof and a bone screw tap tool and threaded bore made thereby at a second side thereof.

[0057] **FIG. 37** is a partial and generally schematic view of a patient's spine showing a tool assembly according to the invention with attached bone screw being guided toward the threaded bore in a vertebra in an early stage of a process according to the invention.

[0058] **FIG. 38** is a partial and generally schematic view of a patient's spine, showing an end guide tool and the multi-purpose tool of the present invention being positioned for use in a process according to the invention.

[0059] **FIG. 39** is a partial and generally schematic view of a patient's spine, showing a pair of end tools and a pair of intermediate tools of the present invention being positioned for use in a process according to the invention.

[0060] **FIG. 40** is a partial and generally schematic view of a patient's spine, showing a pair of end tools with the flexible tangs containing a rod which has now been inserted and a pair of intermediate tools of the present invention with one of the intermediate tools shown with an attached multi-purpose tool in a rod reduction application and one of the end guide tools shown partially cut-away, illustrating a closure top installation tool disposed within the end tool and cooperating with a bone screw closure member, the tools being utilized in an early stage of rod implantation to guide the rod toward the bone screws.

[0061] **FIG. 41** is a partial and generally schematic cross-sectional view of the spine, taken along the line **41-41** of **FIG. 40**, showing an early stage of implanting a rod according to a process of the invention.

[0062] **FIG. 42** is a partial and generally schematic view of a patient's spine similar to **FIG. 40**, showing cut-away portions of all four tool assemblies, illustrating an intermediate stage of implanting a rod.

[0063] **FIG. 43** is a partial and generally schematic view of a patient's spine similar to **FIG. 42**, showing cut-away portions of three of the tool assemblies and one assembly without an end tool, illustrating the rod fully installed in all the bone screws.

[0064] **FIG. 44** is an exploded front elevational view of an anti-torque tool assembly according to the present invention showing an antitorque tool and a closure top installation tool cooperating with a break-away bone screw closure member.

[0065] **FIG. 45** is a bottom plan view of the anti-torque tool shown in **FIG. 44**.

[0066] **FIG. 46** is a fragmentary and front elevational view of a bone screw with attached break-away closure member and installed rod, and further showing the closure top installation tool of **FIG. 44** with the anti-torque tool.

[0067] **FIG. 47** is a fragmentary and front elevational view of a bone screw and anti-torque tool with portions broken away to show a torque driver advancing toward the break-away closure member in a process according to the invention.

[0068] **FIG. 48** is a fragmentary and front elevational view of the bone screw and anti-torque tool similar to **FIG. 47**, with portions broken away to show a fully installed rod and closure member with the break-away head removed from the top by the torque driver.

[0069] **FIG. 49** is an enlarged and fragmentary front elevational view showing an alternative snap- or twist-on and twist-off attachment structure according to the invention on a guide tool and on a cooperating polyaxial bone screw head.

[0070] **FIG. 50** is an enlarged and fragmentary front elevational view of the attachment structure shown in **FIG. 49** showing the guide tool installed on the bone screw head.

[0071] **FIG. 51** is an enlarged and fragmentary view of the attachment structure shown in **FIG. 49** with portions removed to show the detail thereof showing an early stage of the snap on installation of the guide tool on the bone screw head.

[0072] **FIG. 52** is an enlarged and fragmentary view similar to **FIG. 51** showing a later stage of installation of the guide tool on the bone screw head.

[0073] **FIG. 53** is an enlarged and fragmentary view similar to **FIGS. 51 and 52** showing the guide tool installed on the bone screw head.

[0074] **FIG. 54** is an enlarged and fragmentary front elevational view of a polyaxial bone screw shank with a pivotally attached head or receiver and shown with a guide tool, with portions broken away to show the detail thereof, illustrating a second alternative snap-on and pry-off attachment structure according to the invention on a guide tool and on the polyaxial bone screw head, showing and early stage of snap-on installation.

[0075] **FIG. 55** is an enlarged and fragmentary view, identical to **FIG. 54** with the exception that an intermediate stage of snap-on installation is shown.

[0076] **FIG. 56** is an enlarged and fragmentary view, identical to **FIG. 54** with the exception that the guide tool is shown fully installed on the bone screw head.

[0077] **FIG. 57** is an exploded perspective view of a bone screw having a shank and a head or receiver, the receiver having a third alternative snap-on or slide-on and slide-off or push-off attachment structure according to the invention.

[0078] **FIG. 58** is an enlarged front elevational view of the receiver of **FIG. 57**.

[0079] **FIG. 59** is an enlarged side elevational view of the receiver and shank of **FIG. 57** shown with a guide tool with cooperating attachment structure.

DETAILED DESCRIPTION OF THE INVENTION

[0080] As required, detailed embodiments of the present invention are disclosed herein; however, it is to be understood that the disclosed embodiments are merely exemplary of the invention, which may be embodied in various forms. Therefore, specific structural and functional details disclosed herein are not to be interpreted as limiting, but merely as a basis for the claims and as a representative basis for teaching one skilled in the art to variously employ the present invention in virtually any appropriately detailed structure.

[0081] With reference to **FIG. 1**, and for example, also **FIGS. 37 and 40**, reference numeral **1** generally designates a tool assembly according to the present invention and reference numeral **2** generally designates a tool set according to the invention, made up of a number and variety of tool assemblies **1** for use in installing a set of bone screws **4** into a patient's spine **6**, followed by the installation of an orthopedic spinal rod or longitudinal member **8** into the bone screws **4** in a process according to the present invention.

[0082] The tool embodiment assembly **1** includes an end guide tool **9** or an intermediate guide tool **10** mated with a multi-purpose installation tool **12** configured to function as a guide tool stabilizer and supporter, a tang container and deployer and a rod pusher and reducer. The tool assembly **1** may further include a driver **14**. A set **2** of the illustrated embodiment includes a pair of end guide tools **9** and a plurality of intermediate guide tools **10**, which in the illustrated embodiment includes a pair of intermediate guide tools **10** on each side of a patient's spine **6**, but which can include none, one or many intermediate guide tools **10** depending upon the particular application, so that one intermediate guide tool **10** is used for each intermediate bone screw **4** to which the rod **8** is to be attached.

[0083] The driver **14** is used in conjunction with the guide tool **9** and the guide tool **10** to implant bone screws **4** in the patient's spine **6** and, in particular, in vertebrae **16** along the spine **6** as shown in **FIG. 37**. Each end guide tool **9** and intermediate guide tool **10** is configured to cooperate with the multi-purpose installation tool **12** to install the rod **8**. However, it may be sufficient according to a process of the invention to not utilize the multi-purpose installation tool **12** or to use only one multi-purpose installation tool **12** in a particular tool set **2**, as shown in **FIG. 40**. Rods **8** or other longitudinal members are often installed on both sides of the spine **6** during the same procedure.

[0084] It is noted that any reference to the words top, bottom, up and down, and the like, in this application refers to the alignment shown in the various drawing figures, as well as the normal connotations applied to such devices, and is not intended to restrict positioning of the assembly **1** or the tool set **2** in actual use.

[0085] The end guide tool **9** is illustrated in **FIG. 1** and **FIGS. 5 through 8**. In particular, each end guide tool **9** has an elongate body **18** that is sized and shaped to be sufficiently long to extend from implanted bone screws **4** through an exterior of a patient's skin **20** so as to provide an outwardly extending and upper handle portion **22** that allows and provides for gripping by a surgeon during procedures utilizing the tool set **2**, with or without an attached multi-purpose installation tool **12** and/or driver **14**.

[0086] Each of the end guide tools **9** further includes an intermediate portion **24** and a lower implant engaging portion **26** which includes opposed implant engaging members for securing one the implants there between. Each end guide tool **9** has a substantially flat back wall **28** joining a pair of substantially cylindrically shaped side walls **32** and **33**. The back wall **28** provides a flexible holding structure that includes a pair of parallel slits **34** extending from near the lower handle portion **22** to an end **36** of the tool **9**. When pressed upon by a rod **8**, a flap or flexible tang **38** disposed between the slits **34** in the back wall portion is configured to flex or spring radially outwardly from the bottom and about the top thereof in a deployed position, as is shown in **FIG. 6**. The back wall portion flap or tang **38** provides a surgeon with some additional working space and flexibility when working with the rod **8** during surgery, so the rod **8** can extend beyond the bone screws **4** while remaining under resilient tension produced by outward biasing of the flexible back wall portion so that the rod **8** remains in a desired position and under control. Further, the tang or flap **38** also functions to urge the rod **8** toward the other tools in the tool set **2**, as shown in **FIG. 40** and as will be discussed more fully below.

[0087] The upper portion **22** of each end guide tool **9** includes a laterally or sideways opening channel **39**, forming a U-shaped cross-section, a C-shaped cross-section, a crescent shaped cross-section or the like having a generally elongate and axially extending opening **40** with a side-to-side width **42**. Preferably, the channel **39** mates with other channel structure described below so as to extend the entire length of the end guide tool **9**. The opening **40** communicates with and forms part of the channel **39** that opens at an upper end **43** of the guide tool **9** and also opens perpendicularly with respect to a central axis of the guide tool **9** or laterally to one side of the end guide tool **9**, thus defining the

opening **40**. The opening **40** narrows near the upper end **43** providing a slot **44** having a side-to-side width **45** that is smaller than the side-to-side width **42**. The slot **44** is configured for sliding engagement with a rotational locking pin **46** disposed on the driver **14** and discussed more fully below. Disposed on either side of the slot **44** are co-planar surfaces **47** and **48** that are parallel with the back wall **28**. The surfaces **47** and **48**, as well as the back wall **28**, provide alignment surfaces when the multi-purpose tool **12** is inserted onto the guide tool **9** discussed more fully below.

[**0088**] The opening **40** is of substantially constant width through a mid-section **48** of the handle portion **22**, sufficiently wide to receive additional tools and/or a closure top for sideways loading into the channel **39**, as will be discussed below.

[**0089**] The upper portion **22** also includes an outer helically wound discontinuous guide and advancement structure **50** disposed on outer surfaces of both of the substantially cylindrically shaped side walls **32** and **33**, which may include conventional helically wound V type threads, buttress threads, helically wound square threads, or other guide and advancement structure to cooperate with equivalent or mateable structure within the multi-purpose installation tool **12** and the driver **14**, as described more fully below. The advancement structure **50** extends from near the intermediate portion **24** to the open end **43**. The back wall **28** extending between the threaded sides **32** and **33** has an outer substantially planar and smooth surface finish.

[**0090**] Extending from the upper portion **22** and into the intermediate portion **24** of each end guide tool **9** is an outward facing channel **51** that has an opening **52** with a side-to-side width **53** that is somewhat smaller than the width **42** of the upper handle portion **22**, such that the channel **51** and opening **52** are sized and shaped to receive and allow passage of certain tools and implants, as described below.

[**0091**] Furthermore, a remaining portion of the end guide tool intermediate portion **24** and the lower portion **26** includes a groove or channel **55**, with an elongate, axially extending and radially outward opening **57**, having a side-to-side width **58** that is slightly smaller than the width **42** of the opening **40**, but larger than the slot width **45** and the opening width **53**. The channel opening **57** is disposed opposite the flexible tang or flap **38**. All of the channels **39**, **51** and **55** communicate with one another and are aligned with one another so as to provide a continuous elongate interior and sideways open passageway with an open side from near the top end **43** to near the bottom **36** thereof. This passageway provides a continuous open path of non-uniform cross-sectional radius throughout from the top **43** to the bottom **36** thereof that is parallel to an elongate axis A of each end guide tool **9**. As will be discussed more fully below, each end guide tool channel opening **57** is sized and shaped to slidingly receive a respective end **59** of the rod **8** therein. It is foreseen that one or all of the channel openings forming the open side that extends from near the top end **43** to near the bottom **36** of the guide tool **9** may be sized and shaped to receive the end **59** of the rod **8**. It is also foreseen that the rod **8** may be of uniform or non-uniform diameter, regular or uneven surface construction, or smooth or roughened surface finish, and that the channel openings may in turn be sized and shaped to receive such a rod end that may exhibit a greater or smaller width or diameter than at other locations along the rod.

[**0092**] The slits **34** are spaced in order to have a back wall or flap flex region having a size and shape to allow at least partial passage of a respective end **59** of the rod **8** between the side walls **32** and **33**. Also located near the end guide bottom **36** is a rod abutment recess **61** that is sized and shaped for the purpose of bridging the rod **8** when the end guide tool **9** is rotated for removal, as described below. However, it is foreseen that other removal means could be used. The end guide tool **9** also receives a closure top **62**, as will be described below. Still further, near the bottom **36** of each of the end guides **9** on inner surfaces of the side walls **32** and **33**, is a helical wound, discontinuous guide and advancement structure **64** which may include conventional helically wound V-shaped threads, buttress threads, reverse angle threads, helically wound square threads, or other guide and advancement structure to cooperate with equivalent or mateable structure within the bone screw heads **4** and on the closure top **62**, as also described below.

[**0093**] At the lower portion **26**, the substantially cylindrical side walls **32** and **33** include an outer radially extending bevel **66** and substantially cylindrical outer side walls **68** and **69**, respectively. The walls **68** and **69** uniformly increase the thickness of the respective side walls **32** and **33**, resulting in a substantially cylindrical cross-section of greater diameter than a diameter created by an outer surface of the side walls **32** and **33** at the intermediate portion **24**.

[**0094**] As will be discussed more fully below, in addition to increasing the diameter, the walls **68** and **69** are configured with co-planar front walls or facets **70** and co-planar back walls or facets **71** with the facets **70** being disposed parallel to the facets **71**, providing for alignment and mating with an interior of the multi-purpose installation tool **12** to ensure that the end guide tool **9** is retained in a selected, non-rotatable position with respect to the multi-purpose installation tool **12** when installed therein. Each of the walls **68** and **69** can include an abutment pin **67** located at an outer surface thereof and near the bottom or end **36**. The pin **67** may serve as a stop for the multi-purpose installation tool **12** as will be described more fully below; however, such a pin stop is not always needed.

[**0095**] Near the end or bottom **36** of each end guide tool **9**, disposed on an inner surface of each of the side walls **32** and **33**, is a radially inward facing attachment structure, generally **72**, that will be described below in conjunction with a similar structure on the intermediate guide tool **10** and the bone screw **4**.

[**0096**] Each of the intermediate guide tools **10**, specifically illustrated in FIGS. **2** to **4**, have a somewhat similar overall shape when compared to the end guide tools **9** in that both are preferably of the same axial length and width and also have much structure in common; however with certain differences as noted. Each intermediate guide tool **10** has an overall elongate body **74** with an upper handle portion **76**, an intermediate portion **77** and a lower implant engaging portion **78** which includes opposed implant engaging members for securing one of the implants there between. In the upper portion **76**, the body **74** is generally C-shaped defining a radially outward opening **79** communicating with an elongate and axially extending channel **80** defined by a rear wall

81 having a lower web edge **96** and side walls **82** and **83**. With reference to **FIG. 2**, the channel **80** front opening **79** extends parallel to an axis B of the body **74** and has a side-to-side width **85** configured to receive tools and elements described below.

[**0097**] Similar to the end guide tool **9**, the opening **85** narrows near an upper end **87** providing an elongate slot **88** having a side-to-side width **89** that is smaller than the width **85**. The slot **88** is configured for sliding engagement with the pin **46** disposed on the driver **14** and discussed more fully below. Disposed on either side of the slot **88** are co-planar surfaces **91** and **92** that are parallel with the rear wall **81**. The surfaces **91** and **92**, as well as the rear wall **81**, provide alignment surfaces when the multi-purpose tool **12** is inserted onto the guide tool **10**, discussed more fully below. Below the slot **88**, the side-to-side opening width **85** is substantially constant through a mid-section **90** of the handle portion **76**, sufficient to receive additional tools and/or a closure top, as will be discussed below.

[**0098**] The upper or handle portion **76** also includes an outer helically wound discontinuous guide and advancement structure **93** disposed on outer sides of both of the substantially cylindrically shaped side walls **82** and **83**, which may include conventional helically wound V-threads, helically wound square threads, buttress threads or other guide and advancement structure to cooperate with equivalent or mateable structure within the multi-purpose installation tool **12** and the driver **14** as described more fully below. The advancement structure **93** extends from near the intermediate portion **77** to the open end **87**. An outer surface of the rear wall **81** extending between the threaded sides **32** and **33** is substantially planar and smooth.

[**0099**] The upper or handle portion **76** further includes an outward facing channel **94** communicating with the channel **80**. The channel **94** is defined in part by a rear wall or web **95** having a lower end with the web edge **96**, the wall **95** being integral with the wall **81**. Communicating with the channel **94** is an elongate and axially extending opening **98** having a side-to-side width **99** that is somewhat smaller than the width **85** of the opening **79**. The opening **98** is further defined by the walls **82** and **83**. The channel **94** and opening **98** are configured to receive, contain and allow translational movement therealong or rotational relative movement of certain tools, as described more fully below. Although not shown in the drawings, it is foreseen that the channel **94**, channel opening **98** and rear wall or web **95** may extend into the intermediate portion **77** to provide greater strength and stability to the lower portion **78** of the intermediate tool **10**, with the opening **98** also extending into the lower portion **78** providing greater retention of small tools or parts being inserted through the channel **94**.

[**0100**] The intermediate portion **77** of the intermediate tool **10** includes two spaced side walls or legs **102** and **103**, extending from and integral with the side walls **82** and **83**, respectively. The legs **102** and **103** have outer surfaces that are partially cylindrical.

[**0101**] Similar to the end tool **9**, at the juncture of the intermediate portion **77** and the lower portion **78**, each of the legs **102** and **103** include an outwardly facing radially extending bevel **106** integral with substantially cylindrical outer side walls **107** and **108**, respectively. The outer walls **107** and **108** extend along the length of the lower portion **78** and uniformly increase the thickness of the respective legs **102** and **103**, resulting in a substantially cylindrical cross-section of greater outer diameter at the lower portion **78** than an outer diameter created by the outer surfaces of the legs **102** and **103** along the intermediate portion **77**. As will be discussed more fully below, in addition to increasing the diameter, the walls **107** and **108** are configured with co-planar front facets or walls with flat surfaces **109** and co-planar rear facets or walls with flat surfaces **110**, the facets **109** disposed parallel to the facets **110**, providing for alignment with an interior of the multi-purpose installation tool **12** to ensure that the intermediate guide tool **10** is properly mated with and retained in a selected, non-rotatable position with respect to the multi-purpose installation tool **12** when installed therein.

[**0102**] Along both the intermediate and lower portions **77** and **78** of the intermediate tool **10**, the legs **102** and **103** define an elongate and axially extending passthrough slot **111** sized and shaped to slidingly receive the rod **8**. The slot or opening extends from the lower edge of the web end **96** of the rear wall **95** to an open end or bottom **112** of the tool **10** configured to secure an open ended spinal surgery implant there between.

[**0103**] Near the bottom **112** of each implant engaging leg member **102** and **103** of the intermediate guide tool **10** is a helically wound but discontinuous square thread **114** and it is foreseen that other type of guide and advancement structure may be utilized such as helically wound flange forms, reverse angle threads, buttress threads, etc. The thread form **114** cooperates with the closure top **62**, as described below. The lower end of each leg **102** and **103** of the intermediate guide tool **10** also includes a cutout or rod-abutment recess **116** similar to the recess **61** described with respect to the end tool **9**. Each of the walls **107** and **108** can include an abutment pin **118** located at an outer surface thereof and near the bottom or end **112**. The pin **118** may serve as a stop for the multi-purpose installation tool **12** as will be described more fully below.

[**0104**] Also near the end or bottom **112** of each leg **102** and **103** of the intermediate guide tool **10**, disposed on inner substantially cylindrical surfaces **120** and **121**, respectively, is a radially inward facing attachment structure, generally **124**, substantially similar to the structure **72** disposed on the end guide tool **9**. The structure **124** will be described herein in conjunction with the bone screw **4**.

[**0105**] With reference to **FIGS. 9-11**, the embodiment shown includes an attachment structure **124** having a first projection, stop or pin **126** in spaced relation with a second smaller projection, stop or pin **127**, both pins being disposed on the surface **120**. In the embodiment shown, the structure **123** further includes a cooperating third projection, stop or pin **130** in spaced relation with a fourth smaller projection, stop or pin **131**, the pins **130** and **131** being disposed on the surface **121**.

[**0106**] The larger pins **126** and **130** are substantially configured the same, both being substantially rounded, radially inward projecting nodules, each having a ridge or lip **132** and **133**, respectively, projecting upwardly toward the guide and advancement structure **114** and that preferably follows the curvature of the respective leg inner surface **120** and **121**.

[**0107**] The lips **132** and **133** with respective surfaces **120** and **121** define slots **134** and **135**, respectively, for receiving

the bone screw **4** as will be discussed more fully below. The pin **126** is configured slightly larger than the pin **130**, requiring similar modification in the bone screw **4**, resulting in a method of operation wherein the bone screw **4** may only be mated with the guide **9** or **10** from a single direction, ensuring appropriate alignment between the bone screw **4** and guide tool advancement structure **114** with respect to the installment of the closure top **62**.

[**0108**] Each of the larger pins **126** and **130** is also disposed at substantially the same distance from respective bottom surfaces **138** and **139**, at the end **112** of the guide tool **10** and adjacent a rod-abutment recess **116**. Furthermore, each of the larger pins **126** and **130** is also disposed at substantially the same distance from respective parallel seating surfaces **140** and **141**, that form a base of the guide and advancement structure **114**. Additionally, in this embodiment the pins **126** and **130** are disposed in diametrically opposed relation when viewed in cross-section as shown in **FIG. 10**.

[**0109**] The smaller pins **127** and **131** are also substantially configured the same, the pin **131** being slightly larger than the pin **127**, but otherwise both pins **127** and **131** being substantially rounded, radially inwardly projecting nubs, each disposed at substantially the same distance from the respective bottom surfaces **138** and **139** and the respective seating surfaces **140** and **141**. Furthermore, the pins **127** and **131** are disposed in diametrically opposed relation when viewed in cross-section as shown in **FIG. 10**. Each of the pins **127** and **131** are disposed closer to the respective end surfaces **138** and **139** than are the larger pins **126** and **130**. It is noted that other orientations and pin sizes may be utilized according to the invention, with the pin sizes and locations cooperating with respective features on the bone screws **4**. Preferably, the pins are of different sizes to provide for mating of the guide tool **9** or **10** with the bone screw **4** from a single direction, resulting in a desired alignment between the bone screw **4** guide and advancement structure **114** and the closure top **62** guide and advancement structure.

[**0110**] The pins **126**, **127**, **130** and **131** cooperate and mate with the bone screw **4**, at a receiver portion, generally identified by the reference numeral **145**, of a head **146** thereof. With reference to **FIGS. 12-15**, each of the bone screws **4** further includes a threaded shank **148** attached to the head **146**, the shank **148** for screwing into and seating in a vertebra **16** that is part of the human spine **6**. The head **146** includes first and second arms **150** and **151** that define a rod receiving channel **153** passing therethrough. Each of the bone screw shanks **148** includes an upper portion **154** that extends into the head **146** and is operationally secured therein, so that the head **146** is rotatable on the shank **148** until locked in position through engagement with the rod **8** under pressure.

[**0111**] The receiver portion **145** is disposed on outer surfaces of the arms **150** and **151**. The receiver portion **145** of arm **150** includes a slot or groove **158** communicating with a recess **159** defined in part by a flange **160**. The groove **158** and recess **159** open at a front surface **162** of the arm **150** and extend across a facet **163** and into a side surface **164** thereof. With reference to **FIG. 21**, the groove **158** is configured to mate with the large pin **126** with the lip **132** extending into the recess **159** and the flange **160** disposed in the slot **134** when the guide tool **10** is attached to the bone screw head **146**. The width of the slot **134** is sized to prevent passage therethrough of the pin **126** except by twisting or rotational relative movement therebetween. The receiver portion **145** of the arm **150** further includes a rounded aperture **165** disposed substantially centrally on a face or facet **167** of the arm **150**, the facet **167** disposed adjacent to the side surface **163**. The aperture **165** is configured to mate with the small pin **127**.

[**0112**] Similar to the arm **150**, the receiver portion **145** of the arm **151** defines a groove **168** communicating with a recess **169** defined in part by a flange **170**. The groove **168** and recess **169** open at a back surface **172** of the arm **151** and extend across a facet **173** into a side surface **174** thereof.

[**0113**] Similar to what is shown in **FIG. 21** with respect to the arm **150**, the groove **168** is configured to mate with the large pin **130** with the lip **133** extending into the recess **169** and the flange **170** disposed in the slot **135** when the guide tool **10** is attached to the bone screw head **146**. The receiver portion **145** of the arm **151** further includes a rounded aperture **175** disposed substantially centrally on a face or facet **177** of the arm **151**, the facet **177** disposed adjacent to the side surface **173**. The aperture **175** is configured to mate with the small pin **131**.

[**0114**] In the embodiment shown, to attach the bone screw head **146** to the guide tool **10**, the guide tool **10** is rotated about its axis B such that the legs **102** and **103** are lowered into place as shown in **FIGS. 17 and 18**, with the facets **167** and **177** of the head **146** disposed between the guide tool legs **102** and **103**, with the facet **167** adjacent the leg **102** and the facet **177** adjacent the leg **103**, thereby aligning the groove **158** with the large pin **126** and the groove **168** with the large pin **130**. The head **146** may then be twisted into place as shown by the arrow T in **FIGS. 18, 19** and **20**. The legs **102** and **103** may splay slightly as the head is twisted into place, but come to rest in a generally non-splayed configuration and held in place by the structure of the attachment mechanism to resist splaying.

[**0115**] In order to disengage the guide tool **9** or the guide tool **10** from the bone screw **4**, the guide tool **9**, **10** is rotated counterclockwise from an attaching configuration (opposite to the arrow T), when viewing from the top so as to disengage the lips **132** and **133** from the recesses **159** and **169**, respectively. In this manner, end guide tools **9** and intermediate guide tools **10** that have previously twisted on, now twist off of respective bone screws **4**.

[**0116**] While a preferred embodiment of the invention has the respective pins of the attachment structure on the guide tools and the grooves on the bone screw heads, it is foreseen that these elements could be reversed in total or part in accordance with the invention. Also, other suitable attachment structure could be used, such as sloped or tapered undercut surfaces on the screw heads that overlap, mate and interlock with radially or linearly projecting structure on or near the ends of the guide tools. Such projecting structure can be snapped on or clipped on and translated up to provide for anti-splay overlapping surfaces. In addition, a groove could be put in the outer surface of the screw head and a fin on the guide tool could snap or slide into the groove.

[**0117**] In the embodiment shown, the recesses **61** and **116** disposed on the respective guide tools **9** and **10** are sized, shaped and positioned so that when the rod **8** is located in the bone screws **4**, the guide tools **9** and **10** can rotate about

respective axes A and B, with the recess **61** and **116** allowing the respective guide tool **9** and **10** to straddle over the rod **8**, thereby allowing the guide tool **9** and **10** to twist relative to the bone screw **4** and free the attachment structures **72** and **124** from the receiver portion **145** of the bone screw **4** and thereafter be removed after all procedures are complete, as described below.

[**0118**] The closure top **62** closes between the spaced bone screw arms **150** and **151** to secure the rod **8** in the channel **153**. The closure top **62** can be any of many different plug type closures. With reference to **FIGS. 46-48**, preferably the closure top **62** has a cylindrical body **180** that has a helically wound mating guide and advancement structure **181**. The guide and advancement structure **181** can be of any type, including V-type threads, buttress threads, reverse angle threads, or square threads. Preferably the guide and advancement structure **181** is a helically wound flange form that interlocks with a reciprocal flange form as part of a guide and advancement structure **183** on the interior of the bone screw arms **150** and **151**.

[**0119**] A suitable locking guide and advancement structure of this type is disclosed in U.S. Pat. No. 6,726,689 from Ser. No. 10/236,123 which is incorporated herein by reference. The helically wound guide and advancement structures **64** and **114** in the respective guide tools **9** and **10** are sized and shaped to receive the mating guide and advancement structure **181** of the closure top **62** and align with the guide and advancement structure **183** of the bone screw **4** to form a generally continuous helically wound pathway, but does not require locking between the closure top **62** and the tools **9** and **10**, even when an interlocking flange form is utilized on the closure top **62**.

[**0120**] The guides **64** and **114** allow the closure top **62** to be rotated and the surgeon to develop mechanical advantage to urge or drive the rod **8**, while still outside or partially outside the bone screw **4**, toward and into the bone screw head **146**. This is especially helpful where the rod **8** is bent relative to the location of the vertebra **16** (which is sometimes the case) to which the rod **8** is to attach and is not easily placed in the bone screw head **146** without force and the mechanical advantage provided by the guides **64** and **114**. In particular, the guide and advancement structures **64** and **114** on the respective tools **9** and **10** are located and positioned to align with the guide and advancement structure **183** on the insides of the bone screw arms **150** and **151**, as shown in **FIG. 42** and pass the closure top **62** therebetween while allowing the closure top **62** to continue to rotate and to continuously apply force to the rod **8**, so as to aid in seating the rod **8** in the bone screw head **146**.

[**0121**] Each closure top **62** also preferably includes a break-off head **186** that breaks from the cylindrical body **180** in a break-off region **187** upon the application of a preselected torque, such as 95 to 120 inch-pounds. The break-off head **186** preferably has a hexagonal cross section faceted exterior that is configured to mate with a similarly shaped socket of a final closure driving or torquing tool **190** described below. It is foreseen that different driving heads or other methods of driving the closure top **62** can be utilized with certain embodiments of the invention, such as non-break-off closure top designs.

[**0122**] The present invention is not intended to be restricted to a particular type of bone screw, bone screw closure mechanism, or bone screw and guide tool attachment mechanism. In the present embodiment, a polyaxial type bone screw **4** is utilized wherein the shank **148** is locked in position by direct contact with the rod **8**. It is foreseen that the tool set **2** of the present invention can be used with virtually any type of bone screw, including fixed monoaxial and polyaxial bone screws of many different types wherein the head is locked relative to the shank by structure other than in the manner described in the illustrated embodiment. It is also foreseen that the screws could be cannulated.

[**0123**] With reference to **FIGS. 22-25**, the multi-purpose installation tool **12** of the tool assembly **1** of the invention includes an upper translation nut **202** rotatably and free wheelingably attached to a lower guide tool stabilizer or support sleeve **204**. The sleeve **204** has an inner substantially cylindrical surface **205** defining a substantially hollow passageway **206** sized and shaped to slidingly receive an end tool **9** or an intermediate tool **10** therein. Alternatively, is foreseen that the sleeve could have an inner and outer planar surface. The sleeve **204** is elongate and includes a receiving end **207**, a substantially cylindrical outer body **208** and a translation nut attachment end portion **210** disposed opposite the receiving end **207**. The receiving end **207** not only functions to receive the guide tool **9** or **10** into the sleeve **204**, but also as a pressing block **218** for contacting the flexible flap or spring tang **38** and as a pressing end **207** for contacting the rod **8** and translating the rod **8** toward the bone screw head **146** when the multi-purpose installation tool **12** is installed on the guide tool **9** or **10**, as will be discussed more fully below.

[**0124**] The cylindrical body **208** further defines a slotted U-shaped or C-shaped channel **212** that opens radially at an opening **213** and also opens at the receiving end **207** and extends substantially along a length of the body **208** to a location **214** spaced from the nut attachment end portion **210**. The channel opening has a side-to-side width **216** sized to receive the back wall tang portion or flexible flap **38** of the end guide tool **9** therethrough, when aligned therewith. For example, with reference to **FIG. 38**, the multi-purpose installation tool **12** is shown partially removed from an end guide tool **9** and deploying the tang **38** after the bone screw has been inserted. Because of the substantial length of the channel **212** as defined by the location **214** and because of the channel width **216**, the multi-purpose installation tool **12** can be removed, turned 180° and reattached to the end guide tool **9** thereby providing access through the channel opening **213** for protrusion of the back wall tang portion or flap **38** of the end guide tool **9**. The flap **38** is thus not encumbered or restricted by the tool **12** during the rod pushing application and the flap **38** can be flexed outwardly by a rod **8** (not shown)or other forces, when the devices are assembled in this configuration.

[**0125**] Disposed flush to the lower sleeve end **207** and rigidly attached to the inner cylindrical surface **205** is the solid guide tool alignment and tang/rod pressing block **218**. The block **218** has a substantially smooth, planar and rectangular surface **220** facing inwardly radially from the inner surface **205**. The block **218** also follows the curve of the cylindrical surface **220** at a surface **222** thereof. Thus, as shown in **FIG. 24**, the block **218** has a segment shape when observed from a bottom plan view. The term segment used herein is defined as the part of a circular area bounded by a chord and an arc of a circle cut off by the chord. This

segment shape of the block **218** provides a mechanical advantage for compressing the flexible flap **38** flush with the end guide tool **9** and for advancing the rod **8** into the bone screw **4** with the multi-purpose installation tool **12** which will be discussed more fully below.

[**0126**] The flat, rectangular surface **220** provides structure for installing the guide tool **9** or **10** in a mating and desired alignment with respect to the multi-purpose installation tool **12**. For example, with respect to the guide tool **10**, a preferred alignment is that the rear wall **81** of the tool **10** be disposed adjacent to the surface **220** when inserting the tool **10** into the multi-purpose installation tool **12**. Then, the tool **10** is slid into the multi-purpose tool sleeve **204**, with the block **218** preventing axial rotation of the tool **10** with respect to the sleeve **204**, and resulting in the preferred alignment of the opening **79** and the pass-through slot **11** of the tool **10** and the U-shaped channel **212** of the multi-purpose tool in this application.

[**0127**] With respect to the end guide tool **9**, the block **218** with the planar surface **220** provides for the insertion of the tool **9** in a first, installation tang containing position or a second, rod pushing position. When utilizing the assembly **1** of the invention to install a bone screw **4**, it is advantageous for the flexible back wall portion or tang **38** of the tool **9** to be fully restrained by the multi-purpose installation tool **12** and for the walls **68** and **69** to be locked in a non-splayable or anti-splay position. Therefore, in the first, bone screw installation tang containing position, the multi-purpose installation tool **12** is inserted onto the tool **9** with the back wall **28** of the tool **9** disposed adjacent to the sleeve surface **220**. Then, the tool **9** and the sleeve **204** are attached with the block **218** preventing axial rotation of the tool **9** with respect to the multi-purpose installation tool **12**. This results in the preferred alignment wherein the flexible back wall portion or tang **38** is disposed adjacent to the multi-purpose tool sleeve **204** and contained and disposed opposite the U-shaped channel **212**. After the bone screw **4** is installed and it is desired to install the rod **8** in two or more bone screws **4**, the multi-purpose installation tool **12** is removed from the end guide tool **9** and replaced thereon with the slot **44** and channel openings **40** and **94** adjacent to and facing the alignment block **218**.

[**0128**] The translation nut **202** of the multi-purpose installation tool **12** is substantially cylindrical in shape and is shown with outer grooves **223** to aid a surgeon in handling the multi-purpose installation tool **12** and rotating the nut **202**. The nut **202** further includes an inner cylindrical surface **224** defining an inner substantially cylindrical passage **226** communicating with the passage **206** of the sleeve **204**. The inner surface **224** further includes a helical guide and advancement structure as shown by a V-shaped thread **228** that is configured to mate with the guide and advancement structure **50** of the end guide tool **9** or the guide and advancement structure **93** of the intermediate guide tool **10**.

[**0129**] With reference to **FIG. 25**, the inner cylindrical surface **224** extends from an upper open end **230** of the translation nut **202** to an annular seating surface **232** extending radially outwardly and perpendicular to the cylindrical surface **224**. As will be discussed more fully below, the surface **224** with associated thread **228** is of a length that provides an equivalent translation distance of the multi-purpose installation tool **12**, and in particular the tang/rod pressing block **218**, with respect to the guide tool **9** or **10** such that the pressing block **218** can be used to gradually push the rod **8** toward the bone screw **4** for the entire translation distance by rotating the nut **202** which can be continued until the rod is fully seated in the head of the bone screw.

[**0130**] Also with reference to **FIG. 25**, at the annular seating surface **232**, the sleeve **204** is in sliding contact with the nut **202**. A lower portion **234** of the nut **202** further defines a second inner cylindrical surface **236** of greater diameter than the surface **224**. The surface **236** has a diameter slightly greater than a diameter of the sleeve **204** and is configured to slidingly receive the sleeve **204** into the nut **202** along the surface **236**. The nut **202** further defines an annular recess or groove **238** configured to receive a pin **240** rigidly fixed to the sleeve **204**. The pin **240** may be accessed for attachment and removal from the sleeve **204** through an aperture **242** disposed in the translation nut **202**. The pin **240** slidingly mates with the nut **202** within the recess **238**, keeping the nut **202** and sleeve **204** in an attached but freely rotatable relation.

[**0131**] With reference to **FIGS. 26-28**, the driver **14** of an assembly **1** according to the invention includes a handle **250**, a guide tool fastener or nut **252**, and an elongate cylindrical stem or shaft **254** having a lower cylindrical portion **255** integral with a bone screw engager shown as a socket **256**. The socket **256** is configured to mate with the upper part of the bone screw shank **154**. The shaft **254** with attached socket **256** is receivable in and passes through the interior of the guides **9** and **10**, such as the channel **80** of the guide tool **10**. The lower portion **255** has a slightly smaller diameter than a diameter of the remainder of the shaft **254**, this smaller diameter provides for adequate clearance of the portion **254** from the guide and advancement structures **64** and **114** when the shaft **254** is installed within the interior of the respective guide tools **9** and **10**. The stem or shaft **254** is rigidly attached to the handle **250** and coaxial therewith. Both the handle **250** and the guide tool fastener **252** include outer grooves **258** and **259** respectively, about outer cylindrical surfaces thereof to aid in gripping and rotating the respective components.

[**0132**] The guide tool fastener **252** is a substantially hollow cylinder disposed in coaxial relationship with the handle **250** and the shaft **254**. The fastener has a threaded inner cylindrical surface **262** disposed at a lower portion **263** thereof, the threaded surface **262** configured to mate with the guide and advancement structure **50** of the end guide tool **9** or the guide and advancement structure **93** of the intermediate guide tool **10**. The fastener **252** is disposed on the driver **14** between an annular surface **264** of the handle **250** and the pin **46** that is fixed to the shaft **254** and extends laterally therefrom.

[**0133**] The driver **12** further includes a lateral pin **266** projecting radially outwardly from a cylindrical surface **268** adjacent the handle **250**. In the embodiment shown, the cylindrical surface **268** is integral with the handle **250** and fixedly attached to the shaft **254**. The pin **266** is disposed within an annular recess **270** defined by the cylindrical surface **268**, and surfaces of the fastener **252**, including an upper seating surface **272**, a lower seating surface **274** and an inner cylindrical surface **276**. The pin **266** disposed in the recess **270** allows for both rotational and axial or vertical

translational movements of the fastener **252** with respect to the shaft **254**. Thus, as shown in **FIG. 26**, the fastener **252** is rotatable about an axis C. Furthermore, the fastener is slidable along the axis C between the annular surface **264** and the pin **46**, with **FIG. 26** showing a first or unattached position with the fastener **252** in contact with the annular surface **264** and **FIGS. 27 and 28** showing a second, engagement position, with the fastener **252** partially covering, but not contacting the pin **46**, with the pin **266** abutting the upper seating surface **272** prohibiting further downward or vertical (axial) translational movement of the fastener **252** with respect to the shaft **254**.

[**0134**] As stated previously herein, the pin **46** is configured for sliding engagement with both the slot **44** of the guide tool **9** and the slot **88** of the guide tool **10** when the driver shaft **254** is disposed in an interior of the guide tool **9** or **10**. When the pin **46** is received in the slot **44** or the slot **88**, any relative rotational movement between the guide tool **9** or **10** and the driver **14** is prevented, but the driver is free to slide axially with respect to the guide tool **9** or **10**. When the fastener or nut **252** is slid into the second position shown in **FIGS. 27 and 28** and the fastener is mated with the guide and advancement structure **50** of the end guide tool **9** or the guide and advancement structure **93** of the intermediate guide tool **10** by rotating the fastener **252** to a location adjacent to the pin **46**, with the pin **266** in contact with the upper seating surface **272**, relative axial movement between the driver **14** and the guide tool **9** or **10** is also prevented.

[**0135**] With reference to **FIGS. 1 and 29-35**, a three-component assembly **1** according to the invention including the guide tool **9**, the multi-purpose installation tool **12** and the driver **14** may be assembled as follows: The guide tool **9** shown with attached bone screw **4** is inserted into the multi-purpose installation tool **12** with the upper end **43** being inserted into the receiving end **207** of the multi-purpose installation tool **12**. With respect to the assembly shown in **FIGS. 29-31**, illustrated is a particular assembly wherein the multi-purpose installation tool **12** is being utilized as a support or stabilizer for the end guide tool **9** during installation of the bone screw **4** into the vertebra **16**, specifically, to contain and compress the tang **38** and to provide extra support to the walls, such as walls **68** and **69** of tool **9**. Thus, the guide tool **9** is received into the multi-purpose installation tool **12** with the rear wall **28** facing the alignment block **218** as shown in **FIG. 29**.

[**0136**] As the guide tool **9** is received into the multi-purpose installation tool **12**, rotational movement is prevented by the alignment block **218** in sliding contact with the flat surfaces **28** of the guide tool **9**. The translation nut **202** is then rotated clock-wise as viewed from the top end **230** and shown by the arrow X, with the thread **50** of the guide tool **9** mating with the thread **228** disposed on the inner surface **224** of the translation nut **202**. The translation nut **202** is preferably rotated until the upper end **43** of the guide tool **9** is positioned outside of the body of the nut **202** with a few of the threads **50** exposed as shown in **FIGS. 30 and 31**. Furthermore, the sleeve **204** cannot be translated beyond the pin **67** that stops the sleeve near the rod abutment recess **61** disposed near the end of the guide tool **9**. During rotation of the translation nut **202**, the guide tool **9** is held in a preferred bone screw installation position and any rotational movement of the tool **9** is prevented by the alignment block **218** in contact with the co-planar back walls or facets **71** of the guide tool **9** as well as the planar back surface of the tang **38**. As illustrated in **FIGS. 30 and 31**, when the guide tool **9** is fully installed in the multi-purpose installation tool **12** in this first or bone screw installation position, the flexible back wall portion or flap **38** is compressed and retained in place between the side walls **32** and **33** by the alignment block **218**.

[**0137**] When the multi-purpose installation tool **12** is used as a rod pusher with the guide tool **9** as shown in **FIGS. 38 and 41**, the multi-purpose installation tool **12** is preferably used first as an end guide tool stabilizer and tang **38** container, as already described herein, and thus must first be removed by rotating the translation nut **202** counter-clockwise until the multi-purpose installation tool **12** is disengaged from the end tool guide **9** thereby deploying the tang **38**. Thereafter, the multi-purpose installation tool **12** is removed and replaced on the guide tool **9** with the slot **44** and channel openings **40** and **94** adjacent to and facing the alignment block **218**. As the multi-purpose installation tool **12** reinserted onto the guide tool **9**, rotational movement is prevented by the alignment block **218** in sliding contact with the flat surfaces **47** and **48** of the guide tool **9**. The translation nut **202** is then rotated clock-wise as shown by the arrow X (**FIG. 29**), with the thread **50** of the guide tool **9** mating with the thread **228** disposed on the inner surface **224** of the translation nut **202**. Similar to what is shown in **FIGS. 30 and 31**, the translation nut **202** is rotated clockwise as shown by the arrow X, until the upper end **43** of the guide tool **9** is positioned outside of the body of the nut **202** with some of the threads **50** exposed. During rotation of the translation nut **202**, the guide tool **9** is held in position and any rotational movement of the tool **9** is prevented by the alignment block **218** in contact with the co-planar front walls or facets **70** of the guide tool **9**. When the multi-purpose installation tool **12** is used in this second or rod pushing position, the flexible back wall tang portion or flap **38** is not obstructed by the sleeve **204** of the multi-purpose installation tool **12** and may spring out or be further pushed out through the opening **213** of the U-shaped channel **212**.

[**0138**] An assembly **1** according to the invention may also include the intermediate guide tool **10** in the place of the guide tool **9** as shown in **FIGS. 40-42**. Because the intermediate guide tool **10** includes a pass-through slot **111** rather than a flexible back wall tang portion **38**, the alignment between the multi-purpose installation tool **12** and the guide tool **10** may be the same during bone screw installation as for the pushing of the rod **8**. Therefore, the tool guide **10** may be inserted into the multi-purpose installation tool **12** with either the rear wall **81** or the slot **88** adjacent to and facing the alignment block **218**.

[**0139**] Similar to the discussion herein with respect to the guide tool **9**, as the guide tool **10** is inserted into the multi-purpose installation tool **12**, rotational movement is prohibited by the alignment block **218** in sliding contact with either the rear wall **81** or the coplanar surfaces **91** and **92** of the guide tool **10**. The translation nut **202** is then rotated clock-wise as viewed looking toward the top **87** of the tool **10**, with the thread **93** of the guide tool **10** mating with the thread **228** disposed on the inner surface **224** of the translation nut. Similar to what is shown in **FIGS. 30 and 31**, the translation nut **202** is rotated until the upper end **87** of the guide tool **10** is positioned outside of the body of the nut **202** with some of the threads **93** exposed. During

rotation of the translation nut **202**, the guide tool **10** is held in position, with rotational movement of the tool **10** being prevented by the alignment block **218** in contact with the co-planar front walls or facets **109** or the co-planar rear walls or facets **110** of the guide tool **10**.

[**0140**] Further discussion of the assembly **1** in this application will be directed toward the end guide tool **9** shown in the drawings. Unless specifically stated otherwise, the intermediate guide tool **10** can be utilized in similar fashion to what is being described herein with respect to the end guide tool **9**.

[**0141**] With reference to **FIGS. 1 and 32-35**, after installation of the multi-purpose installation tool **12** to the guide tool **9**, the driver **14** is inserted into the guide tool **9**/multi-purpose installation tool **12** combination by inserting the socket end **256** into the end **43** of the guide tool **9** and sliding the shaft **254** into the interior of the guide tool **9** until the socket end **256** contacts and surrounds the upper part of the shank **154** of the bone screw **4** as shown in **FIG. 35**. As the shaft **254** is being inserted into the guide tool **9**, the pin **46** on the shaft **254** of the driver **14** is aligned with and slid into the slot **44** of the guide tool **9**. In order to more easily view the pin alignment process, the guide tool fastener **252** is placed in the first or unattached position with the fastener **252** in contact with the annular surface **264** as shown in **FIG. 32**. Also as shown in **FIG. 32**, preferably, the pin **46** is slid to a position disposed substantially within the slot **44** when the socket end **256** engages the shank **154** of the bone screw **4**. The guide tool fastener or nut **252** is then rotated clockwise as viewed from the handle and illustrated by the arrow Y in **FIG. 33**, from the first unattached position toward the second engaged position, mating the thread **50** located near the end **43** of the guide tool **9** with the inner threaded surface **262** of the nut **252** of the driver **14**. If, after the fastener **252** is rotated to a hand-tightened position, and a gap or space remains between the fastener **252** and the translation nut **202**, as shown in **FIG. 33**, the translation nut **202** may then be rotated counter-clockwise as shown by an arrow Z in **FIG. 33**, and hand-tightened until the translation nut **202** abuts against the fastener **252**, as shown in **FIG. 34**. The assembly **1** is then fully assembled and may be used to install the bone screw **4** into the vertebra **16** as will be described more fully below. Thereafter, the driver **14** may be removed by rotating the fastener **252** in a counter-clockwise direction (arrow Z) and sliding the shaft **254** out of the multi-purpose installation tool **12** through the open end **230**.

[**0142**] Another tool used in implanting a spinal rod **8** is an antitorque tool **300** illustrated in **FIGS. 44 and 45** and further shown in **FIG. 44** with a closure top installation tool **302** engaging the break-away portion **186** of the closure top **62**. The closure top installation tool **302** includes an upper handle portion **303** and a lower, closure top engagement portion **304** configured to mate with and rotate the closure top **62**.

[**0143**] The antitorque tool **300** is also preferably used with a closure top torquing tool **305**, shown in **FIGS. 47 and 48**. The tool **305** is used to torque and set the closure top **62**, so it is snug against the rod **8**, and thereafter break away the break-off head **186** in the manner shown in **FIG. 48**. The torquing tool **305** is preferably in the form of a socket as shown in the drawings to allow for adequate tightening of the closure top **62** and also ease in removal of the break-off head **186** as shown in **FIG. 48**.

[**0144**] The antitorque tool **300** includes a tubular hollow shaft **306** that is sized and shaped to be slidably received over the installation tool **302** and also the torquing tool **305**. The shaft **306** has a lower end portion **308** that has a pair of diametrically spaced, curved bridges **310**. Each of the bridges **310** is sized and shaped to fit over the rod **8**, shown in **FIGS. 47 and 48**. When in place, as illustrated in **FIG. 47**, the antitorque tool **300** allows a surgeon to counter torque applied by the torquing tool **305**, when applying torque to and breaking away the break-off head **186**. The antitorque tool **300** also has an upper handle **316** disposed perpendicular to the shaft **306** and having an opening **318** through which the installation tool **302** and the torquing tool **305** passes in the manner suggested by **FIGS. 46-48**.

[**0145**] In use, the previously described tools are utilized to attach one or more rods **8** to the human spinal column **6**. The procedure is begun by selection of a bone screw **4** in accordance with the size of the patient's vertebra **16** and the requirements of the spinal support needed. Bone screws **4** having a rotatable or polyaxial head **146** are preferred but not required for the procedure, as such allow relatively easy adjustment of the rod **8** in the tools **9** and **10** during placement and for movement of the tools **9** and **10**, as described below. The bone screw **4** is also preferably cannulated so as to be receivable over and guided by a guide pin **355** as discussed more fully below.

[**0146**] A relatively small incision, such as an incision **350** in the skin **20** is then made for each bone screw **4** to be used. Preferably, the incisions are sized so as to snugly receive the tools of the invention. The incisions **350** are stretched into a round shape with a circumference equal to or just slightly larger than the multi-purpose installation tool **12**. The skin **20** is relatively flexible and allows the surgeon to move the incision **350** around relative to the spine **6** to manipulate the various tools and implants, as required. In some cases, two screws can be inserted through one or the same incision.

[**0147**] With reference to **FIG. 36**, a drill (not shown) is utilized to form a first guide bore **366** in a vertebra **16** under guidance of non invasive imaging techniques, which procedure is well known and established. The thin pin or guide wire **355** is then inserted in the first guide bore **366**. This first guide bore **366** and associated thin pin **355** function to minimize stressing the vertebra **16** and provide an eventual guide for the placement and angle of the bone screw shank **148** with respect to the vertebra **16**.

[**0148**] The guide bore **366** is enlarged utilizing a cannulated drilling tool or tap **360** having an integral or otherwise attached cannulated and threaded bit **362** with an outer surface sized and shaped to correspond to the size and shape of the chosen threaded bone screw **4**. The drilling tool **360** cooperates with a cylindrical holder or sleeve **368** having an inner surface in slidable mating arrangement with the tool **360** and being held in a position substantially co-axial therewith. The holder **368** is sized and shaped to fit within the incision **350** and prevents soft tissues from being rolled up in the threaded bit **362** as it is rotated. The tool **360** further includes a handle **370** fixedly attached to the tool **360** located at an end portion **372** thereof and of a size and shape for rotating the bit **362** along the pin **355** and into the first bore **366**.

[**0149**] With the pin **355** still in place, the enlargement of the guide bore **366** begins by threading the thin pin **355**

through the end of the tap and inserting the holder **368** into the incision until the holder comes into contact with the vertebra **16**. The drill bit **362** is advanced downward along the pin **355** until the drill bit **362** comes into contact with the vertebra **16**. The tool **360** is then rotated within the holder **368** using the handle **370**, driving the bit **362** along the pin **355** until a full sized bore **380** is drilled to a depth desired by the surgeon. During drilling, the holder **368** remains stationary, shielding the surrounding tissue from the rotational movement of the bit **362** and tool **360**.

[**0150**] The tool **360** is then removed by rotating the bit **362** in reverse until the bit **362** is outside the bore **380**. The tool **360** is then removed from the holder **368**, followed by the removal of the holder **368** through the incision **350**.

[**0151**] Before placing the bone screw **4** in the vertebra **16**, the bone screw **4** is preferably joined to an associated guide tool **9** or **10**, with or without an associated multi-purpose installation tool **12**, and an associated driver **14**. It is foreseen that the driver can also be cannulated. It is possible, but typically not desirable, to join a guide tool **9** or **10** to the bone screw **4** after the installation of the bone screw **4** to the vertebra **16**. There also may be instances wherein it is desirable to join the bone screw **4** to an associated guide tool **9** or **10**, but not to the multi-purpose installation tool support **12** or the driver **14** until after the bone screw **4** is installed in the vertebra **16**, if at all. Furthermore, it is understood that the driver **14**, cannulated or not, may be used with a guide tool **9** or **10** without the multi-purpose installation tool **12**. However, it may be preferable to utilize the multi-purpose installation tool **12** during installation of a bone screw **4** into the vertebra **16** as the tool **12** provides some mechanical advantage and aids in preventing inadvertent splaying of side walls **32** and **33** of the end guide tool **9** and legs **102** and **103** of the intermediate guide tool **10**.

[**0152**] The attachment structure **124** of the intermediate guide tool **10** is joined to a bone screw **4** by first rotating the tool **10** relative to the bone screw **4** so that the legs **102** and **103** are positioned as shown in **FIGS. 17 and 18**, with the facets **167** and **177** of the head **146** disposed between the guide tool legs **102** and **103**, and with the facet **167** adjacent the leg **102** and the facet **177** adjacent the leg **103**, thereby aligning the groove **158** with the large pin **126** and the groove **168** with the large pin **130**. A slight splaying of the legs **102** and **103** is possible during alignment with the head arms **150** and **151**.

[**0153**] The head **146** is then twisted into place by rotating the tool **10** axially in a clockwise direction as shown by the arrow T in **FIGS. 18 and 19**.

[**0154**] The twist-on procedure described herein with respect to the attachment structure **124** of the intermediate tool **10** is also followed with respect to the end guide tool **9** attachment structure **72**. As previously stated herein, the attachment structure **72** is substantially similar to the attachment structure **124** of the intermediate tool **10**, with the only difference being that the end guide tool **9** includes a flexible back wall tang portion **38** rather than the pass-through slot **111** of the intermediate guide tool **10**.

[**0155**] After the bone screws **4** have been attached to the guide tools **9** and **10**, a multi-purpose installation tool **12** can be attached to each of the guide tools **9** and **10**. With respect to each of the intermediate guide tools **10**, the multi-purpose installation tool **12** is preferably installed as follows: The rear wall **81** of the tool **10** is positioned adjacent to the surface **220** and the tool **10** is inserted into the hollow passage **206** and slid into the rod pusher sleeve **204** until the end **87** contacts the translation nut **210**, with the block **218** preventing axial rotation of the guide tool **10** with respect to the multi-purpose installation tool **12**, and resulting in the preferred alignment of the sleeve slot **11** and the opening **79** of the tool **10** with the U-shaped channel **212** of the multi-purpose installation tool **12**. However, because the slot **11** is a pass-through slot, the alignment of the guide tool **10** with respect to the multi-purpose installation tool **12** is not critical to processes according to the invention. Therefore, in most instances the rear wall **81** of the tool **10** may also be positioned opposite the surface **220** upon entry into the multi-purpose installation tool **12**.

[**0156**] The translation nut **202** is then rotated with the thread **228** of the nut **202** mating with the thread **93** of the tool **10**. The nut **202** is rotated in a clockwise direction as illustrated by the arrow X in **FIG. 29** until the end **87** is disposed outside of the nut **202** and positioned similar to what is shown with respect to the multi-purpose installation tool **12** and end guide tool **9** assembly shown in **FIGS. 30 and 31**. The abutment pin **118** prevents further rotation of the nut **202** and advancement of the sleeve **204** beyond the pin **118**.

[**0157**] As shown in **FIGS. 29-31**, the end guide tools **9** are similarly equipped with multi-purpose installation tools **12**. In order to compress the tang **38** during installation of a bone screw **4** into a vertebra **16**, the tool **9** is received into the multi-purpose installation tool **12** with the back wall **28** of the tool **9** disposed adjacent to the surface **220**. Then the multi-purpose installation tool **12** is slid onto the tool **9** until the end **43** contacts the translation nut **202**, with the block **218** preventing axial rotation of the tool **9** with respect to the multi-purpose installation tool **12**, and resulting in the preferred alignment wherein the flexible back wall tang portion or flap **38** is disposed adjacent to the guide tool sleeve **204** disposed opposite the U-shaped channel **212**. The translation nut **202** is then rotated with the thread **228** of the nut **202** mating with the thread **50** of the end guide tool **9**. The nut **202** is rotated in a clockwise direction as illustrated by the arrow X in **FIG. 29** until the end **43** is disposed outside of the nut **202** and positioned as shown in **FIGS. 30 and 31**, but not beyond the pin **67**.

[**0158**] The driver **14** is then installed into the guide tool **9** as shown in **FIGS. 32-35** and as follows: The driver **14** is first prepared for ease of insertion by placing the guide tool fastener **252** in the first or unattached position with the fastener **252** in contact with the annular surface **264** of the driver **14** as shown in **FIG. 32**. Then, the driver end **256** is inserted into the guide tool **9** at the end **43** with the stem **254** being slid into the guide tool **9** with the pin **46** aligned with the channel **39** until coming to a stop with the pin **46** disposed in the slot **44** and the bone screw engager **256** in contact with the bone screw upper shank **154**. A slight rotation or jiggling of the bone screw shank **148** may be required for the hex socket of the bone screw engager **256** to become positioned in operational engagement with the hex shaped upper shank **154**. The guide tool fastener or nut **252** is then moved downward and toward the end **43** and then rotated clockwise as viewed from the handle **250** and illustrated by the arrow Y in **FIG. 33**, mating the thread **50**

disposed near the end **43** of the guide tool **9** with the inner threaded surface **262** of the nut **252** of the driver **14**. The nut **252** is rotated in this clock-wise fashion and hand-tightened until further translation of the nut **252** along the guide tool **9** is prevented by the pin **266** abutting the upper seating surface **272**.

[**0159**] If, after the fastener **252** is rotated to a hand-tightened position, and a gap or space remains between the fastener **252** and the translation nut **202** as shown in **FIG. 33**, the translation nut **202** is rotated counter-clockwise as shown by the arrow Z in **FIG. 33**, and hand-tightened until the translation nut **202** abuts against the fastener **252** as shown in **FIG. 34**. The assembly **1** is now ready for bone screw installation into the vertebra **16**.

[**0160**] The driver **14** is installed into the intermediate guide tool **10** and multi-purpose installation tool **12** assembly in steps similar to that described above with respect to the end guide tool **9**.

[**0161**] A series of bone screws **4** are installed in each vertebra **16** to be attached to the rod **8** by inserting each of the assemblies **1** through the skin incision **350** as shown in **FIG. 37**. The screw **4** is then rotated and driven into the tapped bore **380** with the surgeon holding and rotating the assembly **1** with the driver handle **250**, thereby rotating the entire assembly **1** as one unit until the shank **148** is disposed at a desired depth in the tapped bore **380** of the respective vertebra **16**. Preferably, the shank **148**, along with the screw driver **14** are also cannulated to receive the pin **355**, providing additional guidance for installation of the bone screw **4** into the vertebra **16**.

[**0162**] After a specific bone screw **4** is installed, the driver **14** is removed from either the guide tool **9** or **10** by rotating the fastener **252** in a counter-clockwise direction (illustrated by the arrow Z in **FIG. 33**) and sliding the shaft **254** towards the open end **230** of the multi-purpose installation tool **12**, if used, and pulling the driver **14** out of the assembly **1** by the handle **250**.

[**0163**] With respect to the end guide tools **9**, the multi-purpose installation tool **12**, if used, is then removed by rotating the translation nut **202** counter-clockwise until the thread **228** disposed on the inner surface **224** of the translation nut **202** is disengaged from the thread **50** of the tool **9**. The multi-purpose installation tool **12** is then slid off of the tool **9** deploying the flexible flap **38**, as shown in **FIG. 38**. If desired at this junction of a process according to the invention, the multi-purpose installation tool **12** many then be rotated 180 degrees and replaced on the tool **9** with the slot **44** and the channel openings **40** and **94** aligned adjacent to and facing the alignment block **218** of the multi-purpose installation tool **12** for a rod pushing application. The translation nut **202** is then rotated clockwise as illustrated by the arrow X in **FIG. 29**. In this rod pushing position, the flexible tang **38** is extendible into the U-shaped channel **212** of the multi-purpose installation tool **12**.

[**0164**] For each bone screw **4**, an associated guide tool **9** or **10** extends through the skin **14**, as illustrated in **FIG. 39**. An end guide tool **9** is located at each end of the series of bone screws **4** and an intermediate guide tool **10** is located on each intermediate bone screw **4**.

[**0165**] In order to install a rod **8** in two or more bone screws **4**, it may not be necessary to equip each guide tool **9** or **10** with a multi-purpose installation tool **12**. For example, with reference to **FIG. 40**, for a particular procedure, it may be desirable to utilize only one multi-purpose installation tool **12** with a tool set **2** according to the invention. In the process illustrated by the **FIG. 40**, the multi-purpose installation tools **12** have been removed from both of the end guide tools **9** and both of the intermediate guide tools **10** after which a rod **8** has been inserted and a multi-purpose tool **12** reattached to one tool **10**. Some pushing of the rod may be accomplished by just extending a rod or tool down the central channel of the guide tools **9** and **10** when mechanical advantage is not required to move the rod **8**. As required by the surgeon, one or more multi-purpose installation tools **12** may be added or removed at any time during the course of the rod pushing or reducing procedure.

[**0166**] With reference to **FIG. 39**, prior to installation of the rod **8**, the end guide tools **9** are turned or rotated so the channels **55** therein face one another and the intermediate guide tools **10** are aligned so the pass-through slots **111** align with the channels **55**.

[**0167**] With reference to **FIG. 40**, the rod **8** has been inserted diagonally through one of the end skin incisions **350** with the adjacent end guide **9** pushed to the side, so that one of the rod ends **59** first passes through the slots **111** in the intermediate guide tools **10** and then into the channel **55** of one of the guide tools **9**. Back muscle tissue separates easily here to allow the upper insertion of the rod **8** and can be further separated by finger separation or cutting through one of the incisions **350**, if required.

[**0168**] After initial insertion, the remaining opposed end **59** of the rod **8** is positioned in the channel **55** of the end guide tool **9** that is located next to the insertion point of the rod **8**. Manipulation of the rod **8** in the channels **55** is aided by the back wall tang portions or flexible flaps **38** of the guide tools **9** which may also be moved like a joy-stick toward or away from each other by the surgeon. Furthermore, once the rod **8** is disposed within the channels **111** and **55**, the back wall portions or flaps **38** resiliently bias against the rod ends **59**, substantially holding and containing the rod **8** in place between the end guide tools **9** of the tool set **2**. The reason that the tangs **38** are needed is that the rod **8** extends beyond the end bone screws **4** and the end guide tool **9** are located on the end bone screws **4**. Also, the rod may tend to slip out of one end screw head. When the rod is spaced above the bone screws **4**, the guide tools **9** can be manipulated to be spaced farther apart to receive the rod **8** therebetween, but as the rod **8** nears the bone screws **4**, the guide tools **9** can not be manipulated enough to compensate so the rod **8** must extend beyond the bodies of the guide tool **9**. Therefore, the tangs **38** allow the rod **8** to be controlled and positioned outwardly of the end bone screws **8**. Moreover, the position of the rod **8** is controlled by equal pressure applied by the tangs **38** so that the rod **8** extends past the bone screws **4** approximately an equal amount on each side.

[**0169**] Also with reference to **FIGS. 40 and 41**, once the rod **8** is positioned in the guide tools **9** and **10**, the multi-purpose installation tool **12** may be utilized to push the rod **8** toward the bone screw **4**, normally when mechanical advantage is needed to seat the rod **8** in the bone screws **4**. This is accomplished by rotating the translation nut **202** in a clockwise direction (as viewed from above the skin **20**),

thereby translating the sleeve **204** in a downward direction toward the bone screw **4**, with the guide tool alignment block **218** abutting and pushing against the rod **8**. It is also possible to reduce or realign vertebral bodies by this maneuver.

[**0170**] As shown in **FIG. 40**, it may also be desirable to simultaneously or thereafter push the rod **8** toward the screw **4** of one or more guide tools **9** and **10** utilizing the closure top installation tool **302** pushing against a closure top **62** that in turn pushes against the rod **8**. In particular, a closure top **62** is placed in the elongate top to bottom channel associated with the guide tools **9** and **10**, preferably by entry from the side such as into the channel opening **40** of the guide tool **9** or alternatively into the channel **39** through the top end **43** of the guide tool **9**. If the guide tool **9** or **10** has the multi-purpose installation tool **12** attached, the closure top **62** can be placed into the guide tool by side insertion into the U-shaped channel **212**. The closure top installation tool **302** is then inserted into the top end **43** and through the channels disposed within the guide tool **9**, until the engagement portion **304** mates with a cooperating aperture disposed in the break-off head **186**. The closure top **62** is then driven or pushed under manual control of the surgeon by use of the installation tool **145** toward the rod **4**.

[**0171**] With reference to **FIG. 42**, near the bottom of the guide tools **9** and **10**, such as near the end **112** of the intermediate tool **10** and the bottom **36** of the back wall **28** of end guide tool **9**, the closure top **62** engages the helically wound guide and advancement structures **64** and **114** of respective guide tools **9** and **10**. The tools **302** and mated closure tops **62** are then rotated, mating the closure tops **62** with associated guide tools **9** and **10** so as to drive the closure top **62** downward against the rod **8** and to urge the rod **8** downward into the bone screw channel **153**. Preferably, the translation nut **202** of the multi-purpose installation tool **12** is rotated in a clockwise direction, translating the sleeve **204** and block **218** downwardly slightly in advance or substantially concurrent with the advancement of the closure tops **62**, providing additional mechanical advantage for the block flat surface **222** against the rod **8**.

[**0172**] With reference to **FIG. 43**, at the bottom of the guide tool **9** or **10**, the closure top mating structure **181** engages and begins to mate with the guide and advancement structure **183** on the respective bone screw **4** and continued rotation of the tool **302** drives the rod **8** downward and into engagement with the upper part of the bone screw shank **154**, so as to snug against and frictionally lock the shank **148** in position relative to the bone screw head **146**.

[**0173**] Once all of the closure tops **62** are in final seated position in respective bone screws **4** and the surgeon is satisfied with the position of all of the elements, such as is illustrated in **FIG. 43**, any and all multi-purpose installation tools **12** are removed by rotating the nut **202** counter-clockwise followed by sliding the sleeve **204** off of the guide tool **9** and **10** and out of the incision **350**. Thereafter, each of the guide tools **9** and **10** are now removed by rotating each guide tools **9** and **10** ninety degrees so that the recesses **116** straddle the rod **8** to allow the attachment structure **72** or **124** to disengage from the receiver portion **145** on the bone screw **4**. The guide tool **9** or **10** is then pulled axially upward away from the bone screw **4**, along the tool **302** and then out of the incision **350**.

[**0174**] The antitorque tool **300** is mounted over each closure top installation tool **302**, utilizing the tool **302** as a guide for re-entry through the incision **350**. The antitorque tool **300** is slid along the tool **302** until the bridges **310** straddle the rod **8**, preventing axial rotation of the tool **300**. As shown in **FIG. 46**, the closure top installation tool **302** is then pulled axially upward away from the bone screw **4** and out of the incision **350**.

[**0175**] With reference to **FIG. 47**, the closure top torquing tool **305** is then inserted into the antitorque tool **300** and engaged with the break-off head **186**. By cooperative use of the tools **300** and **305** a preselected torque is manually applied to the break-off head **186** which breaks from the closure top **62** as illustrated in **FIG. 48** and is thereafter removed, followed by removal of the antitorque tool **300**, after which the incision **165** is closed.

[**0176**] With reference to **FIGS. 49-53**, an alternative attachment structure, generally **401**, is illustrated. A portion of the structure **401** is located on a polyaxial bone screw head or receiver **406** that is pivotally attached to a shank **407**. Shown in phantom in the illustrated embodiment, the threaded shank **407** is cannulated, having a small central bore **408** extending an entire length of the shank body. The bore **408** provides a passage through the shank interior for a length of wire or pin inserted into a vertebra prior to the insertion of the threaded shank body **407**, the wire or pin providing a guide for insertion of the shank **407** into the vertebra.

[**0177**] The attachment structure **401** for holding cooperation between the polyaxial bone screw head or receiver **406** and a guide tool **410** is also located at a lower end portion **411** of the guide tool **410**. The lower end portion **411** has a cutout **412** and an inner attachment ledge **413**. The attachment ledge **413** has a body **414** with an upperwardly extending, projection, flange or hook member **415** that follows an inner curvature of the guide tool **410**. The body **414** extends radially inwardly and is sized and shaped to mate with and set within a tool receiving recess or groove **418** formed on the bone screw head **406**. The recess **418** is sufficiently wide to simultaneously receive both the body **414** and the hook member **415** in a radially inward direction, as is shown in **FIG. 52**. The attachment **413** is then set by axially raising the guide tool **410** relative to the bone screw **406** so at least part of the hook member **415** is located in an upper hidden recess **420**, thereby securing the guide tool **410** to a respective bone screw **406**, as shown in **FIG. 53**. This locks the guide tool **410** to a respective bone screw **406** and prevents outward splaying of the guide tool **410**. This is a snap-on type installation or assembly as seen in **FIG. 49** where the leg **411** splays outward during initial placement of the guide tool **410** over the bone screw **406** and then returns to an unsplayed position when the inner attachment structure **413** seats in the receiving recess **418**, as shown in **FIG. 52**.

[**0178**] Alternatively, the guide tool **410** can be rotated approximately 90° about a rotational axis thereof prior to joining with a respective bone screw **406**, the attachment structure **413** lowered through the opening between bone screw arms **424** and **425** and aligned with the tool receiving recess **418**, after which the guide tool **410** is rotated back to the first position shown in **FIG. 53** in a twist on type assembly. In some instances the guide tool **410** is rotated somewhat more or less than ninety degrees to make the

necessary alignment for removal which depends on the specific construction of the parts.

[0179] To remove the guide tool **410** from the bone screw receiver **406**, the guide tool **410** is rotated ninety degrees to align the inner attachment ledge **413** with the opening between bone screw arms **424** and **425**, to allow the attachment structure **413** to disengage from the recess **418**. The guide tool **410** is then pulled axially upward away from the bone screw **406**.

[0180] With reference to **FIGS. 54-56**, a second alternative attachment structure, generally **430**, for holding attachment of a bone attachment structure and a guide tool is illustrated. A polyaxial bone screw head or receiver **434** with a pivotally attached bone screw shank **435** is shown cooperating with a guide tool **436** having a lower end portion **438** thereof. On the bone screw receiver **434**, the attachment structure **430** includes tool engaging apertures **440** formed on outer surfaces of arms **444** and **445** for holding the receiver **434** during procedures such as bone screw assembly, implantation of the shank **435** into a vertebra, and subsequent procedures, such as rod reduction and closure top installation. The illustrated apertures **440** are substantially circular in cross-section and are disposed opposite one another, each including an upwardly projecting, hidden inner recess **448** for cooperating with complimentary bone screw holding components of the guide tool **436**, discussed more fully below. It is noted that the apertures **440** and the cooperating guide tool holding components may be configured to be of a variety of sizes and locations for attachment to the guide tool along any of the surfaces of the arms **444** and **445**.

[0181] On the guide tool **436**, the attachment structure **430** is disposed at the lower portion **438** and on inner slightly recessed surfaces **452** and **453** of respective legs or surfaces **456** and **457**. The attachment structure **430** includes diametrically opposed projections or pins **460** and **462**, extending radially inwardly from the surfaces **452** and **453**, respectively. The pins **460** and **462** are substantially configured the same, both being substantially rounded, radially inward projecting nodules, each having a lip **464** projecting upwardly and away from a bottom surface **468** and **469**, respectively. Each lip **464** partially defines a groove **470** for receiving the bone screw receiver **434**. The groove **470** is further defined by a base surface **472** and a wall **474** that faces the inner surface **452** or **453**. An upper wall **476** is substantially parallel to the base or bottom surface **468** or **469**.

[0182] The pins **460** and **462** are configured to mate with the opposed apertures **440** of the bone screw head or receiver **434** with the lip **464** extending into the inner recess **448**, when the guide tool **436** is fully installed on the bone screw head **434** as shown in **FIG. 56** and described more fully below. While a preferred embodiment of the invention has pins **460** and **462** of the implant engaging structure **430** on the guide tool **436**, and apertures **440** on the bone screw head **434**, it is foreseen that these elements could be reversed in total or part in accordance with the invention.

[0183] In use, before implanting the bone screw shank **435** in a vertebra, the bone screw head or receiver **434** is preferably joined to the guide tool **436**. It is also possible to join the guide tool **436** to the bone screw receiver **434** after the installation of the bone screw to the vertebra. The cooperating implant engaging structure **430** disposed on the guide tool **436** and the head or receiver **434** is joined by first manually spreading the legs **456** and **457** apart and inserting the guide tool **436** onto the bone screw head **434** as illustrated in **FIG. 54**. The inwardly projecting pins **460** and **462** are generally aligned with the apertures **440** and the tool is slid downwardly along the head **434** surface until the pins **460** and **462** snap into the apertures **440** as shown in **FIG. 55**. With reference to **FIG. 56**, the guide tool **435** is then pulled upwardly and away from the bone screw head **434**, causing the lips **464** to enter the recesses **448**. Engagement between the lips **464** and the structure defining the recesses **448** result in a firm attachment that also resists any attempt to spread or splay the legs **456** and **457**.

[0184] To remove the guide tool **436** from the bone screw head **434**, downward force is first placed on the guide tool **436** by the surgeon to move the lips **464** of the guide tool implant engaging structure **430** out of the inner recesses **448** of the bone screw head **434**. Then a prying tool may be inserted between the legs **456** and **457** to spread the lower portions of the legs **456** and **457** away from one another, while pulling up on the guide tool **436** to allow the guide tool to slide upwardly along the bone screw head **434** (as illustrated in reverse by **FIGS. 56, 55** and **54**). The guide tool **436** is then pulled axially upwardly away from the bone screw head **434**.

[0185] With reference to **FIGS. 57-59**, a third alternative attachment structure, generally **480**, for holding a bone attachment, such as the bone screw, generally **482**, to a guide or holding tool **484** is illustrated. The illustrated bone screw **482** includes a head or receiver **486** hingedly attached to a bone screw shank **487**. With reference to **FIG. 57**, the shank **487** is bottom loaded into the receiver **486** and then rotated ninety degrees to seat an upper portion **489** of the shank **487** within the receiver **486** as shown in **FIG. 59**. First and second arms **490** and **492** of the receiver **486** each include outer substantially planar surfaces **494**. Each outer surface **494** of each arm **490** and **492** also includes a substantially V-shaped undercut **496** disposed near and running parallel to a top surface **498**, the undercut **496** extending along and through end surfaces **497** of the receiver **486** and sized and shaped for cooperating with complimentary bone screw holding components of the guide tool **484**. The under cut **496** includes a planar surface **500** disposed at an acute angle with respect to a second surface **501**, the surface **501** being perpendicular to the top surface **498**.

[0186] On the guide tool **484**, the attachment structure **480** includes diametrically opposed projections in the form of straight, hook-like ledges **502** extending along inner surfaces of the tool **484** and projecting inwardly and upwardly (operably in a direction away from the bone screw **482** and toward a remainder of the tool **484**). The hook-like ledges **502** are sized and shaped to be received in the undercut **496** and be in frictional engagement with the angled surfaces **500**. First and second set screws **504** rotatably attached to the guide tool **484** are sized and shaped for frictional engagement with the top surface **498** of the receiver arms **490** and **492**, respectively, thereby frictionally fixing the projecting ledges **502** within the undercut **496**.

[0187] In use, before implanting the bone screw shank **487** in a vertebra, the bone screw head or receiver **486** is preferably joined to the guide tool **484**. It is also possible to

join the guide tool **484** to the bone screw receiver **486** after the installation of the bone screw to the vertebra. The cooperating implant engaging structure **480** disposed on the guide tool **484** and the head or receiver **486** may be joined in more than one way. One option is to manually spread opposed legs or portions **506** and insert the guide tool **484** onto the bone screw receiver **486** outer arm surface **494** at a location spaced from the top surfaces **498**, thereby snapping the guide tool **484** onto the receiver **486** and thereafter pulling the guide tool **484** upwardly and away from the receiver **486**, the guide tool **484** sliding upwardly along an inwardly sloping surface **507** leading up to the undercut **496** until the ledges **502** are received in the undercut **496**. Engagement between the ledges **502** and the sloped surfaces **500** result in a firm attachment that also resists any attempt to spread or splay the legs **506**. The set screws **504** may then be rotated and thereby moved into frictional engagement with the top surfaces **498**.

[**0188**] Alternatively, the implant engaging structure **480** on the guide tool **484** may be aligned with the undercut **496** on the receiver **486**, the tool **484** disposed laterally of the bone screw receiver **486**. Then the tool **484** may be slid onto the bone screw receiver **486** with the ledges **502** in sliding engagement in the surfaces **500** of the undercuts **496** until the ledges **502** are fully received in the undercuts **496**. To fully engage the ledges **502** with the surfaces **500**, the guide tool **484** is pulled upwardly and away from the receiver **486**. The set screws **504** may then be rotated and placed in frictional engagement with the top surfaces **498**.

[**0189**] To remove the guide tool **484** from the bone screw head **434**, the set screws **504** are first rotated until the screws **504** are spaced from the top surfaces **498**. Downward force is then placed on the guide tool **484** by the surgeon to move the ledges **502** of the guide tool implant engaging structure **480** slightly out of the undercut **496**. Then the guide tool **484** is slid in a lateral direction, out of the undercut **496**.

[**0190**] It is to be understood that while certain forms of the present invention have been illustrated and described herein, it is not to be limited to the specific forms or arrangement of parts described and shown. For example, it is foreseen that more than one tool could be used to provide the described functions for the multi-purpose installation tool **12**. It is also possible to use the invention in an open surgical wound. Different types of screw drivers, both cannulated and non-cannulated, can be used with the invention.

What is claimed and desired to be secured by Letters Patent is as follows:

1. In the combination of a bone attachment structure having a receiver and a tool having receiver attachment structure at a lower end thereof that is operably mateable with the receiver; the improvement comprising:

a) the receiver having a top, a bottom, and an undercut first surface projecting downwardly toward the bottom;

b) the tool lower end having a projection with a second surface for mechanical overlapping and interlocking mating with the first surface; and

c) the first and second surfaces being sized, shaped and positioned to provide for anti-splay arrangement of the tool with respect to the receiver when the second surface is aligned with the undercut first surface of the receiver.

2. The improvement of claim 1 wherein at least one of the first and second surfaces are planar.

3. The improvement of claim 1 wherein at least one of the first and second surfaces are curved.

4. The improvement of claim 1 wherein the first and second surfaces are sized, shaped and positioned to provide for mating by alignment and sliding movement of the tool relative to the receiver and disassembly by reversing the sliding movement of the tool relative to the receiver, such that the tool has a slide on and slide off relationship with the receiver.

5. The improvement of claim 4 wherein the receiver has a curved surface such that the tool has a twist on and twist off relationship with the receiver.

6. The improvement of claim 1 wherein the first and second surfaces are sized, shaped and positioned to provide for mating by splaying the tool about the receiver for attachment of the tool to the receiver and disassembly by sliding movement of the tool relative to the receiver, such that the tool has a snap on and slide off relationship with the receiver.

7. The improvement of claim 6 wherein the receiver has a curved surface such that the tool has a snap on and twist off relationship with the receiver.

8. The improvement of claim 1 wherein the first and second surfaces are sized, shaped and positioned to provide for mating by splaying the tool about the receiver followed by sliding the first and second surfaces into engagement and disassembly by sliding movement of the tool relative to the receiver, followed by splaying of the tool, such that the tool has a snap on and pry off relationship with the receiver.

9. In the combination of a bone attachment structure having a receiver and a guide tool having receiver attachment structure at a lower end thereof that is operably mateable with the receiver, the improvement comprising:

a) the receiver having an aperture and a recess communicating with the aperture; and

b) the guide tool lower end having an inner projection, the projection having mating structure receivable in the recess for operably resisting radial splaying and separation of the tool from the receiver when joined together.

10. In the combination of a bone screw having a head and a manipulation tool having attachment structure at a lower end thereof that is operably mateable with the bone screw head; the improvement comprising:

a) the bone screw head having a top, a bottom, and a circumferentially extending undercut first surface facing downwardly toward said bottom;

b) the manipulation tool lower end having a projection with a circumferentially extending second surface; and

c) the first and second surfaces being sized, shaped and positioned to provide for operable mating overlapping alignment of the manipulation tool relative to the bone screw head.

11. The improvement of claim 10 wherein:

a) the undercut first surface includes a recess and the projection includes extending second surface mating structure that overlaps with the undercut surface in the recess so as to operably resist splaying and separation

of the manipulation tool from the receiver when joined together.

12. In a medical implant having a head, the improvement wherein the head has an outer surface defining an aperture communicating with an undercut disposed in the head, the undercut adapted to receive a manipulation tool structure.

* * * * *