US010898233B2

(12) **United States Patent**
Jackson et al.

(10) **Patent No.: US 10,898,233 B2**
(45) **Date of Patent: Jan. 26, 2021**

(54) **MEDICAL IMPLANT RECEIVERS HAVING DUAL LEAD IN CLOSURE MATING THREAD FORMS AND CURVATE EXTENDING INSTRUMENT ENGAGING GROOVES**

(71) Applicant: **Roger P. Jackson**, Prairie Village, KS (US)

(72) Inventors: **Roger P. Jackson**, Prairie Village, KS (US); **James L. Surber**, Kansas City, KS (US)

(73) Assignee: **Roger P. Jackson**, Prairie Village, KS (US)

(*) Notice: Subject to any disclaimer, the term of this patent is extended or adjusted under 35 U.S.C. 154(b) by 0 days.

(21) Appl. No.: **16/779,304**

(22) Filed: **Jan. 31, 2020**

(65) **Prior Publication Data**

US 2020/0163702 A1 May 28, 2020

Related U.S. Application Data

(63) Continuation of application No. 15/964,502, filed on Apr. 27, 2018, now Pat. No. 10,548,641, which is a continuation of application No. 15/469,076, filed on Mar. 24, 2017, now Pat. No. 9,956,004, which is a continuation of application No. 14/566,356, filed on Dec. 10, 2014, now Pat. No. 9,636,146, which is a

(Continued)

(51) **Int. Cl.**

A61B 17/70	(2006.01)
A61B 17/86	(2006.01)
A61B 90/00	(2016.01)

(52) **U.S. Cl.**
CPC ***A61B 17/7035*** (2013.01); ***A61B 17/7032*** (2013.01); ***A61B 17/863*** (2013.01); ***A61B 17/8665*** (2013.01); ***A61B 17/8685*** (2013.01); *A61B 2017/8655* (2013.01); *A61B 2090/037* (2016.02)

(58) **Field of Classification Search**
CPC A61B 17/7035; A61B 17/7032; A61B 17/863; A61B 17/84; A61B 17/8665; A61B 17/8685; A61B 2090/037; A61B 2017/08655
USPC 606/265, 266, 270, 273, 275, 315
See application file for complete search history.

(56) **References Cited**

U.S. PATENT DOCUMENTS

447,775	A	3/1891	Higbee
1,300,275	A	4/1919	Johnson

(Continued)

FOREIGN PATENT DOCUMENTS

DE	20207850	U1	10/2002
EP	1316294	A2	6/2003

(Continued)

Primary Examiner — Eduardo C Robert
Assistant Examiner — David C Comstock
(74) *Attorney, Agent, or Firm* — Polsinelli PC

(57) **ABSTRACT**

An open implant closure structure includes a helically wound guide and advancement structure having at least two helically wound forms thereon providing a multi-start closing mechanism for use between spaced arms of a cooperating open medical implant having mating helically wound structure thereon. Illustrated structures include interlocking flange forms, v-threads, square threads, reverse angle threads and buttress threads and receivers with break-off extensions and cooperating tooling.

20 Claims, 19 Drawing Sheets

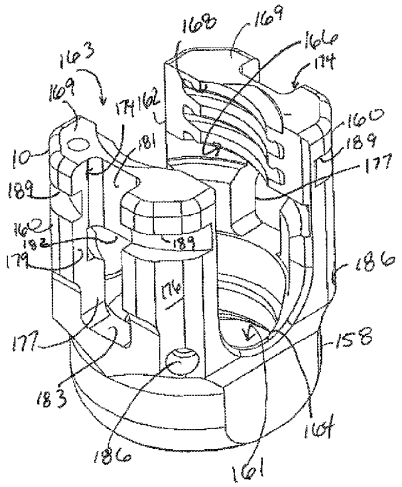

Related U.S. Application Data

continuation of application No. 13/694,849, filed on Jan. 10, 2013, now Pat. No. 8,911,479.

(60) Provisional application No. 61/631,746, filed on Jan. 10, 2012, provisional application No. 61/634,361, filed on Feb. 28, 2012.

(56) **References Cited**

U.S. PATENT DOCUMENTS

2,005,348	A	6/1935	Michell
2,244,046	A	6/1941	Bradshaw
2,631,635	A	3/1953	Klooz
2,833,325	A	5/1958	Laisy
2,927,332	A	3/1960	Moore
3,419,058	A	12/1968	Walker
3,664,440	A	5/1972	Elenburg
3,963,304	A	6/1976	Suzuki
3,963,322	A	6/1976	Gryctko
3,977,221	A	8/1976	Foote
3,990,671	A	9/1976	Seyler
4,141,752	A	2/1979	Shipko
4,199,216	A	4/1980	Gryctko
4,210,374	A	7/1980	Churla
4,304,424	A	12/1981	Hansen
4,472,005	A	9/1984	Norton
4,492,500	A	1/1985	Ewing
4,528,874	A	7/1985	Dunn
4,538,947	A	9/1985	Burkholder
4,600,225	A	7/1986	Blose
4,627,759	A	12/1986	Kato
4,720,082	A	1/1988	Yang
4,764,068	A	8/1988	Crispell
D309,664	S	7/1990	McGrane
5,005,562	A	4/1991	Cotrel
5,009,539	A	4/1991	Muellenberg
5,024,213	A	6/1991	Asher et al.
5,025,676	A	6/1991	Perretta
5,048,155	A	9/1991	Hwang
5,067,955	A	11/1991	Cotrel
5,073,074	A	12/1991	Corrigan et al.
5,092,635	A	3/1992	DeLange et al.
5,129,388	A	7/1992	Vignaud et al.
5,129,900	A	7/1992	Asher et al.
5,171,279	A	12/1992	Mathews
5,201,678	A	4/1993	Venezia
5,217,497	A	6/1993	Mehdian
5,234,430	A	8/1993	Huebner
5,244,323	A	9/1993	Tucchio
5,257,993	A	11/1993	Asher et al.
D346,150	S	4/1994	Triantopoulos
5,334,203	A	8/1994	Wagner
5,366,330	A	11/1994	Cosenza
5,431,651	A	7/1995	Goble
5,443,467	A	8/1995	Biedermann et al.
5,474,555	A	12/1995	Puno et al.
5,476,464	A	12/1995	Metz-Stavenhagen et al.
5,487,744	A	1/1996	Howland
5,496,321	A	3/1996	Puno et al.
5,520,454	A	5/1996	Laing
5,533,912	A	9/1996	Fillinger
5,605,458	A	2/1997	Bailey et al.
5,607,304	A	3/1997	Bailey et al.
5,628,740	A	5/1997	Mullane
5,662,650	A	9/1997	Bailey et al.
5,667,508	A	9/1997	Errico et al.
5,669,911	A	9/1997	Errico et al.
5,672,176	A	9/1997	Biedermann et al.
5,697,929	A	12/1997	Mellinger
5,727,314	A	3/1998	Ashcraft
5,733,286	A	3/1998	Errico et al.
5,752,957	A	5/1998	Ralph et al.
5,776,134	A	7/1998	Howland
5,782,833	A	7/1998	Haider
5,797,911	A	8/1998	Sherman et al.
5,848,913	A	12/1998	Ashcraft
5,870,934	A	2/1999	Cullinan
5,879,350	A	3/1999	Sherman et al.
5,882,350	A	3/1999	Ralph et al.
5,885,286	A	3/1999	Sherman et al.
5,941,885	A	8/1999	Jackson
5,954,725	A	9/1999	Sherman et al.
5,961,517	A	10/1999	Biedermann et al.
5,964,760	A	10/1999	Richelsoph
6,004,349	A	12/1999	Jackson
6,006,930	A	12/1999	Dreyer et al.
6,010,502	A	1/2000	Bagby
6,010,503	A	1/2000	Richelsoph et al.
6,053,917	A	4/2000	Sherman et al.
6,056,753	A	5/2000	Jackson
6,059,786	A	5/2000	Jackson
6,063,090	A	5/2000	Schlapfer
6,074,147	A	6/2000	Shu
6,074,391	A	6/2000	Metz-Stavenhagen et al.
6,076,437	A	6/2000	Saint Martin
6,077,262	A	6/2000	Schlapfer et al.
6,077,267	A	6/2000	Huene
6,102,913	A	8/2000	Jackson
6,110,172	A	8/2000	Jackson
6,113,601	A	9/2000	Tatar
6,135,321	A	10/2000	Hippensteel
6,146,383	A	11/2000	Studer et al.
6,158,996	A	12/2000	Becher
6,179,841	B1	1/2001	Jackson
6,193,719	B1	2/2001	Gournay
6,209,575	B1	4/2001	Graziano
6,224,596	B1	5/2001	Jackson
6,224,598	B1	5/2001	Jackson
6,248,105	B1	6/2001	Schlapfer et al.
6,254,146	B1	7/2001	Church
6,261,288	B1	7/2001	Jackson
6,280,442	B1	8/2001	Barker et al.
6,296,642	B1	10/2001	Morrison et al.
6,302,888	B1	10/2001	Mellinger
6,355,040	B1	3/2002	Richelsoph et al.
6,361,535	B2	3/2002	Jackson
6,371,957	B1	4/2002	Amrein et al.
6,412,831	B1	7/2002	Noel et al.
6,440,137	B1	8/2002	Horvath et al.
6,443,953	B1	9/2002	Perra et al.
6,454,768	B1	9/2002	Jackson
6,454,772	B1	9/2002	Jackson
6,471,705	B1	10/2002	Biedermann et al.
6,478,795	B1	11/2002	Gournay
6,485,491	B1	11/2002	Farris et al.
6,488,681	B2	12/2002	Martin et al.
6,520,962	B1	2/2003	Taylor et al.
6,550,959	B2	4/2003	Huber
6,554,834	B1	4/2003	Crozet et al.
6,565,565	B1	5/2003	Yuan et al.
6,634,246	B2	10/2003	Ohya
6,634,842	B2	10/2003	Ueno
6,688,921	B2	2/2004	Borgstrom
6,699,248	B2	3/2004	Jackson
6,730,089	B2	5/2004	Jackson
6,764,354	B2	7/2004	Kaine
6,783,527	B2	8/2004	Drewry et al.
6,786,903	B2	9/2004	Lin
6,788,756	B2	9/2004	Erbes
6,817,910	B2	11/2004	Borgstrom
6,835,196	B2	12/2004	Biedermann et al.
6,837,889	B2	1/2005	Shluzas
6,843,791	B2	1/2005	Serhan
6,851,337	B2	2/2005	Stokes
6,899,714	B2	5/2005	Vaughan
6,997,927	B2	2/2006	Jackson
7,087,057	B2	8/2006	Konieczynski
7,096,071	B2	8/2006	Ollivier
7,141,051	B2	11/2006	Janowski
7,204,838	B2	4/2007	Jackson
7,223,268	B2	5/2007	Biedermann
7,232,104	B2	6/2007	Krapels
7,247,020	B2	7/2007	Takahashi
7,250,052	B2	7/2007	Landry et al.

(56) **References Cited**

U.S. PATENT DOCUMENTS

7,311,563 B2 12/2007 Siebens
7,320,570 B2 1/2008 Czarnek
7,334,307 B1 2/2008 Helenowski
7,490,394 B2 2/2009 Zakrzewski
7,515,220 B2 4/2009 Ko et al.
7,566,163 B2 7/2009 Inoue
7,591,839 B2 9/2009 Biedermann et al.
7,604,655 B2 10/2009 Warnick
7,641,674 B2 1/2010 Young
7,662,172 B2 2/2010 Warnick
7,686,835 B2 3/2010 Warnick
7,717,942 B2 5/2010 Schumacher
7,717,943 B2 5/2010 Kirschman
7,766,945 B2 8/2010 Nilsson et al.
7,794,477 B2 9/2010 Melkent et al.
7,857,834 B2 12/2010 Boschert
7,972,364 B2 7/2011 Biedermann et al.
8,092,494 B2 1/2012 Butler et al.
8,162,989 B2 4/2012 Khalili
8,377,100 B2 2/2013 Jackson
8,382,809 B2 2/2013 Kaufman et al.
8,439,922 B1 5/2013 Arnold et al.
8,801,761 B2 8/2014 Kirschman
8,814,913 B2 8/2014 Jackson
8,828,060 B2 9/2014 Biedermann et al.
8,911,479 B2 12/2014 Jackson et al.
8,998,956 B2 4/2015 George
9,068,587 B2 6/2015 Sage et al.
9,445,847 B2 9/2016 Biedermann et al.
9,636,146 B2 5/2017 Jackson et al.
9,717,533 B2 8/2017 Jackson et al.
9,743,957 B2 8/2017 Jackson
9,861,394 B2 1/2018 Jackson
10,004,541 B1 6/2018 Jackson
10,206,716 B2 2/2019 Jackson et al.
2001/0047208 A1 11/2001 Michelson
2002/0035366 A1 3/2002 Walder et al.
2002/0120272 A1 8/2002 Yuan
2002/0133154 A1 9/2002 Saint Martin
2002/0143341 A1 10/2002 Biedermann et al.
2002/0173791 A1 11/2002 Howland
2003/0014054 A1 1/2003 Huebner
2003/0023243 A1 1/2003 Biedermann et al.
2003/0088248 A1* 5/2003 Reed A61B 17/7041 606/308
2003/0100896 A1* 5/2003 Biedermann F16B 43/02 606/305
2003/0100904 A1 5/2003 Biedermann
2003/0114852 A1 6/2003 Biedermann et al.
2003/0125741 A1 7/2003 Biedermann et al.
2003/0149431 A1 8/2003 Varieur et al.
2003/0153913 A1 8/2003 Altarac et al.
2003/0158552 A1 8/2003 Jeon et al.
2003/0187433 A1 10/2003 Lin
2003/0199873 A1 10/2003 Richelsoph
2004/0039383 A1 2/2004 Jackson
2004/0049196 A1 3/2004 Jackson
2004/0138660 A1 7/2004 Serhan
2004/0138662 A1 7/2004 Landry et al.
2004/0143265 A1 7/2004 Landry
2004/0147929 A1 7/2004 Biedermann et al.
2004/0153068 A1 8/2004 Janowski et al.
2004/0167524 A1 8/2004 Jackson
2004/0167525 A1 8/2004 Jackson
2004/0172032 A1 9/2004 Jackson
2004/0176766 A1 9/2004 Shluzas
2004/0186474 A1 9/2004 Matthis et al.
2004/0260283 A1 12/2004 Wu et al.
2005/0131421 A1 6/2005 Anderson et al.
2005/0182410 A1 8/2005 Jackson
2005/0216003 A1 9/2005 Biedermann et al.
2005/0277928 A1* 12/2005 Boschert A61B 17/7037 606/328
2005/0283157 A1 12/2005 Coates et al.
2006/0009773 A1 1/2006 Jackson
2006/0036244 A1 2/2006 Spitler et al.
2006/0079893 A1 4/2006 Jackson
2006/0083603 A1 4/2006 Jackson
2006/0089643 A1 4/2006 Mujwid
2006/0155278 A1 7/2006 Warnick
2007/0043357 A1 2/2007 Kirschman
2007/0093827 A1 4/2007 Warnick
2007/0123862 A1 5/2007 Warnick
2007/0123867 A1 5/2007 Kirschman
2007/0208344 A1 9/2007 Young
2007/0219554 A1 9/2007 Landry et al.
2007/0260246 A1 11/2007 Biedermann
2007/0270832 A1 11/2007 Moore
2008/0015596 A1* 1/2008 Whipple ..... A61B 17/8685 606/86 A
2008/0039848 A1 2/2008 Jackson
2008/0045953 A1* 2/2008 Garamszegi ..... A61B 17/7032 606/86 A
2008/0071277 A1 3/2008 Warnick
2008/0086131 A1 4/2008 Daly et al.
2008/0097457 A1 4/2008 Warnick
2008/0167689 A1 7/2008 Matthis et al.
2008/0215100 A1 9/2008 Matthis et al.
2008/0249576 A1 10/2008 Hawkes et al.
2008/0269809 A1 10/2008 Garamszegi
2008/0292429 A1 11/2008 Hasenbohler et al.
2009/0093844 A1 4/2009 Jackson
2009/0138052 A1 5/2009 Biedermann et al.
2009/0221879 A1* 9/2009 Gorek A61B 17/708 600/214
2010/0004692 A1* 1/2010 Biedermann A61B 17/7098 606/305
2010/0036417 A1* 2/2010 James A61B 17/8605 606/246
2010/0057126 A1 3/2010 Hestad
2010/0125302 A1* 5/2010 Hammill, Sr. A61B 17/7038 606/308
2010/0174319 A1 7/2010 Jackson
2011/0152947 A1* 6/2011 Kirschman A61B 17/8665 606/302
2011/0208248 A1* 8/2011 Barrus A61B 17/7037 606/305
2011/0270321 A1 11/2011 Prevost et al.
2012/0029578 A1* 2/2012 Suh A61B 17/864 606/309
2013/0013003 A1 1/2013 Carbone et al.
2014/0052187 A1 2/2014 McBride et al.
2014/0081334 A1 3/2014 Jackson
2014/0142633 A1 5/2014 Jackson et al.
2014/0214097 A1 7/2014 Jackson et al.
2015/0119942 A1 4/2015 Jackson et al.
2015/0148846 A1 5/2015 Jackson
2015/0164558 A1 6/2015 Jackson et al.
2016/0038188 A1 2/2016 Jackson et al.
2016/0242818 A1 8/2016 Jackson
2017/0189073 A1 7/2017 Jackson et al.
2017/0333083 A1 11/2017 Jackson et al.
2017/0354441 A1 12/2017 Jackson et al.
2017/0354443 A1 12/2017 Jackson
2018/0243013 A1 8/2018 Jackson et al.
2018/0296249 A1 10/2018 Jackson
2019/0175225 A1 6/2019 Jackson et al.
2019/0231400 A1 8/2019 Jackson et al.
2019/0274734 A1 9/2019 Jackson et al.
2019/0298415 A1 10/2019 Jackson et al.
2020/0179014 A1 6/2020 Jackson

FOREIGN PATENT DOCUMENTS

EP 1570796 A1 9/2005
GB 2140523 A 11/1984
WO WO 95/13755 5/1995
WO WO 02/076314 10/2002

* cited by examiner

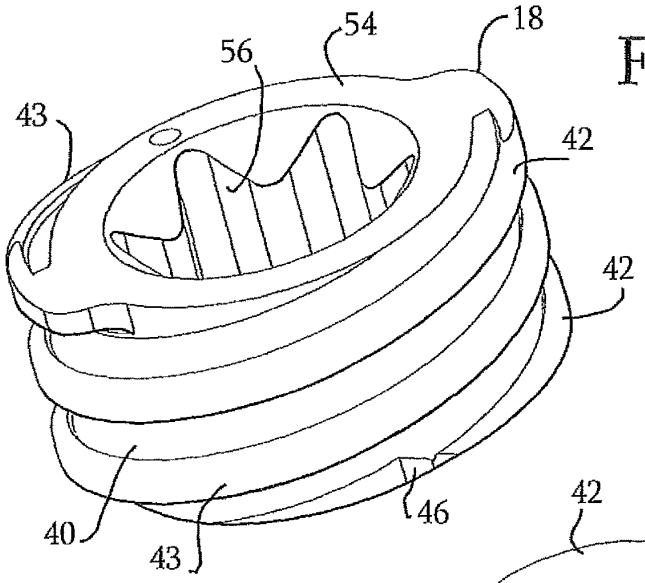

Fig. 1.

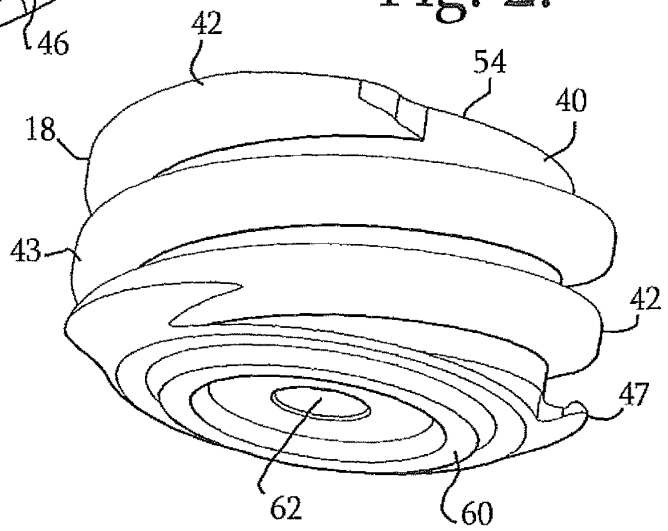

Fig. 2.

Fig. 3.

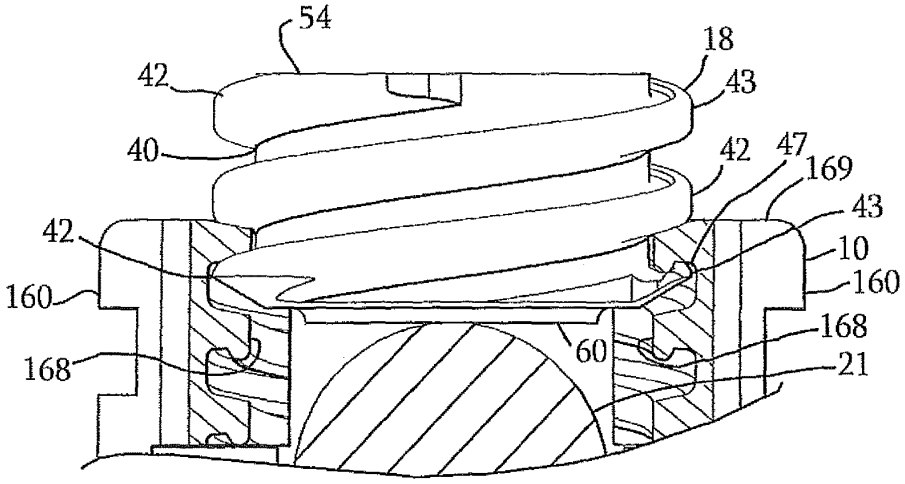

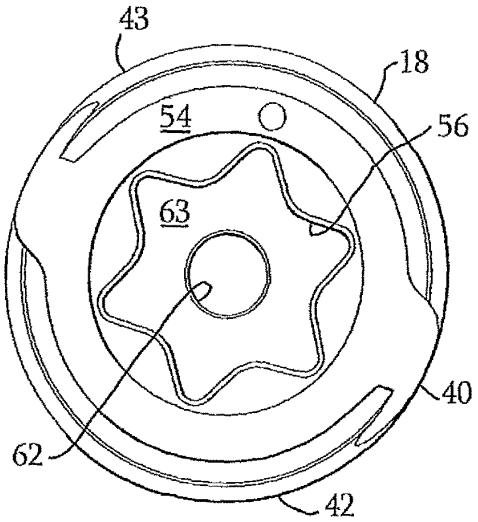

Fig. 4.

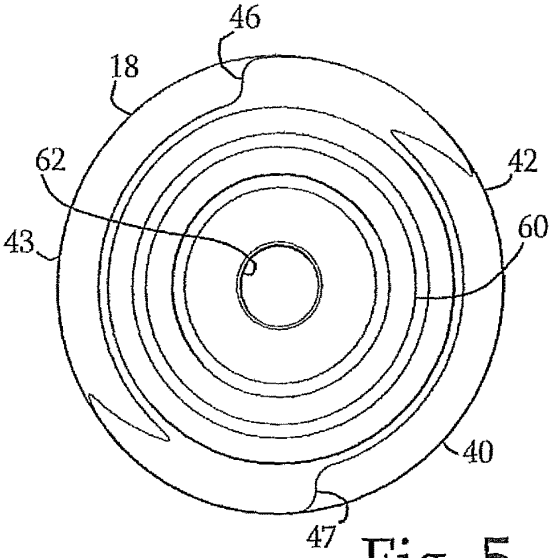

Fig. 5.

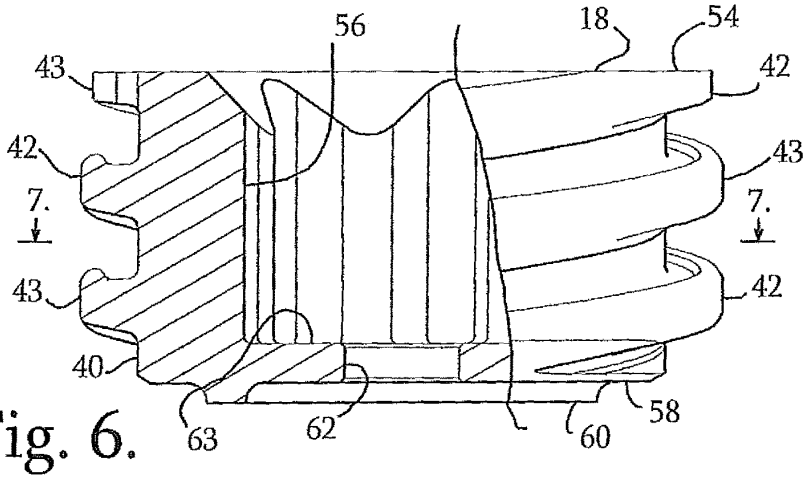

Fig. 6.

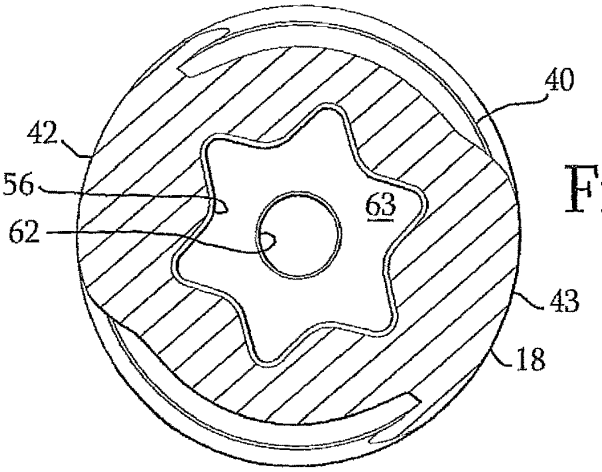

Fig. 7.

Fig. 8.

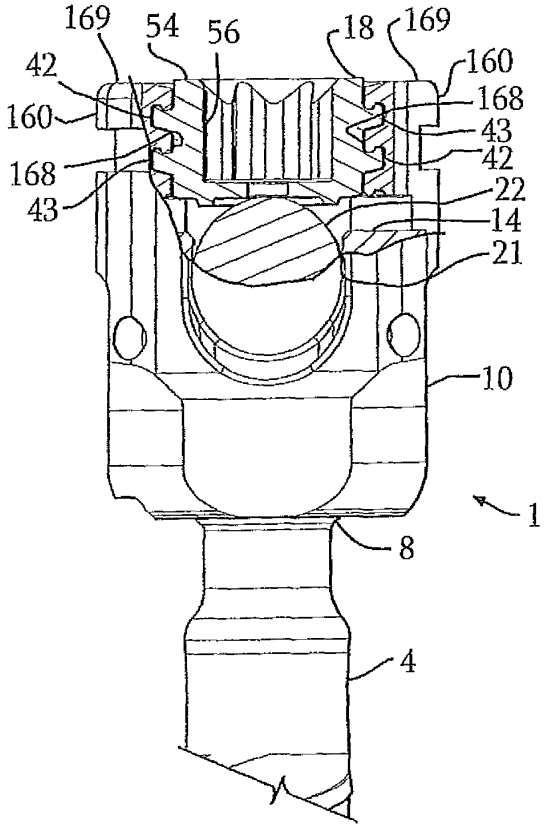

Fig. 9.

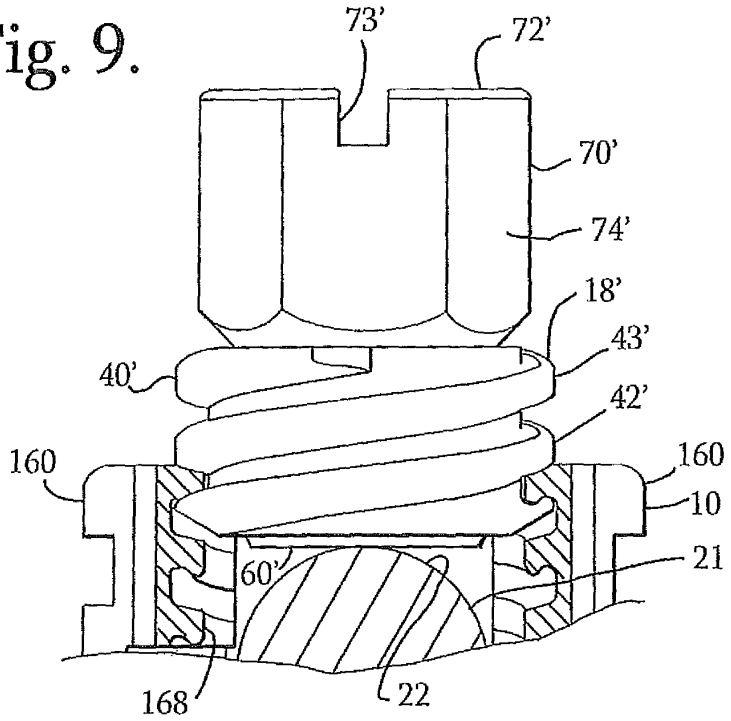
73'
72'
70'
74'
18'
43'
40'
42'
160
160
10
21
60'
168
22

Fig. 10.

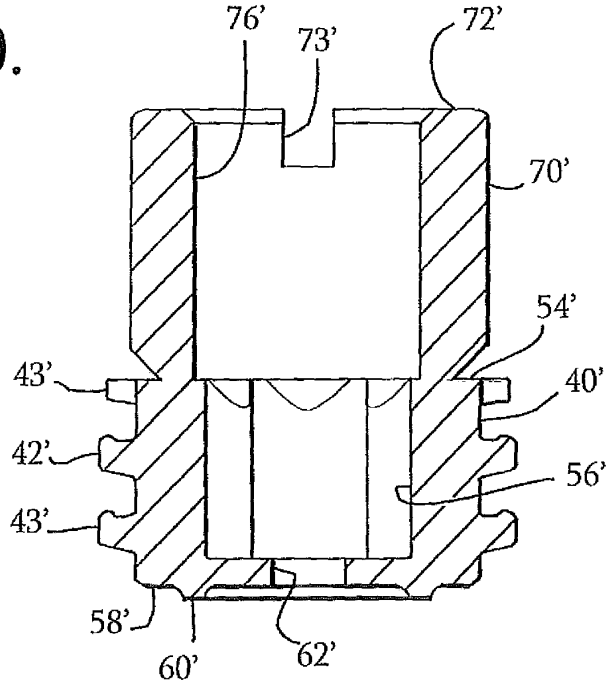
76'
73'
72'
70'
54'
43'
40'
42'
56'
43'
58'
60'
62'

Fig. 11.

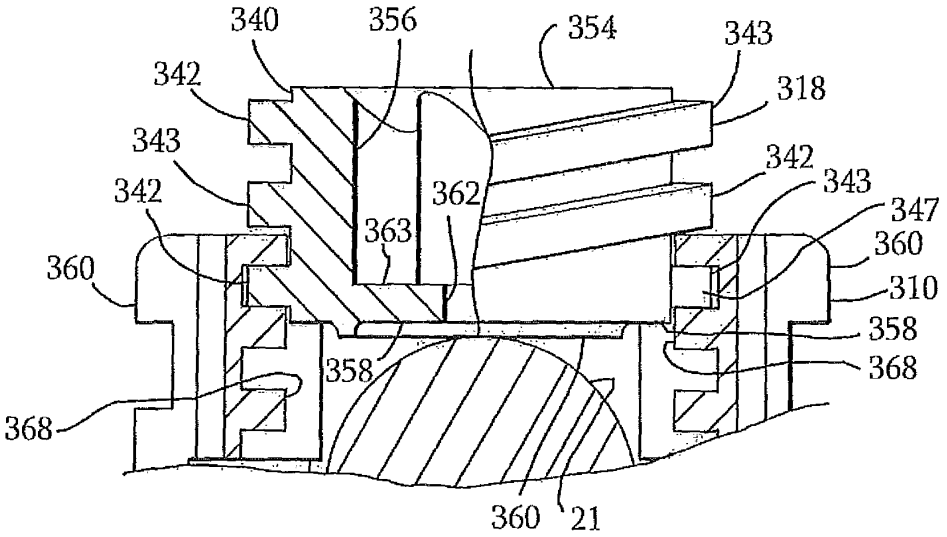
340
356
354
343
342
318
343
342
342
343
362
347
363
360
360
310
358
358
368
368
360
21

Fig. 12.

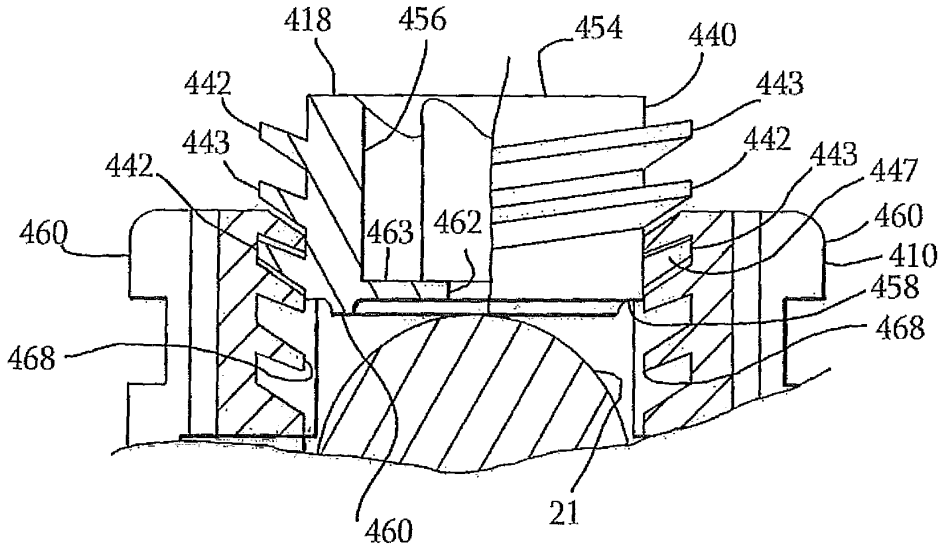
418
456
454
440
442
443
443
442
442
443
447
460
463
462
460
410
458
468
468
460
21

Fig. 13.

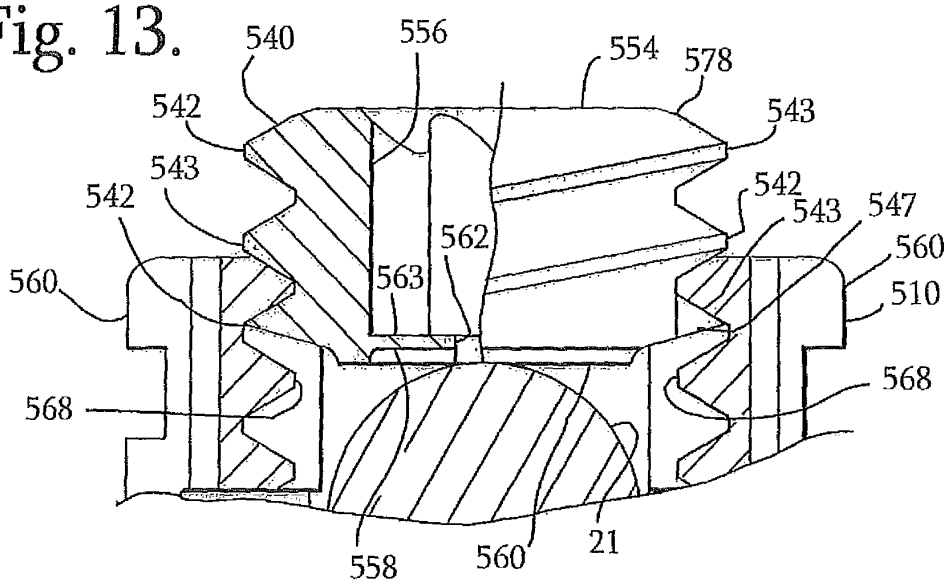
540
556
554
578
542
543
543
542
542
543
547
562
560
563
560
510
568
568
558
560
21

Fig. 14.

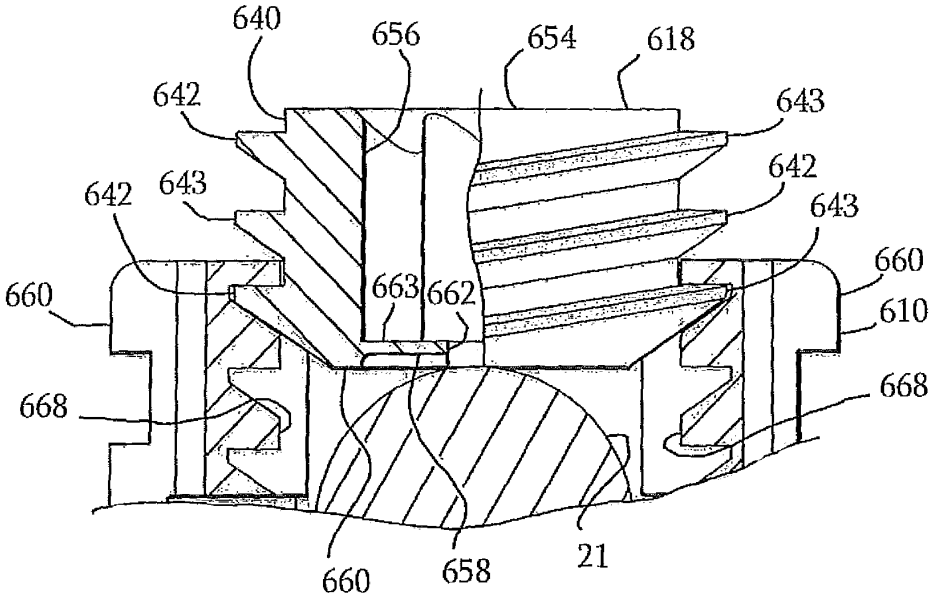
640
656
654
618
642
643
642
643
642
643
660
660
663
662
610
668
668
660
658
21

Fig. 15.

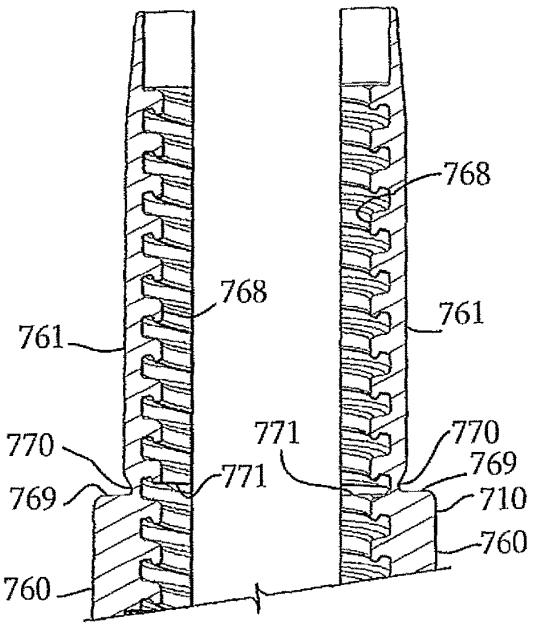

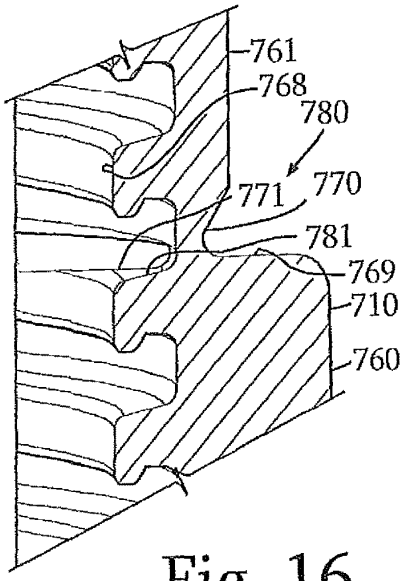

Fig. 16.

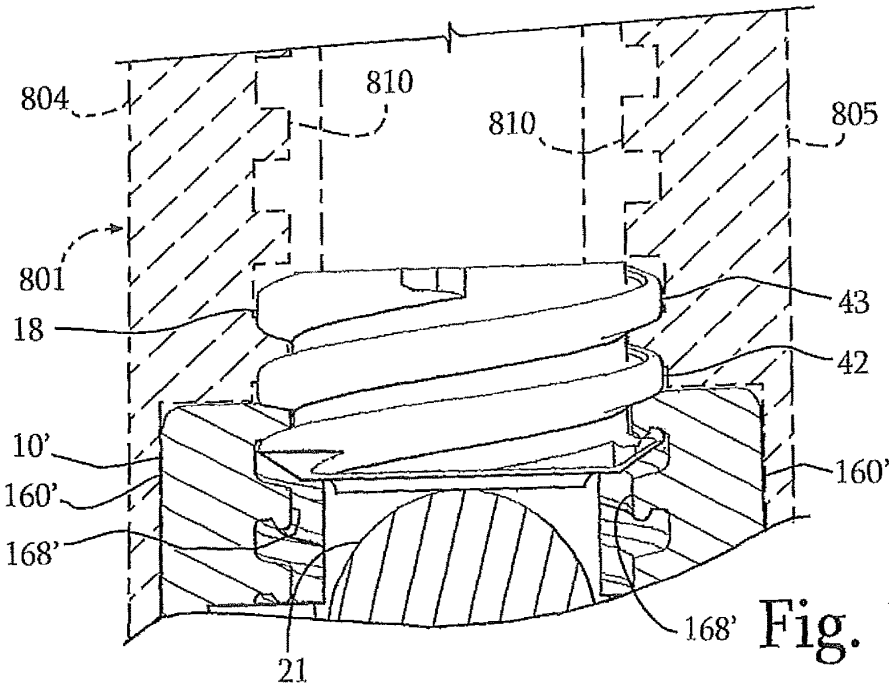

Fig. 17.

Fig. 18.

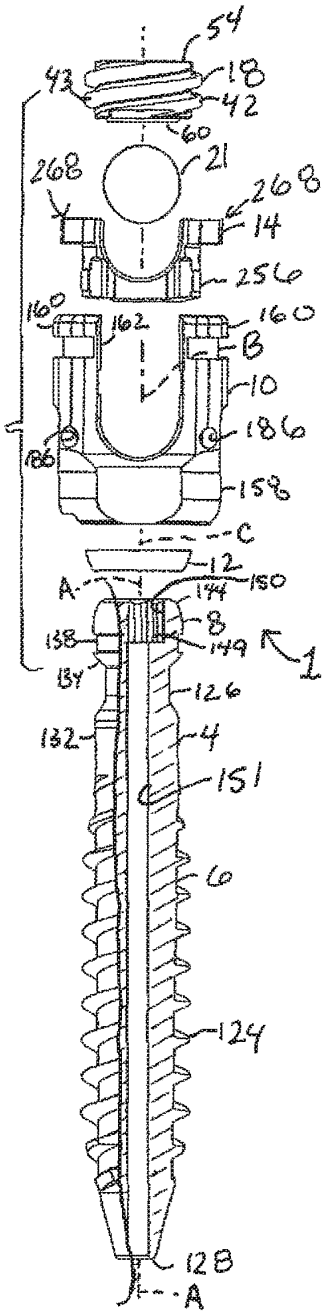

Fig. 19.

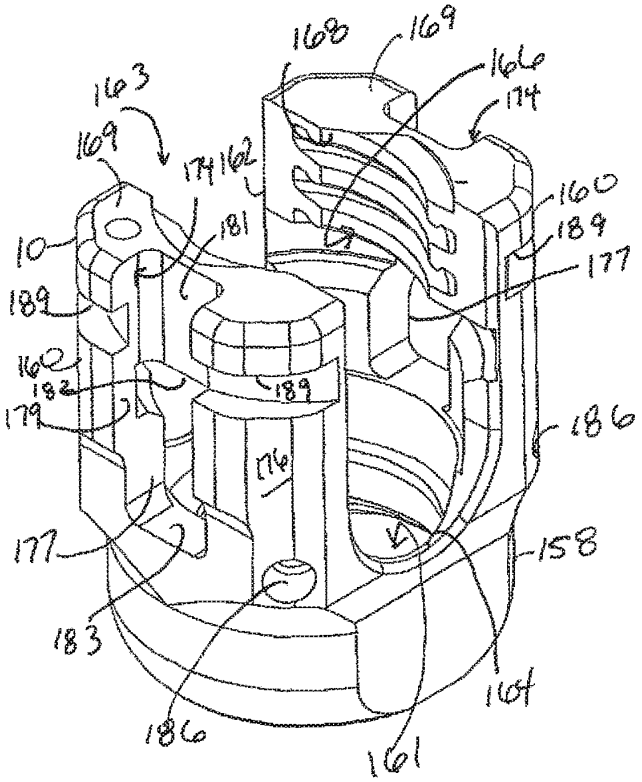

Fig. 20.

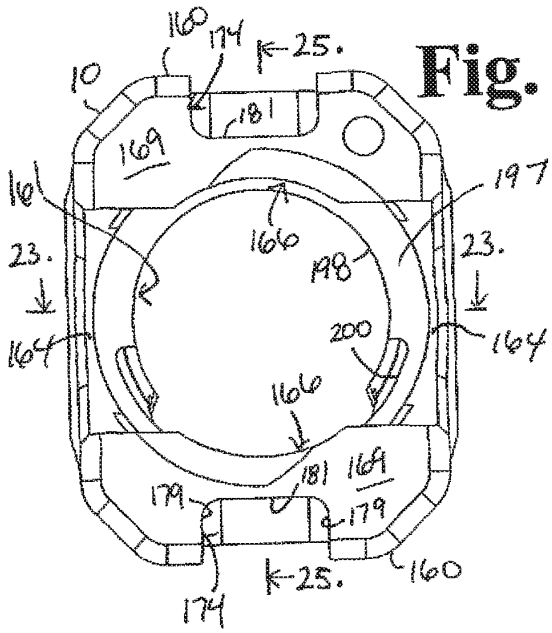

Fig. 21.

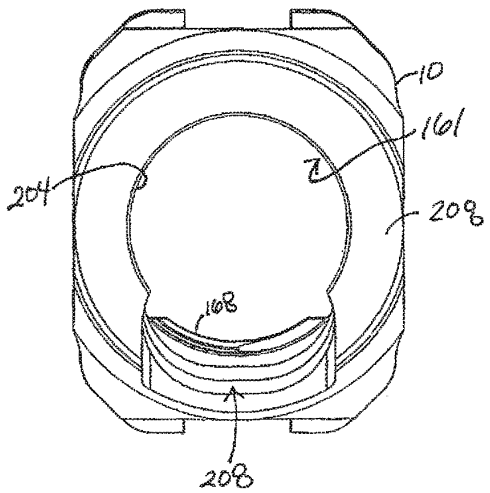

Fig. 22.

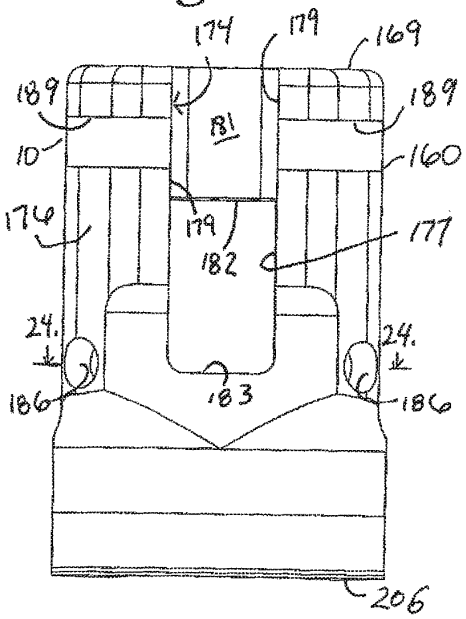

Fig. 23.

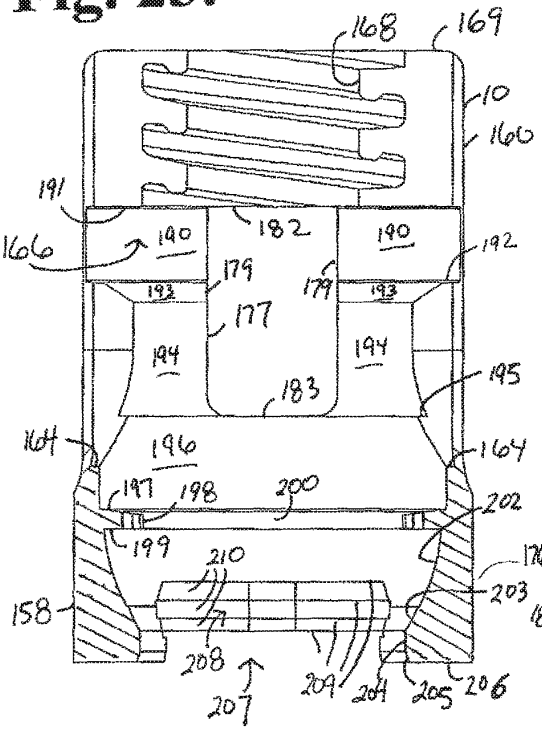

Fig. 24.

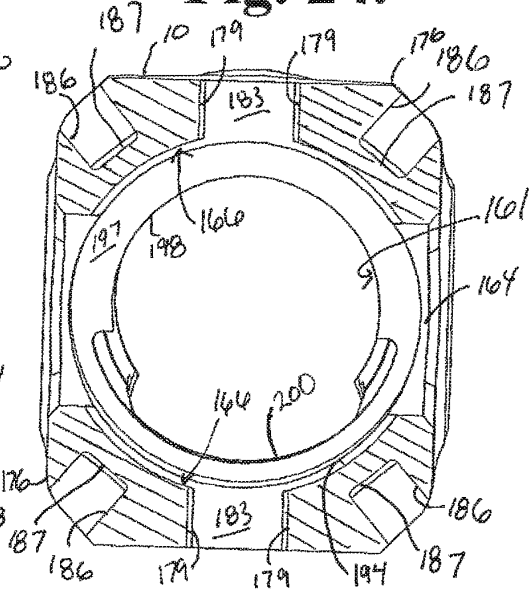

Fig. 25.

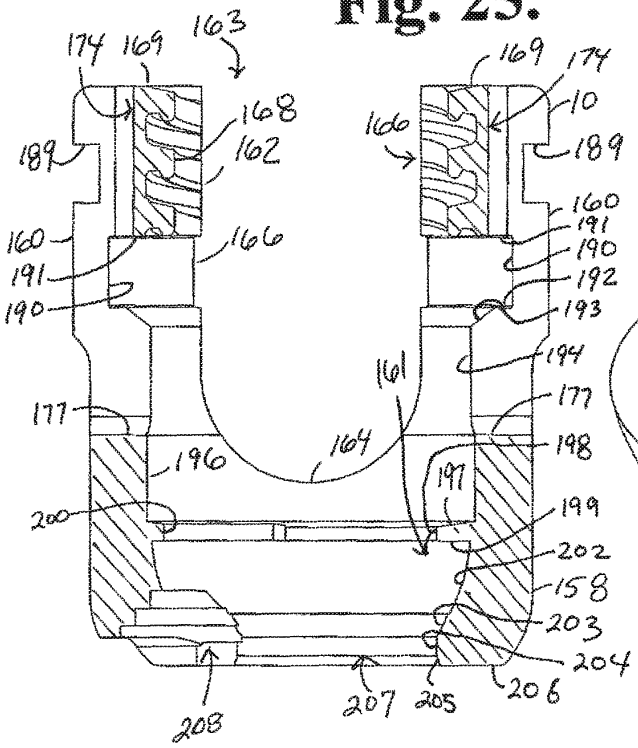

Fig. 26.

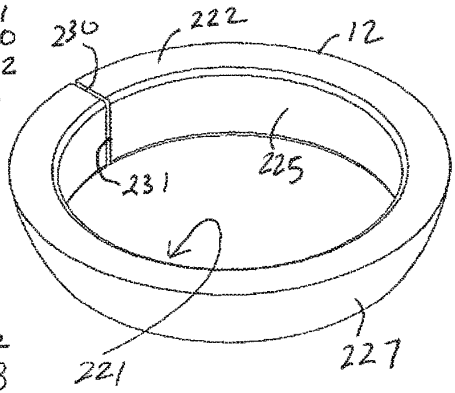

Fig. 27.

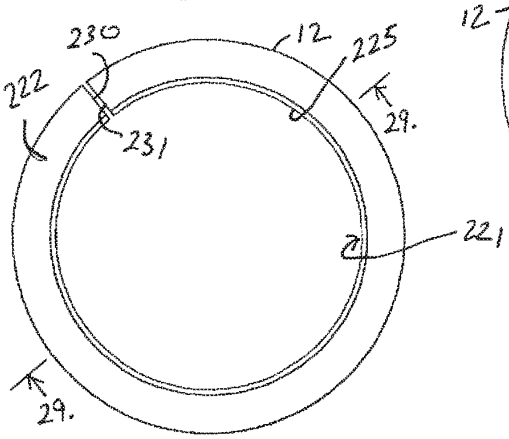

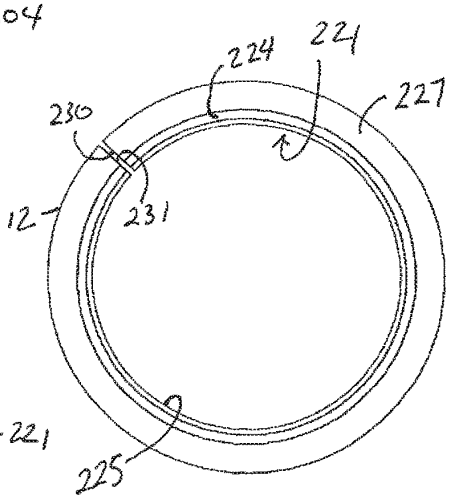

Fig. 28.

Fig. 29.

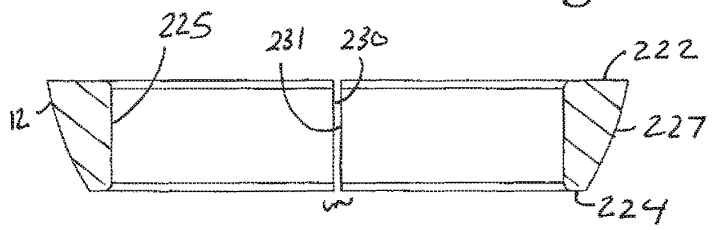

Fig. 30.

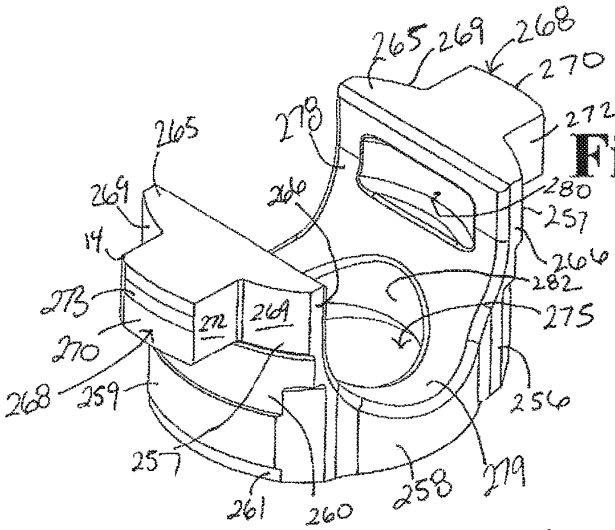

Fig. 31.

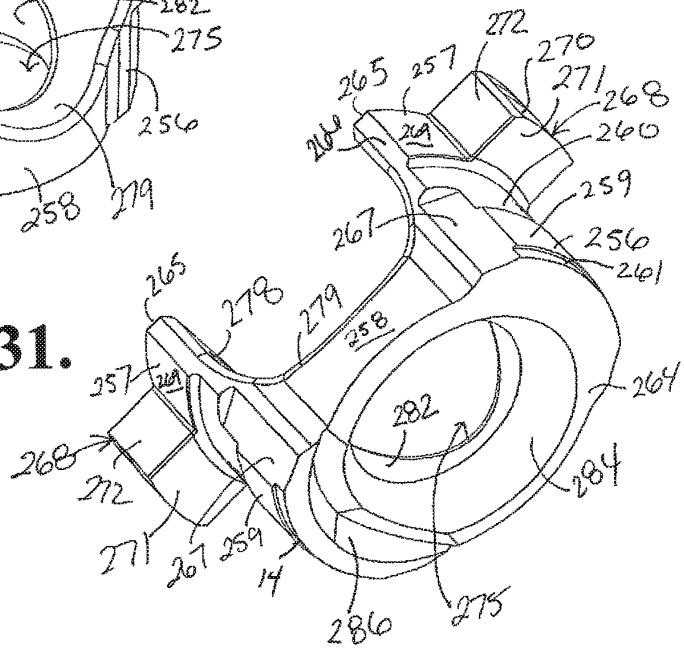

Fig. 32.

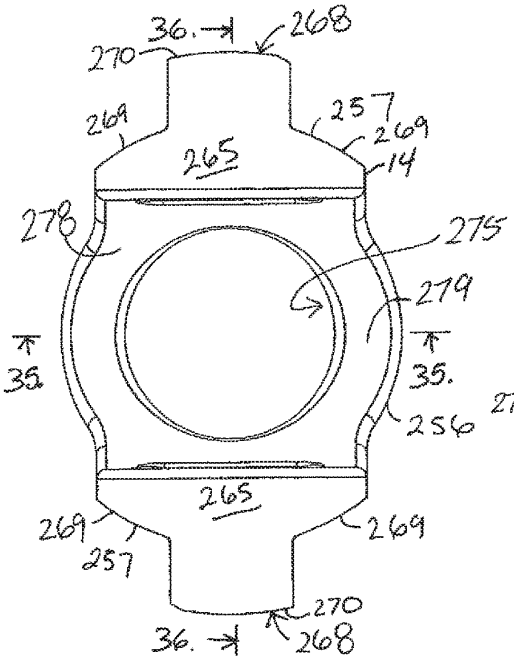

Fig. 33.

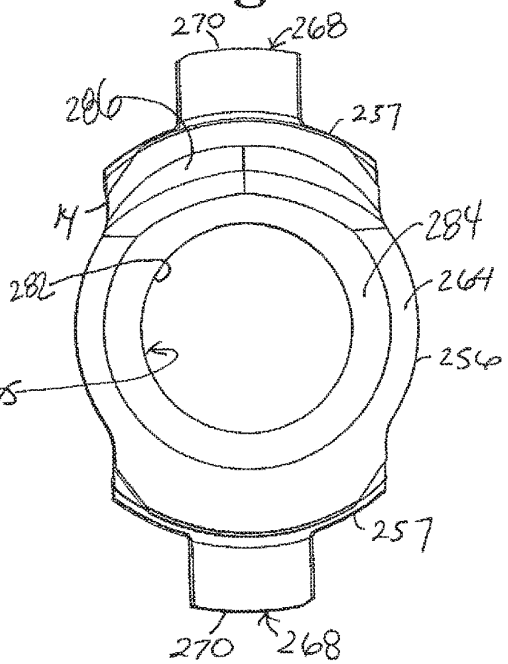

Fig. 34.

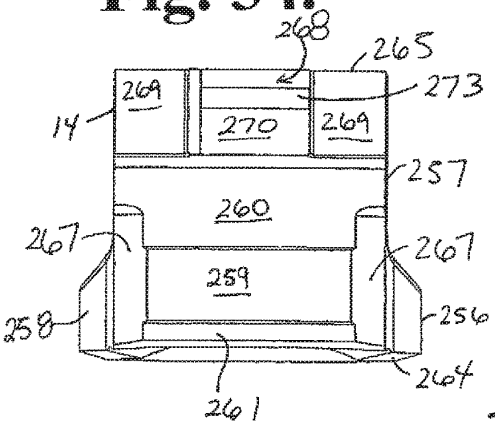

Fig. 35.

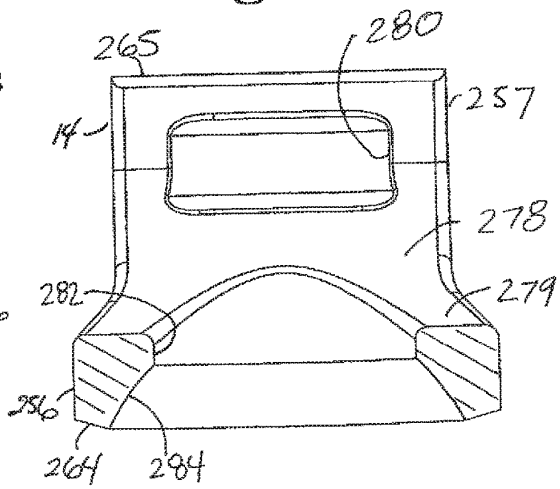

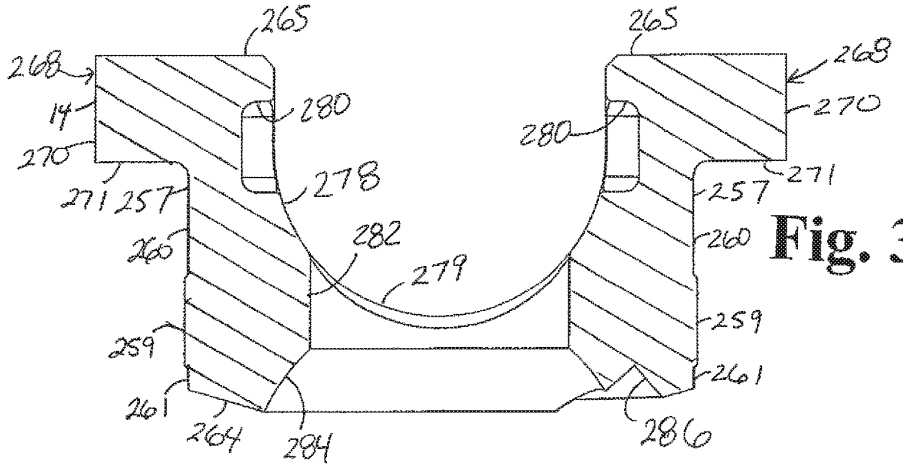

Fig. 36.

Fig. 37.

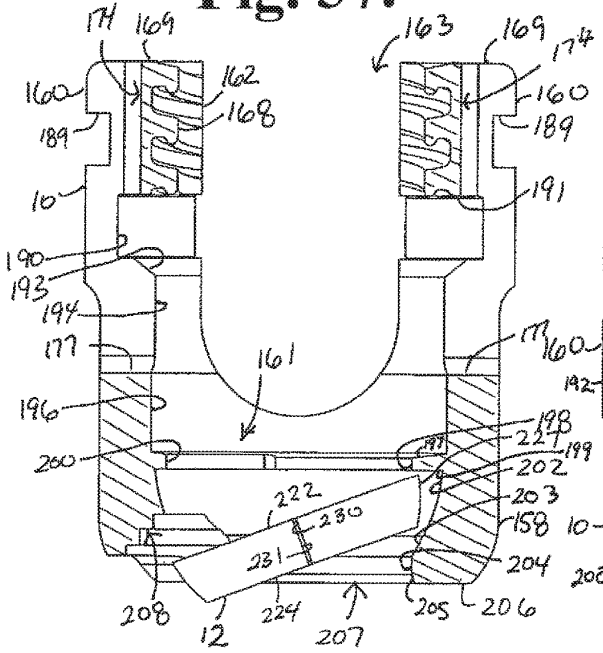

Fig. 38.

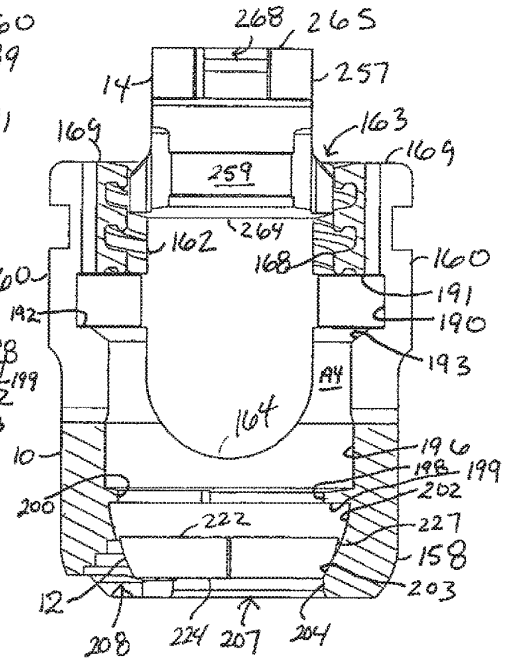

Fig. 39.

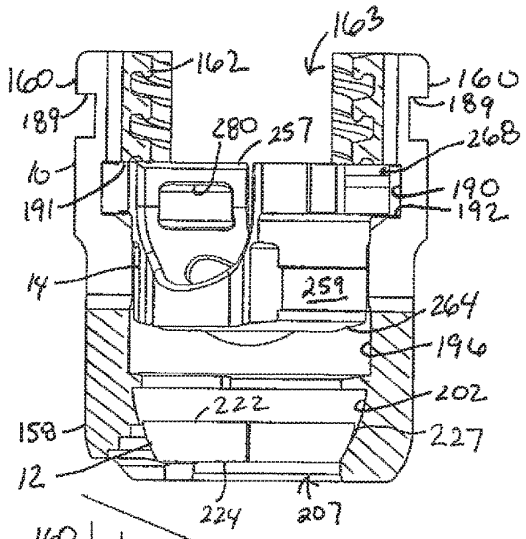

Fig. 40.

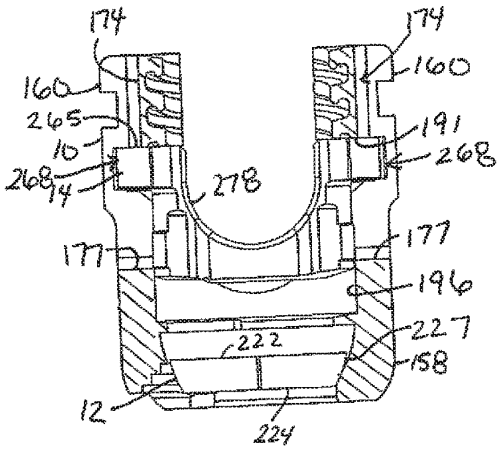

Fig. 41.

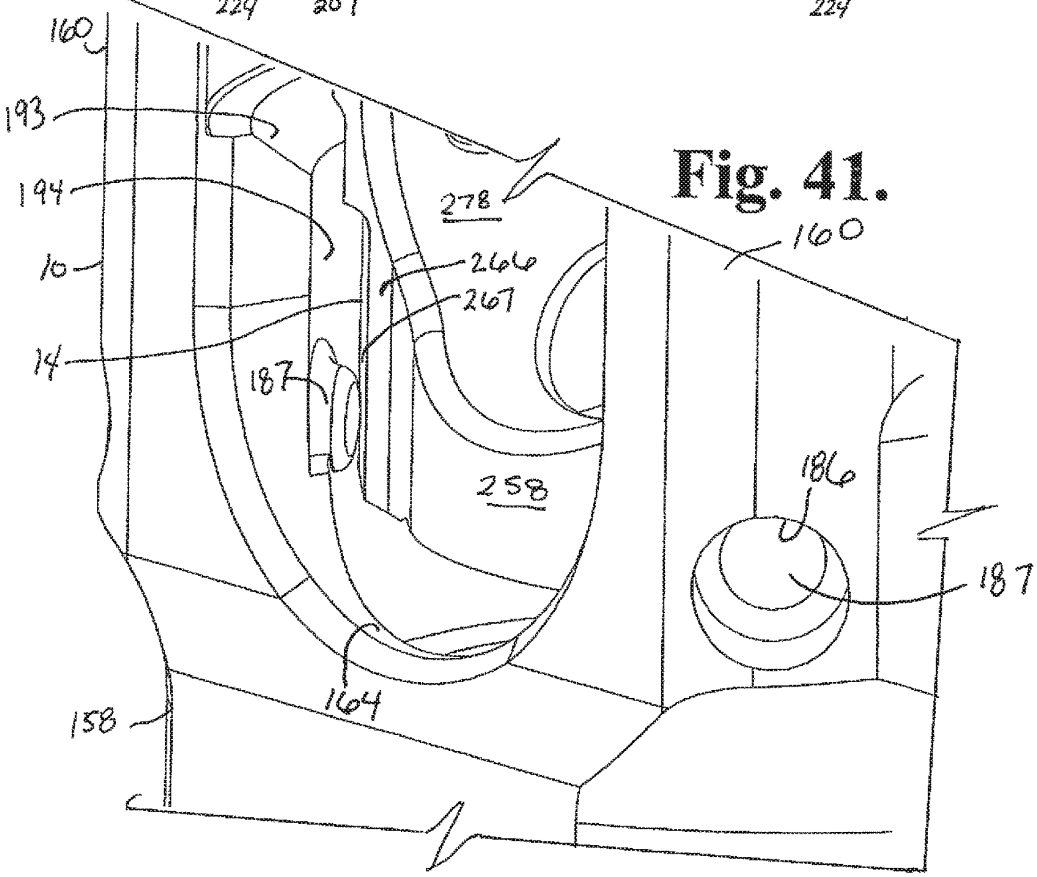

Fig. 42.

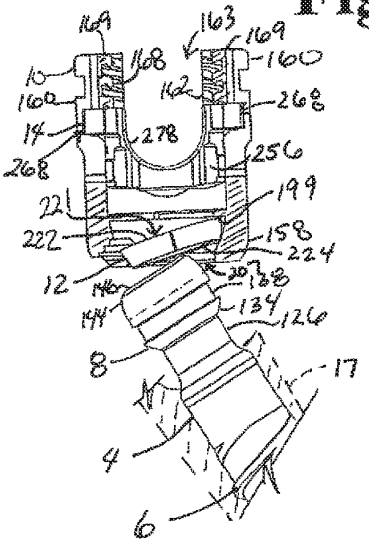

Fig. 43.

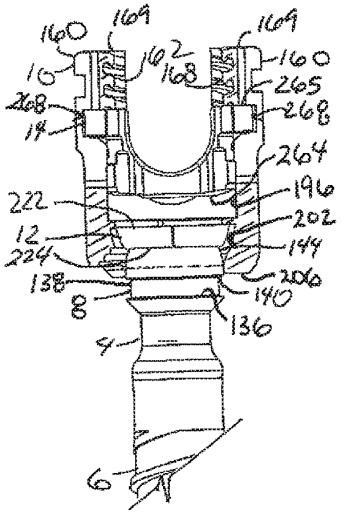

Fig. 44.

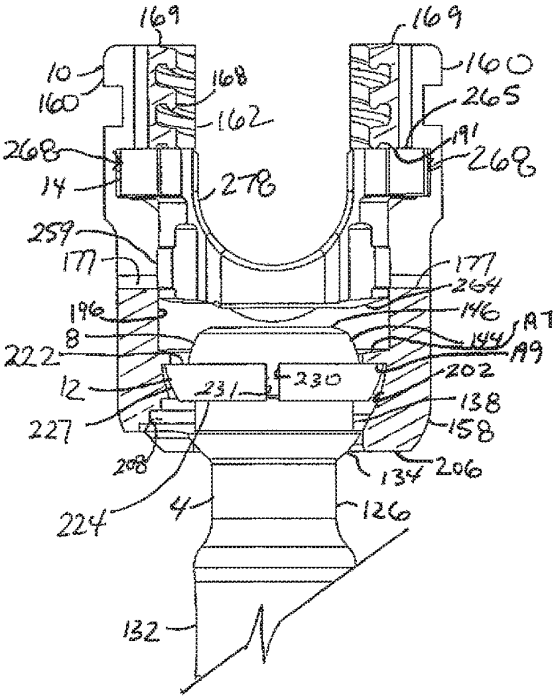

Fig. 45.

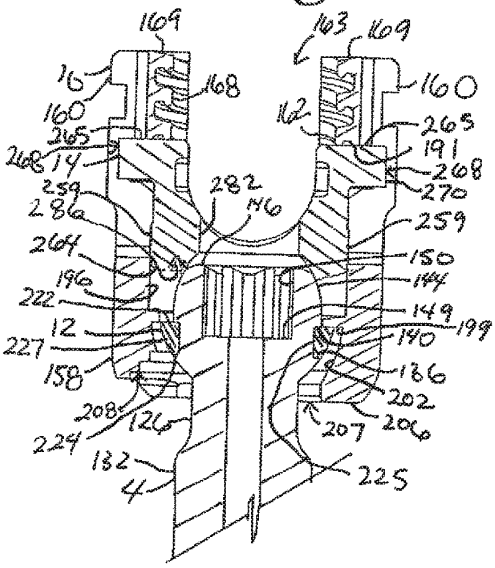

Fig. 46.

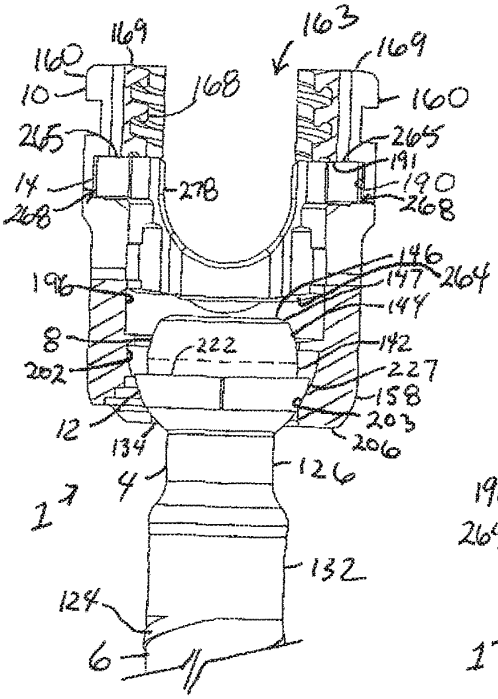

Fig. 47.

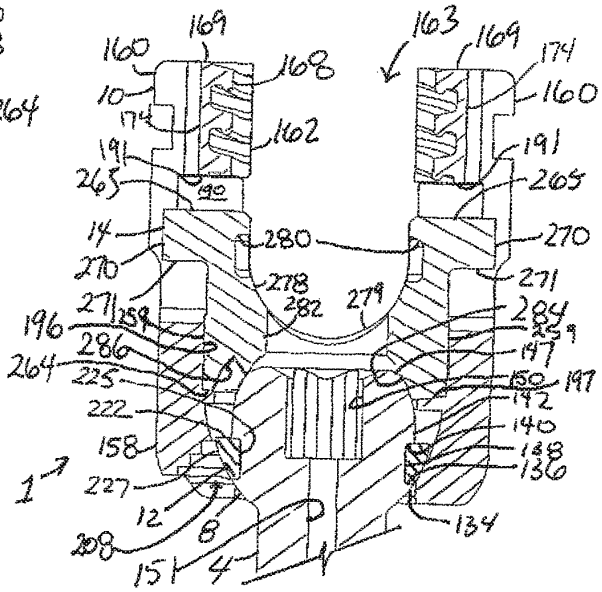

Fig. 48.

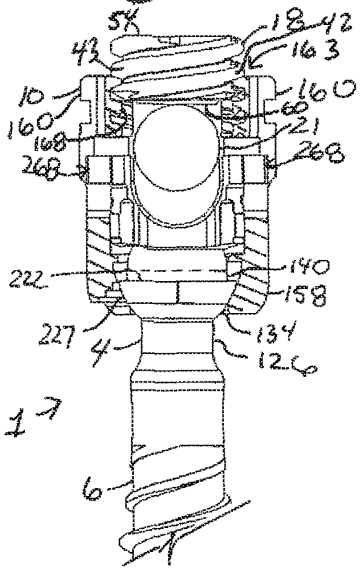

Fig. 49.

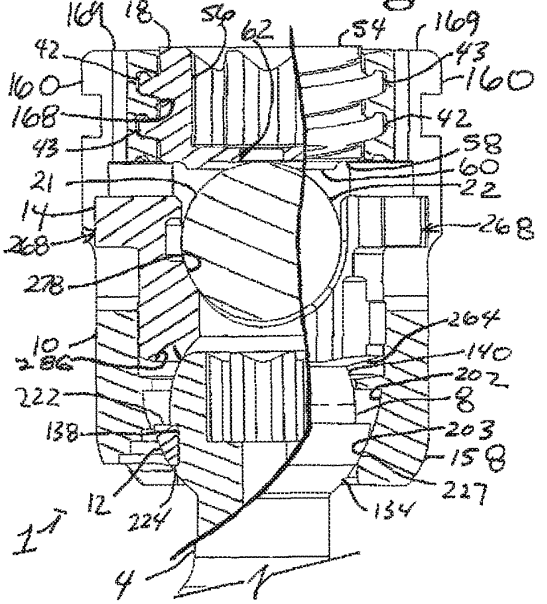

Fig. 50.

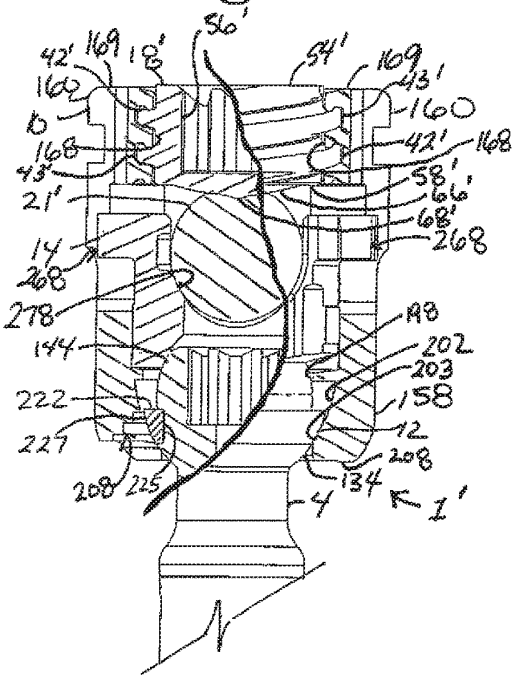

Fig. 51.

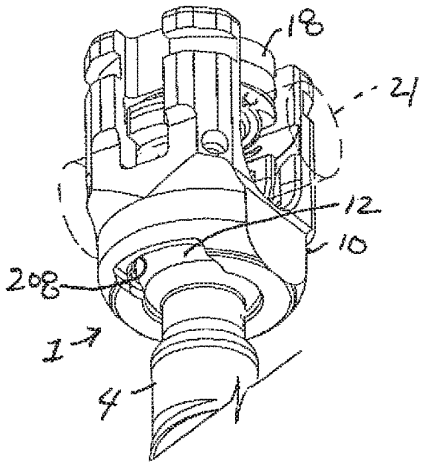

Fig. 52.

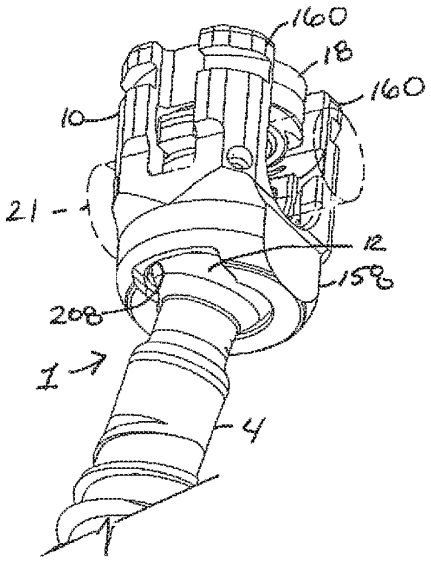

Fig. 53.

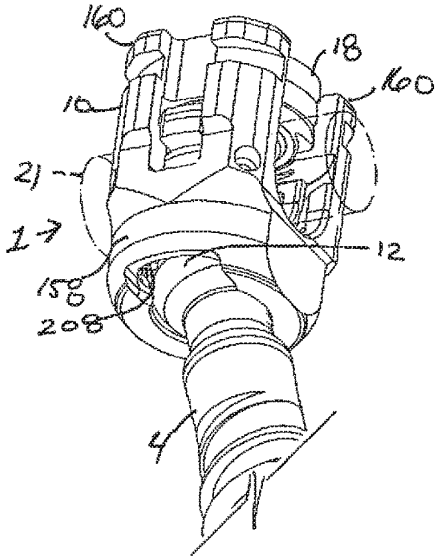

Fig. 54.

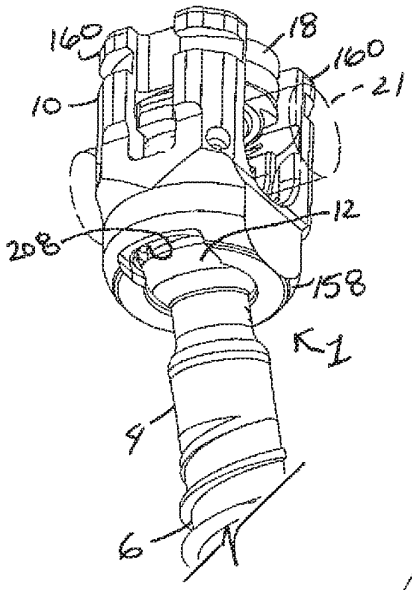

Fig. 55.

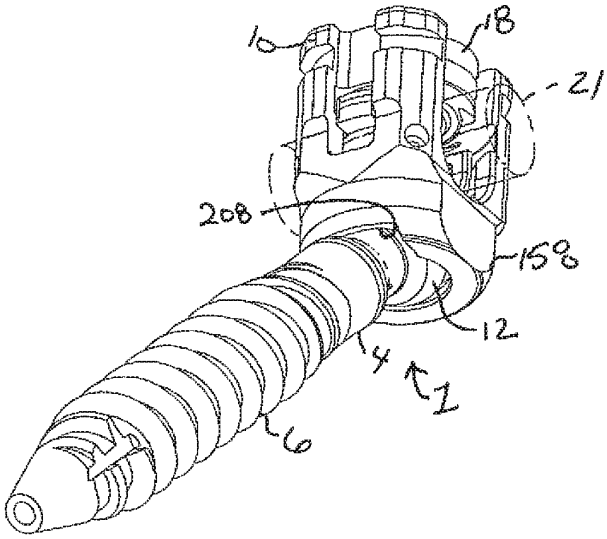

Fig. 56.

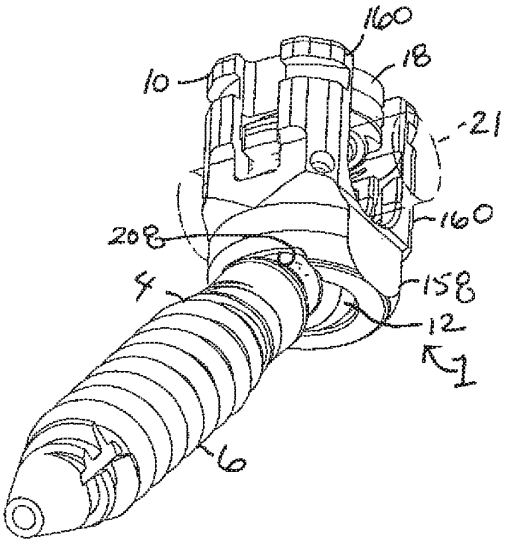

Fig. 57.

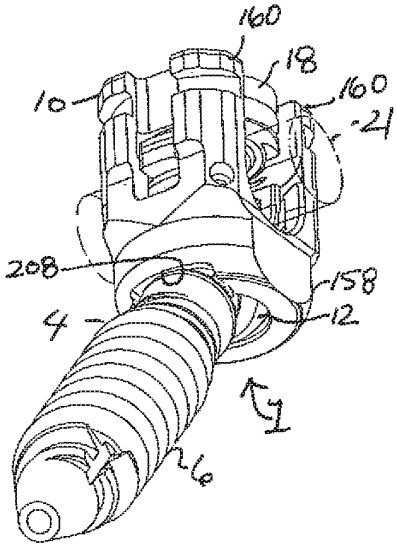

Fig. 58.

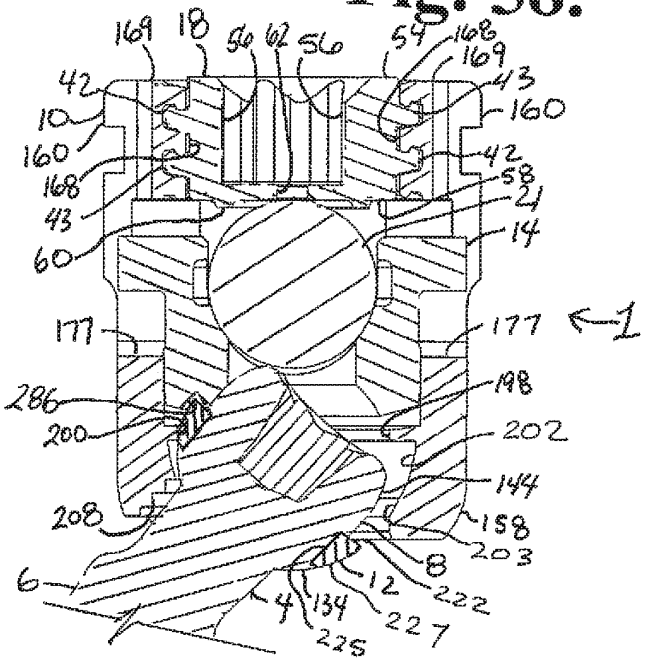
169
18
50
62
56
54
168
169
42
43
160
10
160
42
168
58
43
21
60
14
177
177
1
286
198
200
202
144
208
158
203
6
8
12
222
4
134
227
225

MEDICAL IMPLANT RECEIVERS HAVING DUAL LEAD IN CLOSURE MATING THREAD FORMS AND CURVATE EXTENDING INSTRUMENT ENGAGING GROOVES

CROSS-REFERENCE TO RELATED APPLICATIONS

The present application is a continuation of U.S. patent application Ser. No. 15/964,502, filed Apr. 27, 2018, now U.S. Pat. No. 10,548,641, which is a continuation of U.S. patent application Ser. No. 15/469,076, filed Mar. 24, 2017, now U.S. Pat. No. 9,956,004, which is a continuation of U.S. patent application Ser. No. 14/566,356, filed Dec. 10, 2014, now U.S. Pat. No. 9,636,146, which is a continuation of U.S. patent application Ser. No. 13/694,849, filed Jan. 10, 2013, now U.S. Pat. No. 8,911,479, issued Dec. 16, 2014, which claims the benefit of U.S. Provisional Application No. 61/631,746, filed Jan. 10, 2012 and U.S. Provisional Application No. 61/634,361, filed Feb. 28, 2012, all of which are incorporated by reference herein for all purposes.

BACKGROUND OF THE INVENTION

The present invention is directed to structure for joining together parts of a medical implant, in particular to closure mechanisms for use with open bone anchors in spinal surgery, and in some embodiments thereof, for use with spinal bone anchors such as polyaxial screws.

Bone anchors, such as bone screws and hooks are utilized in many types of spinal surgery in order to secure various implants to vertebrae along the spinal column for the purpose of stabilizing and/or adjusting spinal alignment. For example, the most common mechanism for providing vertebral support is to implant bone screws into certain bones which then in turn support a rod or are supported by the rod. Although both closed-ended and open-ended bone anchors are known, open-ended anchors are particularly well suited for connections to longitudinal connecting members such as hard, soft or deformable rods, dynamic or elastic connectors and connector arms, because such rods or other connector members do not need to be passed through a closed bore, but rather can be laid or urged into an open channel within a receiver or head of such a bone anchor. Generally, the anchors must be inserted into the bone as an integral unit or a preassembled unit, in the form of a shank or hook and connected pivotal receiver. In some instances, a portion of such a preassembled unit, such as a shank of a polyaxial bone screw assembly, may be independently implanted into bone, followed by push- or pop-on assembly of a receiver portion of the unit.

Typical open-ended bone screws include a threaded shank with a head or receiver having a pair of parallel projecting branches or arms which form a yoke with a U-shaped slot or channel to receive a rod or other longitudinal connecting member. Hooks and other types of connectors, as are used in spinal fixation techniques, may also include similar open ends for receiving rods or portions of other fixation and stabilization structure. The open-ended head or rod receiver portion of such implants typically includes a pair of spaced arms forming a channel closed by a closure member after the rod or other longitudinal connecting member is placed in the channel. Known closures include slide-on types, twist-on varieties that are rotated ninety degrees to a locked in position, and a variety of single start helically wound guide and advancement structures including, for example, thread forms having v-thread, reverse-angle buttress or square thread forms, to name a few, as well as other non-threadlike helically wound forms. Sometimes threaded plugs are utilized with outer threaded nuts to prevent splaying of the receiver arms.

As indicated above, the force required to press a closure structure down onto a rod or other connector located between arms of an open implant is considerable. Even though a head or receiver portion of an open polyaxial bone anchor may be pivoted in a direction to make it easier for the arms of the open implant to receive a rod or other connector, spinal misalignments, irregularities and the placement of other surgical tools make it difficult to place the rod or other connector between the arms of the implant while a closure structure is mated with the open implant as well as used to push the rod or other connector downwardly into the implant. For example, when the closure is a cylindrical plug having a single start helically wound guide and advancement structure, such structure must be aligned with mating structure on one of the implant arms and then rotated until a portion of the structure is captured by mating guide and advancement structure on both arms of the implant, all the while the closure is being pressed down on the rod while other forces are pushing and pulling the rod back out of the implant. Integral or mono-axial open implants that cannot be pivoted to receive the rod are even more difficult to manipulate during the initial placement of the rod and initial mating rotation of a closure plug between the spaced, open arms of the implant. Therefore, extraordinary forces are placed on the implant and closure plug while the surgeon either pushes down on the rod or pulls up on the bone to get the rod in position between the implant arms and to initially push down upon the rod with the closure plug.

SUMMARY OF THE INVENTION

A closure structure, top or plug of the invention for insertion between spaced arms of an open medical implant includes one or more helically wound guide and advancement features, each feature having a start surface or structure located at or near a bottom surface of the closure plug, each start structure simultaneously engaging and being captured by each of the spaced arms of the open implant upon initial rotation of the closure structure with respect to the open implant arms. According to an aspect of the invention, a double-start closure is disclosed having two helically wound forms thereon, each form having a start structure for simultaneously engaging a mating helical form on a respective open implant arm. Each time the illustrated duel- or double-start closure plug is rotated one turn (three hundred sixty degrees) between the implant arms, the closure plug advances axially into the implant and toward the rod by a width of two helical forms. The helically wound forms of the multi-start closure spiral around a cylindrical plug body thereof to an extent that the closure rotates over ninety degrees to fully or substantially receive the entire closure plug between the arms of the open implant. The illustrated closure is sized for at least one complete rotation (three hundred sixty degrees) of the plug with respect to the open implant to substantially receive the plug between the implant arms. Multi-start closures of the invention may have two or more coarse or fine helical forms, resulting in fewer or greater forms per axial distance spiraling about the closure plug body and thus resulting in plugs that rotate less (when more coarse) or more (when thin or fine) than one complete rotation to be fully received between the implant arms, typically, at least a ninety-one degree rotation is preferred.

An illustrated multi-start closure and mating open implant is in the form of non-threaded, interlocking flange forms. Also disclosed are multi-start closure structures provided with helically wound forms of other geometry, including, but not limited to helically wound threads such as reverse angle, buttress, square and v-threads. The multi-start closure may be cannulated for minimally invasive surgical applications.

Another illustrated multi-start closure embodiment of the invention is shown with a bone screw assembly having an open receiver with a pair of opposed arms, each arm having guide and advancement structure for simultaneous mating engagement with a start of the helically wound multi-start closure. A further embodiment according to the invention includes an open bone anchor receiver having integral upwardly extending break-off tabs that also have the guide and advancement structure for mating with the multi-start closure. A further embodiment includes an attachable/detachable guide tool cooperating with such a multi-start open receiver, the tool having inner guide and advancement structures located near a bottom thereof for rotatably and matingly receiving the multi-start closure and being synchronized with the receiver guide and advancement structure for rotating and driving the multi-start closure downward from the guide tool to the receiver.

Objects of the invention further include providing apparatus and methods that are easy to use and especially adapted for the intended use thereof and wherein the tools are comparatively inexpensive to produce. Other objects and advantages of this invention will become apparent from the following description taken in conjunction with the accompanying drawings wherein are set forth, by way of illustration and example, certain embodiments of this invention.

The drawings constitute a part of this specification and include exemplary embodiments of the present invention and illustrate various objects and features thereof.

BRIEF DESCRIPTION OF THE DRAWINGS

FIG. **1** is a perspective view of an embodiment of a multi-start closure according to the invention.

FIG. **2** is another perspective view of the multi-start closure of FIG. **1**.

FIG. **3** is a front elevational view of the closure of FIG. **1** shown with a portion of a receiver of a polyaxial bone screw according to FIG. **8**, the receiver shown in partial front elevation with portions broken away to show the detail thereof, and further showing a rod being pressed upon by the closure, the rod also in partial front elevation with portions broken away to show the detail thereof.

FIG. **4** is a reduced top plan view of the closure of FIG. **1**.

FIG. **5** is a reduced bottom plan view of the closure of FIG. **1**.

FIG. **6** is an enlarged front elevational view of the closure of FIG. **1** with portions broken away to show the detail thereof.

FIG. **7** is a reduced cross-sectional view taken along the line **7-7** of FIG. **6**.

FIG. **8** a partial front elevational view of an open bone screw assembly, with portions broken away to show the detail thereof, including a receiver, a shank, a compression insert and also shown in engagement with the closure top of FIG. **1** (in reduced view) and a longitudinal connecting member in the form of a hard rod.

FIG. **9** is a front elevational view of an alternative closure of an embodiment of the invention, similar to the closure of FIG. **1**, but including a break-off head, the alternative closure shown with a portion of a receiver of the polyaxial bone screw of FIG. **8** shown in enlarged and partial front elevation with portions broken away to show the detail thereof, and further showing a rod being pressed upon by the alternative closure, the rod also in partial front elevation with portions broken away to show the detail thereof.

FIG. **10** is another front elevational view of the closure of FIG. **9** with portions broken away to show the detail thereof.

FIG. **11** is a front elevational view of an alternative square-thread closure of an embodiment of the invention with portions broken away to show the detail thereof, the closure shown with a portion of a receiver of the polyaxial bone screw of FIG. **8** shown in enlarged and partial front elevation with portions broken away to show the detail thereof, and further showing a rod being pressed upon by the alternative closure, the rod also in partial front elevation with portions broken away to show the detail thereof.

FIG. **12** is a front elevational view of an alternative reverse angle closure of an embodiment of the invention with portions broken away to show the detail thereof, the closure shown with a portion of a receiver of the polyaxial bone screw of FIG. **8** shown in enlarged and partial front elevation with portions broken away to show the detail thereof, and further showing a rod being pressed upon by the alternative closure, the rod also in partial front elevation with portions broken away to show the detail thereof.

FIG. **13** is a front elevational view of an alternative v-thread closure embodiment of the invention with portions broken away to show the detail thereof, the closure shown with a portion of a receiver of the polyaxial bone screw of FIG. **8** shown in enlarged and partial front elevation with portions broken away to show the detail thereof, and further showing a rod being pressed upon by the alternative closure, the rod also in partial front elevation with portions broken away to show the detail thereof.

FIG. **14** is a front elevational view of an alternative buttress-thread closure embodiment of the invention with portions broken away to show the detail thereof, the closure shown with a portion of a receiver of the polyaxial bone screw of FIG. **8** shown in enlarged and partial front elevation with portions broken away to show the detail thereof, and further showing a rod being pressed upon by the alternative closure, the rod also in partial front elevation with portions broken away to show the detail thereof.

FIG. **15** is a partial front elevational view of an embodiment of a multi-start open bone anchor receiver of an embodiment of the invention with portions broken away to show the detail thereof, the receiver including break-off tabs.

FIG. **16** is an enlarged and partial front elevational view of the receiver of FIG. **15** with portions broken away to show the detail thereof.

FIG. **17** is a partial front elevational view of an embodiment of a bone anchor receiver having a guide and advancement structure that matingly cooperates with the multi-start closure of FIG. **1**, also shown in front elevation, the receiver having portions broken away to show the detail thereof, and further shown with a guide tool, shown in phantom, the guide tool having a multi-start guide and advancement structure receiving inner surface synchronized with the bone anchor receiver guide and advancement structure.

FIG. **18** is an exploded perspective view of the polyaxial bone screw assembly of FIG. **8**.

FIG. **19** is an enlarged perspective view of the receiver of FIG. **18**.

FIG. **20** is a top plan view of the receiver of FIG. **19**.

FIG. **21** is a bottom plan view of the receiver of FIG. **19**.

FIG. **22** is a side elevational view of the receiver of FIG. **19**.

FIG. **23** is an enlarged cross-sectional view taken along the line **23-23** of FIG. **20**.

FIG. **24** is an enlarged cross-sectional view taken along the line **24-24** of FIG. **22**.

FIG. **25** is an enlarged cross-sectional view taken along the line **25-25** of FIG. **20**.

FIG. **26** is an enlarged perspective view of the retainer of FIG. **18**.

FIG. **27** is a top plan view of the retainer of FIG. **16**.

FIG. **28** is a bottom plan view of the retainer of FIG. **26**.

FIG. **29** is an enlarged cross-sectional view taken along the line **29-29** of FIG. **27**.

FIG. **30** is an enlarged perspective view of the compression insert of FIG. **18**.

FIG. **31** is another perspective view of the insert of FIG. **30**.

FIG. **32** is a top plan view of the insert of FIG. **30**.

FIG. **33** is a bottom plan view of the insert of FIG. **30**.

FIG. **34** is a reduced side elevational view of the insert of FIG. **30**.

FIG. **35** is an enlarged cross-sectional view taken along the line **35-35** of FIG. **32**.

FIG. **36** is an enlarged cross-sectional view taken along the line **36-36** of FIG. **32**.

FIG. **37** is an enlarged front elevational view of the receiver and retainer of FIG. **18** with portions of the receiver broken away to show the detail thereof and shown in an early stage of assembly with the retainer.

FIG. **38** is a front elevational view with portions broken away of the receiver and retainer, similar to FIG. **37**, further showing the retainer and also the compression insert of FIG. **18** in a later stage of assembly, the compression insert shown in side elevation.

FIG. **39** is a reduced front elevational view with portions broken away, similar to FIG. **38**, showing the insert in a stage of being rotated into a desired position within the receiver.

FIG. **40** is a reduced front elevational view with portions broken away, similar to FIG. **39** showing the insert being rotated into the desired position.

FIG. **41** is an enlarged and partial perspective view of the assembly as shown in FIG. **40**, further showing portions of the receiver pressed or crimped toward the insert to prohibit further rotation of the insert with respect to the receiver.

FIG. **42** is an enlarged and partial, partially exploded front elevational view of the shank of FIG. **18** and also the receiver, retainer and compression insert of FIG. **18** as assembled as in FIG. **32**, with portions broken away to show the detail thereof, the shank being shown implanted in a vertebra, shown in phantom, as the shank may be assembled with the receiver either before or after implantation.

FIG. **43** is a partial front elevational view, similar to FIG. **42**, with portions broken away to show the detail thereof and showing the shank in a stage of assembly with the retainer.

FIG. **44** is an enlarged partial front elevational view, similar to FIG. **43**, with portions broken away to show the detail thereof and showing the shank in a subsequent stage of assembly with the retainer wherein the retainer is at maximum expansion with the receiver cavity.

FIG. **45** is a reduced and partial front elevational view, similar to FIG. **44**, with portions broken away to show the detail thereof wherein the shank is fully assembled with the retainer.

FIG. **46** is a partial front elevational view, similar to FIG. **45**, with portions broken away to show the detail thereof and showing the retainer dropped down to a seated position within the receiver.

FIG. **47** is an enlarged and partial front elevational view with portions broken away, similar to FIG. **46** and further showing the insert after being pressed downwardly into friction fit engagement with the shank.

FIG. **48** is an enlarged and partial front elevational view with portions broken away of the assembly of FIG. **18**, shown with the closure top partially assembled as also shown in FIG. **3**.

FIG. **49** is an enlarged and partial front elevational view with portions broken away, similar to FIG. **48** and further showing the closure fully assembled between arms of the receiver.

FIG. **50** a reduced and partial front elevational view with portions broken away of the assembly of FIG. **49**, but with the rod and closure top thereof removed and replaced with an alternative deformable rod and an alternative multi-start closure of the invention, the insert remaining locked against the receiver and thus keeping the shank locked in place during removal and replacement of the rod and closure top.

FIG. **51** is a reduced and partial perspective view of the assembly of FIG. **49**.

FIG. **52** is a partial perspective view, similar to FIG. **51**, but showing the shank disposed at an eighteen degree angle (cephalic) with respect to the receiver.

FIG. **53** is a partial perspective view, similar to FIG. **52**, but showing the shank disposed at an eighteen degree angle (caudal) with respect to the receiver.

FIG. **54** is a partial perspective view, similar to FIG. **53**, but showing the shank disposed at an eighteen degree angle (lateral) with respect to the receiver.

FIG. **55** is a partial perspective view, similar to FIG. **54**, but showing the shank disposed at a forty-two degree (medial) by eight degree (cephalic) angle with respect to the receiver.

FIG. **56** is a partial perspective view, similar to FIG. **55**, but showing the shank disposed at a forty-two degree (medial) angle with respect to the receiver.

FIG. **57** is a partial perspective view, similar to FIG. **56**, but showing the shank disposed at a forty-two degree (medial) by eight degree (caudal) angle with respect to the receiver.

FIG. **58** is an enlarged front elevational view of the assembly of FIG. **57** with portions broken away to show the detail thereof.

DETAILED DESCRIPTION OF THE INVENTION

As required, detailed embodiments of the present invention are disclosed herein; however, it is to be understood that the disclosed embodiments are merely exemplary of the invention, which may be embodied in various forms. Therefore, specific structural and functional details disclosed herein are not to be interpreted as limiting, but merely as a basis for the claims and as a representative basis for teaching one skilled in the art to variously employ the present invention in virtually any appropriately detailed structure. It is also noted that any reference to the words top, bottom, up and down, and the like, in this application refers to the alignment shown in the various drawings, as well as the normal connotations applied to such devices, and is not intended to restrict positioning of the bone attachment structures in actual use.

Furthermore, the terms lead, pitch and start, as such terms are used to describe helically wound guide and advancement structures, are to be understood as follows: Lead is a distance along the axis of a closure plug that is covered by one complete rotation (360 degrees) of the closure plug with respect to a mating open implant. Pitch is the distance from a crest (or outer point or location) of one guide and advancement structure form to the next. For example in a single-start thread-form, such as a single start, helically wound v-thread closure plug, lead and pitch are the same. Single start means that there is only one ridge or helically wound form wrapped around a cylindrical core, or in the case of the present invention, wrapped around a cylindrical closure plug body and thus there is only one start structure or surface at a base or forward end of the closure body that initially engages a mating structure on the open implant. Each time a single start closure rotates one turn (360 degrees), the closure has advanced axially by a width of one ridge or one helical form. Double-start means that there are two ridges or forms wrapped around a core body and thus there are two starting surfaces or structures on the closure plug. Therefore, each time a double-start body rotates one turn (360 degrees), such a body has advanced axially by a width of two ridges or forms. Multi-start means that there are at least two and may be up to three or more of such ridges or forms wrapped around a core body.

With reference to FIGS. **1-8** and **18-58**, and in particular to FIGS. **8** and **18**, the reference number **1** generally represents an open implant in the form of a polyaxial bone screw apparatus or assembly that includes a shank **4**, that further includes a body **6** integral with an upwardly extending upper portion or capture structure **8**; a receiver **10**; a retaining structure or retainer **12**, a compression or pressure insert **14**, and a multi-start closure structure or plug **18** of the invention in the form of a cylindrical plug having a double start helically wound flange-form. It is noted that multi-start closure embodiments of the invention, such as the closure **18** may be used with a variety of open implants including, but not limited to a wide variety of polyaxial screws, mono-axial or fixed screws, hooks and other types of open implants requiring a plug or closure mechanism to fix a rod or other implant member to a vertebra or other bone. Thus, the assembly **1** is only one example of how multi-start closures of the invention may be used.

The closure structure **18** presses against and captures a longitudinal connecting member, for example, a rod **21** which in turn engages the compression insert **14** that presses against the shank upper portion **8** that is attached to the retaining structure that in turn presses against an inner surface of the receiver **10**, so as to capture and fix the longitudinal connecting member **21** within the receiver **10** and thus fix the member **21** relative to a vertebra (not shown). The illustrated receiver **10** and the shank **4** cooperate in such a manner that the receiver **10** and the shank **4** can be secured at any of a plurality of angles, articulations or rotational alignments relative to one another and within a selected range of angles both from side to side and from front to rear, to enable flexible or articulated engagement of the receiver **10** with the shank **4** until both are locked or fixed relative to each other near the end of an implantation procedure.

The illustrated rod **21** is hard, stiff, non-elastic and cylindrical, having an outer cylindrical surface **22**. However, in other embodiments, the rod **21** may be elastic, deformable and/or of a different cross-sectional geometry. The rod **21** may be made from a variety of metals, metal alloys and deformable and less compressible plastics, including, but not limited to rods made of elastomeric, polyetheretherketone (PEEK) and other types of materials, such as polycarbonate urethanes (PCU) and polyethylenes. Furthermore, in lieu of a rod, longitudinal connecting members for use with the assembly **1** may take a variety of shapes, and/or may include a tensioned cord as described in greater detail herein.

It is noted that the receiver **10** includes guide and advancement structures **168** that are shown as interlocking flange forms described in greater detail in applicant's U.S. Pat. No. 6,726,689, also incorporated by reference herein. Alternately, when the closure structure includes a different helical form, the receiver cooperating structures (e.g., **168**) must also be of a cooperating, mating geometry, such as a square-shaped thread receiving form, a buttress thread receiving form, a reverse angle thread receiving form or other thread-like or non-thread-like helically wound discontinuous advancement structure receiving forms for operably guiding under rotation and advancing a multi-start closure structure downward between the receiver arms **160**, as well as eventual torquing when the closure structure abuts against the rod **21** or other connecting member.

With particular reference to FIGS. **1-7**, the illustrated multi-start closure structure **18** is a double start closure having a substantially cylindrical plug body **40** having an axis of rotation that is the same as that of the receiver **10** and including a helically wound guide and advancement structure in the form of a pair of helically wound forms **42** and **43**, each illustrated as an interlocking flange form that operably joins with mating flange form guide and advancement structures **168** disposed on the arms of the receiver **10**. The form **42** includes a start surface or structure **46** and the form **43** includes a start surface or structure **47**. Each helically wound form **42** and **43** may take a variety of forms and geometries, including those described in Applicant's U.S. Pat. No. 6,726,689, which is incorporated by reference herein. It is noted (and also described in greater detail subsequently herein) that each of the closure structure guide and advancement structures or forms **42** and **43** could alternatively be in the form of a buttress thread, a square thread, a reverse angle thread, a v-thread or other thread like or non-thread like helically wound advancement structures, for operably guiding under rotation and advancing the closure structure downward between the arms of the receive 10 and preferably having such a nature as to resist splaying of the receiver arms when the closure structure **18** is advanced into the receiver channel. The specific flange forms **42** and **43** illustrated in FIGS. **1-7**, as well as acceptable alternative locking forms, are described in detail in Applicant's U.S. Pat. No. 6,726,689, incorporated by reference herein, and thus shall not be discussed further herein. Such interlocking flange forms are preferred as the added strength provided thereby beneficially cooperate with and counter any reduction in strength caused by the any reduced profile of the receiver **10** that may more advantageously engage longitudinal connecting member components.

The illustrated closure structure **18** also includes a top surface **54** with an internal drive **56** in the form of an aperture that is illustrated as a star-shaped internal drive such as that sold under the trademark TORX, or may be, for example, a hex drive, or other internal drives such as slotted, tri-wing, spanner, two or more apertures of various shapes, and the like. A driving tool (not shown) sized and shaped for engagement with the internal drive **56** is used for both rotatable engagement and, if needed, disengagement of the closure **18** from the receiver **10** at arms **160**. It is also foreseen that the closure structure **18** may alternatively include a break-off head designed to allow such a head to

break from a base of the closure at a preselected torque, for example, 70 to 140 inch pounds. Such a closure structure would also include a body surface having an internal drive to be used for closure removal. A base or bottom surface **58** of the closure is planar and further includes a rim **60** for engagement and penetration into the surface **22** of the rod **21** in certain embodiments of the invention. The closure top **18** further includes a cannulation through bore **62** extending along a central axis thereof and through a drive base surface **63** and the bottom surface **58** thereof. Such a through bore provides a passage through the closure **18** interior for a length of wire (not shown) inserted therein to provide a guide for insertion of the closure top into the receiver arms **160**.

The closure structure **18** helically wound flange form start structures **46** and **47** of the respective forms **42** and **43** are located on opposite sides of the closure plug body **40** and are both located adjacent the bottom surface **58**. As illustrated in FIG. **3**, for example, when the closure structure **18** is rotated into the receiver **10** between receiver arms **160**, each having a guide and advancement structure **168**, the start **46** engages mating guide and advancement structure **168** on one arm **160** and the start **47** simultaneously engages guide and advancement structure **168** on the opposing arm **160**, both forms **42** and **43** being simultaneously captured by the mating forms **168** on the opposed arms **160**. As the structure **18** is rotated, the structure advances axially downwardly between the arms **160** and presses evenly down upon the captured rod **21**. Each time the illustrated duel- or double-start closure plug **18** is rotated one complete turn or pass (three hundred sixty degrees) between the implant arms, the closure plug **18** advances axially into the implant and toward the rod by a width of two helical flange forms. The illustrated closure **18** is sized for at least one complete rotation (three hundred sixty degree) of the plug **18** with respect to the receiver **10** open arms **160** to substantially receive the plug between the implant arms. Each of the start structures **46** and **47** includes a leading face having at least one curvate surface. The at least one curvate surface includes at least one radius of curvature. In one embodiment, the at least one curvate surface is both concave and convex. Multi-start closures of the invention may have two or more coarse or fine helical forms, resulting in fewer or greater forms per axial distance spiraling about the closure plug body and thus resulting in plugs that rotate less or more than one complete rotation to be fully received between the implant arms. Preferably, helically wound forms of the multi-start closure of the invention are sized so as to spiral around a cylindrical plug body thereof to an extent that the closure rotates at least ninety-one degrees to fully or substantially receive the closure plug between the arms of the bone screw receiver or other open implant. Particularly preferred guide and advancement structures are sized for at least one complete turn or pass (three-hundred sixty degree) of the closure between the receiver **10** arms and as many as two to three rotations to be fully received between implant arms.

An alternative closure top, such as the top **18'** shown in FIG. **50** for use with a deformable rod, such as a PEEK rod **21'**, for example, includes a bottom surface **58'** that has a domed portion **66'** with a central nub **68'** in lieu of the flat and rimmed surfaces of the closure top **18**. Otherwise, the closure top **18'** includes a guide and advancement structures **42'** and **43'**, a top surface **54'** and an internal drive feature **56'** the same or substantially similar to the respective guide and advancement structures **42** and **43**, top surface **54** and internal drive feature **56** of the closure top **18**.

The shank **4**, best illustrated in FIGS. **18** and **42-49**, is elongate, with the shank body **6** having a helically wound bone implantable thread **124** (single or dual lead thread form) extending from near a neck **126** located adjacent to the upper portion or capture structure **8**, to a tip **128** of the body **6** and extending radially outwardly therefrom. During use, the body **6** utilizing the thread **124** for gripping and advancement is implanted into the vertebra **17** leading with the tip **128** and driven down into the vertebra with an installation or driving tool (not shown), so as to be implanted in the vertebra to near the neck **126**, as more fully described in the paragraphs below. The shank **4** has an elongate axis of rotation generally identified by the reference letter A.

The neck **126** extends axially upward from the shank body **6**. The neck **126** may be of the same or is typically of a slightly reduced radius as compared to an adjacent upper end or top **132** of the body **6** where the thread **124** terminates. Further extending axially and outwardly from the neck **126** is the shank upper portion **8** that provides a connective or capture apparatus disposed at a distance from the upper end **132** and thus at a distance from the vertebra **17** when the body **6** is implanted in such vertebra.

The shank upper portion **8** is configured for a pivotable connection between the shank **4** (with attached retainer **12**) and the receiver **10** prior to fixing of the shank **4** in a desired position with respect to the receiver **10**. The shank upper portion **8** has an outer, convex and substantially spherical lower surface **134** that extends outwardly and upwardly from the neck **126** and terminates at a substantially planar ledge or shelf **136** that is annular and disposed perpendicular to the shank axis A. The spherical lower surface **134** has an outer radius that is the same or substantially similar to an outer radius of the retainer **12** as will be described in greater detail below, the surface **134** as well as the retainer **12** outer surface participating in the ball and socket joint formed by the shank **4** and attached retainer **12** within the partially spherical surface defining an inner cavity of the receiver **10**. Extending upwardly from the ledge **136** is a cylindrical surface **138**, the surface **138** having a radius that is smaller than the radius of the lower spherical surface **134**. Extending outwardly from the cylindrical surface **138** is another annular surface or upper ledge **140** that faces toward the ledge **136** and is also substantially perpendicular to the axis A. As will be discussed in greater detail below, the lower ledge **136**, cylindrical surface **138** and upper ledge **140** cooperate to capture and fix the resilient open retainer **12** to the shank upper portion **8**, prohibiting movement of the retainer **12** along the axis A once the retainer **12** is located between the ledges **136** and **140**. Extending upwardly from the upper ledge **140** is a cylindrical surface **142** having a radius smaller than the radius of the spherical surface **134** but larger than the radius of the cylindrical surface **138**. Extending upwardly from the surface **142** is an upper partially spherical or domed surface **144**. The spherical surface **144** has an outer radius configured for sliding cooperation and ultimate frictional mating with a substantially spherical concave surface of the compression insert **14** that has the same or substantially similar radius as the surface **144**. The radius of the surface **144** is smaller than the radius of the lower spherical surface **134**. Located near or adjacent to the surface **144** is an annular top surface **146**. In the illustrated embodiment a bevel **147** extends about the spherical surface **144** and is located between the spherical surface **144** and the annular planar top surface **146**.

A counter sunk substantially planar base or seating surface **149** partially defines an internal drive feature or imprint **150**. The illustrated internal drive feature **150** is an aperture

formed in the top surface **146** and has a multi-lobular or star-shaped aperture, such as those sold under the trademark TORX, the aperture designed to receive a tool (not shown) of an Allen wrench type, into the aperture for rotating and driving the bone screw shank **4**. It is foreseen that such an internal tool engagement structure may take a variety of tool-engaging forms and may include one or more apertures of various shapes, such as a pair of spaced apart apertures or hex shape, or other geometric shape. The seat or base **149** of the drive feature **150** is disposed perpendicular to the axis A with the drive feature **150** otherwise being coaxial with the axis A. In operation, a driving tool is received in the internal drive feature **150**, being seated at the base **149** and engaging the faces of the drive feature **150** for both driving and rotating the shank body **6** into the vertebra **17**, either before the shank **4** is attached to the receiver **10** as shown in FIG. **42** or after the shank **4** is attached to the receiver **10**, with the shank body **6** being driven into the vertebra **17** with the driving tool extending into the receiver **10**.

The shank **4** shown in the drawings is cannulated, having a small central bore **151** extending an entire length of the shank **4** along the axis A. The bore **151** is defined by an inner cylindrical wall of the shank **4** and has a circular opening at the shank tip **128** and an upper opening communicating with the internal drive **150** at the surface **149**. The bore **151** is coaxial with the threaded body **6** and the upper portion **8**. The bore **151** provides a passage through the shank **4** interior for a length of wire (not shown) inserted into the vertebra **17** prior to the insertion of the shank body **6**, the wire providing a guide for insertion of the shank body **6** into the vertebra **17**.

To provide a biologically active interface with the bone, the threaded shank body **6** may be coated, perforated, made porous or otherwise treated. The treatment may include, but is not limited to a plasma spray coating or other type of coating of a metal or, for example, a calcium phosphate; or a roughening, perforation or indentation in the shank surface, such as by sputtering, sand blasting or acid etching, that allows for bony ingrowth or ongrowth. Certain metal coatings act as a scaffold for bone ingrowth. Bio-ceramic calcium phosphate coatings include, but are not limited to: alpha-tri-calcium phosphate and beta-tri-calcium phosphate ($Ca_3(PO_4)_2$), tetra-calcium phosphate ($Ca_4P_2O_9$), amorphous calcium phosphate and hydroxyapatite ($Ca_{10}(PO_4)_6(OH)_2$). Coating with hydroxyapatite, for example, is desirable as hydroxyapatite is chemically similar to bone with respect to mineral content and has been identified as being bioactive and thus not only supportive of bone ingrowth, but actively taking part in bone bonding.

With particular reference to FIGS. **18-25**, the receiver **10** has a generally U-shaped appearance with a partially discontinuous substantially cylindrical inner profile and a partially cylindrical and partially faceted outer profile. The receiver **10** has an axis of rotation B that is shown in FIG. **18** as being aligned with and the same as the axis of rotation A of the shank **4**, such orientation being desirable, but not required during assembly of the receiver **10** with the shank **4**. After the receiver **10** is pivotally attached to the shank **4**, either before or after the shank **4** is implanted in a vertebra **17**, the axis B is typically disposed at an angle with respect to the axis A, as shown, for example, in FIGS. **54-58**.

The receiver **10** includes a substantially cylindrical base **158** integral with a pair of opposed upstanding arms **160**. A cavity, generally **161**, is located within the base **158**. The arms **160** form a cradle and define a U-shaped channel **162** with an upper opening, generally **163**, and a U-shaped lower seat **164**, the channel **162** having a width for operably snugly receiving the rod **21** between the arms **160**. The channel **164** communicates with the base cavity **161**. Each of the arms **160** has an interior surface, generally **166** that has a cylindrical profile and further includes a partial helically wound guide and advancement structure **168** extending radially inwardly from the surface **166** and located adjacent top surfaces **169** of each of the arms **160**. In the illustrated embodiment, the guide and advancement structures **168** are each in the form of a partial helically wound interlocking flange form configured to mate under rotation with the dual start closure structure **18**. Thus, unlike single start advancement structures, the helical forms **168** on the opposing arm surfaces **166** that are configured to mate with the dual start closure top **18** are reverse or flipped images of one another, the structures **168** on each arm **160** being aligned with respect to the receiver axis B, so that each closure structure start and are simultaneously engaged and captured at each arm **160** at the same time.

The arms **160** further include an opposed pair of vertically extending outer grooves, generally **174**, running substantially parallel to the receiver axis B that are centrally formed in outer curved (illustrated as faceted, both curved and planar) surfaces **176**. Each groove **174** runs centrally from the respective arm top surface **169** and terminates at a through aperture **177**. Each aperture **177** extends through the respective arm surface **176** and also through the respective interior arm surface **166** and is located spaced from the receiver base **158**. Each groove **174** has an upper opening partially defined by a pair of opposed surfaces **179** and a substantially planar outer wall surface **181** extending between the surfaces **179**. The planar wall surface **181** terminates at the top arm surface **169** and at a lower surface **182** partially defining the aperture **177**. The illustrated opposed surfaces **179** are parallel and extend below the lower surface **182**, partially defining the through aperture **177**. The opposed surfaces **179** are sized to receive portions of an elongate tool (not shown) for locking and unlocking the insert **14** with respect to the receiver as will be described in greater detail below. In some embodiments, the surfaces **179** may be disposed at a slight angle with respect to each other, forming a dovetail-like space for maintaining a close relationship between an elongate tool (not shown) that enters into the groove **174** at the arm top surface **169** and is slidingly received between the surfaces **179**. The surfaces **179** terminate at a lower surface **183** that also partially defines the through aperture **177**. The surface **183** is substantially perpendicular to the surfaces **179**. Thus, the illustrated through aperture **177** located below each of the grooves **174** is substantially the same width as the groove **174** there-above, resulting in the aperture **177** having a substantially rectangular profile. The through apertures **177** are sized and shaped for receiving tooling and portions of the compression insert **14** as will be described in greater detail below.

With particular reference to FIGS. **19**, **22**, **24**, and **41**, formed in the arm surfaces **176** and located on either side of the through apertures **177** are lateral crimping apertures **186**. The four crimping apertures **186** are substantially circular in profile and do not extend completely through the respective arms **160**, but rather terminate at a location between the arm outer surface **176** and the interior surface **166** to provide a crimping portion or wall **187**. The crimping portions or walls **187** are sized and shaped for pressing or crimping some or all of the wall material inwardly onto front and rear surfaces of the insert **14** to prohibit rotation and misalignment of the insert **14** with respect to the receiver **10** as will be described in greater detail below.

The receiver **10** is a one-piece or integral structure and is devoid of any spring tabs or collet-like structures. Preferably the insert and/or receiver are configured with structure for blocking rotation of the insert with respect to the receiver, such as the crimp walls **187**, but allowing some up and down movement of the insert with respect to the receiver during the assembly and implant procedure. Also formed in each outer arm surface **176** near the top surface **169** is an undercut tool receiving and engaging groove **189**. Some or all of the apertures and grooves described herein, including, but not limited to grooves **174**, apertures **177**, and grooves **189** may be used for holding the receiver **10** during assembly with the insert **14**, the retainer **12** and the shank **4**; during the implantation of the shank body **6** into a vertebra when the shank is pre-assembled with the receiver **10**; during assembly of the bone anchor assembly **1** with the rod **21** and the closure structure **18**; and during lock and release adjustment of inserts according to the invention with respect to the receiver **10**, either into or out of frictional engagement with the inner surfaces of the receiver **10** as will be described in greater detail below. It is foreseen that tool receiving grooves or apertures may be configured in a variety of shapes and sizes and be disposed at other locations on the receiver arm **160** outer surfaces **176** and/or inner surfaces **166** as well as surfaces defining the base **158**.

Returning to the interior arm surfaces, generally **166**, of the receiver arms **160**, located below the discontinuous guide and advancement structure **168** is a discontinuous cylindrical surface **190** partially defining a run-out feature for the guide and advancement structure **168**. Adjacent to and above the surface **190** is a discontinuous upper annular ceiling surface **191**. The upper annular surface **191** includes the surface **182** that partially defines the aperture **177** and also includes bottom surfaces of the guide and advancement structure **168**. Also adjacent to and below the surface **190** is a discontinuous annular surface or step **192** that in turn is adjacent to a discontinuous frusto-conical surface **193** that extends from the surface **192** inwardly toward the receiver central axis B. Adjacent the surface **193** is another substantially cylindrical discontinuous surface **194** that may in some embodiments run frusto-conical either toward or away from the axis B, depending upon, for example, clearance requirements for the top loading of assembly components, such as the retainer and a compression insert or inserts and also modifying (enlarging or reducing) a thickness for the crimping walls **187**, if desired. In the current embodiment, the surface **194** terminates at a small discontinuous ledge or lip **195** directed inwardly toward the axis B. The through apertures **177** extend through both the cylindrical surfaces **190** and the surfaces **193** and **194**. A cylindrical surface **196** is adjacent to and runs downwardly from the lip **195** towards the base cavity **161**. A lower portion of the cylindrical surface **196** is continuous and thus partially defines the base cavity **61**. The cylindrical surface **196** has a diameter smaller than a diameter of the cylindrical surface **190**, but larger than a diameter of the surface **194**. The receiver inner arm surfaces **166** may further include other sloped, stepped or chamfered surfaces between the cylindrical surfaces **190**, **194**, and **196** as desired for ease in assembly of the other top loaded components.

With particular reference to FIGS. **23-25**, the continuous portion of the inner cylindrical surface **96** terminates at a downwardly sloping, annular ledge surface **197** that extends from the surface **196** and runs inwardly toward the receiver axis B. The surface **197** terminates at a substantially cylindrical surface **198**. The surface **198** terminates at another annular surface **199** that faces a lower portion of the receiver cavity **161**. The surfaces **197**, **198**, and **199** form an abutment or ceiling stop for the retainer **12** as will be described in greater detail below. The ceiling surface **199** runs substantially perpendicular to the axis B. Cut or otherwise formed into the surfaces **197**, **198**, and **199** under one of the arms **160** is a curved c-shaped notch, creating a substantially cylindrical surface **200** having a radius greater than a radius of the surface **198**, the opening partially defined by the surface **200** providing clearance within the assembly **1**, allowing the retainer **12** to move above the surface **197** when the shank **4** and attached retainer **12** are pivoted at a favored angle, for example, as shown in FIG. **58** and discussed in more detail below.

As stated above, the surface **199** is substantially annular and defines an upper ceiling or stop of a retainer **12** expansion portion or chamber of the inner cavity **161** that is further defined by a substantially spherical surface **202** that is adjacent to the surface **199**. The surface **202** partially defines a recess that is sized and shaped to receive the retainer **12** as it expands around the shank upper portion **8** as the shank **8** is moved upwardly toward the channel **162** during assembly. Located below and adjacent to the spherical surface **202** is another curved surface **203** extending downwardly and inwardly toward the axis B. The surface **203** is illustrated as spherical, but in some embodiments the surface may be frusto-conical. The surface **203** is a seating surface for the retainer **12**, the surface **203** slidingly receiving the retainer **12** until the retainer is frictionally locked against the surface **203** when downward pressure is placed on the shank **4** by the insert **14**. A cylindrical surface **204** is adjacent the spherical surface **203** and an outwardly flaring surface **205**, illustrated as frusto-conical, spans between the cylindrical surface **204** and a bottom surface **206** of the receiver **10**. The surface **205** communicating with the bottom surface **206** to define a lower opening, generally **207** into the receiver base inner cavity **161**. The cylindrical surface **204**, as well as the frusto-conical surface **203** are sized and shaped to be smaller than an upper outer radial dimension of the retainer **12** when the retainer **12** is fixed to the shank upper portion **8**, so as to form a restriction to prevent the structure **12** and attached shank portion **8** from passing through the cavity **161** and out the lower exterior **206** of the receiver **10** during operation thereof.

In various embodiments of the invention, a cut-out or aperture made of one or more notches or curved, cupped or stepped surfaces may be cut into or otherwise formed in a portion of the base surface **206**, as well as in portions of the surfaces **202**, **203**, **204**, and **205**, the cupped or stepped surfaces being typically located substantially centrally and directly below one of the arm **160**. Such a cupped or stepped surface or surfaces may be sized and shaped for providing clearance for an increased angle of articulation between the shank **4** and the receiver **10** in a particular or desired direction. In the present embodiment, one such arrangement of stepped surfaces, generally **208** is illustrated. In particular, the cut-out portion **208** includes a plurality of graduated, partially annular surfaces **209** connecting with a plurality of graduated partially planar and partially curved surfaces **210**, the surfaces **209** and **210** defining edges for gripping the shank **4** as shown, for example in FIG. **58**. The cut-out **208** is located directly below the cut-out portion **200** that provides clearance for the retainer **12** during such a favored angle pivoting of the shank **4** and attached retainer **12**.

With particular reference to FIGS. **18** and **26-29**, the open retainer **12** that operates to capture the shank upper portion **8** within the receiver **10** has a central axis C that is operationally the same as the axis A associated with the

shank **4** when the shank upper portion **8** and the retainer **12** are installed within the receiver **10**. The retainer **12** is made from a resilient material, such as a stainless steel or titanium alloy, so that the retainer **12** may be expanded during assembly as will be described in greater detail below. However, because there is little or no need to compress the retainer **12** during assembly, the opening or slit that allows for expansion of the retainer **12** is designed to be very narrow, advantageously providing substantial or almost full surface contact between the retainer and the shank upper portion **8** and also between the retainer and the receiver seating surface **203**.

The retainer **12** has a central channel or hollow through bore, generally **221**, that passes entirely through the structure **12** from a top surface **222** to a bottom surface **224** thereof. The bore **221** is primarily defined by a discontinuous inner cylindrical surface **225** that runs from the top surface **222** to the bottom surface **224**. In some embodiments of the invention, notches or grooves may be formed in the inner and/or bottom surfaces to more evenly distribute stress across the entire retainer during expansion thereof. The retainer **12** further includes an outer substantially spherical surface **227** running between the top surface **222** and the bottom surface **224**, the surface **227** has an identical or substantially similar radius as the receiver seating surface **203** and also the shank lower spherical surface **134**. The resilient retainer **12** further includes first and second end surfaces, **230** and **231** disposed in spaced relation to one another when the retainer is in a neutral state. Both end surfaces **230** and **231** are disposed substantially perpendicular to the top surface **222** and the bottom surface **224**. The embodiment shown in FIGS. **26-29** illustrates the surfaces **230** and **231** as substantially parallel, however, it is foreseen that it may be desirable to orient the surfaces obliquely or at a slight angle to the top and bottom surfaces.

With particular reference to FIGS. **18** and **30-36**, the locking compression insert **14** is illustrated that is sized and shaped to be received by and down-loaded into the receiver **10** at the upper opening **166**. The compression insert **14** has an operational central axis that is the same as the central axis B of the receiver **10**. In operation, the insert advantageously frictionally engages the bone screw shank upper portion **8** as well as engaging the receiver **10** in an interference fit engagement, locking the shank **4** in a desired angular position with respect to the receiver **10** that remains in such locked position even if, for example, a rod and closure top are later removed and the rod is replaced with another rod or other longitudinal connecting member or member component, such as a sleeve of a tensioned cord connecting member. Such locked position may also be released by the surgeon if desired with insert engaging tools (not shown). In some embodiments of the invention, an alternative insert is provided that does not have the receiver interference fit feature, but is otherwise substantially similar to the insert **14**. Such an insert includes outer surfaces that are slidingly received along the receiver **10** surfaces defining the arms **160** and the cavity **161**. The locking insert **14** (as well as the non-locking alternative insert not shown) is preferably made from a solid resilient material, such as a stainless steel or titanium alloy, so that portions of the insert **14** may be grasped, pinched or pressed, if necessary, and un-wedged from the receiver **10** with a release tool (not shown).

The locking compression insert **14** includes a body **256**. with cylindrical surfaces of a variety of diameters as well as planar surfaces and chamfers and cut-outs to provide clearance between the insert **14** and the retainer **12** during various steps of assembly as well as when the assembly **1** is in a final locked position. The body **256** is integral with a pair of upstanding arms **257**. Located between the arms **257**, the body **256** has an outer partial cylindrical surface **258**. Each arm outer surface is substantially cylindrical in profile but is made from a variety of facets or faces as well as cut-outs to provide for clearance with other components of the assembly **1**. Located on the body **256** below each upstanding arm **257** is a substantially cylindrical interference fit surface or band **159** that extends outwardly from and between an upper cylindrical surface **260** and a lower cylindrical surface **261**. The lower surface **261** is adjacent to an annular bottom surface **264** of the insert **14**. Each upper cylindrical surface **260** partially defines one of the insert arms **257**. The interference fit band **159** runs substantially parallel to the bottom surface **264**. A diameter of the insert **14** measured at the band surface **259** is larger than a diameter measured at surfaces **260** or **261**. As best shown in FIG. **36**, in the illustrated embodiment, the bottom surface **264** is disposed at an angle with respect to the lower surface **261**, but may be perpendicular to the lower surface **261** in other embodiments. The insert **14** further includes substantially planar arm top surfaces **265** located opposite the bottom surface **264**. The arms **257** are each further defined by substantially planar front and rear surfaces **266** that run from the top surfaces **265** to the bottom surface **264**. At the bottom surface **264**, the front and rear surfaces **266** are narrow due to clearance cut-outs **267** located at each corner of the insert **14**. Each arm **257** also includes an outwardly extending wing, generally **268** located centrally on and extending outwardly from an upper cylindrical surface **269** of the arm **257**, the surface **269** being adjacent to the arm top surface **265**. Each arm top surface **265** also extends along the respective wing **268** to a substantially cylindrical outer surface **270**. Each wing is also defined by a lower surface **271** and opposed planar side surfaces **272**, the upper surfaces **265** and the lower surfaces **271** being substantially parallel to one another. The juncture between the planar side surfaces **272** and the cylindrical surface **270** may include one or more chamfered, planed, or otherwise angled or curved surface to aid in rotational assembly of the insert **14** within the receiver **10**. The opposed side surfaces **272** generally span between top and bottom surfaces **265** and **271** respectively, of each wing **268**, the side surfaces **272** being substantially perpendicular to adjacent top and bottom surfaces **265** and **271**. The cylindrical surfaces **270** are sized and shaped for sliding rotation within the receiver arm cylindrical surfaces **190** during assembly of the insert **14** with the receiver **10** as will be described in greater detail below. The illustrated wings **268** include indicator stripes **273** that provide a surgical staff with an indication of the location of the insert **14** with respect to the receiver **10** during surgery. For example, the location of the stripe **273** with respect to the receiver **10** indicates whether the insert **14** is in a non-floppy, but movable, frictional engagement with the shank head **8** or whether the insert **14** is fully locked down on the shank head **8**. The indicator stripes **273** are conveniently located on the wing cylindrical surface **270** that is visible when the wings **268** are extending through the receiver apertures **177**.

Returning to the inner surfaces of the insert **14**, a through bore, generally **275**, is disposed primarily within and through the body **256** and communicates with a generally U-shaped through channel formed by a saddle surface **278** that is substantially defined by the upstanding arms **257**. Near the top surfaces **265**, the saddle surface **278** is substantially planar. The saddle **278** has a curved lower seat **279** sized and shaped to closely, snugly engage the rod **21** or other longitudinal connecting member. It is foreseen that an

alternative embodiment may be configured to include planar holding surfaces that closely hold a square or rectangular bar as well as hold a cylindrical rod-shaped, cord, or sleeved tensioned cord longitudinal connecting member. A pair of opposed, inwardly facing grooves or apertures **280** are located in the saddle **278** beginning near a juncture of the substantially planar upper portion of the saddle **278** and extending toward the curved lower seat **279**. The grooves **280** are sized and shaped to receive tooling for rotation, locking, unlocking and other manipulation of the insert **14**.

The bore, generally **275**, is substantially defined at the body **256** by an inner cylindrical surface **282** that communicates with the seat **279** and also communicates with a lower concave, radiused or otherwise curved portion **284**, that in some embodiments may include shank gripping surfaces or ridges, the surface portion **284** generally having a radius for closely mating with the surface **144** of the shank upper portion **8**. The portion **284** terminates at the base surface **264**. It is foreseen that the lower shank engaging portion **284** may additionally or alternatively include a roughened or textured surface or surface finish, or may be scored, knurled, or the like, for enhancing frictional engagement with the shank upper portion **8**. Formed in a portion of the surface **284** and in a portion of the bottom surface **264** is a notch **286** sized and shaped to receive a portion of the retainer **12** when the shank **4** and attached retainer **12** are pivoted into a favored angle position as shown, for example, in FIG. **58**. The notch **286** is located directly beneath one of the arms **257** and has a geometry for receiving a portion of the top **222** and outer spherical surface **227** of the retainer **12** when the shank upper portion **8** is fully locked into place by the insert surface **284** and the shank **4** is pivoted toward the receiver cut-out **208**.

The compression insert **14** through bore **275** is sized and shaped to receive a driving tool (not shown) therethrough that engages the shank drive feature **146** when the shank body **6** is driven into bone with the receiver **10** attached. Also, in some locking embodiments of the invention, the bore receives a manipulation tool (not shown) used for releasing the insert **14** from a locked position with the receiver **10**, the tool pressing down on the shank head **8** and also gripping the insert **14** at the apertures **280**, or with other tool engaging features. Each of the arms **257** and the insert body **256** may include more surface features, such as cutouts notches, bevels, etc. to provide adequate clearance for inserting the insert **14** into the receiver and cooperating with the retainer **12** during the different assembly steps as will be described in greater detail below.

The insert body **256** cylindrical surface **258** has a diameter slightly smaller than a diameter between crests of the guide and advancement structure **168** of the receiver **10**, allowing for top loading of the compression insert **14** into the receiver opening **163**, with the arms **257** of the insert **14** being located between the receiver arms **160** during insertion of the insert **14** into the receiver **10** as shown, for example, in FIG. **38**. Once the arms **257** of the insert **14** are generally located beneath the guide and advancement structure **168**, the insert **14** is rotated into place about the receiver axis B with the wings **268** entering the receiver groove formed by the cylindrical surface **190**, the adjacent upper annular surface **191** and the adjacent lower annular surface **192** until the wings **268** are located in the apertures **177** as will be described in greater detail below.

With reference to FIGS. **18** and **48-50**, the illustrated elongate rod or longitudinal connecting member **21** (of which only a portion has been shown) can be any of a variety of implants utilized in reconstructive spinal surgery, but is typically a cylindrical, elongate structure having the outer substantially smooth, cylindrical surface **22** of uniform diameter. The rod **21** may be made from a variety of metals, metal alloys and deformable and less compressible plastics, including, but not limited to rods made of elastomeric, polyetheretherketone (PEEK) and other types of materials, such as polycarbonate urethanes (PCU) and polyethylenes.

Longitudinal connecting members for use with the assembly **1** may take a variety of shapes, including but not limited to rods or bars of oval, rectangular or other curved or polygonal cross-section. The shape of the insert **14** may be modified so as to closely hold the particular longitudinal connecting member used in the assembly **1**. Some embodiments of the assembly **1** may also be used with a tensioned cord. Such a cord may be made from a variety of materials, including polyester or other plastic fibers, strands or threads, such as polyethylene-terephthalate. Furthermore, the longitudinal connector may be a component of a longer overall dynamic stabilization connecting member, with cylindrical or bar-shaped portions sized and shaped for being received by the compression insert **14** of the receiver having a U-shaped, rectangular- or other-shaped channel, for closely receiving the longitudinal connecting member. The longitudinal connecting member may be integral or otherwise fixed to a bendable or damping component that is sized and shaped to be located between adjacent pairs of bone screw assemblies **1**, for example. A damping component or bumper may be attached to the longitudinal connecting member at one or both sides of the bone screw assembly **1**. A rod or bar (or rod or bar component) of a longitudinal connecting member may be made of a variety of materials ranging from deformable plastics to hard metals, depending upon the desired application. Thus, bars and rods of the invention may be made of materials including, but not limited to metal and metal alloys including but not limited to stainless steel, titanium, titanium alloys and cobalt chrome; or other suitable materials, including plastic polymers such as polyetheretherketone (PEEK), ultra-high-molecular weight-polyethylene (UHMWP), polyurethanes and composites, including composites containing carbon fiber, natural or synthetic elastomers such as polyisoprene (natural rubber), and synthetic polymers, copolymers, and thermoplastic elastomers, for example, polyurethane elastomers such as polycarbonate-urethane elastomers.

Preferably, the receiver **10**, the retainer **12** and the compression insert **14** are assembled at a factory setting that includes tooling for holding, alignment and manipulation of the component pieces, as well as crimping a portion of the receiver **10** toward the insert **14**. In some circumstances, the shank **4** is also assembled with the receiver **10**, the retainer **12** and the compression insert **14** at the factory. In other instances, it is desirable to first implant the shank **4**, followed by addition of the pre-assembled receiver, retainer and compression insert at the insertion point (see, e.g., FIG. **42**). In this way, the surgeon may advantageously and more easily implant and manipulate the shanks **4**, distract or compress the vertebrae with the shanks and work around the shank upper portions or heads without the cooperating receivers being in the way. In other instances, it is desirable for the surgical staff to pre-assemble a shank of a desired size and/or variety (e.g., surface treatment of roughening the upper portion **8** and/or hydroxyapatite on the shank **6**), with the receiver, retainer and compression insert. Allowing the surgeon to choose the appropriately sized or treated shank **4** advantageously reduces inventory requirements, thus reducing overall cost.

Pre-assembly of the receiver **10**, retainer **12** and compression insert **14** is shown in FIGS. **37-41**. With particular reference to FIG. **37**, first the retainer **12** is inserted into the lower receiver opening **207**, leading with the outer surface **227**, the top surface **222** slightly angled to face upwardly and toward one arm **160** that is located above the stepped, cut-out **208**. The retainer **12** is then moved upwardly and at an angle toward the annular ceiling surface **199** located opposite the cut-out surface **200** and then past the stepped cut-out **298** in such an angled and upward manner into the chamber **161**, followed by tilting the retainer **12** such that the top surface **222** is moved into a position within the receiver cavity **161** axially aligned with the receiver axis B and spaced from the surface **199**. Then the retainer **12** is allowed to drop until the retainer spherical surface **227** is seated on the receiver spherical surface **203** as shown in FIG. **38**.

Also with reference to FIG. **38** and with further reference to FIGS. **39** and **40**, the. compression insert **14** is then downloaded into the receiver **10** through the upper opening **163** with the bottom surface **264** initially facing the receiver arm top surfaces **169** and the insert arms **257** located between the opposed receiver arms **160**. The insert **14** is then lowered toward the channel seat **164** until the insert **14** arm upper surfaces **265** are adjacent the receiver arm inner surfaces located below the guide and advancement structures **168**. Thereafter, the insert **14** is rotated in a clockwise or counter-clockwise manner about the receiver axis B until the upper arm surfaces **265** are directly below the guide and advancement structure **168** of each arm as illustrated in FIG. **40** with the U-shaped channel **278** of the insert **14** aligned with the U-shaped channel **162** of the receiver **10**. In some embodiments, the insert arms **257** may need to be compressed slightly during rotation to clear inner surfaces of the receiver arms **160**. As the insert **14** is rotated about the axis B, the insert wings, generally **268** slidingly rotate within the circular groove formed by the receiver surfaces **190**, **191**, and **192**.

With particular reference to FIGS. **40** and **41**, at this time, the four crimping wall portions **187** are pressed inwardly towards the insert **14** and crimping wall material thus engages the insert near front and rear surfaces **266** thereof, specifically at the four surfaces or facets **267** as best shown in FIG. **41**. The crimping wall material of the wall **187** pressing against the insert **14** at a total of four locations thereby prohibits the insert **14** from rotating with respect to the receiver axis B. At this time, there can be some upward and downward movement of the insert **14**, but such movement is limited as the upper wall **182** defining the receiver aperture **177** (that is also the surface **191**) stops further upward movement of the insert wings **268**. Downward movement of the insert **14** is prohibited by the bands **259** resting on receiver ledge surface **195** adjacent the cylindrical surface **196**. The retainer **12** and the insert **14** are now in a desired position for shipping as an assembly along with the separate shank **4** and also ready for assembly with the shank **4** either at the factory, by surgery staff prior to implantation, or directly upon an implanted shank **4** as will be described herein.

As illustrated in FIG. **42**, the bone screw shank **4** or an entire assembly **1** made up of the assembled shank **4**, receiver **10**, retainer **12** and compression insert **14**, is screwed into a bone, such as the vertebra **17**, by rotation of the shank **4** using a suitable driving tool (not shown) that operably drives and rotates the shank body **6** by engagement thereof at the internal drive **150**. Specifically, the vertebra **17** may be pre-drilled to minimize stressing the bone and have a guide wire (not shown) inserted therein to provide a guide for the placement and angle of the shank **4** with respect to the vertebra. A further tap hole may be made using a tap with the guide wire as a guide. Then, the bone screw shank **4** or the entire assembly **1** is threaded onto the guide wire utilizing the cannulation bore **151** by first threading the wire into the opening at the bottom **128** and then out of the top opening at the drive feature **150**. The shank **4** is then driven into the vertebra using the wire as a placement guide. It is foreseen that the shank and other bone screw assembly parts, the rod **21** (also having a central lumen in some embodiments) and the closure top **18** having the central bore **62** can be inserted in a percutaneous or minimally invasive surgical manner, utilizing guide wires. When the shank **4** is driven into the vertebra **17** without the remainder of the assembly **1**, the shank **4** may either be driven to a desired final location or may be driven to a location slightly above or proud to provide for ease in assembly with the pre-assembled receiver, compression insert and retainer.

With further reference to FIG. **42**, the pre-assembled receiver, insert and retainer are placed above the shank upper portion **8** until the shank upper portion is received within the opening **207**. With particular reference to FIGS. **43-45**, as the shank upper portion **8** is moved into the interior **161** of the receiver base, the shank upper portion **8** presses upwardly against the retainer **12** in the recess partially defined by the spherical surface **202**. As the portion **8** continues to move upwardly toward the channel **162**, the shank surface **144** forces outward movement of the retainer **12** towards the surface **202** in the receiver expansion chamber or area as the shank **4** presses the retainer **12** up against the receiver annular ledge surface or ceiling **199**. The retainer **12** initially expands about the shank upper spherical surface **144** and then slides along the cylindrical surface **142**, and finally snapping or popping into the recessed cylindrical surface **138**, the surface **225** of the retainer **12** fully contacting and frictionally engaging the cylindrical surface **138** between the shank lower ledge **136** and the upper ledge **140**. At this time, the retainer **12** is in a neutral or slightly expanded state, fully snapped onto the shank upper portion **8** with both the retainer **12** and shank upper portion **8** in pivotal relation with the receiver **10**.

With reference to FIG. **46**, the shank **4** and attached retainer **12** are then moved downwardly into a desired position with the retainer seated on the surface **203**. With reference to FIG. **47**, the insert **14** may be pressed downwardly by a tool (not shown) entering at the receiver grooves **174**, for example, and pressing down on the insert wings **268**, to result in a frictional engagement between the insert inner spherical surface **284** and the shank upper domed surface **144** to an extent that the shank is pivotable with respect to the receiver, but in a non-floppy manner. The insert **14** remains in such position due to interference fit engagement between the insert outer band surfaces **259** and the receiver cylindrical surfaces **196**. Alternatively, the insert **14** may be pushed into such interference fit by a rod **21** and closure top **18**. Typically, tools are first used to provide the non-floppy arrangement between the insert **14** and the shank head **8**, followed by performing a locking engagement utilizing the rod **21** and closure top **18** as shown in FIG. **48**. In some embodiments, when the receiver **10** is pre-assembled with the shank **4**, the entire assembly **1** may be implanted after the insert **14** is pressed into non-floppy frictional engagement with the shank head **8** by inserting the driving tool (not shown) into the receiver and the shank drive **150** and rotating and driving the shank **4** into a desired location of the vertebra **17**.

Again, with reference to FIG. **48** and also FIG. **49**, the rod **21** is eventually positioned in an open or percutaneous manner in cooperation with the at least two bone screw assemblies **1**. The closure structure **18** is then inserted into and advanced between the arms **160** of each of the receivers **10**. The closure structure **18** is rotated, using a tool engaged with the inner drive **56** until a selected pressure is reached at which point the rod **21** engages the U-shaped seating surface **278** of the compression insert **14**, further pressing the insert spherical surface **284** against the shank spherical surface **144**, pressing the shank upper portion **8** and attached retainer **12** into locked frictional engagement with the receiver **10**. With specific reference to FIGS. **3**, **48**, and **49**, as the multi-start closure structure **18** rotates and moves downwardly into the respective receiver **10**, the rim **60** engages and penetrates the rod surface **22**, the closure structure **18** pressing downwardly against and biasing the rod **21** into compressive engagement with the insert **14** that urges the shank upper portion **8** and attached retainer **12** into locking engagement with the receiver, the retainer **12** spherical surface **227** frictionally abutting the spherical seating surface **203** of the receiver **10**. For example, about 80 to about 120 inch pounds of torque on the closure top may be applied for fixing the bone screw shank **6** with respect to the receiver **10**. Also, for example, with reference to FIGS. **52-58**, when the shank **4** is disposed at an angle with respect to the receiver **10**, the lower spherical surface **134** of the shank upper portion **8** may also be in frictional engagement with a portion of the receiver spherical seating surface **203**. The retainer **12** may also expand slightly upon locking, providing a full and secure frictional locking engagement with the receiver at the surface **203**.

If removal of the rod **21** from any of the bone screw assemblies **1** is necessary, or if it is desired to release the rod **21** at a particular location, disassembly is accomplished by using the driving tool (not shown) that mates with the internal drive **56** on the closure structure **18** to rotate and remove such closure structure from the cooperating receiver **10**. Disassembly is then accomplished in reverse order to the procedure described previously herein for assembly.

With further reference to FIG. **49** and also with reference to FIG. **50**, at this time, the closure top **18** may be loosened or removed and/or the rod **21** may be adjusted and/or removed and the frictional engagement between the insert **14** and the receiver **10** at the receiver surface **196** will remain locked in place, advantageously maintaining a locked angular position of the shank **4** with respect to the receiver **10**. Thus, at this time, another rod, such as the deformable rod **21'** and cooperating alternative multi-start closure top **18'** may be loaded onto the already locked-up assembly to result in an alternative assembly. It is noted that the closure drive **56'** may advantageously be made smaller than the drive of the closure **18**, such that the deformable rod **21'** is not unduly pressed or deformed during assembly since the polyaxial mechanism is already locked.

With reference to FIGS. **51-58**, prior to locking the insert **14** against the shank head **8**, the shank **4** may be pivoted to a plurality of potentially desirable positions with respect to the receiver **10**, followed by locking of the polyaxial mechanism by fully mating the multi-start closure top **18** with the receiver **10**. For example, different angular or articulated positions of the shank **4** with respect to the receiver **10** are shown, some making full use of the stepped cut-out **208** and the c-shaped groove forming the surface **200** of the receiver and/or the notch **286** of the insert **14**. For reference, FIG. **51** illustrates a zero degree relationship between the shank **4** and the receiver **10**. In other words, the axis A of the shank is aligned with the axis B of the receiver. FIG. **52** shows the shank **4** pivoted laterally of the receiver cut-out portion **208** in an eighteen degree cephalic relationship. FIG. **53** shows the shank **4** pivoted away from the receiver cut-out portion **208** in an eighteen degree caudal relationship. FIG. **54** illustrates the shank **4** being pivoted with respect to the receiver **10** at an eighteen degree lateral relationship. FIG. **55** shows the shank **4** pivoted toward the receiver cut-out portion **208** at a forty-two degree medial by eight degree cephalic relationship. FIG. **56** shows the shank **4** pivoted toward the receiver cut-out portion **208** at a forty-two degree medial relationship. FIGS. **57** and **58** show the shank **4** pivoted toward the receiver cut-out portion **208** at a forty-two degree medial by eight degree caudal relationship. FIG. **58** also shows that in such a pivoted relationship between the shank **4** and the receiver **10**, a portion of the retainer **12** moves past the receiver surface **200** and is received by the notch **286** in the insert **14**.

With reference to FIGS. **9** and **10**, an alternative closure top **18'** is shown that is almost identical to the closure top **18**. However, the top **18'** differs from the top **18** in that the top **18'** includes a break-off head **70'** that further includes a top surface **72'** having tooling notches **73'**, an outer faceted driving surface **74'**, illustrated as having a hex-shaped profile, and an inner bore **76'**. Otherwise, the closure top **18'** includes a body **40'**, a first helical form **42'**, a second helical form **43'**, a body top surface **54'**, a body internal drive **56'**, a base **58'**, a rim **60'**, a cannulation bore **62'** and a drive base surface **63'** that is the same or substantially similar to the respective body **40**, first helical form **42**, second helical form **43**, body top surface **54**, internal drive **56**, base **58**, rim **60**, cannulation bore **62** and drive base surface **63** previously described herein with respect to the closure top **18**. The break-off head **70'** is integral with the body **40'** at the body top surface **54'**. The inner bore **76'** communicates with the inner drive **56'** and the cannulation bore **62'**. The break-off head **70'** is designed to allow such head **70'** to break from the body **40'** at or near the top surface **54'** at a preselected torque, for example, 70 to 140 inch pounds, when a hex-shaped tool (not shown) engages the outer surfaces **74'** and drives the closure structure **18'** into the receiver **10** as shown in FIG. **9**. The inner drive **56'** is used for disassembly or loosening of the closure **18'** from the receiver **10**, and re-tightening, if needed.

With reference to FIG. **11**, another alternative multi-start closure top **318** is shown that is almost identical to the closure top **18** with the exception that the two flange forms **42** and **43** with respective starts **46** and **47** have been replaced with square threads **342** and **343** with respective starts **346** (not shown) and **347**. Otherwise, the dual or double start closure top **318** includes a body **340**, a body top surface **354**, a body internal drive **356**, a base **358**, a rim **360'**, a cannulation bore **362** and a drive base surface **363** that is the same or substantially similar to the respective body **40**, body top surface **54**, internal drive **56**, base **58**, rim **60**, cannulation bore **62** and drive base surface **63** previously described herein with respect to the closure top **18**. In FIG. **11**, the closure top **318** is shown partially wound into a polyaxial bone screw receiver **310** having opposed arms **360** with inner surfaces equipped with guide and advancement structures **368** that are sized and shaped to simultaneously closely receive and mate with the square threads **342** and **343** of the double closure structure **318**. Otherwise, the receiver **310** is identical or substantially similar to the receiver **10**.

With reference to FIG. **12**, an alternative multi-start closure top **418** is shown that is almost identical to the

closure top **18** with the exception that the two flange forms **42** and **43** with respective starts **46** and **47** have been replaced with reverse angle threads **442** and **443** with respective starts **446** (not shown) and **447**. Otherwise, the dual or double start closure top **418** includes a body **440**, a body top surface **454**, a body internal drive **456**, a base **458**, a rim **460'**, a cannulation bore **462** and a drive base surface **463** that is the same or substantially similar to the respective body **40**, body top surface **54**, internal drive **56**, base **58**, rim **60**, cannulation bore **62** and drive base surface **63** previously described herein with respect to the closure top **18**. The closure top **418** is shown partially wound into a polyaxial bone screw receiver **410** having opposed arms **460** with inner surfaces equipped with guide and advancement structures **468** that are sized and shaped to simultaneously closely receive and mate with the reverse angle threads **442** and **443** of the double start closure structure **418**. Otherwise, the receiver **410** is identical or substantially similar to the receiver **10**.

With reference to FIG. **13**, another alternative multi-start closure top **518** is shown that is almost identical to the closure top **18** with the exception that the two flange forms **42** and **43** with respective starts **46** and **47** have been replaced with v-threads **542** and **543** with respective starts **546** (not shown) and **547**. Otherwise, the dual or double start closure top **518** includes a body **540**, a body top surface **554**, a body internal drive **556**, a base **558**, a rim **560'**, a cannulation bore **562** and a drive base surface **563** that is the same or substantially similar to the respective body **40**, body top surface **54**, internal drive **56**, base **58**, rim **60**, cannulation bore **62** and drive base surface **63** previously described herein with respect to the closure top **18**. The closure top **518** is shown partially wound into a polyaxial bone screw receiver **510** having opposed arms **560** with inner surfaces equipped with guide and advancement structures **568** that are sized and shaped to simultaneously closely receive and mate with the threads **542** and **543** of the double start closure structure **518**. Otherwise, the receiver **510** is identical or substantially similar to the receiver **10**.

With reference to FIG. **14**, another alternative multi-start closure top **618** is shown that is almost identical to the closure top **18** with the exception that the two flange forms **42** and **43** with respective starts **46** and **47** have been replaced with buttress threads **642** and **643** with respective starts **446** and **447** (not shown). Otherwise, the dual or double start closure top **618** includes a body **640**, a body top surface **654**, a body internal drive **656**, a base **658**, a rim **660'**, a cannulation bore **662** and a drive base surface **663** that is the same or substantially similar to the respective body **40**, body top surface **54**, internal drive **56**, base **58**, rim **60**, cannulation bore **62** and drive base surface **63** previously described herein with respect to the closure top **18**. The closure top **618** is shown partially wound into a polyaxial bone screw receiver **610** having opposed arms **660** with inner surfaces equipped with guide and advancement structures **668** that are sized and shaped to simultaneously closely receive and mate with the buttress threads **642** and **643** of the double start closure structure **618**. Otherwise, the receiver **610** is identical or substantially similar to the receiver **10**.

With reference to FIGS. **15** and **16**, an open receiver **710** is illustrated that is substantially similar to the receiver **10** previously described herein with the exception that the receiver **710** includes opposed arms **760**, each having an integral upstanding break-off extension **761**. Each receiver arm **760** and integral extension **761** has an inner helically wound guide and advancement structure **768** that is sized and shaped to mate with the flange forms **42** and **43** of the dual start closure **18** previously described herein. The break-off extensions **761** are initially integral with the respective arms **760** and are then broken off by a user after the closure **18** has been rotatingly advanced along the arm extensions **761** and into the channel located between the receiver arms **760**. In the illustrated embodiment, in addition to an outer groove or notch **770** located at or near a top surface **769** of each of the arms **760** where the extensions **761** break off from the receiver arms, illustrated inner arm surfaces include a recess or cut **771**, best shown in FIG. **16**, that runs substantially horizontally. Each recess **771** is curved and elongate and disposed somewhat cross-wise or transverse to the respective flange form **768**. For example, with reference to the arm **760** shown in FIG. **16**, the recess **771** cuts into a weakened region, generally **780**, where the arm **760** joins with the respective attached adjacent extension **761**, the curved and elongate recess **771** beginning at a lower portion or location **781** of the flange form recess or segment and terminating at an opposed upper end location of the flange form segment, while otherwise leaving the flange form **768** intact. Stated in another way, the substantially horizontally extending recess **771** cuts into both a lead portion and a trailing portion of each of the flange form segments located near and directly above the opposed arms **760** and substantially opposite the notch **770**, thus further weakening the region where the extension and the arm attach, without destroying the flange form path, so that the closure **18** is not derailed by the recess **771** or otherwise prohibited from moving downwardly into the receiver channel formed between the receiver arms **760**.

With reference to FIG. **17**, the multi-start closure **18** is shown cooperating with a spinal implant receiver, such as a bone screw receiver **10'** and a discrete, detachable guide tool **801**. The elongate guide tool **801**, only partially shown in FIG. **17**, is typically sized for extending from the bone screw receiver **10'** upwardly to a location outside of a patient, the tool providing a guide channel for operably guiding the rod **21** or other longitudinal connecting member from a position exterior of the bone screw receiver **10'** toward and into the bone screw receiver **10'**. The illustrated guide tool has opposed arms **805**, each arm having a helical guide and advancement structure **810** thereon that is illustrated as a square thread form, but may be of other geometry, including a flange form the same or similar to the flange forms **168'** of the receiver **10'** that mates with the flange forms **42** and **43** of the closure structure **18**. Thus, the illustrated structures **810** are sized and shaped for receiving and rotating engagement with a dual start closure. The closure **18** is shown partially wound into the receiver **10'** that is identical or substantially similar to the receiver **10** with the exception of certain outer arm surface features (not shown). Thus, the receiver **10'** includes opposed arms **160'** with inner surfaces having guide and advancement structures **168'** that are sized and shaped to simultaneously closely receive and mate with the flange forms **42** and **43** of the dual start closure structure **18**. The guide tool **801** includes attachment structure for detachable attachment to the receiver **10'**(not shown), that may take a variety of forms and methods, including, but not limited to a slide-on, slide-off attachment, a snap-on, rotate off attachment, a rotate-on and rotate-off attachment, to name a few. For example, cooperating attachment structure for both the tool and the receiver may be used that is disclosed in U.S. Pat. No. 7,470,279 and incorporated by reference herein. Returning to the inner helically wound guide and advancement structure **810** formed on each arm **804** of the guide tool **801**, the structure **810** is sized and shaped for being aligned with the receiver arms **160'** during

removable attachment of the tool **801** with the respective bone screw receiver **10'** so as to continue the helical pathway for the closure **18**, the structures **810** being synchronized with the flange forms **168'** to allow for the rotation and driving transfer of the closure **18** from the tool **801** into the receiver **10'**.

It is to be understood that while certain forms of the present invention have been illustrated and described herein, it is not to be limited to the specific forms or arrangement of parts described and shown.

The invention claimed is:

1. A medical implant assembly comprising:

a receiver having a longitudinal axis, a first arm, and a second arm, the first and the second arms each extending in the same direction as the longitudinal axis and having a top side surface and an outer side face surface;

a channel formed by the first arm and the second arm and opening between a front outer face surface adjacent the channel and a back outer face surface adjacent the channel opposite the front outer face surface of the receiver, the channel adapted to receive a longitudinal connecting member, the channel configured to be closed with a closure having an axis of rotation;

a first interior surface of the first arm opposite the outer side face surface thereof;

a second interior surface of the second arm opposite the outer side face surface thereof;

a first discontinuously helically wound structure on the first interior surface of the first arm, the first discontinuously helically wound structure configured to engage a first start structure of a first continuously helically wound thread form disposed on the closure, the first start structure having a leading face with a concave surface portion and a convex surface portion;

a second discontinuously helically wound structure on the second interior surface of the second arm, the second discontinuously helically wound structure configured to engage a second start structure of a second continuously helically wound thread form disposed on the closure, the second start structure having a leading face with a concave surface portion and a convex surface portion, a rotation of the closure about the axis of rotation between the first arm and the second arm configured to cause a simultaneous mating of the first start structure under the first discontinuously helically wound structure and the second start structure with the second discontinuously helically wound structure due to a diametrically timed positioning of the first and second start structures on the closure, the closure configured to be rotationally advanced within the channel until the bottom surface engages and locks the longitudinal connecting member within the channel; and

the first and second arm outer side face surfaces each having a curvate extending groove configured to be engaged by an instrument, each groove extending horizontally to at least one of the front or back outer face surface of each arm and being located adjacent the top side surface on each arm, wherein an entirety of each groove is configured to be located above a top surface of the longitudinal connecting member when the longitudinal connecting member is received and locked in the channel by the closure.

2. The medical implant assembly of claim **1**, wherein each groove includes an outer facing surface.

3. The medical implant assembly of claim **2**, wherein the outer facing surfaces of the grooves extend in a direction parallel to the longitudinal axis.

4. The medical implant assembly of claim **1**, wherein each groove includes a downward facing surface.

5. The medical implant assembly of claim **4**, wherein the downward facing surfaces of the grooves are planar.

6. The medical implant assembly of claim **5**, wherein each downward facing surface of the grooves are parallel with one another.

7. The medical implant assembly of claim **1**, wherein each groove includes an upward facing surface.

8. The medical implant assembly of claim **7**, wherein the upward facing surfaces of the grooves are planar.

9. The medical implant assembly of claim **8**, wherein each upward facing surface of the grooves are parallel with one another.

10. The medical implant assembly of claim **1**, wherein a vertical slot extends between the groove on the respective outer side face surface.

11. The medical implant assembly of claim **10**, wherein each vertical slot extends to the respective top side surface of each arm.

12. The medical implant assembly of claim **10**, wherein each vertical slot includes an aperture in communication with the channel.

13. The medical implant assembly of claim **1**, wherein the first and second discontinuously helically wound structure comprises one of a reverse angle thread, a square thread, a buttress thread, or a helical flange form.

14. The medical implant assembly of claim **1**, wherein the first and second arm each has a breakoff extension.

15. The medical implant assembly of claim **1**, wherein each outer side face surface has an outward facing planar surface.

16. The medical implant assembly of claim **15**, wherein the outward facing planar surface on each arm is recessed and parallel with respect to the longitudinal axis of the receiver and to each other.

17. The medical implant assembly of claim **1**, further including an insert configured to be top loaded into the receiver, the insert having first and second opposed upright arms with top surfaces and lateral protrusions with top surfaces contiguous with the top surfaces on the upright arms of the insert.

18. The medical implant assembly of claim **1**, wherein the receiver includes a central bore having a recess into which an insert is configured to be at least partially positioned by being down loaded into the receiver through the channel.

19. The medical implant assembly of claim **18**, wherein the insert is a retainer configured to engage a head of a bone attachment shank.

20. The medical implant assembly of claim **1**, wherein each of the leading faces on the first and the second start structures has a concave surface adjacent a root and a convex surface adjacent a crest of the respective first and second continuously helically wound structures.

* * * * *