US006726689B2

(12) **United States Patent**
Jackson

(10) **Patent No.: US 6,726,689 B2**
(45) **Date of Patent: Apr. 27, 2004**

(54) **HELICAL INTERLOCKING MATING GUIDE AND ADVANCEMENT STRUCTURE**

(76) Inventor: **Roger P. Jackson**, 4706 W. 86th St., Prairie Village, KS (US) 66207

(*) Notice: Subject to any disclaimer, the term of this patent is extended or adjusted under 35 U.S.C. 154(b) by 0 days.

(21) Appl. No.: **10/236,123**

(22) Filed: **Sep. 6, 2002**

(65) **Prior Publication Data**

US 2004/0049196 A1 Mar. 11, 2004

(51) **Int. Cl.**[7] **A61B 17/56**; F16B 35/04
(52) **U.S. Cl.** **606/73**; 606/61; 411/411
(58) **Field of Search** 606/73, 61; 411/378, 411/393, 411, 416; 285/332.3

(56) **References Cited**

U.S. PATENT DOCUMENTS

3,640,416 A		2/1972	Temple	
4,373,754 A		2/1983	Bollfrass et al.	
4,600,224 A	*	7/1986	Blose	285/334
4,703,954 A	*	11/1987	Ortloff et al.	285/115
4,707,001 A		11/1987	Johnson	
5,005,562 A		4/1991	Cotrel	
5,022,791 A		6/1991	Isler	
5,092,635 A		3/1992	DeLange et al.	
5,129,388 A		7/1992	Vignaud et al.	
5,154,719 A		10/1992	Cotrel	
5,176,483 A		1/1993	Baumann et al.	
5,217,497 A		6/1993	Mehdian	
5,275,601 A		1/1994	Gogolewski et al.	
5,321,901 A		6/1994	Kelly	
5,358,289 A		10/1994	Banker et al.	
5,427,418 A		6/1995	Watts	
5,545,165 A		8/1996	Biedermann et al.	
5,562,663 A		10/1996	Wisnewski et al.	
5,601,553 A		2/1997	Trebing et al.	
5,607,304 A		3/1997	Bailey et al.	
5,641,256 A		6/1997	Gundy	
5,643,261 A		7/1997	Schafer et al.	
5,662,652 A		9/1997	Schafer et al.	
5,683,390 A		11/1997	Metz-Stavenhagen et al.	
5,697,929 A		12/1997	Mellinger	
5,713,898 A		2/1998	Stucker et al.	
5,725,527 A		3/1998	Biedermann et al.	
5,733,286 A		3/1998	Errico et al.	
5,738,685 A		4/1998	Halm et al.	
5,741,254 A		4/1998	Henry et al.	
5,782,833 A		7/1998	Haider	
5,800,547 A		9/1998	Schafer et al.	
5,944,465 A		8/1999	Janitzki	
6,001,098 A		12/1999	Metz-Stavenhagen et al.	
6,004,349 A		12/1999	Jackson	
6,059,786 A		5/2000	Jackson	
6,063,090 A		5/2000	Schlapfer	
6,074,391 A		6/2000	Metz-Stavenhagen et al.	

(List continued on next page.)

FOREIGN PATENT DOCUMENTS

DE	4425392	11/1995
DE	19509331	9/1996
DE	29810798	12/1999
DE	19951145	5/2001
WO	WO 92/03100	5/1992
WO	WO9426191	11/1994

OTHER PUBLICATIONS

Spine, Lipcott, Williams & Wilkins, Inc. vol. 24, No. 15, p. 1495.

Brochure of Tyco/Healthcare/Surgical Dynamics on Spiral Radius 90D, Publication Date: Sep., 2001, pp. 1–8.

Primary Examiner—Eduardo C. Robert
Assistant Examiner—David C Comstock
(74) *Attorney, Agent, or Firm*—John C. McMahon

(57) **ABSTRACT**

A structure including a pair of helically wound interlocking forms located on a cylindrical closure for an open headed medical implant and in a receiver between arms of the implant respectively. The interlocking forms each include overlapping gripping elements that engage mating elements during assembly to prevent radial splaying of arms of the implant.

39 Claims, 8 Drawing Sheets

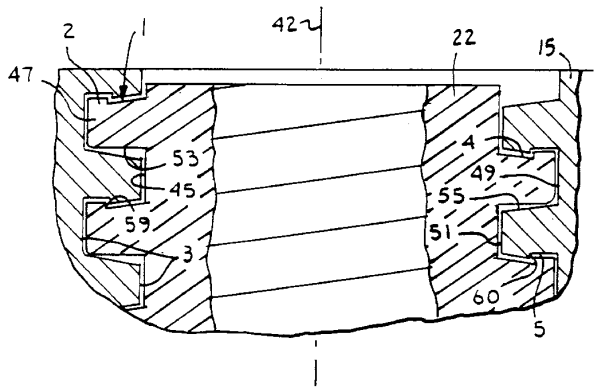

U.S. PATENT DOCUMENTS

6,077,262 A 6/2000 Schlapfer et al.
6,102,913 A 8/2000 Jackson
6,117,137 A 9/2000 Halm et al.
6,143,032 A 11/2000 Schafer et al.
6,235,034 B1 * 5/2001 Bray 606/71
6,254,146 B1 * 7/2001 Church 285/334
6,296,642 B1 10/2001 Morrison et al.
6,315,564 B1 * 11/2001 Levisman 433/174
6,485,492 B1 11/2002 Halm et al.
6,540,749 B2 4/2003 Schäfer et al.
6,551,323 B2 * 4/2003 Doubler et al. 606/73

* cited by examiner

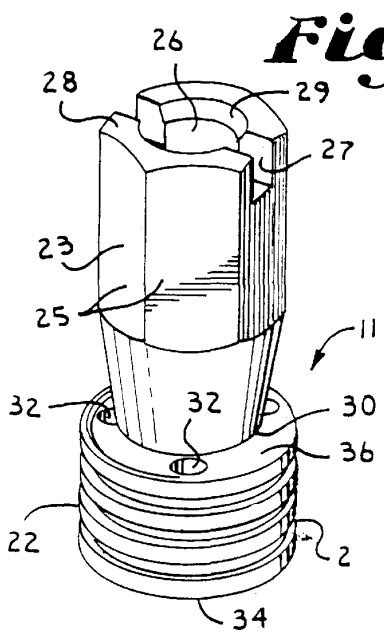

Fig. 1.

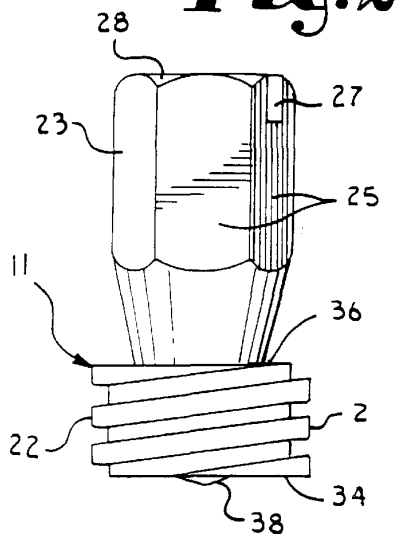

Fig. 2.

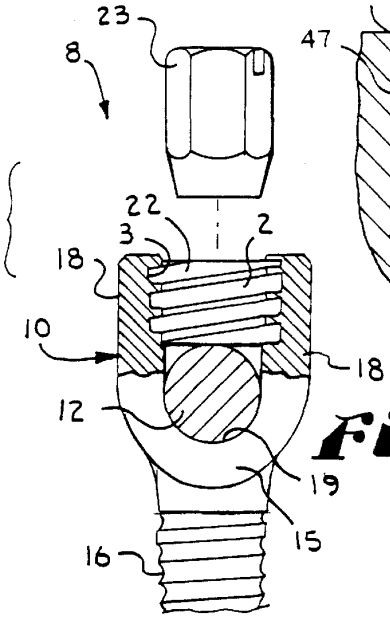

Fig. 3.

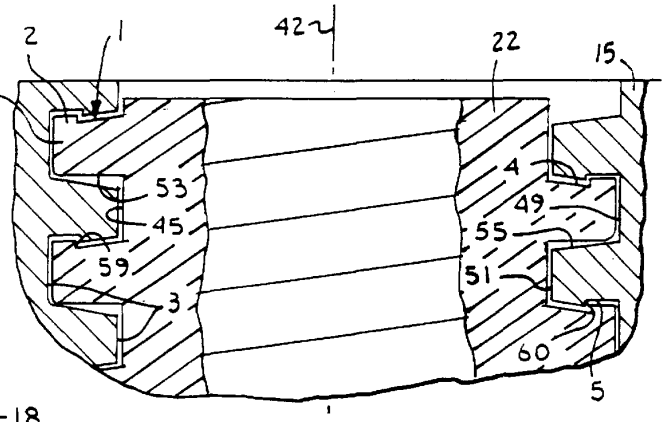

Fig. 4.

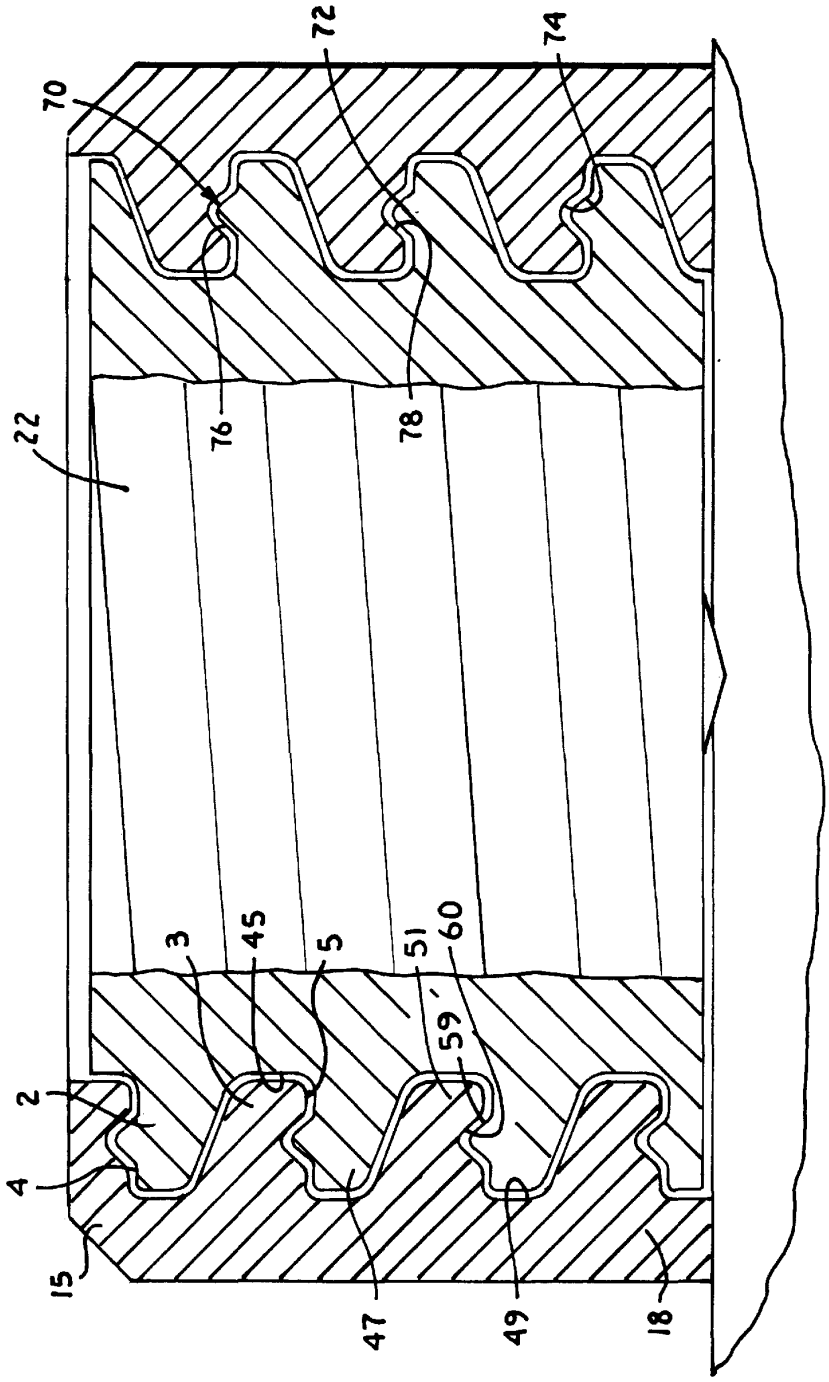

Fig. 5.

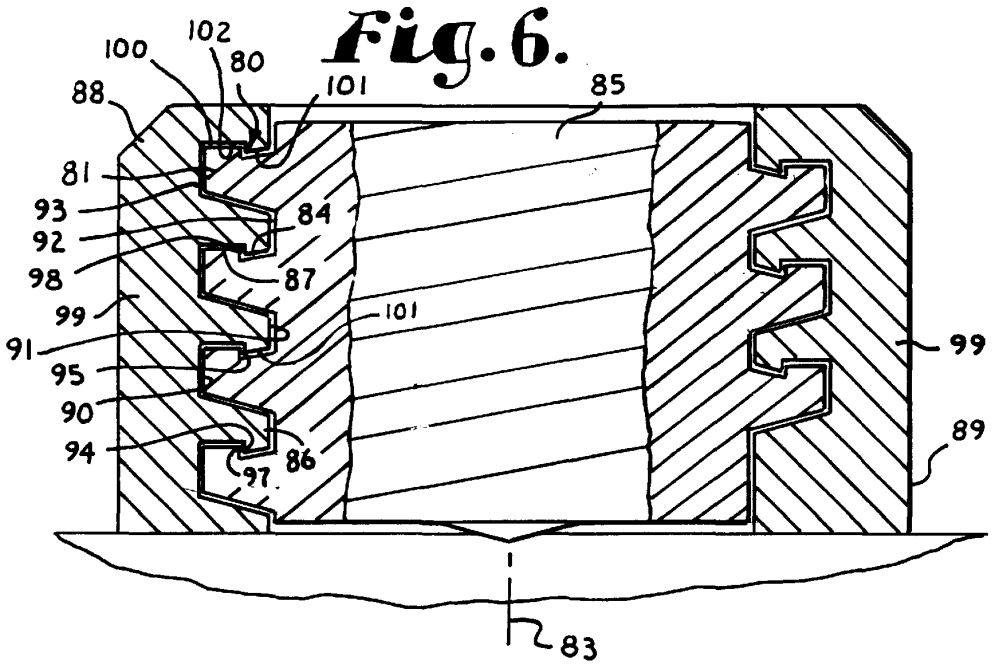
Fig. 6.
100
102
80
101
85
88
81
93
84
92
98
87
99
101
91
99
95
90
89
94
86
97
83

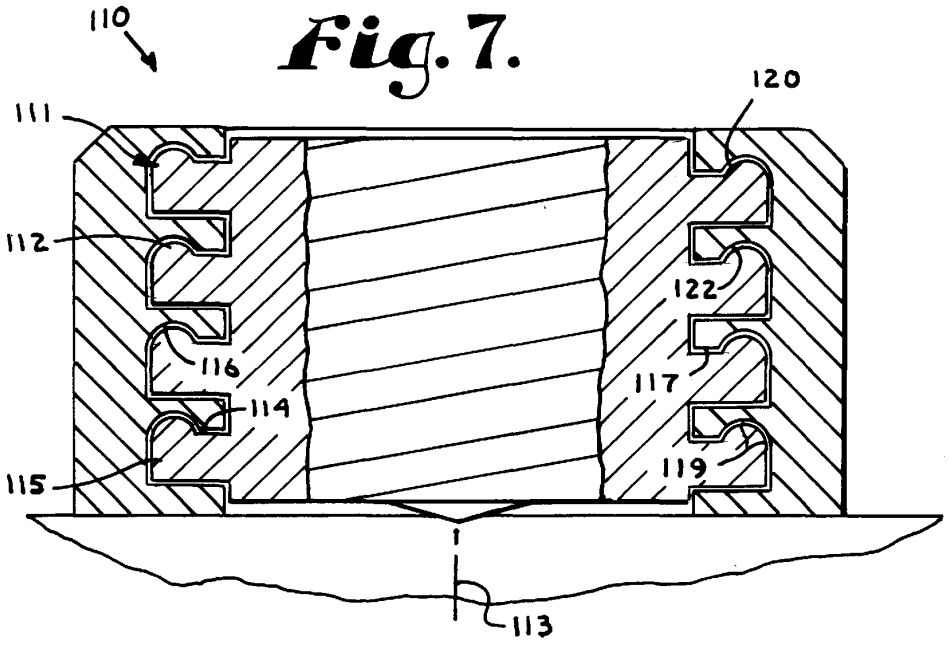
110
Fig. 7.
120
111
112
122
116
117
114
119
115
113

Fig. 8.

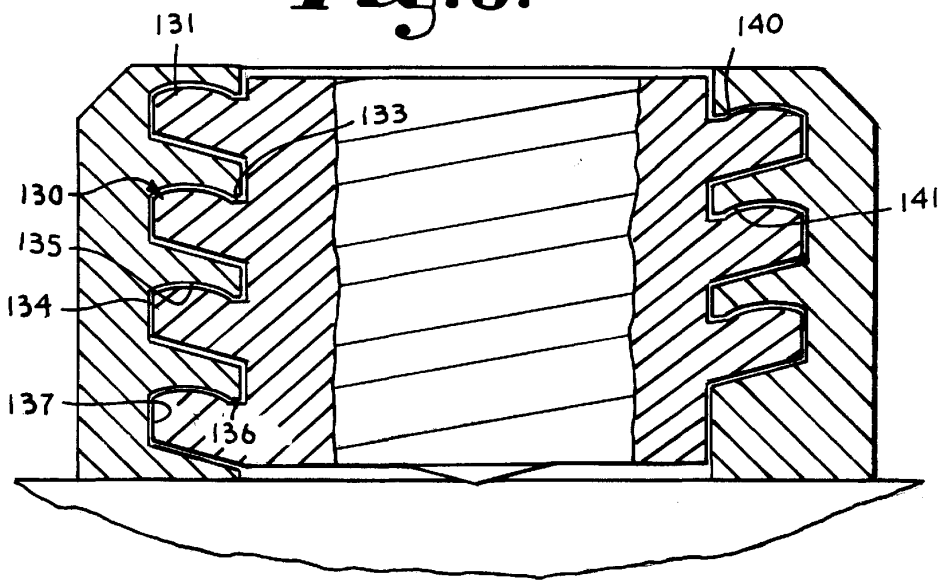

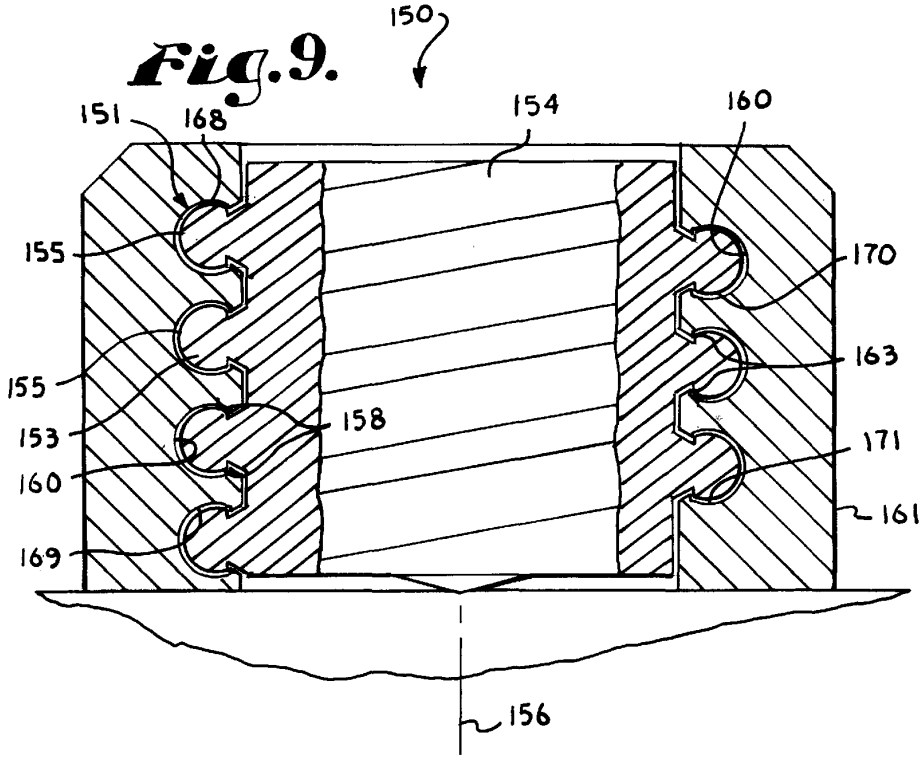
Fig.9.
150
151
168
154
160
155
170
155
163
153
158
171
160
161
169
156

Fig. 10.

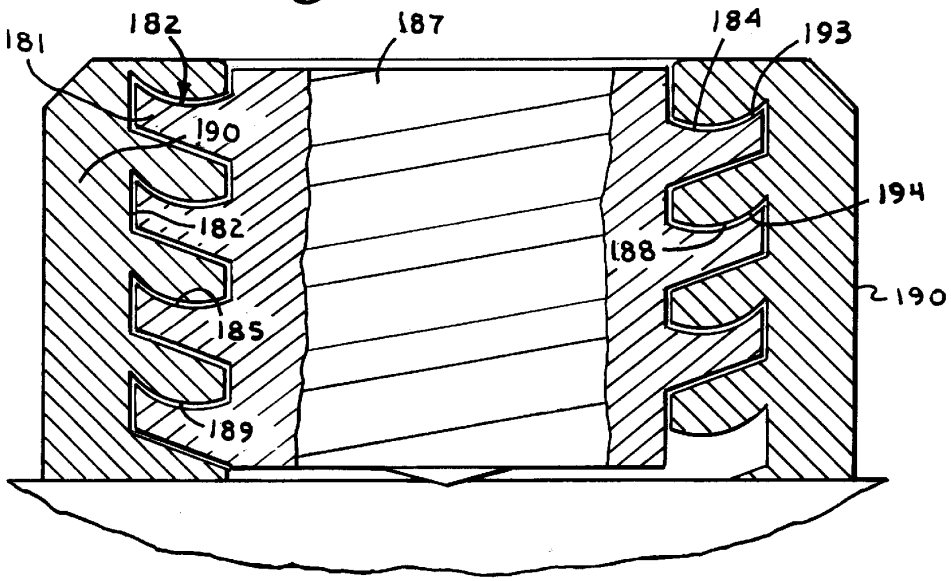

Fig. 11.

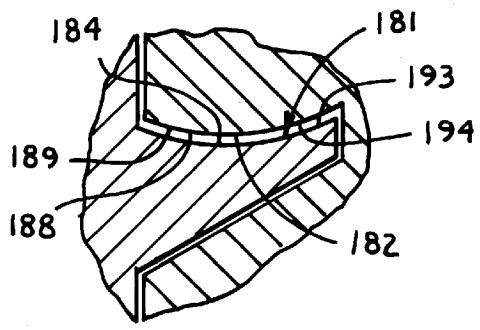

Fig. 12.

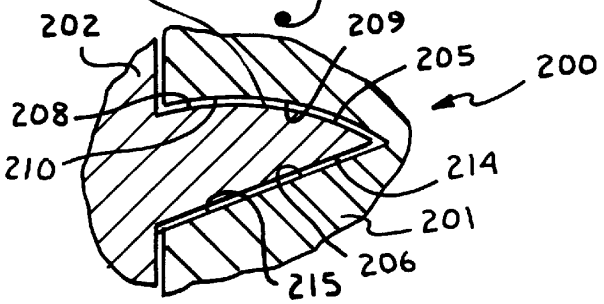

Fig. 13.

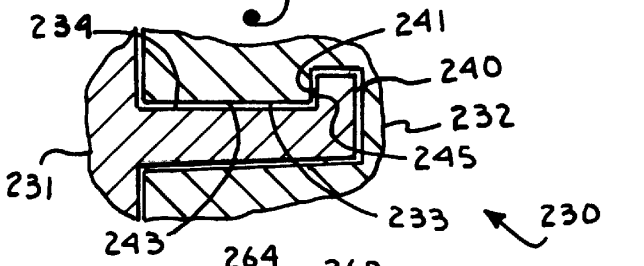

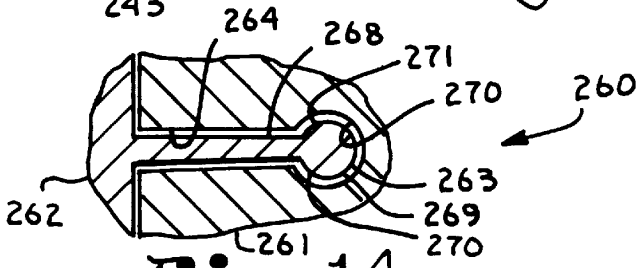

Fig. 14.

HELICAL INTERLOCKING MATING GUIDE AND ADVANCEMENT STRUCTURE

BACKGROUND OF THE INVENTION

The present invention is directed to a structure for use in interlocking together two elements and, in particular, to a structure for joining together parts of a medical implant. The structure includes a first interlocking form on a closure and a mating second interlocking form on a receiver. The closure is operably rotated into the receiver. The first and second interlocking forms are both helically wound so that the first interlocking form advances relative to the second interlocking form, when the closure with the first interlocking form is inserted in the receiver and rotated. At least one of the first or second interlocking forms includes a projection that overlaps and radially locks with the other interlocking form when the two forms are mated.

Medical implants present a number of problems to both surgeons installing implants and to engineers designing them. It is always desirable to have an implant that is strong and unlikely to fail or break during usage. It is also desirable for the implant to be as small and lightweight as possible so that it is less intrusive on the patient. These are normally conflicting goals, and often difficult to resolve.

One particular type of implant presents special problems. In particular, spinal bone screws, hooks, etc. are used in many types of back surgery for repair of injury, disease or congenital defect. For example, spinal bone screws of this type are designed to have one end that inserts threadably into a vertebra and a head at an opposite end thereof. The head is designed to receive a rod or rodlike member in a channel in the head which rod is then both captured in the channel and locked in the head to prevent relative movement between the various elements subsequent to installation.

There are two different major types of bone screws and similar devices which are classified as closed headed and open headed. While the closed headed devices are highly effective at capturing and securing a rod, since the rod is threaded through an opening in the head, it is very difficult during surgery to thread the rod through the heads. This is because there are many heads and the rod is curved or the heads do not align. Consequently, the more screw heads that the rod must pass through, the more difficult it is to thread the rod into them.

The second type of head is an open head wherein a channel is formed in the head and the rod is simply laid in an open channel. The channel is then closed with a closure member. The open headed bone screws and related devices are much easier to use and in some situations must be used instead of the closed headed devices.

While the open headed devices are often necessary and often preferred for usage, there is a significant problem associated with them. In particular, the open headed devices conventionally have two upstanding arms that are on opposite sides of a channel that receives the rod member. The top of the channel is closed by a closure member after the rod member is placed in the channel. The closure can be of a slide in type, but such are not easy to use. Threaded nuts are sometimes used that go around the outside of the arms. Such nuts prevent splaying of the arms, but nuts substantially increase the size and profile of the implant which is not desirable. Many open headed implants are closed by plugs that screw into threads between the arms, because such have a low profile. However, threaded plugs have encountered problems also in that they produce radially outward forces

that lead to splaying of the arms or at least do not prevent splaying that in turn loosens the implant. In particular, in order to lock the rod member in place, a significant force must be exerted on the relatively small plug or screw. The forces are required to provide enough torque to insure that the rod member is clamped or locked in place relative to the bone screw, so that the rod does not move axially or rotationally therein. This typically requires torques on the order of 100 inch-pounds.

Because open headed implants such as bone screws, hooks and the like are relatively small, the arms that extend upwardly at the head can be easily bent by radially outward directed forces due to the application of substantial forces required to lock the rod member. Historically, early closures were simple plugs that were threaded with V-shaped threads and which screwed into mating threads on the inside of each of the arms. But, as noted above, conventionally V-shaped threaded plugs tend to splay or push the arms radially outward upon the application of a significant amount of torque, which ends up bending the arms sufficiently to allow the threads to loosen or disengage and the closure to fail. To counter this, various engineering techniques were applied to allow the head to resist the spreading force. For example, the arms were significantly strengthened by increasing the width of the arms by many times. This had the unfortunate effect of substantially increasing the weight and the profile of the implant, which was undesirable.

Many prior art devices have also attempted to provide outside rings or some other type of structure that goes about the outside of the arms to better hold the arms in place while the center plug is installed and thereafter. This additional structure may cause the locking strength of the plug against the rod to be reduced which is undesirable, especially when the additional structure is partly located beneath the plug. Also, the additional elements are unfavorable from a point of view of implants, since it is typically desirable to maintain the number of parts associated with the implants at a minimum and, as noted above, the profile as minimal as possible.

Other designers have attempted to resolve the splaying problem by providing a closure with a pair of opposed radially extending wedges or flanges that have mating structure in the arms of the implant. Such devices serve as a closure and do somewhat resist splaying of the arms, but are often very difficult to use. In particular, the rods normally have some curvature as the rods are bent to follow the curvature of the spine and normally bow relative to the bottom of the bone screw channel that receives such a rod. The rod thus fills much of the channel and must be "unbent" to rest on the bottom of the channel and be held securely in place. Therefore, the rod is preferably compressed by the plug and unbent by advancement of the plug into the channel in order to assume that the plug will securely hold the rod and that the rod and plug will not loosen when post assembly forces are placed on the rod. Because it takes substantial force to unbend the rod, it is difficult to both place the plug fully in the channel and rotate it for locking while also trying to line up the wedges with the mating structure. It is much easier to align the plug mating structure with the mating structure of the arms at the top of the arms and then rotate the plug so as to screw the plug into a plug receiver to advance the plug toward the rod. In this way the plug starts applying significant force against the rod only after parts of the mating structure have at least partly joined at which time torque can be applied without having to worry about alignment. It is noted that where wedges are used, the cross section of the structure changes therealong so that the device

"locks up" and cannot turn further after only a small amount of turning, normally ninety degrees.

Consequently, a lightweight and low profile closure plug was desired that resists splaying or spreading of the arms while not requiring significant increases in the size of the screw or plug heads and not requiring additional elements that encircle the arms to hold the arms in place.

It is noted that the tendency of the open headed bone screw to splay is a result of the geometry or contour of the threads typically employed in such devices. In the past, most bone screw head receptacles and screw plugs have employed V-shaped threads. V-threads have leading and trailing sides oriented at angles to the screw axis. Thus, torque on the plug is translated to the bone screw head at least partially in an axial direction, tending to push or splay the arms of the bone screw head outward in a radial direction. This in turn spreads the internally threaded receptacle away from the thread axis so as to loosen the plug in the receptacle.

The radial expansion problem of V-threads has been recognized in various types of threaded joints. To overcome this problem, so-called "buttress" threadforms were developed. In a buttress thread, the trailing or thrust surface is oriented perpendicular to the thread axis, while the leading or clearance surface remains angled. This theoretically results in a neutral radial reaction of a threaded receptacle to torque on the threaded member received.

Development of threadforms proceeded from buttress threadforms which in theory have a neutral radial effect on the screw receptacle to reverse angled threadforms which theoretically positively draw the threads of the receptacle radially inward toward the thread axis when the plug is torqued. In a reverse angle threadform, the trailing side of the external thread is angled toward the thread axis instead of away from the thread axis, as in conventional V-threads. While buttress and reverse threadforms reduce the tendency to splay, the arms can still be bent outward by forces acting on the implant and the threads can be bent by forces exerted during installation. Therefore, while certain threadforms may not exert radial forces during installation, at most such threadforms provide an interference or frictional fit and do not positively lock the arms in place relative to the closure plug.

Finally, it is noted that plugs of this type that use threadforms are often cross threaded. That is, as the surgeon tries to start the threaded plug into the threaded receiver, the thread on the plug is inadvertently started in the wrong turn or pass of the thread on the receiver. This problem especially occurs because the parts are very small and hard to handle. When cross threading occurs, the plug will often screw part way in the receiver and then "lock up" so that the surgeon is led to believe that the plug is properly set. However, the rod is not tight and the implant fails to function properly. Therefore, it is also desirable to have a closure that resists crossthreading in the receiver.

SUMMARY OF THE INVENTION

A non threaded guide and advancement structure is provided for securing a set screw, plug or closure in a receiver. Preferably the receiver is a rod receiving channel in an open headed bone screw, hook or other medical implant wherein the channel has an open top and is located between two spaced arms of the implant.

The guide and advancement structure has a first part or interlocking form located on the closure and a second part or interlocking form that is located on the interior of the receiving channel.

Both parts of the guide and advancement structure are spirally or more preferably helically wound and extend about the closure and receiving channel for at least one complete 360° pass or turn. Preferably, both parts include multiple turns such as 2 to 4 complete 360° rotations about the helixes formed by the parts. The helixes formed by the parts are coaxial with the closure when the closure is fully received in or being rotated into the receiving channel between the arms.

One major distinguishing feature of the guide and advancement structure is that each of the parts include elements that mechanically interlock with the opposite part as the closure is rotated and thereby advanced into the receiving channel toward the bottom of the channel and into engagement with a rod received in the channel.

Each part of the guide and advancement structure preferably has a generally constant and uniform cross section, when viewed in any cross sectional plane fully passing through the axis of rotation of the closure during insertion, with such uniform cross section extending along substantially the entire length of the interlocking form. It is noted that at opposite ends of each interlocking form, the form must be feathered or the like and so the cross section does change some at such locations, while retaining part of the overall shape. In particular, the outer surfaces of each interlocking form remain sufficiently uniform to allow interlocking forms to be rotated together and slide tangentially with respect to each other through one or more complete turns of the closure relative to the receiving channel. Each part may be continuous from near a bottom of the closure or receiving channel to the top thereof respectively. In certain circumstances one or both parts may be partly discontinuous, while retaining an overall helical configuration with a generally uniform cross sectional shape. When the interlocking form has multiple sections due to being discontinuous, each of the sections has a substantially uniform cross section along substantially the entire length thereof.

In order to provide an interlocking structure, the parts of the structure include helical wound projections or interlocking forms that extend radially outward from the closure and radially inward from the receiving channel. The interlocking forms may be of many different shapes when viewed in crossection with respect to a plane passing through the axis of rotation of the plug during insertion. In general, the interlocking forms increase in axial aligned width or have a depression at a location spaced radially outward from where the interlocking form attaches to a respective closure or receiving channel, either upward (that is, parallel to the axis of rotation of the closure in the direction from which the closure comes or initially starts) or downward or in both directions. This produces a first mating element that is in the form of a protrusion, bump, ridge, elevation or depression on the interlocking form that has a gripping or overlapping portion. The opposite interlocking form has a second mating element with a gripping or overlapping portion that generally surrounds or passes around at least part of the first mating element in such a way that the two are radially mechanically locked together when the closure is advanced into the receiving channel.

Therefore, in accordance with the invention a mating and advancement structure is provided for joining two devices, that are preferably medical implants and especially are an open headed implant that includes a rod receiving channel and a closure for closing the receiving channel after the rod is received therein. The mating and advancement structure includes a pair of mateable and helical wound interlocking

forms with a first interlocking form located on an outer surface of the closure and a second interlocking form located on an inner surface of the receiving channel or receiver. The first and second interlocking forms are startable so as to mate and thereafter rotatable relative to each other about a common axis so as to provide for advancement of the closure into the receiver during assembly when the closure interlocking form is rotated into the receiver interlocking form. The first and second interlocking forms have a helical wound projection that extends radially from the closure and the receiver respectively. Each interlocking form projection has a base that is attached to the closure or receiver respectively and preferably includes multiple turns that may each be continuous or partially discontinuous with constant or uniform cross-sectional shape. The interlocking forms have substantial axial width near an outer end thereof that prevents or resists misalignment of the interlocking form during initial engagement and rotation thereof.

After assembly, in some embodiments each turn of each projection generally snugly engages turns of the other projection on either side thereof. In other embodiments there must be sufficient tolerances for the parts to slide tangentially, so that when thrust surfaces of the interlocking forms are very close during tightening, some gap occurs on the leading side of the closure interlocking form. In such a case the portions of the interlocking forms on the thrust side thereof lock together and prevent radial splaying. Located radially spaced from where the base of each projection is attached to either the closure or receiver respectively, is an axially extending (that is extending in the direction of the axis of rotation of the plug or vertically) extension or depression. The opposite or mating interlocking form has elements that wrap around or into such extensions or depressions of the other interlocking form. That is, the forms axially interdigitate with each other and block radial movement or expansion. In this way and in combination with the interlocking forms preferably being snug relative to each other with sufficient clearance to allow rotation, the interlocking forms, once assembled or mated lock to prevent radially slipping or sliding relative to each other, even if the base of one or both is bent relative to the device upon which it is mounted. It is possible that the cross section of the projection (in a plane that passes through the plug axis of rotation of the plug) of each section of each turn or pass of the interlocking form be the same, although this is not required in all embodiments. For example, part of the interlocking form may be missing in the region between opposed arms when assembly is complete as this area is not required to hold the arms together.

Preferably the present invention provides such an interlocking form for use in a medical implant closure which resists splaying tendencies of arms of a receiver. In one embodiment the interlocking form of the present invention provides a compound or "non-linear" surface on a trailing face, thrust face or flank of the interlocking form.

The interlocking form located on the closure in one embodiment is helically wound about a cylindrical outer surface of the closure and has an inner radius or root, and an outer radius or crest that remain constant over substantially the entire length of the interlocking form. The receiver has a mating or similar shaped interlocking form wound about the interior thereof. In this embodiment the interlocking form has leading or clearance surfaces and trailing or thrust surfaces, referenced to the direction of axial movement of the form when rotated into one another.

The structure also includes an internal helical wound interlocking form located on an internal surface of a receiver member and having an outer root and an inner crest. The internal interlocking form has thrust surfaces which are oriented in such a direction so as to be engaged by the thrust surfaces of the external interlocking form of a member engaged therewith.

In the interlocking forms of this series of embodiments, the thrust surfaces are "non-linear" or compound. That is, the thrust surfaces have a non-linear appearance when represented in cross section. The purpose for the non-linear or compound surface is to provide a portion of the thrust surface which is oriented in such a direction as to resist a tendency of the receiver to expand when tightening torque is applied to rotate the interlocking forms into a mating relationship. As applied to a closure for an open headed bone implant screw, the non-linear or compound surfaces of the interlocking forms resist splaying tendencies of the arms of the head. The objective of the interlocking form is not necessarily to generate a radially inwardly directed force on the receptacle in tightening the fastener (although this may occur in some embodiments), but importantly to resist and prevent outward forces generated by engagement of the closure with the closure receptacle or by other forces applied to the components joined by the closure and closure receptacle. It is noted that the present invention requires that only a portion of the thrust surfaces of a closure be so configured as to face toward the closure axis and only a portion of thrust surfaces of a closure receptacle face away from the axis.

While the axial extension or depression in one series is located on the thrust or trailing surface, it is also possible for such to be located on the opposite or leading surface or both.

In this series of embodiments, a section of the interlocking form at the crest, that is located radially outward of the root, is enlarged in cross sectional area to create a gripping, locking or stopping surface that resists slippage or sliding in a radial direction relative to an opposed interlocking form. In a complementary manner, a section of the interlocking form between the root and the crest and that is radially spaced from the root is enlarged in cross sectional area to create a gripping, locking or stopping surface that engages a like surface of the opposite interlocking form. The enlarged sections of the inner and outer interlocking forms are created, in practice, by cutting, molding, machining or the like grooves or channels or the like into a radially inward portion of the thrust surface of the external interlocking form and mating grooves or channels into a radially outward portion of the thrust surface of the internal interlocking form. Such grooves or channels may be formed by specially shaped taps and dies, cutting elements or by other suitable manufacturing processes and technologies, including molding.

The interlocking forms of the present invention may be implemented in a variety of configurations of non-linear, compound, or complex trailing and/or leading surfaces. The nomenclature used to describe variations in the interlocking forms of the present invention is especially referenced to the external interlocking forms located on a closure, with complementary or similar shapes applied to the internal interlocking forms on a receiver. In an axial shoulder interlocking form of the present invention, a somewhat squared gripping shoulder is formed on an outer periphery of the external interlocking forms and an inner gripping surface on the internal interlocking forms. The axial shoulder interlocking form results in complementary cylindrical surfaces on the external and internal interlocking forms which mutually engage when the fastener or closure is rotated into a closure receptacle.

In an axial extending bead interlocking form, the external interlocking form is provided with a rounded peripheral

bead or lateral lip which projects in an axial direction along the interlocking form crest and a complementary rounded concave channel in the internal interlocking form. The reverse occurs with the internal interlocking form.

In a radial bead interlocking form, a rounded bead enlargement is formed on the radially outward periphery at the crest of the external interlocking form, while the internal interlocking form is formed in a complementary manner to receive the radial bead interlocking form.

A scalloped or scooped interlocking form is, in effect, a reciprocal of the axial bead interlocking form and has a rounded channel or groove located along the thrust surface of the external interlocking form, with a complementary rounded convex bead shape formed associated with the internal interlocking form.

A variation of the axial bead interlocking form is a medial bead embodiment. In the medial bead interlocking form, a bead projects from a base thrust surface of an external interlocking form in an axial direction at a location medially between the root and crest of the interlocking form. In a complementary medial bead internal interlocking form, an axial groove is formed in a base thrust surface between the root and crest. In a medial groove interlocking form, an axial groove is formed in a base thrust surface of the external interlocking form medially between the root and crest, while the internal interlocking form has an axial bead located medially between the root and crest.

Variations in the above described interlocking forms are envisioned with respect to relative extensions or enlargements and depressions or depth of grooves of the various interlocking forms. In some variations, the opposite interlocking forms have the same but reversed and inverted cross section, whereas in others the cross section of the paired interlocking forms is different. It is noted that many other configurations of interlocking forms with non-linear, compound or complex thrust surfaces are envisioned, which would be encompassed by the present invention.

The interlocking forms of the present invention find particularly advantageous application in various types of bone implant devices, although the inventive interlocking forms are not limited to such use. The interlocking forms also have advantages in reducing misalignment problems of cross-interlocking and misinterlocking of interlocking forms when the opposed interlocking forms are joined and rotated which is commonly encountered in such devices when threads of various types are used.

OBJECTS AND ADVANTAGES OF THE INVENTION

Therefore, objects of the present invention include: providing an improved closure for an open headed lightweight and low profile medical implant wherein the implant has a pair of spaced arms and the closure closes between the arms; providing such a closure which includes a pair of opposed interlocking forms and which resists tendencies of the arms to splay or separate during insertion of the closure, to thereby reduce the likelihood of failure of the implant and closure system during use; providing such a closure which can be installed at comparatively high torques to thereby secure the closure in the receiver channel and in certain embodiments to also lock a rod member in the open head of the implant where the closure engages and is urged against the rod by rotation in a receiver channel of the remainder of the implant; providing an interlocking form for such a closure which resists tendencies of parts of the channel receiver to expand radially outward in response to high torque applied to the closure; providing such an interlocking form in which the respective thrust surfaces of mating internal and external interlocking forms are "non-linear", compound, or complex to provide only a portion of each trailing or leading surface which is oriented in such a direction as to resist the splaying or expanding tendencies of parts of the receiving channel; providing such an interlocking form wherein the interlocking form has a base that is secured to a member and the interlocking form extends radially outward from the base with an axial extension starting at or radially spaced from the base and further wherein the interlocking form has an extension or depression that extends in an axial direction relative to an axis of rotation of the interlocking form and which mates with the opposite interlocking form so as to grip or hold such extension or depression and yet further wherein opposed interlocking forms are rotatable relative to each other during assembly, but are preferably sufficiently snug or located sufficiently near to one another to prevent one interlocking member to slide radially past another when torque is applied thereto or when forces act on the implant; providing embodiments of such an interlocking form having an enlarged radial cross section wherein the enlargement is spaced radially outward of a root of the external interlocking form and a complementary enlarged cross section spaced radially inward of a root of the internal interlocking form; providing embodiments of such an interlocking form having a first groove or channel formed in a surface inward of a periphery of an external interlocking form and a complementary second groove or channel formed in a surface inward of a periphery of an internal interlocking form so that the paired interlocking forms overlap and radially lock together upon assembly; providing embodiments of such an interlocking form in which the enlarged peripheries and grooves of the external and internal interlocking form have or form angularly defined or axially extending shoulders; providing embodiments of such an interlocking form in which the enlarged peripheries of the external and internal interlocking form have or form arcuately defined or rounded shoulders; providing such interlocking forms having a generally uniform cross section along a substantial length thereof; providing such interlocking forms that rotate relative to each other at least one full turn upon assembly; providing such interlocking forms which reduce the likelihood of cross-interlocking or misinterlocking problems of members during initial joining; providing such interlocking forms which can be formed relatively economically using appropriate metal forming technologies; and providing interlocking forms, particularly for implant and bone fixation hardware, which are economical to manufacture, which are secure and efficient in use, and which are particularly well adapted for their intended usage.

Other objects and advantages of this invention will become apparent from the following description taken in conjunction with the accompanying drawings wherein are set forth, by way of illustration and example, certain embodiments of this invention.

The drawings constitute a part of this specification and include exemplary embodiments of the present invention and illustrate various objects and features thereof.

BRIEF DESCRIPTION OF THE DRAWINGS

FIG. **1** is a perspective view of a closure for an open headed bone screw that has a helical wound gripping interlocking form in accordance with the present invention mounted thereon.

FIG. **2** is a side elevational view of the closure.

FIG. **3** is a side elevational view at a reduced scale and illustrates an interlocking form of the closure mated with and installed in a companion interlocking form on an open headed bone screw to capture a fixation rod within a head of the bone screw and with the head of the bone screw partially broken away to illustrate detail thereof.

FIG. **4** is an enlarged fragmentary side elevational view of the bone screw head with the closure installed therein, the closure and bone screw head incorporating the interlocking form according to the present invention with portions broken away to show detail thereof.

FIG. **5** is a view similar to FIG. **4** and illustrates details of first modified bone screw and closure showing a medial bead embodiment of an interlocking form of the present invention.

FIG. **6** is view similar to FIG. **4** and illustrates details of a second modified bone screw and closure showing an axial aligned shoulder embodiment of an interlocking form of the present invention.

FIG. **7** is a view similar to FIG. **4** and illustrates details of a third modified bone screw and closure showing an axial bead embodiment of an interlocking form of the present invention.

FIG. **8** is a view similar to FIG. **4** and illustrates details of a fourth modified bone screw and closure showing a shallow axial bead embodiment of an interlocking form of the present invention.

FIG. **9** is a view similar to FIG. **4** and illustrates details of a fifth modified bone screw and closure showing a radial bead embodiment of an interlocking form of the present invention.

FIG. **10** is a view similar to FIG. **4** and illustrates details of a sixth modified bone screw and closure showing a scalloped depression or scooped embodiment of an interlocking form of the present invention.

FIG. **11** is a fragmentary cross sectional view of a seventh modified bone screw and closure, similar to the embodiment in FIG. **10**, showing a pair of interlocking forms in accordance with the present invention.

FIG. **12** is a fragmentary cross sectional view of an eighth modified embodiment of a bone screw and closure showing a pair of interlocking forms in accordance with the invention.

FIG. **13** is a fragmentary cross sectional view of an ninth modified embodiment of a bone screw and closure showing a pair of interlocking forms in accordance with the invention.

FIG. **14** is a fragmentary cross sectional view of an tenth modified embodiment of a bone screw and closure showing a pair of interlocking forms in accordance with the invention.

DETAILED DESCRIPTION OF THE INVENTION

As required, detailed embodiments of the present invention are disclosed herein; however, it is to be understood that the disclosed embodiments are merely exemplary of the invention, which may be embodied in various forms. Therefore, specific structural and functional details disclosed herein are not to be interpreted as limiting, but merely as a basis for the claims and as a representative basis for teaching one skilled in the art to variously employ the present invention in virtually any appropriately detailed structure.

Referring to the drawings in more detail, the reference numeral **1** generally designates a gripping interlocking form arrangement incorporating a non-linear or compound surface which embodies the present invention. The interlocking form arrangement **1** includes an external interlocking form **2** and internal interlocking form **3** which have respective thrust surfaces **4** and **5** (FIG. **4**) and which are used as pairs. The interlocking form arrangement **1** may be used on any of a number of interlocking formed devices, such as an implanted bone fixation system **8** (FIG. **3**), including a receiver or open headed implant member **10** which receives a closure or closure member **11** (FIGS. **1** and **2**) to secure a fixation member **12** therein. In the interlocking form arrangement **1** of the present embodiment, the thrust surfaces **4** and **5** are non-linear or compound in such a manner as to resist tendencies of the receptacle **10** to splay or expand when the closure member **11** is rotated therein.

The illustrated implant member **10** is also referred to as an open headed bone screw and includes a U-shaped implant head **15** and a threaded shank **16**. The head **15** has a pair of spaced apart arms **18** forming a rod receiving channel **19**. The arms **18** are radially inwardly tapped with the internal interlocking form **3** that is discontinuous between sides to receive the closure member **11**. The illustrated shank **16** tapers to a point (not shown) and is externally threaded and adapted to be received in a bone, such as a vertebra, to anchor the rod **12** to such a bone.

The illustrated closure member **11** includes a plug, base section or base **22** and a break off head section **23** that breaks from the base **22** at a preselected torque. It is foreseen that such a closure could be made without a breakoff head and other structure could be added for torquing or removing the base section. Furthermore, it is foreseen that such a base both captures the rod and locks the rod as in the embodiment illustrated in FIGS. **1** to **4** or, alternatively, that the base could just capture the rod and a set screw could be used in a threaded bore in the base to lock the rod in place. The base section **22** is provided with the external interlocking form **2** which is compatible with the internal interlocking form **3** of the bone screw head **15**. Both interlocking forms **2** and **3** are helically wound and rotatably mateable together through rotation or turning of the closure member **11** about a central axis **42** thereof. The head **23** includes structure for positive engagement by an installation tool (not shown) to install the closure member **11** in the bone screw member **10**. The structure that allows for installation of the illustrated break off head **23** includes faces **25** forming a hexagonal shape or "hex" head to receive a complementary hexagonally shaped installation driver or tool. The head **23** also includes a central bore **26** and a cross bore slot **27**. The outer end of the head **23** is chamfered at **28**, and the bore **26** is provided with an interior conical countersink at **29**. The region where the head **23** meets the base **22** is reduced in cross sectional thickness to form a weakened breakaway or fracture region **30**. The breakaway region **30** is designed so that the head **23** separates from the base **22** when a selected torque is applied by the installation tool, as is diagrammatically illustrated by breaking away of the head **23** in FIG. **3**. The base **22** is preferably provided with structure to facilitate removal of the base **22** from the implant head **15**, such as the illustrated removal bores **32**. The bores **32** may be formed by drilling from a lower end surface **34** of the plug **22**, since an upper end surface **36** of the plug **22** is normally not accessible for drilling the bores **32** prior to break-off of the head **23**. It is foreseen that many different types of removal devices or structures can be utilized with the base such as: axially aligned bores with hex, torx or other multifaceted cross-section, step down bores for engagement by an easy out, bores at the periphery or non axially aligned on the face of

the base, bores with a left handed thread or the like. Further, the same structure used to torque the base on installation may be used to remove the base.

The base **22** is rotated into the receiving member of the bone screw head **15** to clamp the fixation rod **12** therein for any of a variety of surgical purposes. In general, the rod **12** is used to fix the position of a bone or portion of a bone, such as a plurality of vertebrae. The rod **12** may be anchored relative to some vertebrae and, in turn, used to secure other vertebrae in desired positions or orientations or used to properly align a series of vertebrae. It is generally required that the union formed between the bone screw **10**, closure **11** and the rod **12** be very tight or snug to avoid relative movement therebetween. The fixation system **8** preferably employs structure that positively engages and seats the head **15** and/or the base **22** with respect to the rod **12**, such as a conical set point **38** formed on the bottom surface **34** of the base **22** which engages the rod **12**. The point **38** positively "bites" into the surface of the rod **12** to help prevent rotational or axial movement of the rod **12** relative to the screw **10**. Alternatively or in combination with a point **38**, other structures may be used to positively engage the closure plug **22** with the rod **12**, such as a sharp edged coaxial ring (not shown) having a V-shaped cross section formed on the lower surface **34** of the base **22** or point extending upwardly from the channel.

The interlocking forms **2** and **3** are helical and are intended to advance the closure member **11** linearly along the axis of rotation **42** of the closure member **11** and the interlocking forms **2** and **3** relative to another member as the closure member **11** is rotated relative to the bone screw **10**. A spatial reference for such rotation and linear movement is along the axis **42** (FIG. **4**). The axis **42** locates the coincident axes of the external or radially outward interlocking form **2** of the base **22** and the internal or radially inward interlocking form **3** of the head **15**, when the base **22** is inserted into the head **15** by starting at the top of the interlocking form **3** (top is up in FIG. **4**) and rotated. The base **22** has a basic cylindrical shape, and the external interlocking form **2** includes a root **45** and a crest **47** formed by cutting a helical wound channel of the desired cross section into the original surface of the base **22**. The crest **47** of the external interlocking form **2** has a greater radius than the root **45**. In a like manner, the internal interlocking form **3** of the head **15** of the screw **10** has a helical channel under cut thereinto, forming a root **49** and crest **51**. The root **49** of the internal interlocking form **3** has a greater radius than the crest **51**.

The thrust surfaces **4** and **5** respectively of the external and internal interlocking forms **2** and **3** engage frictionally when the base **22** is rotated into the head **15**. The thrust surfaces **4** and **5** are located on the trailing sides respectively of the crests **47** and **51**, as referenced to the tightening direction movement of the base **22** into the head **15**. In general, there is minimal contact between the clearance surfaces **53** and **55** when the base **22** is rotated in a tightening direction into the screw head **15** to allow rotation. The clearance surfaces **53** and **55** may frictionally engage when the base **22** is rotated in a reverse direction to remove it from the screw head **15**.

Frictional engagement of the thrust surfaces **4** and **5** due to rotation causes the base **22** to be advanced linearly along the axis **42** into the screw head **15**. However, once the base **22** "bottoms out" by contact of the lower surface **34** or the set point **38** with the rod **12** and the rod **12** is unbent and pushed downwardly as far as it will go into the channel or seat **19**, further rotation of the base **22** cannot result in further linear movement of the base **22** within the head **15**. The interlocking forms **2** and **3** thereafter are radially locked together and each turn or pass of the forms **2** and **3** is preferably sufficiently snug with respect to turns of the opposite interlocking form to prevent either form **2** or **3** from slipping or sliding radially past one another upon application of additional torque or with application of forces due to usage by the patient.

The various compound, complex, or non-linear interlocking form arrangements of the present invention are intended to resist splaying tendencies of the arms **18**. In particular, each thrust surface **4** and **5** of the interlocking forms **2** and **3** have a gripping, blocking or splay resisting surface **59** or **60** respectively which is oriented in such a direction as to resist splaying of the arms **18** of the screw head **15** when the base **22** is rotated to a high degree of torque. On the external interlocking form **2**, the splay resisting surface **59** is directed generally toward or faces the axis **42**. Conversely, on the internal interlocking form **3**, the splay resisting surface **60** is directed generally away from or faces away from the axis **42**. Each of the surfaces **59** and **60** in this manner wrap over or around the opposite and block substantial radially relative movement there between. It is especially noted that the surfaces **59** and **60** are extensions of the interlocking forms **2** and **3** in an axial direction (that is parallel to the axis **42** or up and down as seen in FIG. **4**). This axial extension is spaced away from the juncture of the interlocking forms **2** and **3** with the base **22** and screw **10**. It is foreseen that such an extension can take many shapes and configurations (some of which are shown herein) and may also functionally be depressions or grooves. In each case the paired interlocking forms, such as forms **2** and **3**, overlap each other and are snug about each other so as to prevent substantial relative radial slippage or movement between them during and after assembly of the base **22** into the bone screw **10**.

FIG. **5** illustrate a non-linear or compound thrust surface interlocking form arrangement **70** which is of a medial bead interlocking form type. The interlocking form arrangement **70** a thrust surface **4** located on a plug **22** and internal interlocking form **3** with thrust surfaces **5** within a head **15** of a bone screw **10**. The thrust surfaces **4** and **5** are contoured to provide complementary, interacting, splay resisting surfaces **59** and **60** on the external and internal interlocking forms **2** and **3** respectively. The external interlocking form **2** is provided with a bead **72** on the thrust surface **4**, and the internal interlocking form **3** is provided with a complementary channel or groove **74** formed into the thrust surface **5**. The illustrated thrust surfaces **4** and **5** are substantially perpendicular to the axis **42**; however, such surfaces may alternatively be angled somewhat with respect to the axis **42** so as to slope downward or upward as the surface extends radially outward.

The bead **72** is located at a radius which is between or medial with respect to the root **45** and crest **47** of the external interlocking form **2**. Similarly, the groove **74** is located at a radius which is medial to the root **49** and crest **51** of the internal interlocking form **3**. The illustrated bead **72** and groove **74** are rounded and somewhat triangular in cross section. Alternatively, the bead and groove **72** and **74** could be pointed and triangular, squared off, or semicircular. It should also be noted that the bead and groove **72** and **74** could be replaced by a medial groove formed in the external interlocking form **2** on the thrust surface **4** and a medial bead formed on the thrust surface **5** of the internal interlocking form **3**. An inwardly facing surface **76** of the bead **72** forms the splay resisting surface **59** thereof, while an outwardly facing surface **78** of the groove **74** forms the splay resisting surface of the groove **74**. Engagement of the splay resisting

surfaces **76** and **78**, respectively of the bead **72** and groove **74**, resists tendencies of the arms **18** of the screw head **15** to splay when the closure base **22** is rotated into the head **15**.

FIGS. **6** to **14** illustrate further variations in the paired interlocking forms of the present invention. In each case the base closure and bone screw, except as noted with respect to the interlocking forms, of the variations shown in FIGS. **6** to **14** are essentially the same as those shown in FIGS. **1** to **4**, so only differing detail of the interlocking form structure will be described in detail and reference is made to the description given for FIGS. **1** to **4** for the remaining detail.

In FIG. **6**, a guide and advancement structure **80** includes the external interlocking form **81** having an axially aligned shoulder or flange-like shaped configuration when view in cross section in a plane passing through an axis of rotation **83**. The interlocking form **81** has a thrust surface **84** on a base **85**. The structure **80** also has an internal interlocking form **86** with a thrust surface **87** within the head **88** of a bone screw **89**. The internal interlocking form **86** has a root **90** and a crest **91**, while the external interlocking form **81** includes a root **92** and crest **93**. The thrust surface **84** of the external interlocking form **81** includes an axially oriented or cylindrical shoulder **94** which forms a splay resisting surface **95** thereof.

Similarly, the thrust surface **87** of the internal interlocking form **86** includes a mating or complementary axially oriented or cylindrical shoulder **97** which forms a splay resisting surface **98**. Engagement of the splay resisting surfaces **95** and **98** resists tendencies of the arms **99** of the head **88** to splay when the plug or base **85** is rotated into the head **88** and torqued tightly or at later times during usage. It is foreseen that a variation of the axial shoulder interlocking form would provide shoulders at inclined angles (not shown) to the axis **42**. The illustrated splay resisting shoulder **94** is formed by a rectangular cross section bead **100** formed on the thrust surface **84** of the external interlocking form **81**. Similarly, splay resisting shoulder **97** is formed by a somewhat rectangularly cross section shaped bead or foot portion **101** adjacent a groove **102** for receiving bead **100** and formed in the thrust surface **87** of the internal interlocking form **86**. The interlocking forms **81** and **86** have a general flange-like shape configuration when viewed in cross section that is also some what L-shaped with the beads **100** and **101** forming feet of the flange shape that overlap and lock so as to prevent substantial radial movement of the arms **99** of the bone screw **89** relative to the closure plug base **85**. FIGS. **7** and **8** illustrate further variations of the axial shoulder interlocking structure **110** and **130** respectively in the form of a rounded axial bead interlocking form **111** shown in FIG. **7** and a shallow rounded axial bead interlocking form **131** in FIG. **8**. The rounded axial bead interlocking form **111** includes a rounded bead **112** projecting in a direction parallel to an axis **113**. The bead **112** is formed on a thrust surface **114** of an external interlocking form **115** and a rounded groove **116** is formed on a thrust surface **117** of an internal interlocking form **119**. The bead **112** includes a splay resisting surface **120**, while the groove **116** also includes a splay resisting surface **122**.

In a similar manner, the shallow rounded axial bead interlocking form **130** includes a shallow rounded bead **131** formed on a thrust surface **133** of an external interlocking form **134** and a shallow rounded groove **135** formed on a thrust surface **136** of an internal interlocking form **137**. The bead **131** includes a splay resisting surface **140**, and the groove **135** includes a splay resisting surface **141**. The surfaces **140** and **141** engage and abut to resist splaying or significant radial separation movement therebetween.

FIG. **9** illustrates a radial bead embodiment of an implant **150** having a guide and advancement structure **151**. The structure **151** includes a rounded external and bead interlocking form **153** projecting radially from a base **154** and forming a crest **155**. The bead interlocking form **153** has a pair of splay resisting surfaces **158** facing generally toward an axis **156** of rotation of the base **154**. A complementary groove internal interlocking form **160** is part of a screw head **161**. The head interlocking form **160** has a pair of splay resisting surfaces **163** facing generally away from the axis **156**. The structure **151** has the splay resisting surfaces **158** and **163** on thrust surfaces **168** and **169** respectively of the interlocking forms **153** and **160**, as well as on clearance surfaces **170** and **171** thereof. The illustrated radial bead interlocking form **150** is, in some ways, a double sided variation of the rounded axial bead interlocking form of an earlier embodiment.

FIGS. **10** and **11** illustrate a scalloped or scooped embodiment structure **180** including a pair of compound interlocking forms **181** and **182** according to the present invention. The interlocking form **181** is scalloped and, in effect, an inversion of the shallow rounded bead interlocking form similar to that of an earlier embodiment. The interlocking form **182** includes a shallow groove **184** formed in a thrust surface **185** of the external interlocking form **181** of a base **187** and a shallow bead **188** formed on a thrust surface **189** of the interlocking form **182** of a screw head **190**. The groove **184** has a splay resisting surface **193** which cooperates with a complementary splay resisting surface **194** of the bead **188**.

Illustrated in FIG. **12** is another guide and advancement structure **200** associated with a receiver member **201** and a closure member, such as a plug, **202** that is rotated into the receiver member **201**. The structure **200** includes a first interlocking form **205** and a second interlocking form **206** attached to the closure member **202** and receiver member **201** respectively.

The first interlocking form **205** includes an arcuate upper surface **207** with a gripping or locking section **208**. The second interlocking form **206** includes an arcuate lower surface **209** with a gripping or locking section **210**. The interlocking forms **205** and **206** also have respective lower or leading surfaces **214** and **215** respectively that are sufficiently spaced to allow rotation about the axis thereof, but sufficiently close to be snug and not allow substantial movement of the forms **205** and **206** relative to each other in an axial direction without rotation.

FIG. **13** shows an alternative flange shaped embodiment of a guide and advancement structure **230** in accordance with the invention. The structure **230** is mounted on a closure **231** and a receiver **232** so that interlocking forms **233** and **234**, which are seen in cross section, are helically mounted on the closure **231** and receiver **232** respectively.

The first interlocking form **233** is L or flange-shaped in cross section with a vertically or axially extending foot portion **240** with a gripping surface **241**. The second interlocking form **234** generally complements the first and is also L or flange shaped except that a foot **243** thereof is much wider than the foot portion **240**. The foot **243** has a gripping or wraparound surface **245** that abuts the surface **241** during assembly and resist radial movement between the receiver **232** and the closure **231**.

Shown in FIG. **14** is another embodiment of a guide and advancement structure **260** in accordance with the invention. The structure **260** is utilized with a receiver **261** and a closure or plug **262**. The structure **260** has first and second

interlocking forms **263** and **264**. The first interlocking form has an elongate wall **268** with a circular bead **269** attached to an end thereof opposite the closure **262**. The bead **269** has opposed gripping surfaces **270** and **271**. The second interlocking form **264** is shaped to mate with an generally surround the first interlocking form **263** except sufficient clearance is provided to allow the closure **262** to be rotated and advanced into the receiver **263** by sliding tangentially, but not radially. The second interlocking form **264** has a circular cross section channel **270** that receives the bead **269** and a pair of gripping surfaces **273** and **274** that engage and abut against the bead surfaces **270** and **271**.

It is foreseen in accordance with the invention that certain regions of the interlocking forms may be eased or removed to allow for easier use which still maintaining the primary objective of resisting radial movement between the closure plug and the opposed arms of the bone screw to prevent splaying of such arms.

It is also seen in accordance with the invention that the axial aligned extension or depression on the described interlocking forms could in some cases be multiple in nature or formed by an undulating pattern.

It is to be understood that while certain forms of the present invention have been illustrated and described herein, it is not to be limited to the specific forms or arrangement of parts described and shown.

What is claimed and desired to be secured by Letters Patent is as follows:

1. A medical implant having an open receiver member with spaced arms and a closure member having an axis of rotation for closing the receiver member; said implant further comprising:

a) helically wound and mateable first and second interlocking forms; said first interlocking form being mounted on an outer surface of said closure member;

b) said second interlocking form being mounted on an interior surface of said receiver member; said first and second interlocking forms being rotatable upon assembly of said closure member into said receiver member; said first and second interlocking members guiding and advancing said closure member into said receiver upon rotation of said closure member;

c) said first and second interlocking forms each having a cross section, taken in a plane passing through said axis, that is uniform along a substantial length thereof; and

d) said interlocking forms operably resisting radial splaying of said arms during assembly and subsequent use of said implant.

2. The implant according to claim **1** wherein:

a) said first and second interlocking forms each have at least one complete turn.

3. The implant according to claim **1** wherein:

a) at least one of said first and second interlocking forms include at least one axially aligned extension spaced radially outward from whereat each of said first and second forms are mounted on said closure member and said receiver member respectively.

4. The implant according to claim **1** wherein:

a) at least one of said first and second interlocking forms include at least one axially aligned depression spaced radially outward from whereat said first and second interlocking forms are mounted on said closure member and said receiver member respectively.

5. The implant according to claim **1** wherein:

a) said first and second interlocking forms are each helically wound flange shaped and radially extending projections with feet that overlap and prevent radial slippage therebetween during and subsequent to assembly of said closure member into said receiver member.

6. A medical implant having an open receiver member with spaced arms and a closure member having an axis of rotation for closing the receiver member; said implant further comprising:

a) helically wound and mateable first and second interlocking forms; said first interlocking form being mounted on an outer surface of said closure member;

b) said second interlocking form being mounted on an interior surface of said receiver member; said first and second interlocking forms being rotatable at least one full turn with respect to one another upon assembly of said closure member into said receiver member; said first and second interlocking members guiding and advancing said closure member into said receiver upon rotation of said closure member; and

c) said interlocking forms operably resisting radial splaying of said arms during assembly and subsequent use of said implant.

7. In a device wherein a receiver having a pair of spaced sides rotatably receives a closure for closing at least part of the receiver; the improvement comprising:

a) a first helically wound interlocking form on said closure;

b) a second helically wound interlocking form on said receiver; and

c) said first and second interlocking forms mating upon said closure being rotated into said receiver and operably preventing substantial radial splaying of said receiver sides while said closure is positioned within said receiver.

8. The device according to claim **7** wherein:

a) said interlocking forms are each flange like in cross section with a foot portion spaced radially outwardly from a respective closure or receiver and wherein each foot portion projects parallel to said axis of rotation from a remainder of a respective form and said forms radially overlap one another.

9. A guide and advancement structure having first and second interlocking forms wound helically about a common axis during usage, said interlocking forms being located on and enabling engagement and rotational advancement of a first member with respect to a second member respectively, a first of said members being adapted to be an inner member and a second of said members being adapted to be an outer member, and each of said interlocking forms comprising:

a) a first surface extending along a respective interlocking form and adapted to engage a complementary second surface of said second member upon rotating together of said first member relative to said second member; and

b) said first surface having a compound contour thereon such that a grip portion of said first surface is oriented in such a direction relative to said axis so as to resist, by engagement of said first surface with said second surface, a radial splaying of said outer member during assembly of said first member into said second member.

10. The structure as set forth in claim **9** wherein:

a) said first interlocking form is formed as an external interlocking form on said first inner member; and

b) said grip portion of said first surface faces generally toward said axis.

11. The structure as set forth in claim **9** wherein:

a) said first interlocking form is formed as a radially extending external interlocking form on said first inner member; and

b) said grip portion of said first surface is substantially cylindrical and is oriented generally toward said axis.

12. The structure as set forth in claim **9** wherein:

a) said first interlocking form is formed as radially extending external interlocking form on said inner member; and

b) said grip portion of said first interlocking form includes a rounded grip bead projecting in a direction substantially parallel to said axis.

13. The structure as set forth in claim **9** wherein:

a) said first interlocking form is formed as an external interlocking form on said first inner member; and

b) said grip portion includes a grip channel formed in said first surface, said grip channel being formed by a generally concave arcuate surface that creates an axially extending depression.

14. The structure as set forth in claim **9** wherein:

a) said second interlocking form is formed as an internal interlocking form on said second outer member; and

b) said second interlocking form includes a grip portion of said first surface that is substantially cylindrical in cross section and is oriented generally away from said axis.

15. The structure as set forth in claim **9** wherein:

a) said second interlocking form is formed as an internal interlocking form on said second outer member; and

b) said grip portion includes a rounded grip channel formed into said first surface, said grip channel being formed by a generally concave arcuate surface.

16. The structure as set forth in claim **9** wherein:

a) said second interlocking form is formed as an internal interlocking form on said second outer member; and

b) said grip portion includes a rounded grip bead projecting in a direction substantially parallel to said axis.

17. The structure according to claim **9** wherein:

a) said first and second interlocking forms are located in snug proximity to one another during assembly and overlap each other to provide a positive block against substantial radial movement during assembly.

18. A structure including first and second interlocking forms mounted on first and second members respectively and extending helically about a common axis, when joined, providing for engagement and advancement of said first member with respect to said second member, said first member being an inner member with said first interlocking form mounted thereon as an external interlocking form and said second member being an outer member with said second interlocking form mounted thereon as an internal interlocking form, wherein:

a) a first surface extends along said external interlocking form on said first member and is adapted to engage a complementary second surface extending along said internal interlocking form of said second member upon engagement and rotation of said first member with respect to said second member;

b) said first surface having a first compound contour including a first grip portion which is oriented generally to face toward said axis; and

c) said second surface having a second compound contour which is complementary to said first compound contour and which includes a second grip portion which is oriented generally to face away from said axis so as to overlap said first grip portion to thereby resist radially outward spaying of a parts of said outer member.

19. The structure as set forth in claim **18** wherein:

a) said first grip portion of said first surface is substantially cylindrical and is oriented generally toward said axis.

20. The structure as set forth in claim **18** wherein:

a) said first grip portion includes a rounded grip bead projecting from said first surface in a direction substantially parallel to said axis.

21. The structure as set forth in claim **18** wherein:

a) said first grip portion includes a grip channel formed in said first surface, said grip channel being formed as a generally concave arcuate surface.

22. The structure as set forth in claim **18** wherein:

a) said second grip portion of said second surface is substantially cylindrical and is oriented generally away from said axis.

23. The structure as set forth in claim **18** wherein:

a) said second grip portion includes a rounded grip channel formed into said second surface, said grip channel being formed by a generally concave arcuate surface.

24. The structure as set forth in claim **18** wherein:

a) said second grip portion includes a rounded grip bead projecting from said second surface in a direction substantially parallel to said axis.

25. In a medical implant a structure for providing for rotation, guidance and advancement of a first cylindrical closure member in a second receiver member; the improvement in the structure comprising:

a) first and second helically wound and mateable interlocking forms; said first interlocking form extending radially outward from said closure member and said second interlocking form extending radially inward from said receiving member; said closure member having an axis of rotation; said first and second interlocking forms being coaxial with said axis during assembly of said closure member into said receiving member;

b) a first surface extending along said first interlocking form and adapted to engage and overlap a complementary second surface extending along said second interlocking form upon engagement and rotation of said closure member with said receiving member such that the first and second interlocking forms slide tangentially upon rotation and mate;

c) said first surface having a first compound contour including a first grip portion which is oriented generally to face toward said axis;

d) said second surface having a second compound contour which is complementary to said first compound contour and which includes a second grip portion which is oriented to face generally away from said axis and so as to directly face said first grip position to thereby resist radially outward splaying of a portion of said receiving member;

e) said first interlocking form including a first root and a first crest extending helically about said axis to alternatingly form a first root and a first crest; said first crest having a radius greater than said first root;

f) said first grip portion including a grip bead projecting from said first surface in a direction substantially parallel to said axis;

g) said grip bead being positioned at a location spaced from said first root;

h) said second interlocking form including a second root and a second crest extending helically about said interlocking form axis to alternatingly form a second root and a second crest; said second root having a radius greater than said second crest;

i) said second grip portion including a grip channel formed into said second surface; and

j) said grip channel being positioned generally to mate with said grip bead during assembly of said closure member into said receiving member.

26. A first helically wound interlocking form and a second helically wound mating interlocking form having a portion thereof on a pair of spaced walls; said first interlocking form having a trailing surface that engages said second mating interlocking form with a mating surface, wherein:

a) said trailing and mating surfaces are radially non-linear so that said trailing surface lockingly engages said mating surface, when joined, to resist outward relative splaying of the spaced walls.

27. The form according to claim **26** wherein:

a) said trailing surface is generally uniform throughout at least one full turn of said trailing surface.

28. A first helically wound interlocking form and a second helically wound mating interlocking form having portions on a pair of spaced walls; said first interlocking form having a leading surface that engages said second mating interlocking form with a mating surface, wherein:

a) said leading and mating surfaces are radially non-linear so that said leading surface lockingly engages said mating surface, when joined, to resist outward relative splaying of the spaced walls.

29. The form according to claim **28** wherein:

a) said leading surface is generally uniform throughout at least one full turn of said leading surface.

30. A guide and advancement structure having first and second interlocking forms wound helically about a common axis during usage, said interlocking forms being located on and enabling engagement and rotational advancement of a first member with respect to a second member respectively, a first of said members being adapted to be an inner member and a second of said members being adapted to be an outer member, and each of said interlocking forms comprising:

a) a first surface extending along a respective interlocking form and adapted to engage a complementary second surface of said second member upon rotating together of said first member relative to said second member;

b) said first surface having a compound contour thereon such that a grip portion of said first surface is oriented in such a direction relative to said axis so as to resist, by engagement of said first surface with said second surface, a radial splaying of said outer member during assembly of said first member into said second member; and wherein

c) said first interlocking form extends radially outward from said first inner member and said second interlocking form extends radially inward from said second outer member;

d) said first interlocking form includes a root and a crest extending helically about said axis to form an alternating root and crest, said crest having a radius greater than said root; and

e) said first interlocking form has a greater cross sectional area in a region spaced radially outward of said root than adjacent said root.

31. A guide and advancement structure having first and second interlocking forms wound helically about a common axis during usage, said interlocking forms being located on and enabling engagement and rotational advancement of a first member with respect to a second member respectively, a first of said members being adapted to be an inner member and a second of said members being adapted to be an outer member, and each of said interlocking forms comprising:

a) a first surface extending along a respective interlocking form and adapted to engage a complementary second surface of said second member upon rotating together of said first member relative to said second member;

b) said first surface having a compound contour thereon such that a grip portion of said first surface is oriented in such a direction relative to said axis so as to resist, by engagement of said first surface with said second surface, a radial splaying of said outer member during assembly of said first member into said second member;

c) said first interlocking form is formed as an external interlocking form on said first inner member;

d) said first interlocking form including a root and a crest extending helically about said axis to form an alternating root and crest, said crest having a radius greater than said root;

e) said grip portion including a rounded grip bead projecting from said first surface in a direction substantially parallel to said axis; and

f) said grip bead being located medially between said root and said crest on said first surface.

32. A guide and advancement structure having first and second interlocking forms wound helically about a common axis during usage, said interlocking forms being located on and enabling engagement and rotational advancement of a first member with respect to a second member respectively, a first of said members being adapted to be an inner member and a second of said members being adapted to be an outer member, and each of said interlocking forms comprising:

a) a first surface extending along a respective interlocking form and adapted to engage a complementary second surface of said second member upon rotating together of said first member relative to said second member;

b) said first surface having a compound contour thereon such that a grip portion of said first surface is oriented in such a direction relative to said axis so as to resist, by engagement of said first surface with said second surface, a radial splaying of said outer member during assembly of said first member into said second member;

c) said second interlocking form is formed as an internal interlocking form on said second outer member;

d) said interlocking form includes a root and a crest extending helically about said axis to alternatingly form a root and a crest, said root having a radius greater than said crest; and

e) said second interlocking form has a greater cross sectional area located in a region radially inward of said root toward said axis than adjacent said root.

33. A guide and advancement structure having first and second interlocking forms wound helically about a common axis during usage, said interlocking forms being located on and enabling engagement and rotational advancement of a first member with respect to a second member respectively, a first of said members being adapted to be an inner member and a second of said members being adapted to be an outer member, and each of said interlocking forms comprising:

a) a first surface extending along a respective interlocking form and adapted to engage a complementary second surface of said second member upon rotating together of said first member relative to said second member; and

b) said first surface having a compound contour thereon such that a grip portion of said first surface is oriented in such a direction relative to said axis so as to resist, by engagement of said first surface with said second surface, a radial splaying of said outer member during assembly of said first member into said second member;

c) said second interlocking form is formed as an internal interlocking form on said second outer member; and

d) said grip portion of said first surface faces generally away from said axis.

34. A guide and advancement structure having first and second interlocking forms wound helically about a common axis during usage, said interlocking forms being located on and enabling engagement and rotational advancement of a first member with respect to a second member respectively, a first of said members being adapted to be an inner member and a second of said members being adapted to be an outer member, and each of said interlocking forms comprising:

a) a first surface extending along a respective interlocking form and adapted to engage a complementary second surface of said second member upon rotating together of said first member relative to said second member; and

b) said first surface having a compound contour thereon such that a grip portion of said first surface is oriented in such a direction relative to said axis so as to resist, by engagement of said first surface with said second surface, a radial splaying of said outer member during assembly of said first member into said second member;

c) said second interlocking form being formed as an internal interlocking form on said second outer member;

d) said interlocking form including a root and a crest extending helically about said axis to alternatingly form a root and a crest, said root having a radius greater than said crest;

e) said grip portion including a rounded grip channel formed into said first surface, said grip channel being formed by a generally concave arcuate surface; and

f) said grip channel being positioned radially from said root and medially with respect to said root and said crest of said first surface.

35. A structure including first and second interlocking forms mounted on first and second members respectively and extending helically about a common axis, when joined, providing for engagement and advancement of said first member with respect to said second member, said first member being an inner member with said first interlocking form mounted thereon as an external interlocking form and said second member being an outer member with said second interlocking form mounted thereon as an internal interlocking form, wherein:

a) a first surface extends along said external interlocking form on said first member and is adapted to engage a complementary second surface extending along said internal interlocking form of said second member upon engagement and rotation of said first member with respect to said second member;

b) said first surface having a first compound contour including a first grip portion which is oriented generally to face toward said axis;

c) said second surface having a second compound contour which is complementary to said first compound contour and which includes a second grip portion which is oriented generally to face away from said axis so as to overlap said first grip portion to thereby resist, radially outward spaying of a parts of said outer member;

d) said external interlocking form including a root and a crest extending helically about said axis to form an member with respect to said second member, said first member being an inner member with said first interlocking form mounted thereon as an external interlocking form and said second member being an outer member with said second interlocking form mounted thereon as an internal interlocking form, wherein:

a) a first surface extends along said external interlocking form on said first member and is adapted to engage a complementary second surface extending along said internal interlocking form of said second member upon engagement and rotation of said first member with respect to said second member;

b) said first surface having a first compound contour including a first grip portion which is oriented generally to face toward said axis;

c) said second surface having a second compound contour which is complementary to said first compound contour and which includes a second grip portion which is oriented generally to face away from said axis so as to overlap said first grip portion to thereby resist, radially outward spaying of a parts of said outer member;

d) said external interlocking form including a root and a crest extending helically about said axis to form an alternating root and crest, said crest having a radius greater than said root; and

e) said external interlocking form having a greater cross sectional area parallel to said axis at a location spaced radially outward of said root than adjacent said root.

36. A structure including first and second interlocking forms mounted on first and second members respectively and extending helically about a common axis, when joined, providing for engagement and advancement of said first member with respect to said second member, said first member being an inner member with said first interlocking form mounted thereon as an external interlocking form and said second member being an outer member with said second interlocking form mounted thereon as an internal interlocking form, wherein:

a) a first surface extends along said external interlocking form on said first member and is adapted to engage a complementary second surface extending along said internal interlocking form of said second member upon engagement and rotation of said first member with respect to said second member;

b) said first surface having a first compound contour including a first grip portion which is oriented generally to face toward said axis;

c) said second surface having a second compound contour which is complementary to said first compound contour and which includes a second grip portion which is oriented generally to face away from said axis so as to overlap said first grip portion to thereby resist, radially outward spaying of a parts of said outer member;

d) said external interlocking form including a root and a crest extending helically about said axis to alternatingly

form a root and a crest, said crest having a radius greater than said root;

e) said first grip portion including a rounded grip bead projecting from said first surface in a direction substantially parallel to said axis; and

f) said grip bead being positioned medially between said root and said crest on said first surface.

37. A structure including first and second interlocking forms mounted on first and second members respectively and extending helically about a common axis, when joined, providing for engagement and advancement of said first member with respect to said second member, said first member being an inner member with said first interlocking form mounted thereon as an external interlocking form and said second member being an outer member with said second interlocking form mounted thereon as an internal interlocking form, wherein:

a) a first surface extends along said external interlocking form on said first member and is adapted to engage a complementary second surface extending along said internal interlocking form of said second member upon engagement and rotation of said first member with respect to said second member;

b) said first surface having a first compound contour including a first grip portion which is oriented generally to face toward said axis;

c) said second surface having a second compound contour which is complementary to said first compound contour and which includes a second grip portion which is oriented generally to face away from said axis so as to overlap said first grip portion to thereby resist, radially outward spaying of a parts of said outer member;

d) said internal interlocking form including a root and a crest extending helically about said axis to alternatingly form a root and a crest, said root having a radius greater than said crest; and

e) said internal interlocking form having a greater cross sectional area at a location radially inward of said root toward said axis than adjacent said root.

38. A structure including first and second interlocking forms mounted on first and second members respectively and extending helically about a common axis, when joined, providing for engagement and advancement of said first member with respect to said second member, said first member being an inner member with said first interlocking form mounted thereon as an external interlocking form and said second member being an outer member with said second interlocking form mounted thereon as an internal interlocking form, wherein:

a) a first surface extends along said external interlocking form on said first member and is adapted to engage a complementary second surface extending along said internal interlocking form of said second member upon engagement and rotation of said first member with respect to said second member;

b) said first surface having a first compound contour including a first grip portion which is oriented generally to face toward said axis;

c) said second surface having a second compound contour which is complementary to said first compound contour and which includes a second grip portion which is oriented generally to face away from said axis so as to overlap said first grip portion to thereby resist, radially outward spaying of a parts of said outer member;

d) said internal interlocking form including a root and a crest extending helically about said axis to alternatingly form a root and a crest, said root having a radius greater than said crest;

e) said second grip portion including a rounded grip channel formed into said second surface; and

f) said grip channel being positioned medially between said root and said crest on said second surface.

39. A method for resisting arm splaying in a bone screw having a head with a pair of spaced arms; said method comprising the steps of:

a) providing a closure that is sized and shaped to be located between said arms;

b) placing a portion of a first interlocking and helical wound form on facing sides of each of said arms;

c) placing a second interlocking helical wound form on said closure that is sized and shaped to rotatably mate with said first interlocking form; and

d) rotating and advancing said closure between said arms so as to interlockably join said closure to both of said arms.

* * * * *

UNITED STATES PATENT AND TRADEMARK OFFICE

CERTIFICATE OF CORRECTION

PATENT NO. : 6,726,689 B2
DATED : April 27, 2004
INVENTOR(S) : Roger P. Jackson

It is certified that error appears in the above-identified patent and that said Letters Patent is hereby corrected as shown below:

Column 21, line 52 – Column 22, line 39,
Please amend Claim 35 as follows:
--35. A structure including first and second interlocking forms mounted on first and second members respectively and extending helically about a common axis, when joined, providing for engagement and advancement of said first member with respect to said second member, said first member being an inner member with said first interlocking form mounted thereon as an external interlocking form and said second member being an outer member with said second interlocking form mounted thereon as an internal interlocking form, wherein:
a) a first surface extends along said external interlocking form on said first member and is adapted to engage a complementary second surface extending along said internal interlocking form of said second member upon engagement and rotation of said first member with respect to said second member;
b) said first surface having a first compound contour including a first grip portion which is oriented generally to face toward said axis;
c) said second surface having a second compound contour which is complementary to said first compound contour and which includes a second grip portion which is oriented generally to face away from said axis so as to overlap said first grip portion to thereby resist, radially outward spaying of a parts of said outer member;
d) said external interlocking form including a root and a crest extending helically about said axis to form an alternating root and crest, said crest having a radius greater than said root; and
e) said external interlocking form having a greater cross sectional area parallel to said axis at location spaced radially outward of said root than adjacent said root.--

Signed and Sealed this

Third Day of May, 2005

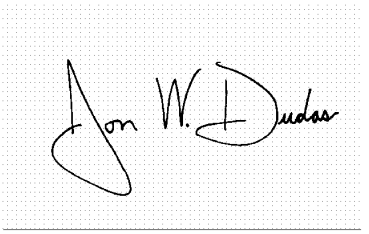

JON W. DUDAS
Director of the United States Patent and Trademark Office