US006726687B2

(12) **United States Patent**
Jackson

(10) **Patent No.: US 6,726,687 B2**
(45) **Date of Patent: Apr. 27, 2004**

(54) **CLOSURE PLUG FOR OPEN-HEADED MEDICAL IMPLANT**

(76) Inventor: **Roger P. Jackson**, 6600 Indian La., Mission Hills, KS (US) 66208

(*) Notice: Subject to any disclaimer, the term of this patent is extended or adjusted under 35 U.S.C. 154(b) by 377 days.

(21) Appl. No.: **10/014,434**

(22) Filed: **Nov. 9, 2001**

(65) **Prior Publication Data**

US 2002/0072751 A1 Jun. 13, 2002

Related U.S. Application Data

(63) Continuation-in-part of application No. 09/732,528, filed on Dec. 8, 2000, now Pat. No. 6,454,772.

(51) **Int. Cl.**[7] **A61B 17/58**
(52) **U.S. Cl.** **606/61**; 606/73
(58) **Field of Search** 411/2–5, 383, 411/405; 606/72, 73, 61, 54, 55, 56, 57, 104; 52/584.1; D8/387; 473/336; 285/3; 184/105.3

(56) **References Cited**

U.S. PATENT DOCUMENTS

791,548	A	6/1905	Fischer
1,300,275	A	4/1919	Johnson
2,201,087	A	5/1940	Hallowell
2,239,352	A	4/1941	Cherry
2,295,314	A	9/1942	Whitney
2,532,815	A	12/1950	Kindsvatter
2,553,337	A	5/1951	Shafer
2,778,265	A	1/1957	Brown
2,877,681	A	3/1959	Brown
2,927,332	A	3/1960	Moore
3,143,029	A	8/1964	Brown
D200,217	S	2/1965	Curtiss
3,370,341	A	2/1968	Allsop
3,498,174	A	3/1970	Schuster et al.
3,584,667	A	6/1971	Reiland
3,812,757	A	5/1974	Reiland

(List continued on next page.)

FOREIGN PATENT DOCUMENTS

DE	3630863	3/1988
DE	373809	5/1989
EP	195455	9/1986
EP	172130	2/1987
EP	276153	7/1988
EP	465158	1/1993
FR	2467312	4/1981
GB	203508	9/1923
GB	2082709	3/1982
WO	PCT92/03100	3/1992
WO	PCT94/10927	5/1994
WO	PCT94/10944	5/1994
WO	PCT96/06576	3/1996

OTHER PUBLICATIONS

Two Drawings of Sofamor dated Mar. 10, 1994 and Sep. 20, 1994.

Primary Examiner—Julian W. Woo
(74) *Attorney, Agent, or Firm*—John C. McMahon

(57) **ABSTRACT**

A closure for an open headed medical implant, such as a bone screw. The closure having a cylindrical body having an axis of rotation and also having a threaded radially outer surface. The body having a plurality of bores that open onto a top surface of the body and that are parallel to but spaced from the axis of rotation. In one embodiment the closure also has a break-off head centrally attached by a neck to the top surface of the body. Preferably, the body also includes an axial threaded bore that extends from a bottom to the top of the surface body, but that is only exposed when the break-off head breaks away. In another embodiment a tool is used to insert the closure in the implant without a break-off head and a central threaded bore of the closure receives a set screw.

13 Claims, 5 Drawing Sheets

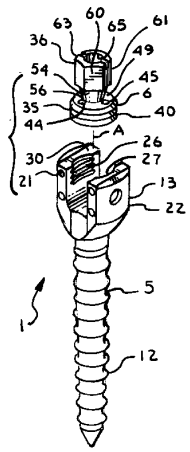

U.S. PATENT DOCUMENTS

3,963,322 A 6/1976 Cryctko
4,269,246 A 5/1981 Larson et al.
4,492,500 A 1/1985 Ewing
4,506,917 A 3/1985 Hansen Arne
4,577,448 A * 3/1986 Howorth 52/584.1
4,641,636 A 2/1987 Cotrel
4,763,644 A 8/1988 Webb
4,764,068 A 8/1988 Crispell
4,790,297 A 12/1988 Luque
4,815,453 A 3/1989 Cotrel
4,838,264 A 6/1989 Bremer et al.
5,005,562 A 4/1991 Cotrel
5,026,373 A 6/1991 Ray et al.
5,067,955 A 11/1991 Cotrel
5,073,074 A 12/1991 Corrigan et al.
5,129,388 A 7/1992 Vignaud et al.
5,147,360 A 9/1992 Dubousset
5,154,719 A 10/1992 Cotrel
5,261,907 A 11/1993 Vignaud et al.
5,261,912 A 11/1993 Frigg
5,282,707 A 2/1994 Palm
5,312,404 A 5/1994 Asher et al.
5,334,203 A * 8/1994 Wagner 606/61
5,346,493 A 9/1994 Stahurski et al.
5,364,400 A 11/1994 Rego, Jr. et al.
5,382,248 A 1/1995 Jacobson et al.
5,385,583 A 1/1995 Cotrel
5,387,212 A * 2/1995 Yuan et al. 606/61
5,487,742 A 1/1996 Cotrel
5,496,321 A 3/1996 Puno et al.
5,499,892 A 3/1996 Reed
5,507,747 A 4/1996 Yuan et al.
5,562,663 A 10/1996 Wisnewski et al.
5,591,235 A 1/1997 Kuslich
5,630,817 A 5/1997 Rokegem et al.
5,643,260 A 7/1997 Doherty
5,653,710 A 8/1997 Harle
5,697,929 A 12/1997 Mellinger
D407,302 S * 3/1999 Lawson D8/387
5,879,350 A 3/1999 Sherman et al.
6,149,533 A * 11/2000 Finn 473/336
6,193,719 B1 2/2001 Gournay et al.
6,224,598 B1 5/2001 Jackson
6,322,108 B1 * 11/2001 Riesselmann et al. 285/3
6,349,794 B2 * 2/2002 Spencer 184/105.3

* cited by examiner

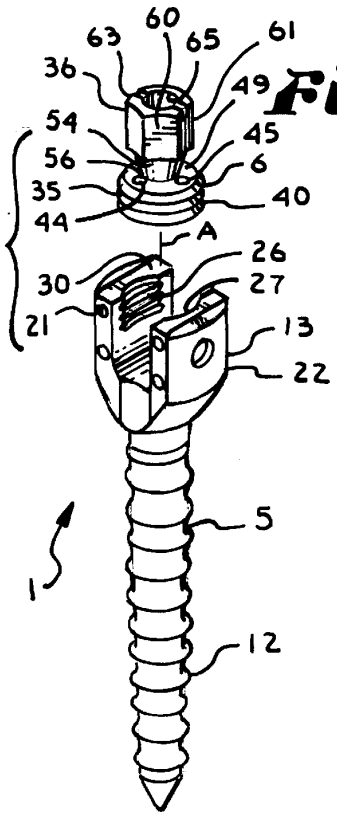

Fig.1.

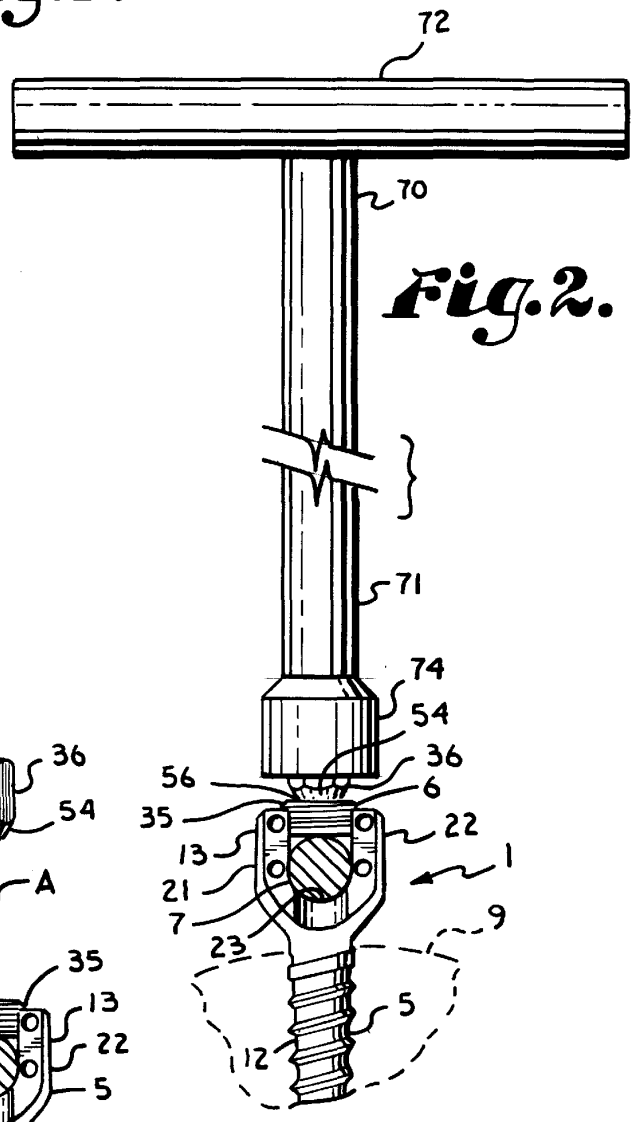

Fig.2.

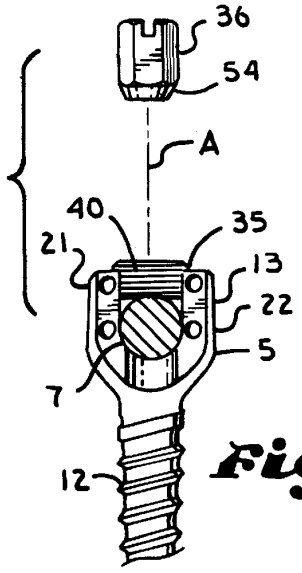

Fig.3.

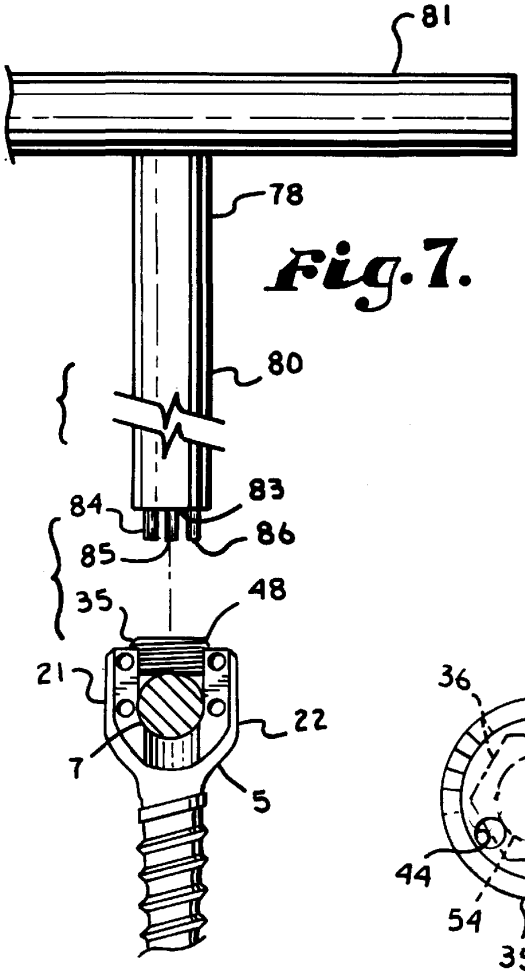

Fig. 7.

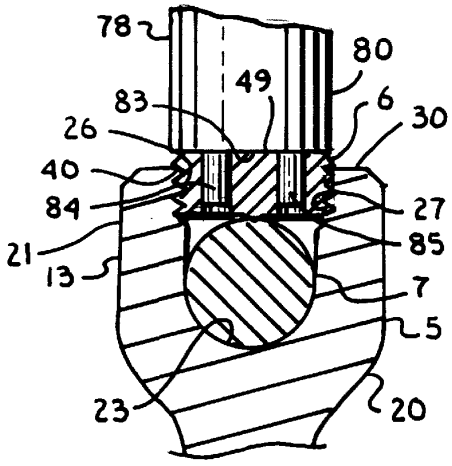

Fig. 8.

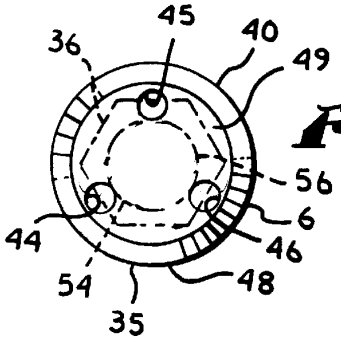

Fig. 5.

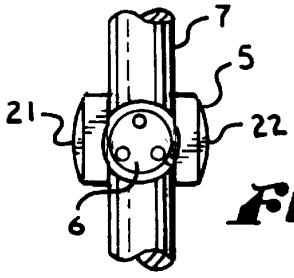

Fig. 4.

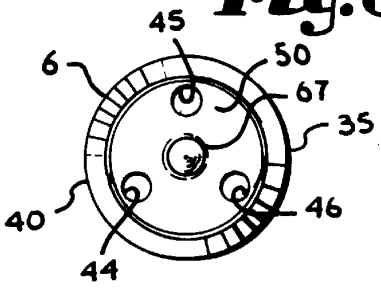

Fig. 6.

Fig. 9.

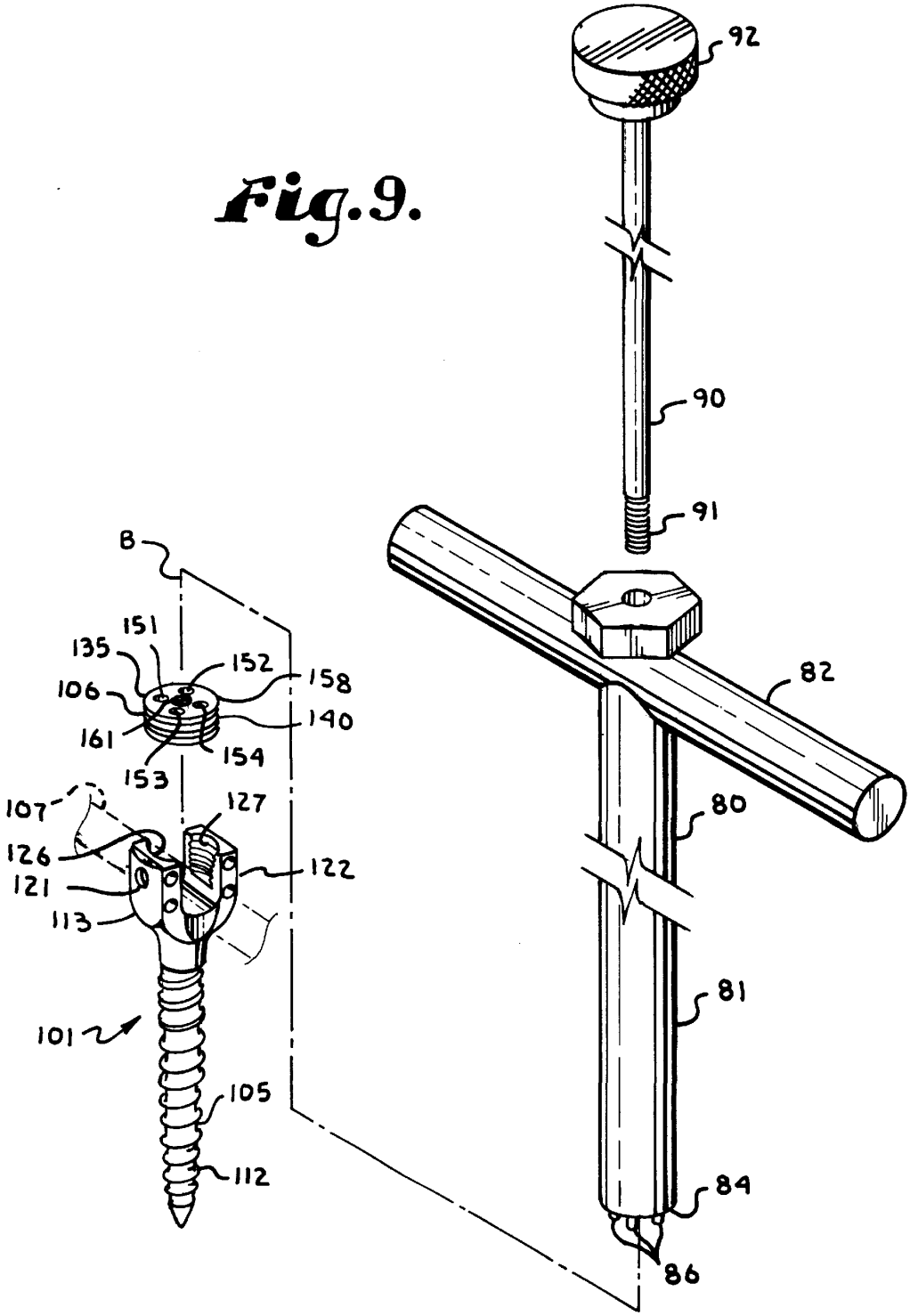
92
90
91
82
80
81
84
86
8
151
135
152
158
106
140
161
154
153
107
127
126
122
121
113
101
105
112

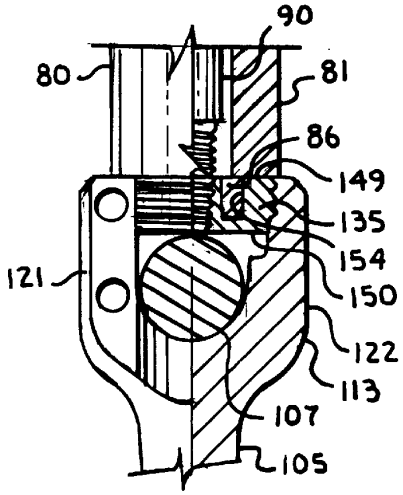

Fig.10.

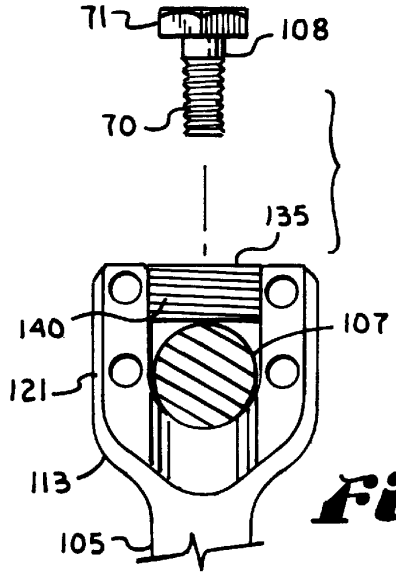

Fig.11.

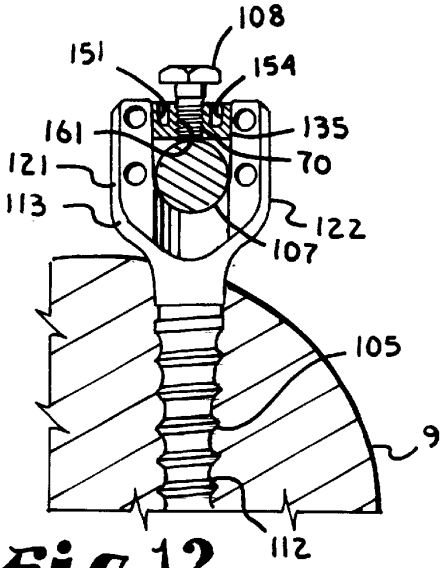

Fig.12.

Fig.13.

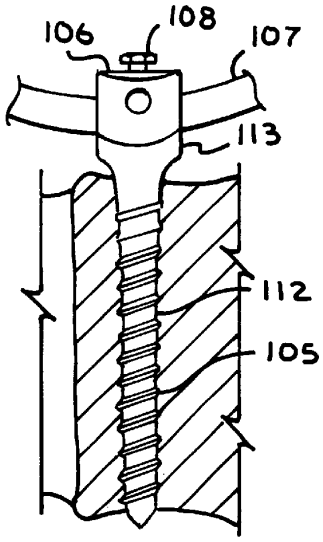

Fig.14.

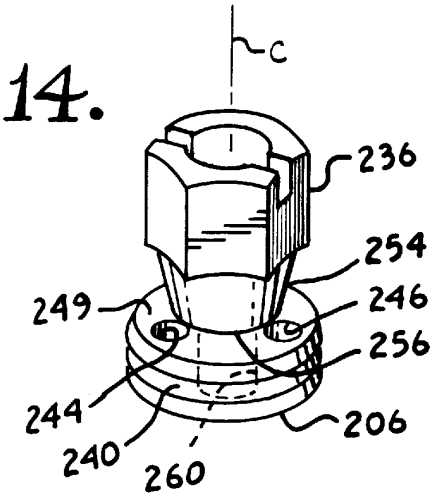

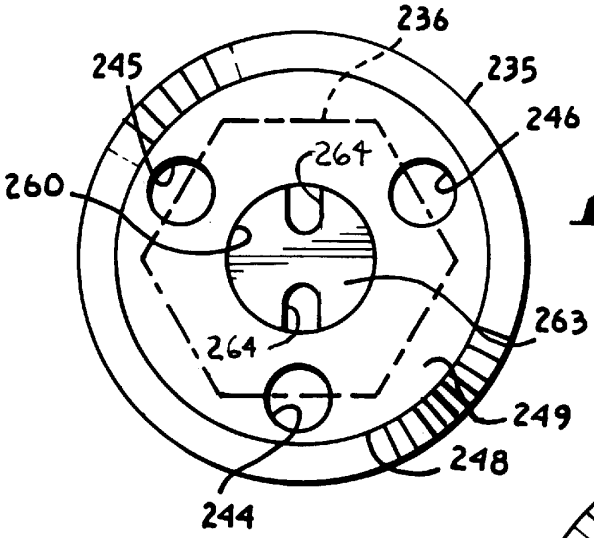

Fig.15.

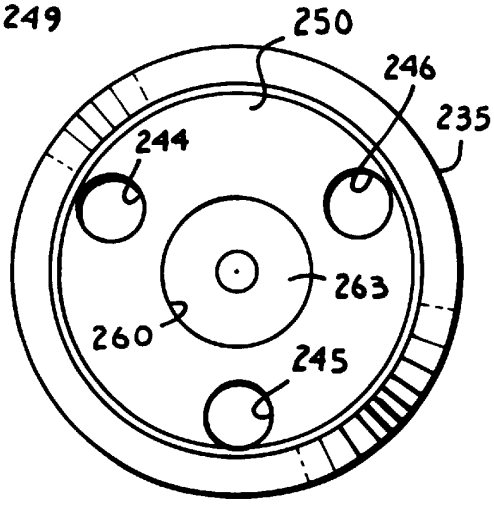

Fig.16.

CLOSURE PLUG FOR OPEN-HEADED MEDICAL IMPLANT

BACKGROUND OF THE INVENTION

The present invention is directed to an open headed medical implant and, in particular, to a closure for closing the head of an open headed bone screw, hook or the like.

Bone screws are used especially in spinal surgery to support and position various implants needed to repair a spine that has suffered injury, illness or genetic defect. Bone screws of this type are screwed into the vertebrae of the spine and have a head that projects outside the bone which receives other implants, such as rods, that extend along the spine. Bone screws are of two general types which are either open headed or closed headed. Hooks and certain other implants also sometimes have open heads. The present application is directed to open headed bone screws and related implants such as hooks and the like that have such an open head to receive another implant.

In open headed bone screws and related implants, the head includes two upright arms that form a channel therebetween. The channel is sized to receive a rod or the like and is open to make it easier to place the rod in the head. The rod must then be tightly held or locked in the head to prevent relative movement between implants after the surgery. To hold the rod in the head, plugs have been used that are screwed into threads on the interior surfaces of the arms.

The present invention is directed especially to improvements in such plugs or closures that make them easier to insert in the head, that better ensure that the plug effectively secures the rod so that the rod does not later slip, that allow the plugs to be easily removed should the overall implant system require rearrangement and which provide a comparatively low profile, so as reduce trauma and irritation to the surrounding tissues of the patient.

SUMMARY OF THE INVENTION

A closure is provided for an open headed implant, especially a bone screw or hook for use in spinal surgery. The closure has a cylindrical shaped body with an axis of rotation. The body has a radially outer surface that is threaded with a thread that is sized and shaped to be received in mating threads on interior surfaces of arms of the implant head. The closure is operably threaded into the head of the implant to capture a rod or other part of an overall spinal support system. The closure captures and locks such a rod in position relative to the implant to prevent rotation or axial movement between the joined parts.

The closure body has a top surface and a bottom surface with a plurality of bores extending parallel to the axis of rotation into the body from the top surface. The bores are positioned in spaced relationship to one another and to the axis of rotation. The bores are sized and shaped to cooperatively mate with posts on a tool to allow removal of the closure from the implant after insertion, should such be necessary. In some instances the tool may also be used to install the closure in the implant.

In one embodiment the closure also includes a break-off head centrally mounted by a neck on the top surface of the body. The break-off head is adapted to receive a socket tool and be rotated thereby during installation. The break-off head is also designed to break from the body at a break-off point or location which is preferably whereat the neck intersects with the top surface of the body; when a prese-

lected torque is applied to the break-off head. When the break-off head is broken away, the bores that are adapted to mate with a removal tool become exposed.

In a second embodiment the body includes a central threaded bore that receives a set screw. The body is then used for capture of a rod or the like and the set screw is used to lock the rod or the like in position relative to the implant.

In a third embodiment, a body includes both a break-off head and a central threaded bore that is covered by the break-off head until the head breaks away, after which the threaded bore is exposed at the top surface of the body to receive a set screw.

OBJECTS AND ADVANTAGES OF THE INVENTION

Therefore, the objects of the present invention are: to provide a closure for an open ended implant that provides a plurality of spaced bores that are offset from an axis of rotation of the closure and that cooperate with a tool to allow removal of the closure; to provide such an implant having a closure with a break off head for mating with an insertion tool for inserting the closure into the implant; to provide such an implant wherein the removal bores are not accessible for effective access, when the closure is in the implant until the break-off head is broken away; to provide such an implant having a closure wherein a closure body has an axially centered threaded bore and including a set screw sized and shaped to be threaded into and extend from the bottom of the closure threaded bore when fully inserted therein; to provide such an implant having a break-off head joined by a neck to a body of the closure and centered on a top of the closure with the body also having a central threaded bore that extends from a bottom to the top of the closure body, but the threaded bore is unaccessible at the top of the body until the break-off head breaks from the body; to provide such an implant that strongly grips a rod or the like received in the implant and that provides a relatively low profile; and to provide such an implant and closure therefore that is relatively easy to use, comparatively easy to produce and is especially well suited for the intended use thereof.

Other objects and advantages of this invention will become apparent from the following description taken in conjunction with the accompanying drawings wherein are set forth, by way of illustration and example, certain embodiments of this invention.

The drawings constitute a part of this specification and include exemplary embodiments of the present invention and illustrate various objects and features thereof.

BRIEF DESCRIPTION OF THE DRAWINGS

FIG. **1** is an exploded perspective view of a bone screw type implant and closure cap in accordance with the present invention prior to insertion of the closure cap into a head of the bone screw.

FIG. **2** is a fragmentary side elevational view of the bone screw with a rod and the closure received therein and with a tool being utilized to insert the closure and provide torque to the break-off head of the closure and further with the bone screw shown embedded in a bone that is indicated by phantom lines.

FIG. **3** is a fragmentary and exploded side elevational view of the bone screw, rod and closure with the break-off head of the closure being shown broken therefrom.

FIG. **4** is a fragmentary top plan view of the bone screw, rod and closure with the break-off head removed.

FIG. **5** is a top plan view of the closure with the break-off head broken therefrom, but shown in phantom.

FIG. **6** is a bottom plan view of the closure.

FIG. **7** is an exploded and fragmentary side elevational view of the bone screw, rod and closure showing a removal tool positioned above the closure.

FIG. **8** is a fragmentary and enlarged view of the bone screw, rod and closure shown in FIG. **7** with the removal tool inserted into the closure and with portions of the bone screw and closure broken away to show detail thereof.

FIG. **9** is an exploded perspective view of a modified bone screw and closure in accordance with the present invention, also showing a rod received in a head of the bone screw in phantom lines and a tool for use in inserting the closure into and removing the closure from the head of the bone screw.

FIG. **10** is a side elevational view of the bone screw, rod, closure and tool of the second embodiment of the invention with portions broken away to show internal detail thereof.

FIG. **11** is a fragmentary side elevational view of the bone screw, rod and closure also showing a set screw that is positioned to be received in the closure.

FIG. **12** is a fragmentary side elevational view showing the bone screw, rod, closure and closure set screw positioned in a vertebrae that is shown in cross-section.

FIG. **13** is a front elevational view of the bone screw, rod and closure shown mounted in a vertebrae that is shown in cross-section.

FIG. **14** is a side elevational view of a closure in accordance with a second modified embodiment of the present invention.

FIG. **15** is a top plan view of the closure of the second modified embodiment with a break-off head thereof broken away.

FIG. **16** is a bottom plan view of the closure of the second modified embodiment of the invention.

DETAILED DESCRIPTION OF THE INVENTION

As required, detailed embodiments of the present invention are disclosed herein; however, it is to be understood that the disclosed embodiments are merely exemplary of the invention, which may be embodied in various forms. Therefore, specific structural and functional details disclosed herein are not to be interpreted as limiting, but merely as a basis for the claims and as a representative basis for teaching one skilled in the art to variously employ the present invention in virtually any appropriately detailed structure.

The reference numeral **1** generally indicates a first embodiment of a medical implant in accordance with the present invention which is shown in FIGS. **1** to **8**. The implant **1** includes a bone screw **5**, a closure **6** for the bone screw and a rod **7**. The implant is received in a vertebrae **9**, typically in conjunction with other implants that are not shown. The closure **6** also functions in conjunction with other open-headed implants, such as hooks and the like.

The bone screw **5** includes a shank **12** and a head **13**. The shank **12** is threaded with a coarse flighting-like thread **16** that is threaded into the vertebrae **9** so as to secure and support the bone screw **5** and allow the head **13** to extend from the vertebrae **9**.

The bone screw head **13** includes a base **20** with a pair of upstanding spaced arms **21** and **22** on opposite sides of the base **20** forming a generally U-shaped configuration when viewed from the side and defining a channel **23** therebetween. The channel **23** is sized and shaped to receive the rod **7**.

The arms **21** and **22** each include an interior threaded surface **26** and **27** respectively. The threaded surfaces **26** and **27** are spaced and not connected so as to present only a partial threadform which each face one another and cooperate with the closure **6**, as is noted below. In the illustrated embodiment, the threaded surfaces **26** and **27** extend from a top **30** of the bone screw only partially down the arms **21** and **22**.

The closure **6** includes a body **35** and a break-off head **36**. In the present embodiment shown in FIGS. **1** through **8** the closure body **35** is generally cylindrical in shape and has a radially outward external threaded surface **40** that extends 360° about an axis of rotation indicated by the reference letter "A". That is, the threaded surface has a threadform located thereon that entirely encircles the outer threaded surface **40** of the body **35** and extends entirely from top to bottom. The threaded surface **40** is provided with a thread that is sized, shaped and configured to rotatably mate with the threaded surfaces **26** and **27** of the arms **21** and **22**, so that the closure body **35** may be threaded into the bone screw head, as is shown in FIG. **2**.

The closure body **35** also includes three bores **44**, **45** and **46** that are aligned to be parallel with the axis of rotation. The bores **44**, **45** and **46** are spaced both from the axis of rotation A and from a periphery **48** of a top **49** of the body. The bores **44**, **45** and **46** extend from the body top **49** to a bottom surface **50** of the body **35** in the present embodiment. Preferably the bores **44**, **45** and **46** are equally spaced from one another and are approximately equally radially spaced outward from the axis of rotation A. In the embodiment illustrated in FIGS. **1** through **8**, the bores **44**, **45** and **46** are spaced at approximately 120° from one another.

The break-off head **36** includes a neck **54** that joins with the body top **49** at a break-off location **56**. Preferably the break-off location **56** is generally coplanar with the body top **49**, so the break-off is clean and low profile. The break-off location is normally determined by the location whereat the neck **54** is smallest in cross-section or can be triggered by an external groove. The neck **54** also converges somewhat from the remainder of the break-off head **36** to the break-off location **56**.

The break-off head **36** includes a number of facets or panels which are aligned to be parallel to the axis of rotation A and which are joined together to form a polyhedral shape typically associated with a structure to be received in a socket-type tool. A combined surface **61** of the facets **60** forms such a polyhedral shape. A top surface **63** of the break-off head **36** has axially located therein a non-threaded bore **65** for operably receiving a tool during implantation. The bottom surface **50** of the body **35** includes a conical shaped and axially aligned point **67**.

A tool **70** is illustrated in FIG. **2** for cooperatively inserting the closure **6** into the bone screw head **13**. The tool **70** has an elongate shank **71** with a handle **72** sized and shaped to allow a user to rotate the tool **70** clockwise about the axis of rotation A associated with the closure **6**. The tool **70** also has a socket type head **74** opposite the handle **72** that is sized and shaped to snugly receive the outer surface **61** of the break off head **36** as is shown in FIG. **2**.

During assembly, the rod **7** which is elongate and generally circular in cross-section is placed within the bone screw channel **23** and the closure **6** is then threaded into the bone screw head **13**. The tool **70** is used to rotate the closure **6**

until it engages the rod **7** and urges the rod **7** to seat tightly and snugly on the bone screw head base **20** at the bottom of the channel **23**. The point **67** engages and digs into the rod **7**. As additional torque is applied to the tool **70**, a preselected torque is eventually reached (for example 90 inch pounds) where the break-off head **36** breaks from the closure body **35** at the break-off location **56** and separates therefrom, such as is shown in FIG. **3**.

FIGS. **3** and **4** illustrate the closure **6** operably positioned within the bone screw head **13**. FIG. **5** illustrates the closure **6** with the break-off head **36** removed, but shown in phantom to illustrate the position of the break-off head **36** relative to the bores **44**, **45** and **46**.

In certain circumstances, it is necessary to remove the closure **6** to readjust the position of the rod **7** or to make some other change in the implant configuration. As mentioned before, the implant **1** is typically a part of an overall system and is normally used to provide support to damaged, injured or missing vertebra of the spinal column. When it is necessary to readjust the system, the closure **6** is removed by utilization of the second tool **78**. The tool **78** includes a shank **80** that has an axis of rotation during use that is coaxial with the axis of rotation A of the closure **6**. The shank **80** is attached at one end to a handle **81** to provide a grasp and a means of turning the tool **78** by user. Opposite the handle **81**, the shank **80** has a flat surface **83** from which three pegs or posts **84**, **85** and **86** project. The posts **84**, **85** and **86** are parallel to the axis of rotation of the tool **78** and are sized, shaped and positioned so as to be snugly receivable in the closure bores **44**, **45** and **46**, subsequent to removal of the break-off head **36**. The tool **78** is shown in position above the closure body **35** in FIG. **7** just prior to insertion of the posts **84**, **85** and **86** into respective bores **44**, **45** and **46**. The tool **78** is shown positioned with the posts **84**, **85** and **86** in the respective bores **44**, **45** and **46** in FIG. **8**. The purpose of the tool **70** is to allow user to rotate the closure body **35** counter-clockwise and remove the body **35** from the bone screw head **13** after the closure **6** has been seated therein. In this way the channel **23** can be reopened and the rod **7** removed or repositioned relative to the bone screw head **13**.

While the non-axially located bores **44**, **45** and **46** of the present embodiment are located between the break-off head neck **54** and the periphery **48**, it is foreseen that one or more non-axial bores of this type could partially or entirely intersect with the neck **54** so as to become fully open or exposed at the closure top surface **49** only when a break-off head associated with such a neck breaks from the closure body.

Illustrated in FIGS. **9** to **13** is second embodiment or first modified embodiment of an implant in accordance with the present invention that is generally identified by the reference numeral **101**. The implant **101** includes a bone screw **105**, a closure **106**, a rod **107** and a set screw **108**.

The bone screw **105** except for the closure is essentially the same as the bone screw **5** and, therefore, will not be described in detail. Reference is made to the description of bone screw **5** for additional detail. The bone screw **105** has a shank **112** and a head **113**. Upright arms **121** and **122** of the head **113** have inner or interior facing and threaded surfaces **126** and **127**.

The rod **107** is elongate and has a generally circular cross section for being received in the head **113** beneath the closure **106**.

The closure **106** is similar in some respects to the closure **6**, but is installed in a different manner. In particular, the closure **106** has a generally cylindrical shaped body **135** that has a threaded radially outward surface **140** that has a thread thereon that is sized, shaped and positioned to threadedly mate with threads of the arm threaded surfaces **126** and **127**, as seen in FIG. **10**. The thread can be a conventional V-thread, a buttress thread, a reverse angle thread or other threads related to reverse angle threads in that they exert forces to draw or pull the arms **121** and **122** toward one another rather than cause them to splay or open at the top.

The body **135** also has a top surface **149** and a bottom surface **150**. Positioned to extend downwardly into the body **135** form the top surface **149** are four equally spaced bores **151**, **152**, **153** and **154** that do not extend entirely through the body **135** from top to bottom. The bores **151**, **152**, **153** and **154** are spaced form and positioned between both a central axis B and a periphery **158** of the body top surface **149**. Each bore **151**, **152**, **153** and **154** is positioned at approximately 90° relative to adjacent bores **151**, **152**, **153** and **154**.

Located axially and centrally in the body **135** is a threaded bore **161**. The threaded bore **161** extends between the top surface **149** and bottom surface **150**.

The set screw **108** has a threaded shaft **170** sized and shaped to be threadably received in the body threaded bore **161**. The set screw **170** has sufficient length to extend through and outward from the bottom surface **150**. In the second embodiment the set screw **108** has a head **171** that is gripable by a tool for rotation and torquing.

A tool **180** is provided for installing and removing the closure **106** form the bone screw head **113**. The tool **180** is T-shaped having a shank **181** with a handle **182** attached to one end and a generally flat surface **184** at an opposite end. The surface **184** has four pegs or posts **186** extending therefrom. The posts **186** extend form the surface **184** parallel to an axis of rotation of the tool **180** which is the same in use as the axis of rotation B of the closure. The posts **186** are aligned, sized and shaped to mate with the closure body bores **151**, **152**, **153** and **154**.

The tool shank **170** also includes an axial bore extending therethrough and receiving a keeper rod **190**. The rod **190** has a threaded tip **191** that is adapted to be received in the closure body bore **161** and a grasping head **192** at an opposite end.

In use the rod **107** is placed in the head **112** and the tool **180** is mated with the closure **106** in the manner shown in FIG. **10**, so that the four posts **186** are located in respective bores **151**, **152**, **152** and **154** and the rod tip **191** is threaded into the threaded bore **161**. The closure **106** is then mated with the head **112** and threaded thereon by mating of the surface **140** with the arm surfaces **126** and **127** until the closure **106** is snug in the bone screw head **113**. Torque in a preselected amount is applied to the closure **106** to ensure it is tightly seated in the head **112**. In some instances, the closure **106** may just be used to capture the rod **107** and the set screw **108** is used to lock the rod **107** in place. In particular, the tool **180** may be removed and the set screw **108** is then placed in the bore **161** and advanced against the rod **107**. A preselected torque is applied to lock the rod **107** in a selected position in the head **112**.

It is foreseen that the set screw **108** may be of other types than the one illustrated. That is the set screw could have a break-off head in which case the overall implant **101** would have a comparatively low profile associated with only the top of the bone screw.

For removal, the installation process is reversed. That is the tool **180** is utilized to rotate the closure **106** counter-clockwise rather than the clockwise direction used for

inserting. Where a break off set screw is used, the set screw can be rotated with the body **135** of the closure **106** for removal.

Illustrated in FIGS. **14**, **15** and **16** is a third embodiment or second modified embodiment of a bone screw closure in accordance with the present invention and generally identified by the reference numeral **206**.

The closure **206** is in many ways similar to the closure **6** and reference is made to the disclosure for the closure **6** for additional detail.

In particular the closure **206** has a generally cylindrically shaped body **235** that has a radially outer threaded surface **240**. The closure **235** also has a break-off head **236** secured to a top or upper surface **249** of the body **235** by a neck **254** at a break-off location **256**. Positioned between the neck **254** and a periphery **248** of the body upper surface **249** are three bores **244**, **245** and **246** that extend parallel to a central axis of rotation identified by a reference numeral C.

The major difference between the present embodiment and the closure **6** shown in the first embodiment is that a body **235** thereof also includes a central or axial bore **260** extending from a bottom surface **250** upward through the body **235** to the level of an upper surface **249** of the body **235**. The bore **260** is threaded and covered by the neck **254** until the break-off head **236** breaks form the body **235** during installation by application of torque, as was described in the first embodiment. The bore **260** is thereafter exposed upwardly or at the upper surface **249** and adapted to receive a set screw **263** of the type used in the second embodiment or alternatively a break-off type, as shown, set screw having removal slots **264**. It is noted that the diameter of the neck **254** at the top surface **249** is larger than the diameter of the bore **260**.

It is to be understood that while certain forms of the present invention have been illustrated and described herein, it is not to be limited to the specific forms or arrangement of parts described and shown.

What is claimed and desired to be secured by Letters Patent is as follows:

1. An open-headed medical implant having:

a) a first element adapted to operably be joined to a bone or other implant;

b) an implant head secured to said first element and having a pair of upright spaced arms defining a channel therebetween; said arms each having facing interior threaded surfaces;

c) a plug for closing said channel between said arms; said plug comprising:

i) a body sized and shaped to be received between the arms of said head; said body having a radially outward surface that has a thread thereon that is sized and shaped to threadedly mate with the threaded arms of said head;

ii) said body having a top and a bottom; said top of said body having at least one bore therein sized and shaped to receive a tool and extending generally axially at least partially through said body from top to bottom thereof; and wherein:

iii) said bore is spaced from and positioned between both a central axis of said body and a periphery of said body.

2. The implant according to claim **1** wherein:

a) there are a pair of spaced bores extending into said body from the top surface thereof.

3. The implant according to claim **1** wherein:

a) said body is generally cylindrical in shape.

4. The implant according to claim **1** including:

a) a break-off head joined to said body by a neck; said neck being aligned with the central axis of said body.

5. The implant according to claim **4** wherein:

a) said body includes at least a pair of said bores in the top thereof; and

b) said neck is positioned between said bores.

6. The implant according to claim **4** wherein:

a) said break-off head has a tool gripable outer surface for operably rotating said closure during insertion into said implant head and said neck being sized and shaped such that said break-off head breaks from said body when a preselected torque is applied to said break-off head by such a gripping tool with a generally clean profile at said top surface.

7. The implant according to claim **4** wherein:

a) said body includes an axial extending bore from the bottom to near the top thereof; said axial bore being located beneath said neck and being accessible from the top of said body when said break-off head breaks away from said body.

8. The implant according to claim **7** wherein:

a) said axial bore is threaded.

9. The implant according to claim **1** wherein:

a) said closure includes an axial threaded bore passing entirely through said body from a top to a bottom thereof.

10. The implant according to claim **9** in combination with:

a) a threaded set screw sized and shaped to be received in said axial bore; said axial set screw being also sized and shaped to extend outward from said body bottom surface when said screw is fully installed therein.

11. The implant according to claim **1** wherein:

a) said body top surface has three spaced tool receiving bores located therein; each of said bores being located at a common radius from said body central axis and being spaced at 120° from adjacent tool receiving bores.

12. The implant according to claim **1** wherein:

a) said body top has four spaced tool receiving bores each being located at a common radius from said body central axis and being evenly spaced from adjacent tool receiving bores.

13. The implant according to claim **1** including:

a) a tool having a gripable handle and an engagement face; said face including a post extending parallel to an axis of rotation of said tool for each said body bore; each said post being sized, aligned and positional to simultaneously enter a respective bore so as to rotate and apply torque to said body when said tool is rotated about the axis thereof, whereby said tool is operable to at least remove said body from said implant head in which said body has been inserted.

* * * * *