IN THE UNITED STATES PATENT AND TRADEMARK OFFICE

Inventor(s): Jeremy J. Lemoine
Title: BONE SCREW INCLUDING A DUAL THREAD CLOSURE MEMBER
Attorney Docket No.: 4394.G10US2
Customer No.: 104326

PATENT APPLICATION TRANSMITTAL

Commissioner for Patents
P.O. Box 1450
Alexandria, VA 22313-1450

We are transmitting herewith the following attached items and information (as indicated with an "X"):

X **CONTINUATION under 37 CFR 1.53(b) of prior Patent Application No. 13/771,442 comprising:**
- X Specification (13 pgs, including claims numbered 1 through 1 and a 1 page Abstract).
- X Formal Drawings (9 sheets).
- X Application Data Sheet (6 pgs).

X Information Disclosure Statement (2 pgs), Form 1449 (2 pgs), and copies of cited references (5).
X Communication Concerning Prior and Copending Applications (1 pg).
X Copy of Petition for two-month extension and retention request for Serial No. 13/771,442, filed 02/20/2013 (1 pg)

The filing fee (NOT ENCLOSED) will be calculated as follows:

	No. Filed	No. Extra	Rate	Fee
TOTAL CLAIMS	1 - 20	0	x $80.00 =	$0.00
INDEPENDENT CLAIMS	1 - 3	0	x $420.00 =	$0.00
[]MULTIPLE DEPENDENT CLAIMS PRESENTED				$0.00
BASIC FEE				$280.00
SEARCH FEE				$600.00
EXAMINATION FEE				$720.00
LATE FEE – OATH OR DECLARATION SURCHARGE				$140.00
	No. of pages (75% for e-filing)	Extra sets of 50 pages	Rate	
APPLICATION SIZE FEE	(17 - 100) / 50	0	$400.00	$0.00
TOTAL				$1,740.00

THE FILING FEE WILL BE PAID UPON RECEIPT OF THE NOTICE TO FILE MISSING PARTS. If applicable, any papers or fees supplied herewith are considered to be timely filed pursuant to 37 C.F.R. § 1.7(a), the response period falling on a Federal Holiday, Saturday or Sunday being extended to the next succeeding business day.

SCHWEGMAN LUNDBERG & WOESSNER, P.A.
Customer Number: 104326

By: /Ryan N. Kelley/
Ryan N. Kelley
Reg. No. 59,029

Date of Deposit: January 4, 2017
This paper or fee is being filed on the date indicated above using the USPTO's electronic filing system EFS-Web, and is addressed to The Commissioner for Patents, P.O. Box 1450, Alexandria, VA 22313-1450.

Modified PTO/AIA/14 (12-13)
Approved for use through 04/30/2017. OMB 0651-0032
U.S. Patent and Trademark Office; U.S. DEPARTMENT OF COMMERCE
Under the Paperwork Reduction Act of 1995, no persons are required to respond to a collection of information unless it contains a valid OMB control number.

Application Data Sheet 37 CFR 1.76	Attorney Docket Number	4394.G10US2
	Application Number	Unknown
Title of Invention	BONE SCREW INCLUDING A DUAL THREAD CLOSURE MEMBER	

The application data sheet is part of the provisional or nonprovisional application for which it is being submitted. The following form contains the bibliographic data arranged in a format specified by the United States Patent and Trademark Office as outlined in 37 CFR 1.76.
This document may be completed electronically and submitted to the Office in electronic format using the Electronic Filing System (EFS) or the document may be printed and included in a paper filed application.

Secrecy Order 37 CFR 5.2:

☐ **Portions or all of the application associated with this Application Data Sheet may fall under a Secrecy Order pursuant to 37 CFR 5.2 (Paper filers only. Applications that fall under Secrecy Order may not be filed electronically.)**

Inventor Information:

Inventor 1: Jeremy J. Lemoine

Legal Name

Prefix	Given Name	Middle Name	Family Name	Suffix
	Jeremy	J.	Lemoine	

Residence Information (Select One) ☒ US Residency ☐ Non US Residency ☐ Active US Military Service

City	Leander	State/Province	Texas	Country of Residence	United States of America

Mailing Address of Inventor:

Address 1	2100 August Jake Drive		
Address 2			
City	Leander	State/Province	Texas
Postal Code	78641	Country	United States of America

Correspondence Information:

Enter either Customer Number or complete the Correspondence Information section below.
For further information see 37 CFR 1.33(a).

☐ **An Address is being provided for the correspondence Information of this application.**

Customer Number	104326
Email Address	request@slwip.com

Application Information:

Title of the Invention	BONE SCREW INCLUDING A DUAL THREAD CLOSURE MEMBER		
Attorney Docket Number	4394.G10US2	Small Entity Status Claimed	☐
Application Type	Non-Provisional		
Subject Matter	Utility		
Suggested Class (if any)		Sub Class (if any)	
Suggested Technology Center (if any)			
Total Number of Drawing Sheets (if any)	9	Suggested Figure for Publication (if any)	

Under the Paperwork Reduction Act of 1995, no persons are required to respond to a collection of information unless it contains a valid OMB control number.

Application Data Sheet 37 CFR 1.76	Attorney Docket Number	4394.G10US2
	Application Number	Unknown
Title of Invention	BONE SCREW INCLUDING A DUAL THREAD CLOSURE MEMBER	

The application data sheet is part of the provisional or nonprovisional application for which it is being submitted. The following form contains the bibliographic data arranged in a format specified by the United States Patent and Trademark Office as outlined in 37 CFR 1.76.
This document may be completed electronically and submitted to the Office in electronic format using the Electronic Filing System (EFS) or the document may be printed and included in a paper filed application.

Filing By Reference:

Only complete this section when filing an application by reference under 35 U.S.C. 111(c) and 37 CFR 1.57(a). Do not complete this section if application papers including a specification and any drawings are being filed. Any domestic benefit or foreign priority information must be provided in the appropriate section(s) below (i.e., "Domestic Benefit/National Stage Information" and "Foreign Priority Information").

For the purposes of a filing date under 37 CFR 1.53(b), the description and any drawings of the present application are replaced by this reference to the previously filed application, subject to conditions and requirements of 37 CFR 1.57(a).

Application number of the previously filed application	Filing date (YYYY-MM-DD)	Intellectual Property Authority or Country Publication

Publication Information:

☐ **Request Early Publication (Fee required at time of Request 37 CFR 1.219)**

☐ **Request Not to Publish. I hereby request that the attached application not be published under 35 U.S. C. 122(b) and certify that the invention disclosed in the attached application has not and will not be the subject of an application filed in another country, or under a multilateral international agreement, that requires publication at eighteen months after filing.**

Representative Information:

Representative information should be provided for all practitioners having a power of attorney in the application. Providing this information in the Application Data Sheet does not constitute a power of attorney in the application (see 37 CFR 1.32). Entereither Customer Number or complete the Representative Name section below. If bothsections are completed the Customer Number will be used for the Representative Information during processing.

Please Select One:	☒ Customer	☐ US Patent Practitioner	☐ Limited Recognition (37 CFR 11.9)
Customer Number	104326		

Domestic Benefit/National Stage Information:

This section allows for the applicant to either claim benefit under 35 U.S.C. 119(e), 120, 121, or 365(c) or indicate National Stage entry from a PCT application. Providing this information in the application data sheet constitutes the specific reference required by 35 U.S.C. 119(e) or 120, and 37 CFR 1.78(a)(2) or CFR 1.78(a)(4), and need not otherwise be made part of the specification.

Prior Application Status	Pending		
Application Number	**Continuity Type**	**Prior Application Number**	**Filing or 371(c) Date (YYYY-MM-DD)**
This application	continuation of	13/771,442	2013-02-20
Prior Application Status	Expired		
Application Number	**Continuity Type**	**Prior Application Number**	**Filing or 371(c) Date (YYYY-MM-DD)**
13/771,442	Claims benefit of provisional	61/601,809	2012-02-22

Under the Paperwork Reduction Act of 1995, no persons are required to respond to a collection of information unless it contains a valid OMB control number.

Application Data Sheet 37 CFR 1.76	Attorney Docket Number	4394.G10US2
	Application Number	Unknown
Title of Invention	BONE SCREW INCLUDING A DUAL THREAD CLOSURE MEMBER	

The application data sheet is part of the provisional or nonprovisional application for which it is being submitted. The following form contains the bibliographic data arranged in a format specified by the United States Patent and Trademark Office as outlined in 37 CFR 1.76.
This document may be completed electronically and submitted to the Office in electronic format using the Electronic Filing System (EFS) or the document may be printed and included in a paper filed application.

Foreign Priority Information:

This section allows for the applicant to claim priority to a foreign application. Providing this information in the application data sheet constitutes the claim for priority as required by 35 U.S.C. 119(b) and 37 CFR 1.55(d). When priority is claimed to a foreign application that is eligible for retrieval under the priority document exchange program (PDX)i the information will be used by the Office to automatically attempt retrieval pursuant to 37 CFR 1.55(h)(1) and (2). Under the POX program, applicant bears the ultimate responsibility for ensuring that a copy of the foreign application is received by the Office from the participating foreign intellectual property office, or a certified copy of the foreign priority application is filed, within the time period specified in 37 CFR 1.55(g)(1).

Application Number	Country	Parent Filing Date (YYYY-MM-DD)	Access Code (if applicable)

Application Data Sheet 37 CFR 1.76	Attorney Docket Number	4394.G10US2
	Application Number	Unknown
Title of Invention	BONE SCREW INCLUDING A DUAL THREAD CLOSURE MEMBER	

The application data sheet is part of the provisional or nonprovisional application for which it is being submitted. The following form contains the bibliographic data arranged in a format specified by the United States Patent and Trademark Office as outlined in 37 CFR 1.76.
This document may be completed electronically and submitted to the Office in electronic format using the Electronic Filing System (EFS) or the document may be printed and included in a paper filed application.

Authorization or Opt-Out of Authorization to Permit Access:

When this Application Data Sheet is properly signed and filed with the application, applicant has provided written authority to permit a participating foreign intellectual property (IP) office access to the instant application-as-filed (see paragraph A in subsection 1 below) and the European Patent Office (EPO) access to any search results from the instant application (see paragraph B in subsection 1 below).

Should applicant choose not to provide an authorization identified in subsection 1 below, applicant must opt-out of the authorization by checking the corresponding box A or B or both in subsection 2 below.

NOTE: This section of the Application Data Sheet is ONLY reviewed and processed with the INITIAL filing of an application. After the initial filing of an application, an Application Data Sheet cannot be used to provide or rescind authorization for access by a foreign IP office(s). Instead, Form PTO/SB/39 or PTO/SB/69 must be used as appropriate.

1. Authorization to Permit Access by a Foreign Intellectual Property Office(s)

A. Priority Document Exchange (PDX) - Unless box A in subsection 2 (opt-out of authorization) is checked, the undersigned hereby grants the USPTO authority to provide the European Patent Office (EPO), the Japan Patent Office (JPO), the Korean Intellectual Property Office (KIPO), the State Intellectual Property Office of the People's Republic of China (SIPO), the World Intellectual Property Organization (WIPO), and any other foreign intellectual property office participating with the USPTO in a bilateral or multilateral priority document exchange agreement in which a foreign application claiming priority to the instant patent application is filed, access to: (1) the instant patent application-as-filed and its related bibliographic data, (2) any foreign or domestic application to which priority or benefit is claimed by the instant application and its related bibliographic data, and (3) the date of filing of this Authorization. See 37 CFR 1.14(h)(1).

B. Search Results from U.S. Application to EPO - Unless box B in subsection 2 (opt-out of authorization) is checked, the undersigned hereby grants the USPTO authority to provide the EPO access to the bibliographic data and search results from the instant patent application when a European patent application claiming priority to the instant patent application is filed. See 37 CFR 1.14(h)(2).

The applicant is reminded that the EPO's Rule 141(1) EPC (European Patent Convention) requires applicants to submit a copy of search results from the instant application without delay in a European patent application that claims priority to the instant application.

2. Opt-Out of Authorizations to Permit Access by a Foreign Intellectual Property Office(s)

☐ **A. Applicant DOES NOT authorize the USPTO to permit a participating foreign IP office access to the instant application-as-filed. If this box is checked, the USPTO will not be providing a participating foreign IP office with any documents and information identified in subsection 1A above.**

☐ **B. Applicant DOES NOT authorize the USPTO to transmit to the EPO any search results from the instant patent application. If this box is checked, the USPTO will not be providing the EPO with search results from the instant application.**

NOTE: Once the application has published or is otherwise publicly available, the USPTO may provide access to the application in accordance with 37 CFR 1.14.

Under the Paperwork Reduction Act of 1995, no persons are required to respond to a collection of information unless it contains a valid OMB control number.

Application Data Sheet 37 CFR 1.76	Attorney Docket Number	4394.G10US2
	Application Number	Unknown
Title of Invention	BONE SCREW INCLUDING A DUAL THREAD CLOSURE MEMBER	

The application data sheet is part of the provisional or nonprovisional application for which it is being submitted. The following form contains the bibliographic data arranged in a format specified by the United States Patent and Trademark Office as outlined in 37 CFR 1.76.
This document may be completed electronically and submitted to the Office in electronic format using the Electronic Filing System (EFS) or the document may be printed and included in a paper filed application.

Applicant Information:

Providing assignment information in this section does not substitute for compliance with any requirement of part 3 of Title 37 of CFR to have an assignment recorded by the Office.

Applicant: Zimmer Spine, Inc.

If the applicant is the inventor (or the remaining joint inventor or inventors under 37 CFR 1.45), this section should not be completed. The information to be provided in this section is the name and address of the legal representative who is the applicant under 37 CFR 1.43; or the name and address of the assignee, person to whom the inventor is under an obligation to assign the invention, or person who otherwise shows sufficient proprietary interest in the matter who is the applicant under 37 CFR 1.46. If the applicant is an applicant under 37 CFR 1.46 (assignee, person to whom the inventor is obligated to assign, or person who otherwise shows sufficient proprietary interest) together with one or more joint inventors, then the joint inventor or inventors who are also the applicant should be identified in this section.

☒ Assignee	☐ Legal Representative under 35 U.S.C. 117	☐ Joint Inventor
☐ Person to whom the inventor is obligated to assign	☐ Person who shows sufficient proprietary interest	

If applicant is the legal representative, indicate the authority to file the patent application, the inventor is:

☐ Deceased	☐ Legally incapacitated

Name of the Deceased or Legally Incapacitated Inventor :

If the Applicant is an Organization check here: ☒

Organization Name: Zimmer Spine, Inc.

Prefix	Given Name	Middle Name	Family Name	Suffix

Mailing Address Information:

Address 1	7375 Bush Lake Road		
Address 2			
City	Edina	State/Province	MN
Country	United States of America	Postal Code	55439
Phone Number			
Email Address			

Application Data Sheet 37 CFR 1.76	Attorney Docket Number	4394.G10US2
	Application Number	Unknown
Title of Invention	BONE SCREW INCLUDING A DUAL THREAD CLOSURE MEMBER	

The application data sheet is part of the provisional or nonprovisional application for which it is being submitted. The following form contains the bibliographic data arranged in a format specified by the United States Patent and Trademark Office as outlined in 37 CFR 1.76.
This document may be completed electronically and submitted to the Office in electronic format using the Electronic Filing System (EFS) or the document may be printed and included in a paper filed application.

Assignee Information including Non-Applicant Assignee Information:

Providing assignment information in this section does not substitute for compliance with any requirement of part 3 of Title 37 of CFR to have an assignment recorded by the Office.

Complete this section if assignee information, including non-applicant assignee information, is desired to be included on the patent application publication. An assignee-applicant identified in the "Applicant Information" section will appear on the patent application publication as an applicant. For an assignee-applicant, complete this section only if identification as an assignee is also desired on the patent application publication.

If the Assignee or Non-Applicant Assignee is an Organization check here. ☐

Prefix	Given Name	Middle Name	Family Name	Suffix

Mailing Address Information For Assignee including Non-Applicant Assignee:

Address 1			
Address 2			
City		State/Province	
Country		Postal Code	
Phone Number		Fax Number	
Email Address			

Signature:

NOTE: This Application Data Sheet must be signed in accordance with 37 CFR 1.33(b). **However, if this Application Data Sheet is submitted with the INITIAL filing of the application and either box A or B is not checked in subsection 2 of the "Authorization or Opt-Out of Authorization to Permit Access" section, then this form must also be signed in accordance with 37 CFR 1.14(c).**

This Application Data Sheet **must** be signed by a patent practitioner if one or more of the applicants is **a juristic entity** (e.g., corporation or association). If the applicant is two or more joint inventors, this form must be signed by a patent practitioner, **all** joint inventors who are the applicant, or one or more joint inventor-applicants who have been given power of attorney (e.g., see USPTO Form PTO/AIA/81) on behalf of **all** joint inventor-applicants.

See 37 CFR 1.4(d) for the manner of making signatures and certifications.

Signature	/Ryan N. Kelley/			Date (YYYY-MM-DD)	2017-01-04
First Name	Ryan	Last Name	Kelley	Registration Number	59,029

This collection of information is required by 37 CFR 1.76. The information is required to obtain or retain a benefit by the public which is to file (and by the USPTO to process) an application. Confidentiality is governed by 35 U.S.C. 122 and 37 CFR 1.14. This collection is estimated to take 23 minutes to complete, including gathering, preparing, and submitting the completed application data sheet form to the USPTO. Time will vary depending upon the individual case. Any comments on the amount of time you require to complete this form and/or suggestions for reducing this burden, should be sent to the Chief Information Officer, U.S. Patent and Trademark Office, U.S. Department of Commerce, P.O. Box 1450, Alexandria, VA 22313-1450. DO NOT SEND FEES OR COMPLETED FORMS TO THIS ADDRESS. **SEND TO: Commissioner for Patents, P.O. Box 1450, Alexandria, VA 22313-14**

BONE SCREW INCLUDING A DUAL THREAD CLOSURE MEMBER

CROSS-REFERENCE TO RELATED APPLICATIONS

This application claims the benefit of U.S. Provisional Application No. 61/601,809, filed on February 22, 2012, the entire disclosure of which is incorporated herein by reference.

TECHNICAL FIELD

The disclosure is directed to a vertebral anchor including a threaded closure member having a dual threaded portion. More particularly, the disclosure is directed to a bone screw including a threaded closure member having first and second intertwined threads threadably engageable with a threaded opening of the housing of the bone screw having first and second intertwined discontinuous threads.

BACKGROUND

The spinal column of a patient includes a plurality of vertebrae linked to one another by facet joints and an intervertebral disc located between adjacent vertebrae. The facet joints and intervertebral disc allow one vertebra to move relative to an adjacent vertebra, providing the spinal column a range of motion. Diseased, degenerated, damaged, or otherwise impaired facet joints and/or intervertebral discs may cause the patient to experience pain or discomfort and/or loss of motion, thus prompting surgery to alleviate the pain and/or restore motion of the spinal column.

One possible method of treating these conditions is to immobilize a portion of the spine to allow treatment. Traditionally, immobilization has been accomplished by rigid or dynamic stabilization. For example, in a conventional spinal fusion procedure, a surgeon restores the alignment of the spine or the disc space between vertebrae by installing a rigid or dynamic fixation rod or spacer between pedicle screws, or other vertebral anchors secured to adjacent vertebrae. Bone graft is placed between the vertebrae or along the posterior spinal elements, and the fixation rod or spacer cooperates with the screws to immobilize the two vertebrae relative to each other so that the bone graft may fuse with the vertebrae.

Zimvie_Zimmer Biomet v. Jackson
IPR2023-01430; Petitioners' EX1032
Page 8 of 74

Accordingly, it is desirable to provide alternative designs and constructions of vertebral anchors, such as bone screws, for securing stabilization systems to a vertebral segment of a spinal column during a medical procedure.

SUMMARY

The disclosure is directed to several alternative designs, materials and methods of manufacturing medical device structures and assemblies, and uses thereof.

Accordingly, one illustrative embodiment is a vertebral fastener including a housing with a bone engaging portion extending therefrom, and a closure member configured to threadably engage the housing. The housing includes a first leg and a second leg extending from a base portion of the housing and defining a channel between the first leg and the second leg for receiving a connecting member therethrough. The closure member is configured to threadably engage the first and second legs of the housing. The closure member includes a first thread and a second thread intertwined with the first thread. The first thread has a start proximate a lower surface of the closure member and the second thread has a start proximate the lower surface of the closure member.

Another illustrative embodiment is a bone screw including a housing, a threaded shaft, and a threaded closure member. The housing includes a base portion and first and second legs extending from the base portion. The first and second legs define a threaded opening extending into the housing from an upper extent of the housing. The housing also includes a channel intersecting the threaded opening for receiving a connecting member therethrough. The threaded shaft extends from the housing for threadably engaging a bony structure. The threaded closure member is configured to be threaded into the threaded opening of the housing between the first and second legs to secure a connecting member in the channel. The threaded closure member includes a first thread and a second thread intertwined with the first thread, and the threaded opening includes a first discontinuous thread and a second discontinuous thread intertwined with the first discontinuous thread.

Yet another illustrative embodiment is a method of securing a connecting member within a channel of a vertebral fastener. The method includes inserting a connecting

Zimvie_Zimmer Biomet v. Jackson
IPR2023-01430; Petitioners' EX1032
Page 9 of 74

member within a channel of a housing of a vertebral fastener between a first leg and a second leg of the housing. A closure member is then threadably engaged within a threaded opening of the housing between the first leg and the second leg of the housing. The closure member includes a first thread and a second thread intertwined with the first thread. The first thread has a start proximate a lower surface of the closure member and the second thread has a start proximate the lower surface of the closure member. In some instances, the start of the first thread of the closure member threadably initiates threaded engagement with the first leg of the housing substantially simultaneously as the start of the second thread initiates threaded engagement with the second leg of the housing.

The above summary of some example embodiments is not intended to describe each disclosed embodiment or every implementation of the aspects of the disclosure.

BRIEF DESCRIPTION OF THE DRAWINGS

The aspects of the disclosure may be more completely understood in consideration of the following detailed description of various embodiments in connection with the accompanying drawings, in which:

FIG. 1 is a perspective view of an exemplary vertebral anchor, shown as a bone screw;

FIG. 2 is a cross-sectional view of the bone screw of FIG. 1;

FIGS. 3 and 4 are perspective views of an exemplary closure member of the vertebral anchor of FIG. 1;

FIG. 5 is a bottom view of the closure member of the vertebral anchor of FIG. 1;

FIGS. 6A and 6B are perspective views of an exemplary housing of the vertebral anchor of FIG. 1;

FIG. 7 is a top view of the housing of the vertebral anchor of FIG. 1; and

FIG. 8 is a cross-sectional view of the closure member and the housing of the vertebral anchor of FIG. 1.

While the aspects of the disclosure are amenable to various modifications and alternative forms, specifics thereof have been shown by way of example in the drawings and will be described in detail. It should be understood, however, that the intention is not to limit aspects of the disclosure to the particular embodiments described. On the

contrary, the intention is to cover all modifications, equivalents, and alternatives falling within the spirit and scope of the disclosure.

DETAILED DESCRIPTION

For the following defined terms, these definitions shall be applied, unless a different definition is given in the claims or elsewhere in this specification.

All numeric values are herein assumed to be modified by the term "about", whether or not explicitly indicated. The term "about" generally refers to a range of numbers that one of skill in the art would consider equivalent to the recited value (i.e., having the same function or result). In many instances, the term "about" may be indicative as including numbers that are rounded to the nearest significant figure.

The recitation of numerical ranges by endpoints includes all numbers within that range (e.g., 1 to 5 includes 1, 1.5, 2, 2.75, 3, 3.80, 4, and 5).

Although some suitable dimensions, ranges and/or values pertaining to various components, features and/or specifications are disclosed, one of skill in the art, incited by the present disclosure, would understand desired dimensions, ranges and/or values may deviate from those expressly disclosed.

As used in this specification and the appended claims, the singular forms "a", "an", and "the" include plural referents unless the content clearly dictates otherwise. As used in this specification and the appended claims, the term "or" is generally employed in its sense including "and/or" unless the content clearly dictates otherwise.

As used herein, the term "thread" refers to a projecting rib extending helically along a member.

As used herein, the term "external thread" refers to a thread extending radially outward on an outside of a member.

As used herein, the term "internal thread" refers to a thread extending radially inward on an inside of a member.

As used herein, the term "major diameter" refers to the largest diameter of an external or internal thread.

As used herein, the term "minor diameter" refers to the smallest diameter of an external or internal thread.

As used herein, the term "crest" refers to the surface of a thread corresponding to the major diameter of an external thread or the minor diameter of an internal thread.

As used herein, the term "root" refers to the surface of a thread corresponding to the minor diameter of an external thread or the major diameter of an internal thread.

As used herein the term "flank" refers to a surface of a thread connecting the crest and the root.

As used herein, the term "thread start" or "start" refers to the point where a thread begins.

As used herein, the term "lead" refers to the axial distance between adjacent crests of a thread during one complete revolution (360°) of the thread.

As used herein, the term "pitch" refers to the axial distance between adjacent crests along a thread portion of a member. In a threaded member including a single helical thread, the lead and the pitch are equal. In a threaded member including multiple intertwined threads, the lead is equal to the pitch multiplied by the number of threads.

The following detailed description should be read with reference to the drawings in which similar elements in different drawings are numbered the same. The detailed description and the drawings, which are not necessarily to scale, depict illustrative embodiments and are not intended to limit the scope of the disclosure. The illustrative embodiments depicted are intended only as exemplary. Selected features of any illustrative embodiment may be incorporated into an additional embodiment unless clearly stated to the contrary.

An exemplary vertebral anchor 10 is illustrated at FIG. 1. Although the vertebral anchor 10 is depicted as a threaded vertebral fastener (e.g., pedicle screw, bone screw), in some embodiments the vertebral anchor 10 may be a vertebral hook (e.g., laminar hook) or another type of fastening member for attachment to a bony structure such as a vertebra of the spinal column.

The vertebral anchor 10, shown as a bone screw 12, may include a housing 14 and a bone engagement portion 16 extending from the housing 14. In some embodiments, the bone engagement portion 16 may be a shaft 18 of the bone screw 12 extending from the housing 14 along a longitudinal axis of the bone screw 12. In embodiments in which the vertebral anchor 10 is a vertebral hook, the bone engagement portion 16 could be

configured as a hook to be secured to a bony structure, for example. In some embodiments, the bone screw 12 may be a monoaxial screw in which the housing 14 is stationary relative to the shaft 18, and in other embodiments the bone screw 12 may be a polyaxial screw in which the housing 14 is actuatable (e.g., pivotable, rotatable) relative to the shaft 18. In some embodiments, the shaft 18 may be configured to be installed into a bony region of a vertebra of the spinal column. For example, the shaft 18 may be installed into a pedicle of a vertebra, or other region of a vertebra.

In some embodiments, the shaft 18 may be a threaded region having helical threads configured to be screwed into a pedicle of a vertebra, or other bony region of a vertebra. In some embodiments, the shaft 18 may include a single thread, which may have a constant pitch or a variable pitch extending along the shaft 18. In other embodiments, the shaft 18 may include a plurality of threads extending helically around the shaft 18. For example, in some instances, the shaft 18 may include a first, distal region 40 having a first thread 36 forming a single threading, and a second, proximal region 42 including the first thread 36 and a second thread 38 forming a dual threading. The first thread 36 may include a start proximate the distal tip of the shaft 18 and may extend proximally along the distal region 40 and the proximal region 42 of the shaft 18. The second thread 38, which may include a start beginning at the transition between the distal region 40 and the proximal region 42, may extend proximally along the proximal region 42 and be located between adjacent windings of the first thread 36 throughout the proximal region 42. In other embodiments, the shaft 18 may have a different threaded configuration, if desired.

The housing 14 may include a base portion 24, from which the shaft portion 18 extends from, and first and second legs 26a, 26b extending from the base portion 24 on opposing sides of the housing 14. The first and second legs 26a, 26b may define an opening 28, which may be a threaded opening, extending into the housing 14 from an upper extent of the housing 14 opposite the base portion 24. Each of the first and second legs 26a, 26b may include a threaded portion for threadably engaging a threaded portion of a securing member 20, as described further herein. The housing 14 may additionally include a channel 30, such as a U-shaped channel, defined between the first and second legs 26a, 26b. The channel 30 may extend through the housing 14 from a first side 32 of

the housing 14 to a second side 34 of the housing 14. The threaded opening 28 may intersect the channel 30. The channel 30 may be configured to receive a longitudinal connecting member of a vertebral stabilization system, such as a spinal rod, extending therethrough.

The bone screw 12 may include a securing member or closure member 20 configured to engage the housing 14 to secure a stabilizing member or connecting member (e.g., elongate rod or flexible cord) to the bone screw 12. The closure member 20 may be a threaded fastener, such as a set screw, having a threaded portion configured to threadably engage the threaded portions of the legs 26a, 26b of the housing 14. It is noted that in other embodiments, the legs 26a, 26b of the housing 14 may include external threaded portions configured to threadably engage a securing member 20 having an internal threaded portion. In such instances, the closure member 20 may be configured as a threaded nut, a threaded cap, or other internally threaded fastener, for example.

FIG. 2 is a cross-sectional view through the housing 14, further illustrating components of the bone screw 12. As shown in FIG. 2, in embodiments in which the bone screw 12 is a polyaxial screw, the base portion 24 may include a cavity, such as a spherical cavity, configured to pivotably receive the head 44, such as a spherically shaped head, of the shaft 18 therein. In some instances, the housing 14 may be configured such that the head 44 of the shaft 18 may be bottom loaded into the housing 14. In other words, the head 44 of the shaft 18 may be inserted into a cavity of the base portion 24 of the housing 14 through a lower opening 50 to assemble the shaft 18 to the housing 14. Once the head 44 is positioned in the cavity of the base portion 24, a retainer ring 52, such as a split ring, may be positioned in a groove formed in the base portion 24 to retain the head 44 in the cavity. In other embodiments, the housing 14 may be configured such that the head 44 of the shaft 18 is top loaded into the housing 14. In other words, the shaft 18 may be inserted through the housing 14 from the upper end such that the shaft 18 is passed out of the housing 14 through the lower opening 50 while the head 44 of the shaft 18 is retained in the cavity of the base portion 24 of the housing 14.

The bone screw 12 may also include an insert 46 positioned in the housing 14 configured to contact the head 44. In some instances, the insert 46 may include a

spherically concave recess configured to receive a portion of the spherical head 44 therein. A biasing member, such as a wave washer 48, may be positioned in the housing 14 to exert a force against the insert 46 in order to press the insert 46 against the head 44 of the shaft 18. Thus, the insert 46 may frictionally engage the head 44, such that frictional forces between the insert 46 and the head 44 resist movement of the shaft 18 relative to the housing 14 until a sufficient force is applied to overcome the frictional forces.

As noted above, the closure member 20 have a threaded portion configured to threadably engage the threaded portions of the legs 26a, 26b of the housing 14. As shown in FIG. 2, the threaded portion of the closure member 20 may be a dual threaded portion, including a first thread 60 and a second thread 62 intertwined with the first thread 60. Correspondingly, the threaded portions of the legs 26a, 26b of the housing 14 may be dual threaded portions including a first thread 70 and a second thread 72 intertwined with the first thread 70.

FIGS. 3 and 4 are perspective views further illustrating the closure member 20. The closure member 20 may include a driver engaging structure 54, such as an opening extending into or through the closure member 20 configured to receive and engage with a driver to rotate the closure member 20 into threaded engagement with the housing 14. The drive engaging structure 54 may have any desired configuration, such as a hex socket, a hexalobular socket (e.g., TORX® opening), or other desired engagement interface for receiving a driver to rotatably advance the closure member 20.

The first thread 60 may include a start 64a proximate the lower surface 58 of the closure member 20 and helically extend to the upper surface 56 of the closure member 20. Similarly, the second thread 62 may include a start 64b proximate the lower surface 58 of the closure member 20 and helically extend to the upper surface 56 of the closure member 20. The helical windings of the first thread 60 may alternate with helical windings of the second thread 62 from the lower surface 58 to the upper surface 56 of the closure member 20. As shown in FIG. 5, the start 64a of the first thread 60 may be oriented a desired angular displacement θ about the longitudinal axis of the closure member 20 from the start 64b of the second thread 62. For example, as shown in FIG. 5, the start 64a of the first thread 60 may be displaced 180° from the start 64b of the second

thread 62 about the longitudinal axis of the closure member 20. However, in other embodiments, the angular displacement θ between the start 64a of the first thread 60 and the start 64b of the second thread 62 may be another angular amount, if desired.

Turning to FIGS. 6A and 6B, the threaded portions of the first and second legs 26a, 26b of the housing 14 are further illustrated. The first thread 70 may include a start 74a proximate the upper extent of the first leg 26a of the housing 14 and helically extend along the opening 28. Similarly, the second thread 72 may include a start 74b proximate the upper extent of the second leg 26b and helically extend along the opening 28. The helical windings of the first thread 70 may alternate with helical windings of the second thread 72 along the opening 28 of the housing 14. In other words, each of the first and second legs 26a, 26b may including discontinuous portions of the first thread 70 alternating with discontinuous portions of the second thread 72 along an interior of the opening 28 of the housing 14. As shown in FIG. 7, the start 74a of the first thread 70 may be oriented a desired angular displacement θ about the longitudinal axis of the housing 14 from the start 74b of the second thread 72. For example, as shown in FIG. 7, the start 74a of the first thread 70 may be displaced 180° from the start 74b of the second thread 72 about the longitudinal axis of the housing 14. However, in other embodiments, the angular displacement θ between the start 74a of the first thread 70 and the start 74b of the second thread 72 may be another angular amount, if desired.

Referring to FIG. 8, it can be seen that the threaded portion of the closure member 20, and correspondingly, the threaded portions of the legs 26a, 26b of the housing 14 has a lead L (measured between crests of either the first thread 60, 70 or the second thread 62, 72) which is two times the pitch (measured between the crest of the first thread 60, 70 and the adjacent crest of the second thread 62, 72) of the threaded portion of the closure member 20 and the threaded portions of the legs 26a, 26b of the housing 14. Accordingly, when the closure member 20 is threadably engaged in the opening 28 of the housing 14, for every revolution (360°) of the closure member 20, the closure member 20 will be axially advanced into the housing 14 and against a connecting member positioned in the channel 30 twice as much as a closure member having a single thread having a lead equal to the pitch of the threading of the closure member.

When the closure member 20 is threadably engaged in the threaded opening 28 of the housing 14 between the first and second legs 26a, 26b, the upper flank 66a of the first thread 60 of the closure member 20 faces the lower flank 78b of the second thread 72 of the legs 26a, 26b, and the upper flank 66b of the second thread 62 of the closure member 20 faces the lower flank 78a of the first thread 70 of the legs 26a, 26b. Furthermore, the lower flank 68a of the first thread 60 of the closure member 20 faces the upper flank 76a of the first thread 70 of the legs 26a, 26b, and the lower flank 68b of the second thread 62 of the closure member 20 faces the upper flank 66b of the second thread 72 of the legs 26a, 26b. The threads 60, 62 of the exemplary closure member 20 shown in FIG. 8, and correspondingly the threads 70, 72 of the housing 14, have a reverse flank angle, meaning that both the upper flanks 66a, 66b and lower flanks 68a, 68b angle in the same direction from the central longitudinal axis. However, in other embodiments, the dual threads 60, 62 can have another threadform, if desired.

In order to secure a connecting member (e.g., elongate rod, elongate cord, spool, spindle, etc.) within the channel 30 of the housing 14, the closure member 20 may be threadably engaged in the threaded opening 28 between the legs 26a, 26b of the housing 20. The closure member 20 may be configured such that the start 64a of the first thread 60 of the closure member 20 threadably initiates threaded engagement with the first leg 26a of the housing 14 substantially simultaneously as the start 64b of the second thread 62 of the closure member 20 initiates threaded engagement with the second leg 26b of the housing 14. Thus, each of the first and second legs 26a, 26b of the housing 14 may be threadably engaged with the closure member 20 substantially simultaneously, or stated differently, the closure member 20 may initiate threaded engagement with each of the first and second legs 26a, 26b of the housing 14 substantially simultaneously. In other embodiments, the threads 60, 62 of the closure member 20 may be timed with the threads 70, 72 of the threaded opening 28 of the housing 14 such that the start 64a of the first thread 60 initiates threaded engagement with the first leg 26a of the housing 14 prior to the start 64b of the second thread 62 initiating threaded engagement with the second leg 26b of the housing 14, but before the start 64a of the first thread 60 initiates threaded engagement with the second leg 26b.

Furthermore, it can be seen that the closure member 20 will travel axially in the threaded opening 28 of the housing 14 twice as far per revolution (360°) as a conventional closure member having a single thread with the same thread pitch.

Those skilled in the art will recognize that aspects of the present disclosure may be manifested in a variety of forms other than the specific embodiments described and contemplated herein. Accordingly, departure in form and detail may be made without departing from the scope and spirit of the present disclosure as described in the appended claims.

What is claimed is:

1. A vertebral fastener comprising:

a housing and a bone engaging portion extending from the housing, the housing including a first leg and a second leg extending from a base portion of the housing and defining a channel between the first leg and the second leg for receiving a connecting member therethrough; and

a closure member configured to threadably engage the first and second legs of the housing;

wherein the closure member includes a first thread and a second thread intertwined with the first thread, the first thread having a start proximate a lower surface of the closure member and the second thread having a start proximate the lower surface of the closure member.

ABSTRACT OF THE DISCLOSURE

A bone screw including a housing including a threaded opening defined between first and second legs extending from a base portion of the housing, and a threaded closure member configured to be threaded into the threaded opening of the housing between the first and second legs to secure a connecting member in a channel of the housing. The threaded closure member includes a first thread and a second thread intertwined with the first thread, and the threaded opening includes a first discontinuous thread and a second discontinuous thread intertwined with the first discontinuous thread.

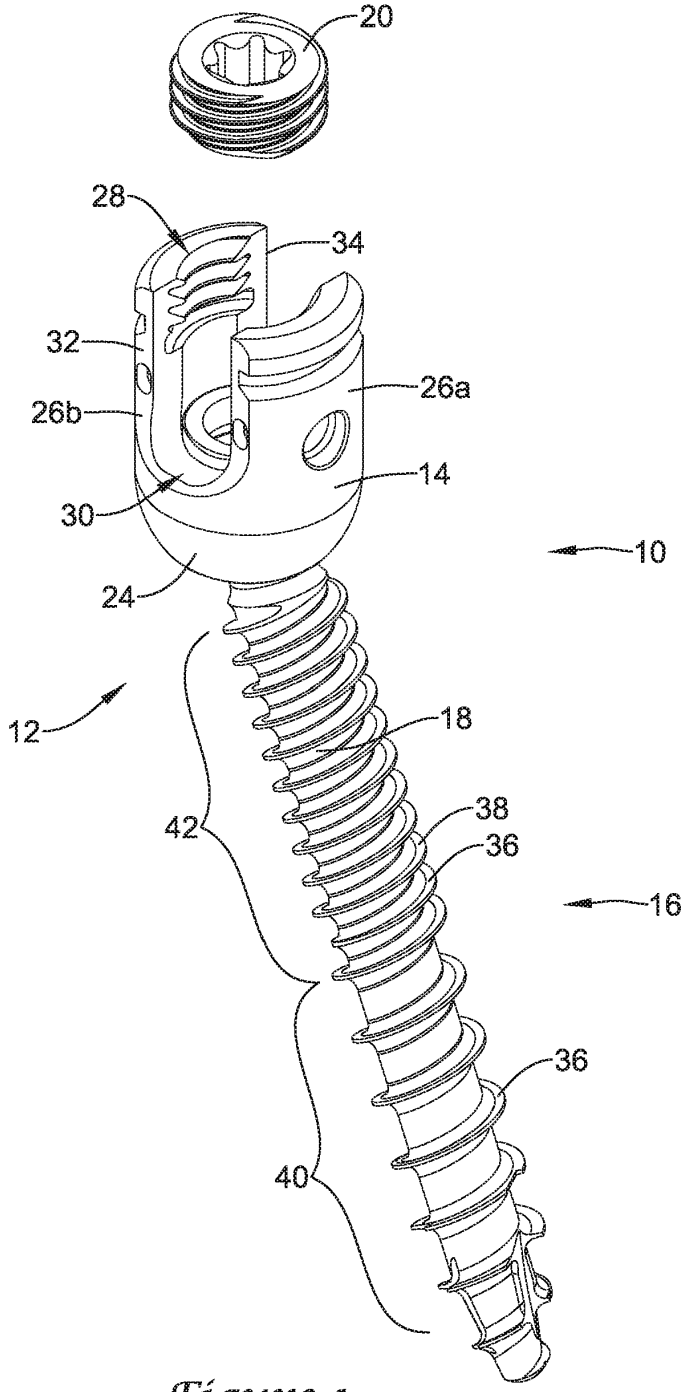

Figure 1

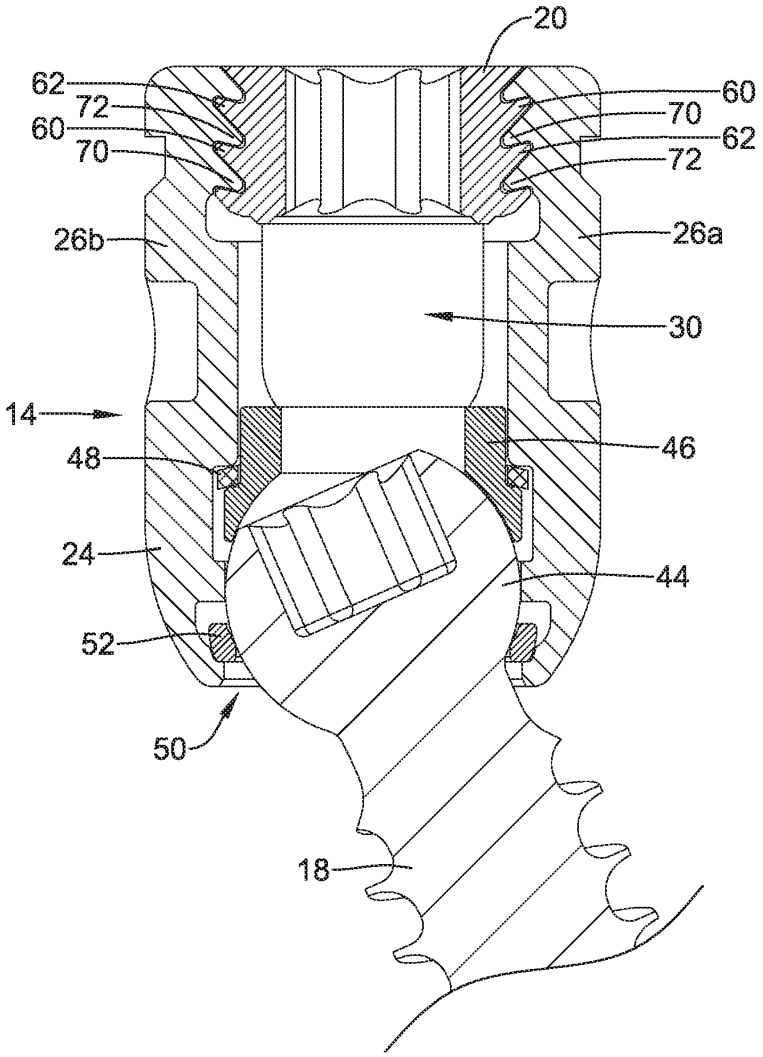

Figure 2

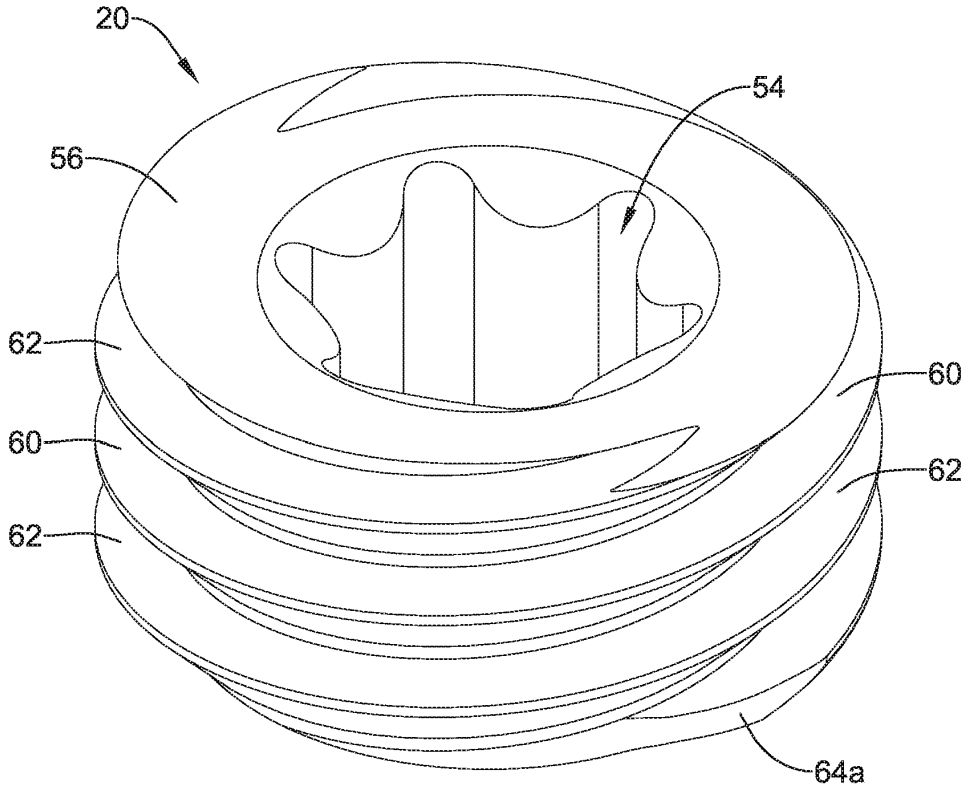

Figure 3

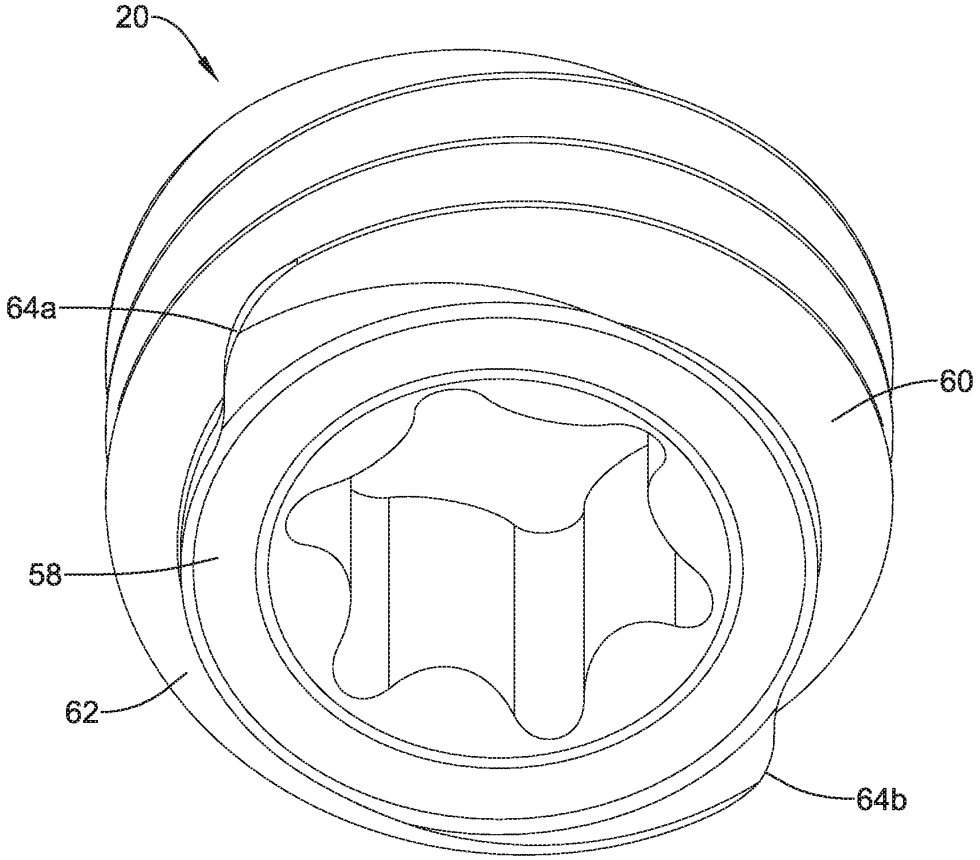

Figure 4

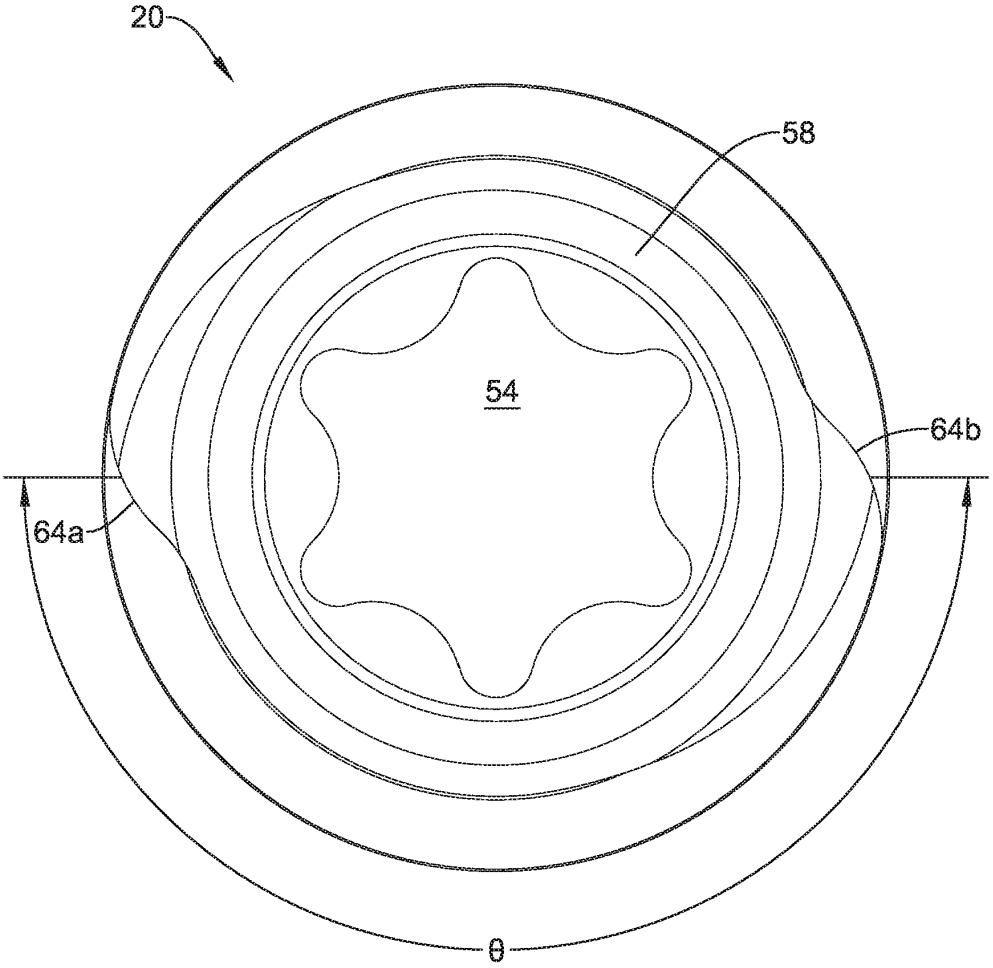

Figure 5

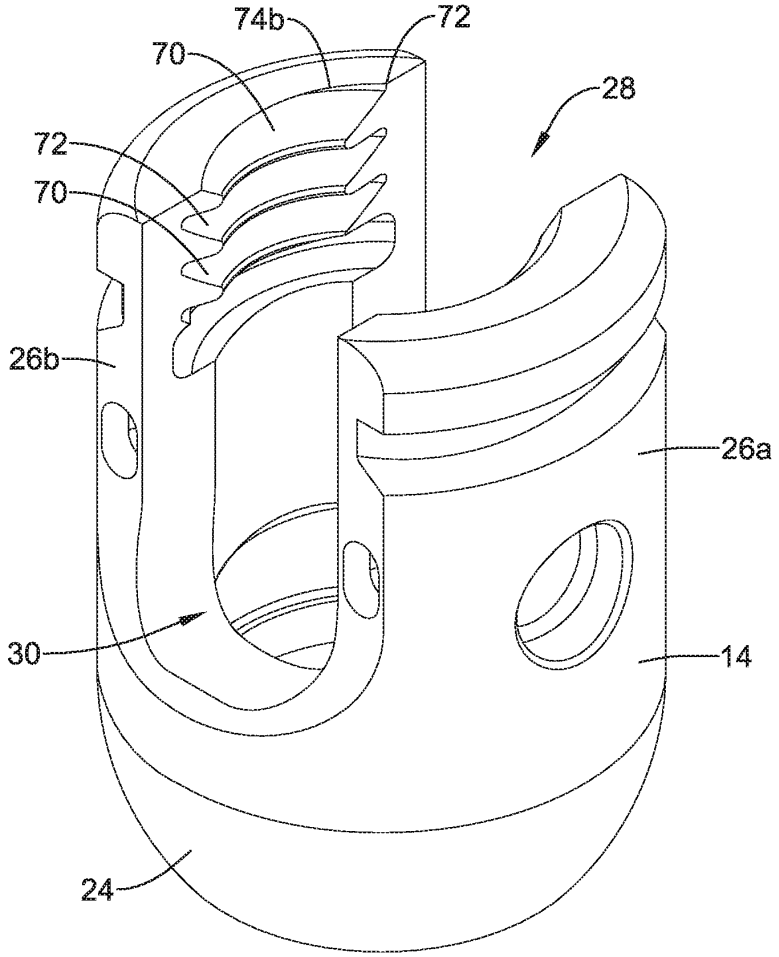

Figure 6A

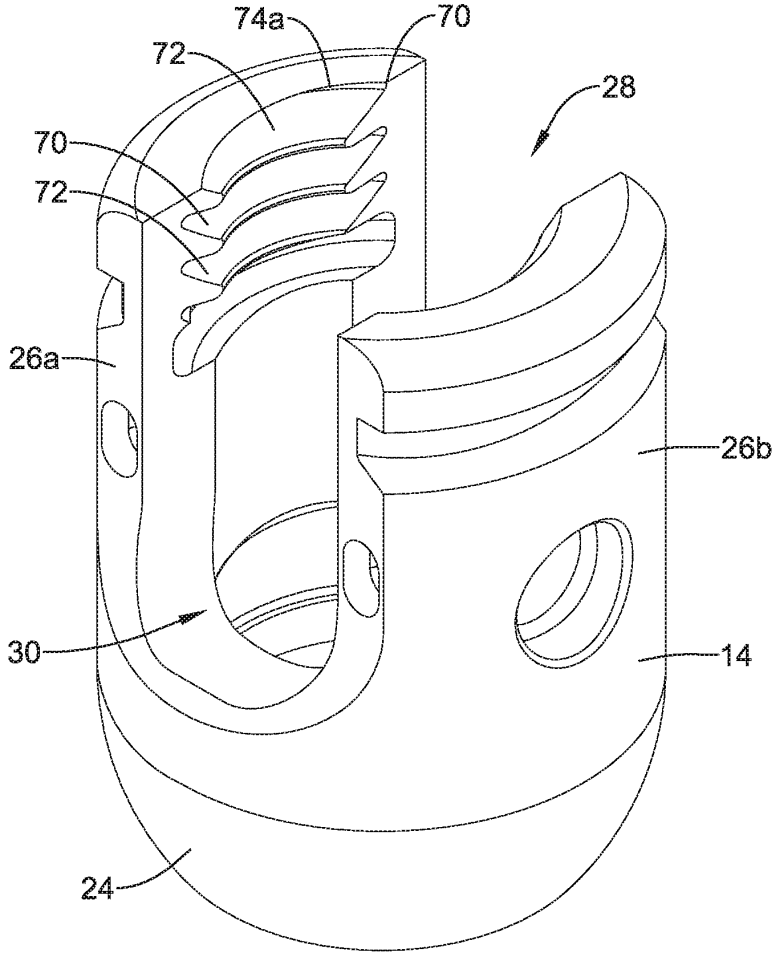

Figure 6B

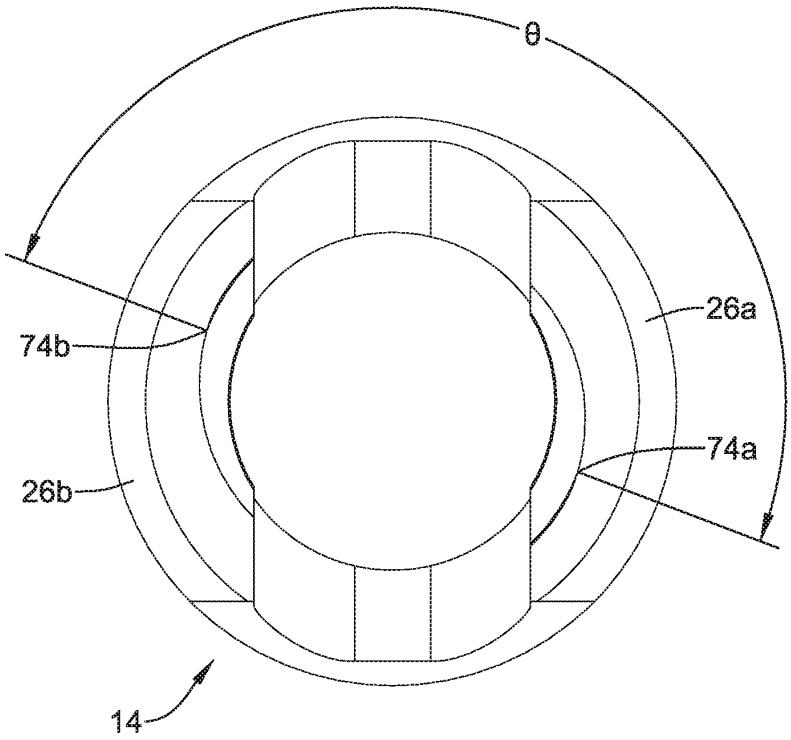

Figure 7

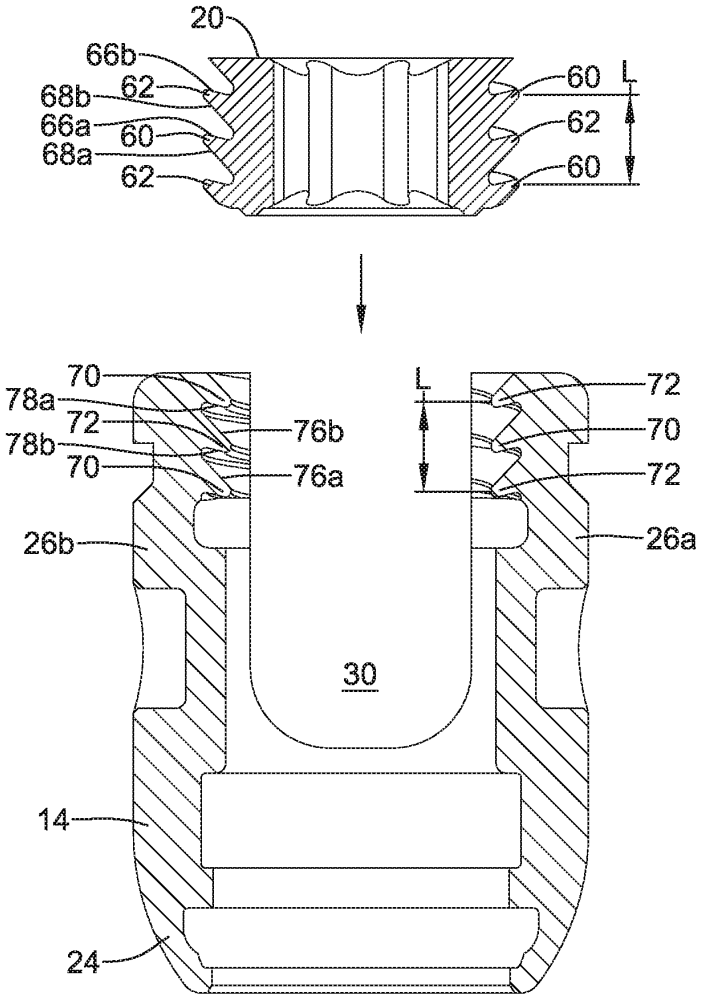
20
66b
62
68b
66a
60
68a
62
60
L
62
60
70
78a
72
78b
70
76b
76a
L
72
70
72
26b
26a
30
14
24

Figure 8

S/N Unknown **PATENT**

IN THE UNITED STATES PATENT AND TRADEMARK OFFICE

Inventor(s):	Jeremy J. Lemoine	Examiner:	Unknown
Serial No.:	Unknown	Group Art Unit:	Unknown
Filed:	Herewith	Docket:	4394.G10US2
Customer No.:	104326	Confirmation No.:	Unknown
Title:	BONE SCREW INCLUDING A DUAL THREAD CLOSURE MEMBER		

COMMUNICATION CONCERNING PRIOR OR COPENDING APPLICATION(S)

Commissioner for Patents
P.O. Box 1450
Alexandria, VA 22313-1450

Pursuant to the guidance of MPEP §§ 2001.06(b) and 2004(9), Applicant would like to bring the following additional application(s) to the Examiner's attention. The identification of these applications is not intended to suggest that the subject matter claimed in any listed application is, or has been, substantially similar to any claim or claims in the present application.

Serial No./ Patent No.	Filing Date	Attorney Docket	Title
13/771,442	February 20, 2013	4394.G10US1	BONE SCREW INCLUDING A DUAL THREAD CLOSURE MEMBER

Respectfully submitted,

SCHWEGMAN LUNDBERG & WOESSNER, P.A.
P.O. Box 2938
Minneapolis, MN 55402
(612) 373-6900

Date January 4, 2017 By /Ryan N. Kelley/

Ryan N. Kelley
Reg. No. 59,029

S/N Unknown **PATENT**

IN THE UNITED STATES PATENT AND TRADEMARK OFFICE

Inventor(s):	Jeremy J. Lemoine	Examiner:	Unknown
Serial No.:	Unknown	Group Art Unit:	Unknown
Filed:	Herewith	Docket:	4394.G10US2
Customer No.:	104326	Confirmation No.:	Unknown
Title:	BONE SCREW INCLUDING A DUAL THREAD CLOSURE MEMBER		

INFORMATION DISCLOSURE STATEMENT

Commissioner for Patents
P.O. Box 1450
Alexandria, VA 22313-1450

In compliance with the duty imposed by 37 C.F.R. § 1.56, and in accordance with 37 C.F.R. §§ 1.97 *et. seq.*, the enclosed materials are brought to the attention of the Examiner for consideration in connection with the above-identified patent application. Applicant respectfully requests that this Information Disclosure Statement be entered and the documents listed on the attached PTO 1449 Form be considered by the Examiner and made of record. Pursuant to the provisions of MPEP 609, Applicant requests that a copy of the PTO 1449 Form, initialed as being considered by the Examiner, be returned to the Applicant with the next official communication.

Pursuant to 37 C.F.R. § 1.97(b), it is believed that no fee or statement is required with the Information Disclosure Statement.

Pursuant to 37 C.F.R. § 1.98(a)(2), copies of cited U.S. Patents and Published Applications, and Non-Published Applications identifiable by USPTO Serial Number, are no longer required to be provided to the Office. Applicant acknowledges the requirement to submit copies of foreign patent documents and non-patent literature in accordance with 37 C.F.R § 1.98(a)(2).

The Examiner is invited to contact the undersigned at the telephone number indicated if there are any questions regarding this communication.

Respectfully submitted,

SCHWEGMAN LUNDBERG & WOESSNER, P.A.
P.O. Box 2938
Minneapolis, MN 55402
(612) 373-6900

Date January 4, 2017 By /Ryan N. Kelley/

Ryan N. Kelley
Reg. No. 59,029

RNK:rkm

Modified form PTO/SB/08A(04-07) OMB 651-0031
US Patent & Trademark Office: U.S. DEPARTMENT OF COMMERCE
Under the Paperwork Reduction Act of 1995, no persons are required to respond to a collection of information unless it contains a valid OMB control number.

Substitute for form 1449A/PTO **INFORMATION DISCLOSURE STATEMENT BY APPLICANT** (Use as many sheets as necessary)	*Complete if Known*	
	Application Number	Unknown
	Filing Date	Herewith
	First Named Inventor	Jeremy J. Lemoine
	Group Art Unit	Unknown
	Examiner Name	Unknown
Sheet 1 of 2	Attorney Docket No: 4394.G10US2	

US PATENT DOCUMENTS

Examiner Initial *	USP Document Number	Publication Date	Name of Patentee or Applicant of cited Document
	US-1,980,093	11/6/1934	Heyman, Rosenberg
	US-20070233122A1	10/4/2007	Denis, Francis
	US-20080294194A1	11/27/2008	Capote, Marco Dagoberto, et al.
	US-20130218213A1	8/22/2013	Lemoine, Jeremy J
	US-2,353,030	7/4/1944	Green, Emmet M
	US-5,520,688	5/28/1996	Lin, Chih-i
	US-6,063,090	5/16/2000	Schlapfer, Fridolin
	US-6,074,391	6/13/2000	Metz-stavenhagen, Peter, et al.
	US-6,296,642	10/2/2001	Morrison, Matthew M, et al.
	US-6,454,768	9/24/2002	Jackson, Roger P
	US-6,726,689	4/27/2004	Jackson, Roger P
	US-6,755,829	6/29/2004	Bono, Frank Scott, et al.
	US-7,018,378	3/28/2006	Biedermann, Lutz, et al.
	US-7,066,937B2	6/27/2006	Shluzas, Alan E
	US-7,625,394	12/1/2009	Molz IV, Fred J, et al.
	US-7,776,067	8/17/2010	Jackson, Roger P
	US-7,780,703	8/24/2010	Yuan, Hansen, et al.
	US-7,811,310	10/12/2010	Baker, Daniel R, et al.
	US-7,819,901	10/26/2010	Yuan, Hansen, et al.
	US-7,837,716	11/23/2010	Jackson, Roger P
	US-8,241,341	8/14/2012	Walker, John Lawrence, et al.
	US-8,257,398	9/4/2012	Jackson, Roger P
	US-8,273,109	9/25/2012	Jackson, Roger P
	US-8,282,673	10/9/2012	Jackson, Roger P
	US-8,308,773	11/13/2012	Jang, Jong Wuk
	US-8,313,516	11/20/2012	Konieczynski, David D, et al.
	US-8,337,530	12/25/2012	Hestad, Hugh D, et al.
	US-8,353,932	1/15/2013	Jackson, Roger P
	US-8,911,479	12/16/2014	Jackson, Roger P., et al.

FOREIGN PATENT DOCUMENTS

Examiner Initial *	Foreign Document Number	Publication Date	Name of Patentee or Applicant of cited Document	T 1

EXAMINER DATE CONSIDERED

* EXAMINER: Initial if reference considered, whether or not citation is in conformance with MPEP 609. Draw line through citation if not in conformance and not considered. Include copy of this form with next communication to applicant. 1 Applicant is to place a check mark here if English language Translation is attached

Substitute for form 1449A/PTO **INFORMATION DISCLOSURE STATEMENT BY APPLICANT** (Use as many sheets as necessary)	*Complete if Known*	
	Application Number	Unknown
	Filing Date	Herewith
	First Named Inventor	Jeremy J. Lemoine
	Group Art Unit	Unknown
	Examiner Name	Unknown
Sheet 2 of 2	Attorney Docket No: 4394.G10US2	

OTHER DOCUMENTS – NON PATENT LITERATURE DOCUMENTS		
Examiner Initial *	**Include name of the author (in CAPITAL LETTERS), title of the article (when appropriate), title of the item (book, magazine, journal, serial, symposium, catalog, etc.), date, page(s), volume-issue number(s), publisher, city and/or country where published.**	**T 1**
	"Application Serial No. 13/771,442, Final Office Action mailed 08-04-16", 12 pgs	
	"Application Serial No. 13/771,442, Non Final Office Action mailed 10-22-15", 10 pgs	
	"Application Serial No. 13/771,442, Response filed 04-19-16 to Non Final Office Action mailed 10-22-15", 9 pgs	
	"Application Serial No. 13/771,442, Response filed 09-29-15 to Restriction Requirement mailed 08-20-15", 7 pgs	
	"Application Serial No. 13/771,442, Restriction Requirement mailed 08-20-15", 6 pgs	

EXAMINER **DATE CONSIDERED**

* EXAMINER: Initial if reference considered, whether or not citation is in conformance with MPEP 609. Draw line through citation if not in conformance and not considered. Include copy of this form with next communication to applicant. 1 Applicant is to place a check mark here if English language Translation is attached

IN THE UNITED STATES PATENT AND TRADEMARK OFFICE

Inventor(s):	Jeremy J. Lemoine	Examiner:	Steven Cotroneo
Serial No.:	13/771,442	Group Art Unit:	3733
Filed:	February 20, 2013	Docket:	4394.G10US1
Customer No.:	104326	Confirmation No.:	8340
Title:	BONE SCREW INCLUDING A DUAL THREAD CLOSURE MEMBER		

PETITION FOR A TWO-MONTH EXTENSION OF TIME AND RETENTION REQUEST

Mail Stop AF
Commissioner for Patents
P.O. Box 1450
Alexandria, VA 22313-1450

In accordance with the provision of 37 C.F.R § 1.136(a), it is respectfully requested that a two-month extension of time be granted in which to respond to the Final Office Action mailed August 4, 2016, said period of response being extended from November 4, 2016 to January 4, 2017.

Applicant submits this Petition to maintain pendency of the instant application and to file a continuation application, claiming the benefit of priority of the instant application.

Please charge Deposit Account No. 19-0743 in the amount of $600.00 to cover the required extension fee. Please charge any additional fees or credit overpayment to deposit Account No. 19-0743.

Respectfully submitted,

SCHWEGMAN LUNDBERG & WOESSNER, P.A.
P.O. Box 2938
Minneapolis, MN 55402
(612) 373-6900

Date January 4, 2017 By /Ryan N. Kelley/

Ryan N. Kelley
Reg. No. 59,029

Electronic Acknowledgement Receipt

EFS ID:	27964822
Application Number:	15397959
International Application Number:	
Confirmation Number:	4957
Title of Invention:	BONE SCREW INCLUDING A DUAL THREAD CLOSURE MEMBER
First Named Inventor/Applicant Name:	Jeremy J. Lemoine
Customer Number:	104326
Filer:	Michael R. Mischnick/Robyn Miller
Filer Authorized By:	Michael R. Mischnick
Attorney Docket Number:	4394.G10US2
Receipt Date:	04-JAN-2017
Filing Date:	
Time Stamp:	12:50:27
Application Type:	Utility under 35 USC 111(a)

Payment information:

Submitted with Payment	no

File Listing:

Document Number	Document Description	File Name	File Size(Bytes)/ Message Digest	Multi Part /.zip	Pages (if appl.)
1		4394G10US2_CONAPPFORFILING.pdf	2349552 50bcfff02e198c5de0c8ed6b832916ea46bcdd6b	yes	35

	Multipart Description/PDF files in .zip description		
	Document Description	**Start**	**End**
	Transmittal of New Application	1	1
	Application Data Sheet	2	7
	Specification	8	18
	Claims	19	19
	Abstract	20	20
	Drawings-only black and white line drawings	21	29
	Miscellaneous Incoming Letter	30	30
	Miscellaneous Incoming Letter	31	32
	Information Disclosure Statement (IDS) Form (SB08)	33	34
	Extension of Time	35	35

Warnings:

Information:

Total Files Size (in bytes):	2349552

This Acknowledgement Receipt evidences receipt on the noted date by the USPTO of the indicated documents, characterized by the applicant, and including page counts, where applicable. It serves as evidence of receipt similar to a Post Card, as described in MPEP 503.

<u>New Applications Under 35 U.S.C. 111</u>
If a new application is being filed and the application includes the necessary components for a filing date (see 37 CFR 1.53(b)-(d) and MPEP 506), a Filing Receipt (37 CFR 1.54) will be issued in due course and the date shown on this Acknowledgement Receipt will establish the filing date of the application.

<u>National Stage of an International Application under 35 U.S.C. 371</u>
If a timely submission to enter the national stage of an international application is compliant with the conditions of 35 U.S.C. 371 and other applicable requirements a Form PCT/DO/EO/903 indicating acceptance of the application as a national stage submission under 35 U.S.C. 371 will be issued in addition to the Filing Receipt, in due course.

<u>New International Application Filed with the USPTO as a Receiving Office</u>
If a new international application is being filed and the international application includes the necessary components for an international filing date (see PCT Article 11 and MPEP 1810), a Notification of the International Application Number and of the International Filing Date (Form PCT/RO/105) will be issued in due course, subject to prescriptions concerning national security, and the date shown on this Acknowledgement Receipt will establish the international filing date of the application.

IN THE UNITED STATES PATENT AND TRADEMARK OFFICE

Inventor(s):	Jeremy J. Lemoine	Examiner: STEVEN J. COTRONEO
Serial No.:	15/397,959	Group Art Unit: 3733
Filed:	January 4, 2017	Docket No.: 4394.G10US2
Confirmation No.: 4057		
Title:	BONE SCREW INCLUDING A DUAL THREAD CLOSURE MEMBER	

AMENDMENT & RESPONSE UNDER 37 C.F.R. § 1.111

Mail Stop Amendment
Commissioner for Patents
P.O. Box 1450
Alexandria, VA 22313-1450

In response to the Non-Final Office Action dated January 25, 2018, please enter the following amendments and consider the subsequent supporting remarks.

This response is accompanied by a Petition, as well as the appropriate fee, to obtain a two-month extension of the period for responding to the Office Action, thereby moving the deadline for response from April 25, 2018 to June 25, 2018.

IN THE CLAIMS

Please amend the claims as follows:

1. (Canceled)

2. (Currently Amended) A vertebral fastener comprising:

a housing and a bone engaging shaft extending from the housing, the housing including a first leg and a second leg extending from a base portion of the housing and defining a channel between the first leg and the second leg for receiving a connecting member therethrough, the bone engaging shaft having a distal region and a proximal region, wherein a first helical thread extends across the distal region and the proximal region, wherein a second helical thread extends across the proximal region and is located between adjacent windings of the first helical thread, and

a closure member configured to threadably engage the first and second legs of the housing;

wherein the closure member includes a first thread and a second thread intertwined with the first thread, the first thread having a start proximate a lower surface of the closure member and the second thread having a start proximate the lower surface of the closure member, and wherein the closure member is configured such that the start of the first thread of the closure member threadably initiates threaded engagement with the first leg of the housing substantially simultaneously as the start of the second thread initiates threaded engagement with the second leg of the housing.

3. (Previously Presented) The vertebral fastener of claim 2, wherein the start of the first thread of the closure member is angularly displaced about 180 degrees about a longitudinal axis of the closure member from the start of the second thread of the closure member.

4. (Canceled)

5. (Previously Presented) The vertebral fastener of claim 4, wherein the housing includes a first discontinuous thread and a second discontinuous thread intertwined with the first discontinuous thread.

6. (Previously Presented) The vertebral fastener of claim 5, wherein the first discontinuous thread of the housing has a start at an upper extent of the first leg of the housing and the second discontinuous thread of the housing has a start at an upper extent of the second leg of the housing.

7. (Previously Presented) The vertebral fastener of claim 6, wherein when the closure member is threadably engaged with the housing between the first and second legs, an upper flank of the first thread of the closure member faces a lower flank of the second thread of the housing, and an upper flank of the second thread of the closure member faces a lower flank of the first thread of the housing.

8. (Previously Presented) The vertebral fastener of claim 7, wherein when the closure member is threadably engaged with the housing between the first and second legs, a lower flank of the first thread of the closure member faces an upper flank of the first thread of the housing, and a lower flank of the second thread of the closure member faces an upper flank of the second thread of the housing.

9. (Currently Amended) A bone screw comprising:

a housing including a base portion and first and second legs extending from the base portion, the first and second legs defining a threaded opening extending into the housing from an upper extent of the housing, and a channel intersecting the threaded opening for receiving a connecting member therethrough;

a threaded shaft extending from the housing for threadably engaging a bony structure, the threaded shaft having a distal region and a proximal region, wherein a first helical thread extends across the distal region and the proximal region, wherein a second helical thread extends across the proximal region and is located between adjacent windings of the first <u>helical</u> thread; and

a threaded closure member configured to be threaded into the threaded opening of the housing between the first and second legs to secure a connecting member in the channel;

wherein the threaded closure member includes a first thread and a second thread intertwined with the first thread; [[and]]

wherein the threaded opening includes a first discontinuous thread and a second discontinuous thread intertwined with the first discontinuous thread; and

wherein the closure member is configured such that the start of the first thread of the closure member threadably initiates threaded engagement with the first leg of the housing substantially simultaneously as the start of the second thread initiates threaded engagement with the second leg of the housing.

10. (Previously Presented) The bone screw of claim 9, wherein adjacent windings of the first thread of the closure member alternate with adjacent windings of the second thread of the closure member.

11. (Previously Presented) The bone screw of claim 10, wherein the first discontinuous thread of the threaded opening alternates with the second discontinuous thread of the threaded opening along an inner surface of each of the first and second legs.

12. (Previously Presented) The bone screw of claim 11, wherein the first thread of the threaded closure member has a start proximate a lower surface of the closure member and the second thread of the threaded closure member has a start proximate the lower surface of the closure member.

13. (Previously Presented) The bone screw of claim 12, wherein the start of the first thread of the closure member is angularly displaced about 180 degrees about a longitudinal axis of the closure member from the start of the second thread of the closure member.

14. (Canceled)

15. (Previously Presented) The bone screw of claim 9, wherein the first discontinuous thread of the threaded opening has a start at an upper extent of the first leg of the housing and the second discontinuous thread of the threaded opening has a start at an upper extent of the second leg of the housing.

16. (Previously Presented) The bone screw of claim 9, wherein when the closure member is threadably engaged in the threaded opening of the housing between the first and second legs, an upper flank of the first thread of the closure member faces a lower flank of the second discontinuous thread of the threaded opening, and an upper flank of the second thread of the closure member faces a lower flank of the first discontinuous thread of the threaded opening.

17. (Previously Presented) The bone screw of claim 9, wherein when the closure member is threadably engaged in the threaded opening of the housing between the first and second legs, a lower flank of the first thread of the closure member faces an upper flank of the first discontinuous thread of the threaded opening, and a lower flank of the second thread of the closure member faces an upper flank of the second discontinuous thread of the threaded opening.

REMARKS

This correspondence responds to the Non-Final Office Action dated January 25, 2018.

Claims 2 and 9 are presently amended. Claims 4 and 14 are presently canceled, and claim 1 was canceled previously. As a result, claims 2, 3, 5-13, and 15-17 are now pending in this application.

The Rejection of Claims Under §112

Claims 2-17 were rejected under 35 U.S.C. § 112 (pre-AIA), second paragraph, as being indefinite for failing to particularly point out and distinctly claim the subject matter which the applicant regards as the invention. More specifically, claims 2 and 9 were rejected due to an antecedent basis issue, which has been rectified with amendments presented above. Accordingly, the undersigned respectfully requests withdrawal of this ground of rejection.

The Rejection of Claims Under §103

Claims 2-17 were rejected under 35 U.S.C. § 103(a) as allegedly being unpatentable over Jackson (U.S. 6726689, hereinafter "Jackson") in view of Lin (U.S. 5520688, hereinafter "Lin") in view of Denis et al. (U.S. 2007/0233122, hereinafter "Denis"). The undersigned respectfully traverses this ground of rejection as detailed below.

For a rejection to be legally adequate under 35 U.S.C. § 103, every claim limitation must be taught, or be obvious to a person of ordinary skill in the art, in the combination of the references.[1] The undersigned respectfully submits that the cited references, whether considered alone or in any obvious combination, fail to teach or suggest at least the limtation amended into independent claims 2 and 9 with this response. Patentability of claims 2-17 will be discussed in reference to claim 2, as claims 3, 5-13, and 15-17, recite or incorporate similar limitations to those discussed in reference to claim 2.

Claim 2 presently recites the following limitation further characterizing the orientation of the *first and second intertwined threads*:

> wherein the closure member is configured such that the start of the first thread of the closure member threadably initiates threaded engagement with the

[1] *See Orthopedic Equipment, Inc. v. United States, 702* F.2d 1005,1013 (Fed. Cir. 1983).

> first leg of the housing substantially simultaneously as the start of the second thread initiates threaded engagement with the second leg of the housing.

The Office Action includes a citation to Lin as allegedly teaching a comparable concept.[2] However, the cited portion of Lin is completely silent regarding the relative orientation of the starting points of a first thread and a second thread. Rather, the cited portion of Lin merely discusses "that the first threaded portion and the second threaded portion are corresponding in the advancing distance (pitch) to each other." The cited portion of Lin only teaches that the allegedly intertwined threads discussed by Lin have the same thread pitch, which does not dictate the starting point of the threads. The cited portion of Lin, as well as the reminder of Lin's disclosure, fails to teach or suggest a "closure member is configured such that the start of the first thread of the closure member threadably initiates threaded engagement with the first leg of the housing substantially simultaneously as the start of the second thread initiates threaded engagement with the second leg of the housing," as presently recited by claim 2. The undersigned is unable to find any relevant teachings in Jackson or Denis to cure the identified deficiency in Lin. Accordingly, the undersigned respectfully submits that the cited combination of references, Jackson, Lin and Denis, fail to teach or suggest all elements presently recited by independent claims 2 and 9.

In the interest of brevity, the undersigned has pointed out only certain patentable distinctions between the current claims and the prior art. Other patentable distinctions may be present but not presently argued. Applicant reserves the right to later argue these additional distinctions.

For at least the reasons discussed above, the undersigned respectfully submits that the cited references, separately or in combination, fail to disclose or evidence all elements of the independent claims 2 and 9, and one of ordinary skill in the art would not be able to arrive at the recitations of the independent claims through any obvious modification of these references. Therefore, independent claims 2 and 9 are not obvious and are allowable over the cited references. Dependent claims 3, 5-8, 10-13, and 15-17 depend directly or indirectly from the independent claims and are independently allowable and allowable for their dependency on an allowable base claim. Accordingly, reconsideration and withdrawal of the rejections of claims 2, 3, 5-13, and 15-17 and allowance of all claims in the present application are respectfully requested.

---

[2] *See* Office Action, page 5 (*citing* Lin, col. 3, line 25).

Reservation of Rights

In the interest of clarity and brevity, every assertion made in the Office Action may not have been equally addressed. Silence regarding any such assertion does not constitute any admission or acquiescence. All rights not exercised in connection with this response, such as the right to challenge or rebut any tacit or explicit characterization of any reference or of any of the present claims, the right to challenge or rebut any asserted factual or legal basis of any of the rejections, the right to swear behind any cited reference such as provided under 37 C.F.R. § 1.131 or otherwise, or the right to assert co-ownership of any cited reference, are reserved. It is not admitted that any of the cited references or any other references of record are relevant to the present claims, or that they constitute prior art. To the extent that any rejection or assertion is based upon the Examiner's personal knowledge, rather than any objective evidence of record as manifested by a cited prior art reference, timely objection to such reliance on Official Notice is made, and all rights to request that the Examiner provide a reference or affidavit in support of such assertion, as required by MPEP § 2144.03, are reserved. All rights to pursue any cancelled claims in a subsequent patent application claiming the benefit of priority of the present patent application, and to request rejoinder of any withdrawn claim, as required by MPEP § 821.04, are likewise reserved.

CONCLUSION

It is respectfully submitted that the claims are in condition for allowance, and notification to that effect is earnestly requested. The Examiner is invited to telephone the undersigned at (612) 373-6904 to facilitate prosecution of this application.

If necessary, please charge any additional fees or deficiencies, or credit any overpayments to Deposit Account No. 19-0743.

Respectfully submitted,

SCHWEGMAN LUNDBERG & WOESSNER, P.A.
P.O. Box 2938
Minneapolis, MN 55402-0938
(612) 373-6900

Date 6/25/2018 By /Gregory M. Stark/

Gregory M. Stark
Reg. No. 62,731

Electronic Patent Application Fee Transmittal

Application Number:	15397959
Filing Date:	04-Jan-2017
Title of Invention:	BONE SCREW INCLUDING A DUAL THREAD CLOSURE MEMBER
First Named Inventor/Applicant Name:	Jeremy J. Lemoine
Filer:	Warren D. Woessner/Nellie Cole
Attorney Docket Number:	4394.G10US2

Filed as Large Entity

Filing Fees for **Utility under 35 USC 111(a)**

Description	Fee Code	Quantity	Amount	Sub-Total in USD($)
Basic Filing:				
Pages:				
Claims:				
Miscellaneous-Filing:				
Petition:				
Patent-Appeals-and-Interference:				
Post-Allowance-and-Post-Issuance:				
Extension-of-Time:				

Description	Fee Code	Quantity	Amount	Sub-Total in USD($)
Extension - 2 months with $0 paid	1252	1	600	600
Miscellaneous:				
			Total in USD ($)	**600**

Electronic Acknowledgement Receipt	
EFS ID:	32994612
Application Number:	15397959
International Application Number:	
Confirmation Number:	4957
Title of Invention:	BONE SCREW INCLUDING A DUAL THREAD CLOSURE MEMBER
First Named Inventor/Applicant Name:	Jeremy J. Lemoine
Customer Number:	104326
Filer:	Warren D. Woessner/Nellie Cole
Filer Authorized By:	Warren D. Woessner
Attorney Docket Number:	4394.G10US2
Receipt Date:	25-JUN-2018
Filing Date:	04-JAN-2017
Time Stamp:	15:50:12
Application Type:	Utility under 35 USC 111(a)

Payment information:

Submitted with Payment	yes
Payment Type	DA
Payment was successfully received in RAM	$600
RAM confirmation Number	062618INTEFSW00002561190743
Deposit Account	190743
Authorized User	Nellie Cole
The Director of the USPTO is hereby authorized to charge indicated fees and credit any overpayment as follows: 37 CFR 1.16 (National application filing, search, and examination fees) 37 CFR 1.17 (Patent application and reexamination processing fees)	

37 CFR 1.19 (Document supply fees)

37 CFR 1.20 (Post Issuance fees)

37 CFR 1.21 (Miscellaneous fees and charges)

File Listing:

Document Number	Document Description	File Name	File Size(Bytes)/ Message Digest	Multi Part /.zip	Pages (if appl.)
1		4394G10US2_Response.pdf	167403 1e969bcbdd43fdb16833118977144a0fa90c5e85	yes	11
	Multipart Description/PDF files in .zip description				
	Document Description		**Start**	**End**	
	Transmittal Letter		1	1	
	Extension of Time		2	2	
	Amendment/Req. Reconsideration-After Non-Final Reject		3	3	
	Claims		4	7	
	Applicant Arguments/Remarks Made in an Amendment		8	11	
Warnings:					
Information:					
2	Fee Worksheet (SB06)	fee-info.pdf	30722 7f1c6dd8a469e6536f8824ba31c237bc4732633a	no	2
Warnings:					
Information:					
		Total Files Size (in bytes):	198125		

This Acknowledgement Receipt evidences receipt on the noted date by the USPTO of the indicated documents, characterized by the applicant, and including page counts, where applicable. It serves as evidence of receipt similar to a Post Card, as described in MPEP 503.

New Applications Under 35 U.S.C. 111
If a new application is being filed and the application includes the necessary components for a filing date (see 37 CFR 1.53(b)-(d) and MPEP 506), a Filing Receipt (37 CFR 1.54) will be issued in due course and the date shown on this Acknowledgement Receipt will establish the filing date of the application.
National Stage of an International Application under 35 U.S.C. 371
If a timely submission to enter the national stage of an international application is compliant with the conditions of 35 U.S.C. 371 and other applicable requirements a Form PCT/DO/EO/903 indicating acceptance of the application as a national stage submission under 35 U.S.C. 371 will be issued in addition to the Filing Receipt, in due course.
New International Application Filed with the USPTO as a Receiving Office
If a new international application is being filed and the international application includes the necessary components for an international filing date (see PCT Article 11 and MPEP 1810), a Notification of the International Application Number and of the International Filing Date (Form PCT/RO/105) will be issued in due course, subject to prescriptions concerning national security, and the date shown on this Acknowledgement Receipt will establish the international filing date of the application.

IN THE UNITED STATES PATENT AND TRADEMARK OFFICE

Inventor(s): Jeremy J. Lemoine
Title: BONE SCREW INCLUDING A DUAL THREAD CLOSURE MEMBER

Docket No.:	4394.G10US2	Serial No.:	15/397,959
Filed:	January 4, 2017	Due Date:	June 25, 2018
Examiner:	Steven Cotroneo	Group Art Unit:	3733
Customer No.:	104326	Confirmation No.:	4957

Mail Stop Amendment
Commissioner for Patents
P.O. Box 1450
Alexandria, VA 22313-1450

We are transmitting herewith the following attached items (as indicated with an "X"):

X Amendment and Response under 37 C.F.R. § 1.111 (9 pgs.)
X Petition for Extension of Time (1 pg.)
X Authorization to charge Deposit Account 19-0743 in the amount of $600.00 to cover the Extension of Time Fee.

If not provided for in a separate paper filed herewith, please consider this a PETITION FOR EXTENSION OF TIME for sufficient number of months to enter these papers and please charge any additional fees or credit overpayment to Deposit Account No. 19-0743. If applicable, any papers or fees supplied herewith are considered to be timely filed pursuant to 37 C.F.R. § 1.7(a), the response period falling on a Federal Holiday, Saturday or Sunday being extended to the next succeeding business day.

SCHWEGMAN LUNDBERG & WOESSNER, P.A.
Customer No.: 104326

By: _____
Gregory M. Stark
Reg. No. 62,751

S/N 15/397,959 **PATENT**

IN THE UNITED STATES PATENT AND TRADEMARK OFFICE

Inventor(s):	Jeremy J. Lemoine	Examiner:	Steven Cotroneo
Serial No.:	15/397,959	Group Art Unit:	3733
Filed:	January 4, 2017	Docket:	4394.G10US2
Customer No.:	104326	Confirmation No.:	4957
Title:	BONE SCREW INCLUDING A DUAL THREAD CLOSURE MEMBER		

PETITION FOR A TWO-MONTH EXTENSION OF TIME

Mail Stop Amendment
Commissioner for Patents
P.O. Box 1450
Alexandria, VA 22313-1450

In accordance with the provision of 37 C.F.R § 1.136(a), it is respectfully requested that a two-month extension of time be granted in which to respond to the Non-Final Office Action mailed January 25, 2018, said period of response being extended from April 25, 2018 to June 25, 2018.

Please charge Deposit Account No. 19-0743 in the amount of $600.00 to cover the required extension fee. Please charge any additional fees or credit overpayment to deposit Account No. 19-0743.

Respectfully submitted,

SCHWEGMAN LUNDBERG & WOESSNER, P.A.
P.O. Box 2938
Minneapolis, MN 55402
(612) 373-6904

Date 6/25/2018

By _____
Gregory M. Stark
Reg. No. 62,731

PTO/SB/06 (09-11)
Approved for use through 1/31/2014. OMB 0651-0032
U.S. Patent and Trademark Office; U.S. DEPARTMENT OF COMMERCE
Under the Paperwork Reduction Act of 1995, no persons are required to respond to a collection of information unless it displays a valid OMB control number.

PATENT APPLICATION FEE DETERMINATION RECORD Substitute for Form PTO-875	Application or Docket Number 15/397,959	Filing Date 01/04/2017	☐ To be Mailed

ENTITY: ☒ LARGE ☐ SMALL ☐ MICRO

APPLICATION AS FILED – PART I

FOR	(Column 1) NUMBER FILED	(Column 2) NUMBER EXTRA	RATE ($)	FEE ($)
☐ BASIC FEE (37 CFR 1.16(a), (b), or (c))	N/A	N/A	N/A	
☐ SEARCH FEE (37 CFR 1.16(k), (i), or (m))	N/A	N/A	N/A	
☐ EXAMINATION FEE (37 CFR 1.16(o), (p), or (q))	N/A	N/A	N/A	
TOTAL CLAIMS (37 CFR 1.16(i))	minus 20 =	*	X $ =	
INDEPENDENT CLAIMS (37 CFR 1.16(h))	minus 3 =	*	X $ =	
☐ APPLICATION SIZE FEE (37 CFR 1.16(s))	If the specification and drawings exceed 100 sheets of paper, the application size fee due is $310 ($155 for small entity) for each additional 50 sheets or fraction thereof. See 35 U.S.C. 41(a)(1)(G) and 37 CFR 1.16(s).			
☐ MULTIPLE DEPENDENT CLAIM PRESENT (37 CFR 1.16(j))				
* If the difference in column 1 is less than zero, enter "0" in column 2.			TOTAL	

APPLICATION AS AMENDED – PART II

AMENDMENT

06/25/2018	(Column 1) CLAIMS REMAINING AFTER AMENDMENT		(Column 2) HIGHEST NUMBER PREVIOUSLY PAID FOR	(Column 3) PRESENT EXTRA	RATE ($)	ADDITIONAL FEE ($)
Total (37 CFR 1.16(i))	* 14	Minus	** 20	= 0	X $100 =	0
Independent (37 CFR 1.16(h))	* 2	Minus	***3	= 0	X $460 =	0
☐ Application Size Fee (37 CFR 1.16(s))						
☐ FIRST PRESENTATION OF MULTIPLE DEPENDENT CLAIM (37 CFR 1.16(j))						
					TOTAL ADD'L FEE	**0**

AMENDMENT

	(Column 1) CLAIMS REMAINING AFTER AMENDMENT		(Column 2) HIGHEST NUMBER PREVIOUSLY PAID FOR	(Column 3) PRESENT EXTRA	RATE ($)	ADDITIONAL FEE ($)
Total (37 CFR 1.16(i))	*	Minus	**	=	X $ =	
Independent (37 CFR 1.16(h))	*	Minus	***	=	X $ =	
☐ Application Size Fee (37 CFR 1.16(s))						
☐ FIRST PRESENTATION OF MULTIPLE DEPENDENT CLAIM (37 CFR 1.16(j))						
					TOTAL ADD'L FEE	

* If the entry in column 1 is less than the entry in column 2, write "0" in column 3.
** If the "Highest Number Previously Paid For" IN THIS SPACE is less than 20, enter "20".
*** If the "Highest Number Previously Paid For" IN THIS SPACE is less than 3, enter "3".
The "Highest Number Previously Paid For" (Total or Independent) is the highest number found in the appropriate box in column 1.

SLIE
MARIDOL GARCIA JOY

This collection of information is required by 37 CFR 1.16. The information is required to obtain or retain a benefit by the public which is to file (and by the USPTO to process) an application. Confidentiality is governed by 35 U.S.C. 122 and 37 CFR 1.14. This collection is estimated to take 12 minutes to complete, including gathering, preparing, and submitting the completed application form to the USPTO. Time will vary depending upon the individual case. Any comments on the amount of time you require to complete this form and/or suggestions for reducing this burden, should be sent to the Chief Information Officer, U.S. Patent and Trademark Office, U.S. Department of Commerce, P.O. Box 1450, Alexandria, VA 22313-1450. DO NOT SEND FEES OR COMPLETED FORMS TO THIS ADDRESS. **SEND TO: Commissioner for Patents, P.O. Box 1450, Alexandria, VA 22313-1450.**
If you need assistance in completing the form, call 1-800-PTO-9199 and select option 2.

UNITED STATES PATENT AND TRADEMARK OFFICE

UNITED STATES DEPARTMENT OF COMMERCE
United States Patent and Trademark Office
Address: COMMISSIONER FOR PATENTS
P.O. Box 1450
Alexandria, Virginia 22313-1450
www.uspto.gov

APPLICATION NO.	FILING DATE	FIRST NAMED INVENTOR	ATTORNEY DOCKET NO.	CONFIRMATION NO.
15/397,959	01/04/2017	Jeremy J. Lemoine	4394.G10US2	4957

104326 7590 11/05/2018
Schwegman Lundberg & Woessner / Zimmer
P.O. Box 2938
Minneapolis, MN 55402

EXAMINER
COTRONEO, STEVEN J

ART UNIT	PAPER NUMBER
3773	

NOTIFICATION DATE	DELIVERY MODE
11/05/2018	ELECTRONIC

Please find below and/or attached an Office communication concerning this application or proceeding.

The time period for reply, if any, is set in the attached communication.

Notice of the Office communication was sent electronically on above-indicated "Notification Date" to the following e-mail address(es):

SLW@blackhillsip.com
USPTO@slwip.com

PTOL-90A (Rev. 04/07)

Office Action Summary	Application No. 15/397,959	Applicant(s) Lemoine, Jeremy J.	
	Examiner STEVEN J COTRONEO	Art Unit 3773	AIA Status No

-- The MAILING DATE of this communication appears on the cover sheet with the correspondence address --

Period for Reply

A SHORTENED STATUTORY PERIOD FOR REPLY IS SET TO EXPIRE 3 MONTHS FROM THE MAILING DATE OF THIS COMMUNICATION.

- Extensions of time may be available under the provisions of 37 CFR 1.136(a). In no event, however, may a reply be timely filed after SIX (6) MONTHS from the mailing date of this communication.
- If NO period for reply is specified above, the maximum statutory period will apply and will expire SIX (6) MONTHS from the mailing date of this communication.
- Failure to reply within the set or extended period for reply will, by statute, cause the application to become ABANDONED (35 U.S.C. § 133). Any reply received by the Office later than three months after the mailing date of this communication, even if timely filed, may reduce any earned patent term adjustment. See 37 CFR 1.704(b).

Status

1)☑ Responsive to communication(s) filed on 6/25/2018.

☐ A declaration(s)/affidavit(s) under **37 CFR 1.130(b)** was/were filed on _____.

2a)☑ This action is **FINAL.** 2b) ☐ This action is non-final.

3)☐ An election was made by the applicant in response to a restriction requirement set forth during the interview on _____; the restriction requirement and election have been incorporated into this action.

4)☐ Since this application is in condition for allowance except for formal matters, prosecution as to the merits is closed in accordance with the practice under *Ex parte Quayle*, 1935 C.D. 11, 453 O.G. 213.

Disposition of Claims*

5) ☑ Claim(s) 2-3,5-13 and 15-17 is/are pending in the application.

5a) Of the above claim(s) _____ is/are withdrawn from consideration.

6) ☐ Claim(s) _____ is/are allowed.

7) ☑ Claim(s) 2-3,5-13 and 15-17 is/are rejected.

8) ☐ Claim(s) _____ is/are objected to.

9) ☐ Claim(s) _____ are subject to restriction and/or election requirement

* If any claims have been determined allowable, you may be eligible to benefit from the **Patent Prosecution Highway** program at a participating intellectual property office for the corresponding application. For more information, please see http://www.uspto.gov/patents/init_events/pph/index.jsp or send an inquiry to **PPHfeedback@uspto.gov.**

Application Papers

10)☐ The specification is objected to by the Examiner.

11)☐ The drawing(s) filed on _____ is/are: a)☐ accepted or b)☐ objected to by the Examiner.

Applicant may not request that any objection to the drawing(s) be held in abeyance. See 37 CFR 1.85(a).

Replacement drawing sheet(s) including the correction is required if the drawing(s) is objected to. See 37 CFR 1.121(d).

Priority under 35 U.S.C. § 119

12)☐ Acknowledgment is made of a claim for foreign priority under 35 U.S.C. § 119(a)-(d) or (f).

Certified copies:

a)☐ All b)☐ Some** c)☐ None of the:

1.☐ Certified copies of the priority documents have been received.

2.☐ Certified copies of the priority documents have been received in Application No. _____.

3.☐ Copies of the certified copies of the priority documents have been received in this National Stage application from the International Bureau (PCT Rule 17.2(a)).

** See the attached detailed Office action for a list of the certified copies not received.

Attachment(s)

1) ☑ Notice of References Cited (PTO-892)

2) ☐ Information Disclosure Statement(s) (PTO/SB/08a and/or PTO/SB/08b) Paper No(s)/Mail Date _____.

3) ☐ Interview Summary (PTO-413) Paper No(s)/Mail Date _____.

4) ☐ Other: _____.

DETAILED ACTION

Notice of Pre-AIA or AIA Status

The present application is being examined under the pre-AIA first to invent provisions.

Claim Rejections - 35 USC § 103

The following is a quotation of pre-AIA 35 U.S.C. 103(a) which forms the basis for all obviousness rejections set forth in this Office action:

> (a) A patent may not be obtained though the invention is not identically disclosed or described as set forth in section 102 of this title, if the differences between the subject matter sought to be patented and the prior art are such that the subject matter as a whole would have been obvious at the time the invention was made to a person having ordinary skill in the art to which said subject matter pertains. Patentability shall not be negatived by the manner in which the invention was made.

Claims 2-3, 5-13 and 15-17 are rejected under pre-AIA 35 U.S.C. 103(a) as being unpatentable over Jackson (US 6,726,689) in view of Lin (US 5,520,688) and in view of Denis et al. (US 2007/0233122).

With respect to claim 2, Jackson discloses a vertebral fastener (see fig 3 below) comprising: a housing (fig 3, 10) and a bone engaging portion (fig 3, 16) extending from the housing, the housing including a first leg (fig 3, 18) and a second leg (fig 3, 18) extending from a base portion of the housing and defining a channel (abstract open headed) between the first leg and the second leg for receiving a connecting member therethrough; and a closure member (fig 3, 11) configured to threadably engage the first and second legs of the housing. With respect to claim 9, Jackson discloses bone screw comprising: a housing (fig 3, 10) including a base portion and first and second legs (fig 3, 18) extending from the base portion, the first and second legs defining a threaded opening (fig 3, 22) extending into the housing from an upper extent of the housing, and a channel (fig 3, 19) intersecting the threaded opening for receiving a connecting member (fig 3, 12) therethrough; a threaded shaft (fig 3, 16) extending from the

housing for threadably engaging a bony structure; and a threaded closure member (fig 3, 11) configured to be threaded into the threaded opening of the housing between the first and second legs to secure a connecting member in the channel (fig 3).

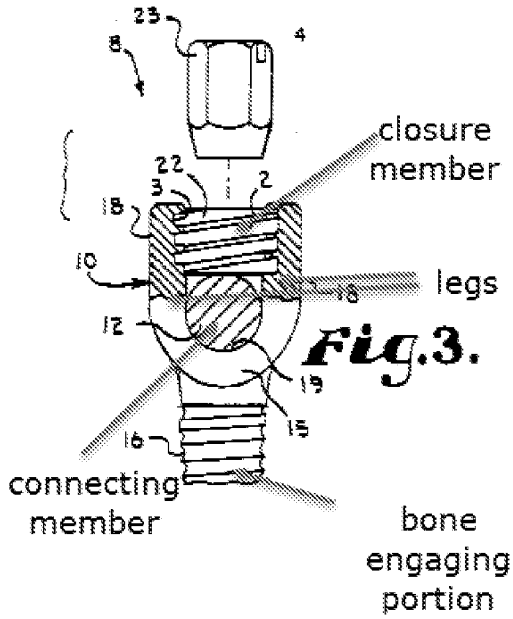

Jackson does not disclose wherein the threaded closure member includes a first thread and a second thread intertwined with the first thread; and wherein the threaded opening includes a first discontinuous thread and a second discontinuous thread intertwined with the first discontinuous thread and Jackson does not disclose the bone engaging shaft having a distal region and a proximal region, wherein a first helical thread extends across the distal region and the proximal region, wherein a second helical thread extends across the proximal region and is located between adjacent windings of the first thread.

Lin discloses a threaded closure member (fig 1, 220) includes a first thread and a second thread intertwined with the first thread (col. 2, ll. 32-38 "However, the double-threaded self-

locking screw of the present invention is characterized in that its second threaded portion has two to six, preferably two to four, intertwined threads which are spaced at a substantially equal distance, and each of the intertwined threads has a pitch substantially equal to the pitch of the first threaded portion of the double-threaded self-locking screw"); and wherein the threaded opening includes a first discontinuous thread and a second discontinuous thread intertwined with the first discontinuous thread (opening 120 is threaded for receiving 220) to reinforce the fixation (col. 1, ll. 29). With respect to claim 2, Lin discloses wherein the closure member is configured such that the start of the first thread of the closure member threadably initiates threaded engagement with the first leg of the housing substantially simultaneously as the start of the second thread initiates threaded engagement with the second leg of the housing (col. 3, ll. 25, threads advance together and meet the limitations of being 180 degrees apart a recitation of the intended use of the claimed invention must result in a structural difference between the claimed invention and the prior art in order to patentably distinguish the claimed invention from the prior art. If the prior art structure is capable of performing the intended use, then it meets the claim.) With respect to claim 3, Lin discloses wherein the start of the first thread of the closure member is angularly displaced about 180 degrees about a longitudinal axis of the closure member from the start of the second thread of the closure member (col. 3, ll. 6, threads offset). With respect to claim 5, Lin discloses wherein the housing includes a first discontinuous thread and a second discontinuous thread intertwined with the first discontinuous thread (threads in 120 correspond to the threads of 220). With respect to claim 10, Lin discloses wherein adjacent windings of the first thread of the closure member alternate with adjacent windings of the second thread of the closure member (col. 2, ll. 36, intertwined threads). With respect to claim

11, Lin discloses wherein the first discontinuous thread of the threaded opening alternates with the second discontinuous thread of the threaded opening along an inner surface of each of the first and second legs 9threads of 120 corresponds to 220).

Denis et al. discloses a bone engaging shaft having a distal region (fig 2, l1) and a proximal region (fig 2, l2), wherein a first helical thread (fig 2, 64) extends across the distal region and the proximal region, wherein a second helical thread (fig 2, 62) extends across the proximal region and is located between adjacent windings of the first thread (fig 2) to allow the threads to better purchase both cortical and cancellous bone (abstract).

It would have been obvious at the time of the invention to one of ordinary skill in the art to modify the device of Jackson to include wherein the threaded closure member includes a first thread and a second thread intertwined with the first thread; and wherein the threaded opening includes a first discontinuous thread and a second discontinuous thread intertwined with the first discontinuous thread in view of Lin in order to reinforce the fixation and it would have been obvious at the time of the invention to one of ordinary skill in the art to modify the device of Jackson to include the bone engaging shaft having a distal region and a proximal region, wherein a first helical thread extends across the distal region and the proximal region, wherein a second helical thread extends across the proximal region and is located between adjacent windings of the first thread in view of Denis et al. in order to allow the threads to better purchase both cortical and cancellous bone. With respect to claims 2 and 12, Jackson in view of Lin and wherein the first thread of the threaded closure member has a start proximate a lower surface of the closure member and the second thread of the threaded closure member has a start proximate the lower surface of the closure member (Jackson discloses the threads

on the closure starts at the bottom surface (fig 2, 38) and Lin discloses the threads are offset). With respect to claims 6 and 15, Jackson in view of Lin discloses disclosing wherein the first discontinuous thread of the housing has a start at an upper extent of the first leg of the housing and the second discontinuous thread of the housing has a start at an upper extent of the second leg of the housing (Lin teaches the threads are offset and Jackson discloses threading beginning at the top surface). With respect to claims 7 and 16, Jackson discloses wherein when the closure member is threadably engaged in the threaded opening of the housing between the first and second legs, an upper flank of the first thread of the closure member faces a lower flank of the second discontinuous thread of the threaded opening, and an upper flank of the second thread of the closure member faces a lower flank of the first discontinuous thread of the threaded opening (threads of figure 9, have flanks of the threads of the closure member facing the flanks of the threads of the housing). With respect to claims 8 and 17, Jackson discloses wherein when the closure member is threadably engaged in the threaded opening of the housing between the first and second legs, a lower flank of the first thread of the closure member faces an upper flank of the first discontinuous thread of the threaded opening, and a lower flank of the second thread of the closure member faces an upper flank of the second discontinuous thread of the threaded opening (threads of figure 9, have flanks of the threads of the closure member facing the flanks of the threads of the housing). With respect to claim 13, Jackson in view of Lin discloses wherein the start of the first thread of the closure member is angularly displaced about 180 degrees about a longitudinal axis of the closure member from the start of the second thread of the closure member (Lin discloses two intertwined threads). With respect to claim 9, Jackson in view of Lin discloses wherein the first thread of the threaded

closure member has a start proximate a lower surface of the closure member and the second thread of the threaded closure member has a start proximate the lower surface of the closure member wherein the closure member is configured such that the start of the first thread of the closure member threadably initiates threaded engagement with the first leg of the housing substantially simultaneously as the start of the second thread initiates threaded engagement with the second leg of the housing ((col. 3, ll. 25, threads advance together and meet the limitations of being 180 degrees apart a recitation of the intended use of the claimed invention must result in a structural difference between the claimed invention and the prior art in order to patentably distinguish the claimed invention from the prior art. If the prior art structure is capable of performing the intended use, then it meets the claim and Jackson discloses the thread starts at the bottom of the closure member (fig 2).

Response to Arguments

Applicant's arguments, see remarks, filed 6/25/2018, with respect to the U.S.C. 112 rejection of claims 2-17 have been fully considered and are persuasive. The U.S.C. 112 rejection of claims 2-17 has been withdrawn.

Applicant's arguments filed 6/25/2018 have been fully considered but they are not persuasive. The applicant argues that Jackson in view of Lin and in view of Denis does not disclose "wherein the closure member is configured such that the start of the first thread of the closure member threadably initiates threaded engagement with the first leg of the housing substantially simultaneously as the start of the second thread initiates threaded engagement with the second leg of the housing" because the references do not explicitly disclose this feature. The examiner respect fully disagrees. In response to applicant's argument that Jackson in view of Lin and Denis do not disclose the threads simultaneously engage, a recitation of the intended use of the claimed invention must result in a

structural difference between the claimed invention and the prior art in order to patentably distinguish the claimed invention from the prior art. If the prior art structure is capable of performing the intended use, then it meets the claim. Lin discloses in Col. 3, ll. 25, threads advance together and meet the limitations of being 180 degrees apart (col. 3, ll. 6) such that although the reference does not explicitly disclose that they are simultaneously engaged the closure would be capable of because the threads are aligned as in the claimed invention.

The rejection is deemed proper.

Conclusion

THIS ACTION IS MADE FINAL. Applicant is reminded of the extension of time policy as set forth in 37 CFR 1.136(a).

A shortened statutory period for reply to this final action is set to expire THREE MONTHS from the mailing date of this action. In the event a first reply is filed within TWO MONTHS of the mailing date of this final action and the advisory action is not mailed until after the end of the THREE-MONTH shortened statutory period, then the shortened statutory period will expire on the date the advisory action is mailed, and any extension fee pursuant to 37 CFR 1.136(a) will be calculated from the mailing date of the advisory action. In no event, however, will the statutory period for reply expire later than SIX MONTHS from the mailing date of this final action.

Any inquiry concerning this communication or earlier communications from the examiner should be directed to STEVEN J COTRONEO whose telephone number is (571)270-7388. The examiner can normally be reached on Monday-Friday 9am-5pm EST.

Examiner interviews are available via telephone, in-person, and video conferencing using a USPTO supplied web-based collaboration tool. To schedule an interview, applicant is encouraged to use the USPTO Automated Interview Request (AIR) at http://www.uspto.gov/interviewpractice.

If attempts to reach the examiner by telephone are unsuccessful, the examiner's supervisor, Eduardo Robert can be reached on (571) 272-4719. The fax phone number for the organization where this application or proceeding is assigned is 571-273-8300.

Information regarding the status of an application may be obtained from the Patent Application Information Retrieval (PAIR) system. Status information for published applications may be obtained from either Private PAIR or Public PAIR. Status information for unpublished applications is available through Private PAIR only. For more information about the PAIR system, see http://pair-direct.uspto.gov. Should you have questions on access to the Private PAIR system, contact the Electronic Business Center (EBC) at 866-217-9197 (toll-free). If you would like assistance from a USPTO Customer Service Representative or access to the automated information system, call 800-786-9199 (IN USA OR CANADA) or 571-272-1000.

/S.J.C/
Examiner, Art Unit 3773
/NICHOLAS J PLIONIS/
Primary Examiner, Art Unit 3773

Notice of References Cited	Application/Control No. 15/397,959	Applicant(s)/Patent Under Reexamination Lemoine, Jeremy J.	
	Examiner STEVEN J COTRONEO	Art Unit 3773	Page 1 of 1

U.S. PATENT DOCUMENTS

*		Document Number Country Code-Number-Kind Code	Date MM-YYYY	Name	CPC Classification	US Classification
*	A	US-6726689-B2	04-2004	Jackson; Roger P.	A61B17/7032	411/411
*	B	US-5520588-A	05-1996	Hall, III; Arthur	F16H3/66	475/218
*	C	US-20070233122-A1	10-2007	Denis; Francis	A61B17/7032	606/247
	D					
	E					
	F					
	G					
	H					
	I					
	J					
	K					
	L					
	M					

FOREIGN PATENT DOCUMENTS

*		Document Number Country Code-Number-Kind Code	Date MM-YYYY	Country	Name	CPC Classification
	N					
	O					
	P					
	Q					
	R					
	S					
	T					

NON-PATENT DOCUMENTS

*		Include as applicable: Author, Title Date, Publisher, Edition or Volume, Pertinent Pages)
	U	
	V	
	W	
	X	

*A copy of this reference is not being furnished with this Office action. (See MPEP § 707.05(a).)
Dates in MM-YYYY format are publication dates. Classifications may be US or foreign.

Index of Claims	Application/Control No.	Applicant(s)/Patent Under Reexamination
	15/397,959	Lemoine, Jeremy J.
	Examiner	**Art Unit**
	STEVEN J COTRONEO	3773

✓	Rejected	-	Cancelled	N	Non-Elected	A	Appeal
=	Allowed	÷	Restricted	I	Interference	O	Objected

CLAIMS

☐ Claims renumbered in the same order as presented by applicant ☐ CPA ☐ T.D. ☐ R.1.47

CLAIM		DATE								
Final	Original	01/10/2018	10/29/2018							
	1	-	-							
	2	✓	✓							
	3	✓	✓							
	4	✓	-							
	5	✓	✓							
	6	✓	✓							
	7	✓	✓							
	8	✓	✓							
	9	✓	✓							
	10	✓	✓							
	11	✓	✓							
	12	✓	✓							
	13	✓	✓							
	14	✓	-							
	15	✓	✓							
	16	✓	✓							
	17	✓	✓							

Search Notes	Application/Control No.	Applicant(s)/Patent Under Reexamination
	15/397,959	Lemoine, Jeremy J.
	Examiner	**Art Unit**
	STEVEN J COTRONEO	3773

CPC - Searched*		
Symbol	**Date**	**Examiner**
A61B17/70-7046	1/10/2018	SJC
F16B25/0068	1/10/2018	SJC
updated search	10/29/2018	SJC

CPC Combination Sets - Searched*		
Symbol	**Date**	**Examiner**

US Classification - Searched*			
Class	**Subclass**	**Date**	**Examiner**

* See search history printout included with this form or the SEARCH NOTES box below to determine the scope of the search.

Search Notes		
Search Notes	**Date**	**Examiner**
Class and text search in EAST	1/10/2018	SJC
Inventor name search	1/10/2018	SJC

Interference Search			
US Class/CPC Symbol	**US Subclass/CPC Group**	**Date**	**Examiner**

EAST Search History

EAST Search History (Prior Art)

Ref #	Hits	Search Query	DBs	Default Operator	Plurals	Time Stamp
L1	10099	A61B17/70-7046.cpc.	US-PGPUB; USPAT; EPO; JPO	OR	OFF	2018/10/29 08:06
L2	214	F16B25/0068.cpc.	US-PGPUB; USPAT; EPO; JPO	OR	OFF	2018/10/29 08:06
L3	10313	(L1 or L2)	US-PGPUB; USPAT; EPO; JPO	OR	OFF	2018/10/29 08:06
L4	289	L3 and @pd>"20180120"	USPAT	OR	OFF	2018/10/29 08:06
L5	603	L3 and @pd>"20180120"	US-PGPUB; USPAT; FPRS; EPO; JPO	OR	OFF	2018/10/29 08:06

10/29/2018 8:07:25 AM
C:\Users\scotroneo\Documents\EAST\Workspaces\13\13771442.wsp

IN THE UNITED STATES PATENT AND TRADEMARK OFFICE

Inventor(s): Jeremy J. Lemoine
Title: BONE SCREW INCLUDING A DUAL THREAD CLOSURE MEMBER

Docket No.:	4394.G10US2	Serial No.:	15/397,959
Filed:	January 4, 2017	Due Date:	N/A
Examiner:	Steven Cotroneo	Group Art Unit:	3773
Customer No.:	104326	Confirmation No.:	4957

Commissioner for Patents
P.O. Box 1450
Alexandria, VA 22313-1450

We are transmitting herewith the following attached items (as indicated with an "X"):

X Express Abandonment Under 37 C.F.R. §1.138 (3 pgs.)

If not provided for in a separate paper filed herewith, please consider this a PETITION FOR EXTENSION OF TIME for sufficient number of months to enter these papers and please charge any additional fees or credit overpayment to Deposit Account No. 19-0743. If applicable, any papers or fees supplied herewith are considered to be timely filed pursuant to 37 C.F.R. § 1.7(a), the response period falling on a Federal Holiday, Saturday or Sunday being extended to the next succeeding business day.

SCHWEGMAN LUNDBERG & WOESSNER, P.A.
Customer No.: 104326

By: _____
Gregory M. State
Reg. No. 62,751

A/N 15/397,959 **PATENT**

IN THE UNITED STATES PATENT AND TRADEMARK OFFICE

Inventor(s): Jeremy J. Lemoine
Examiner: STEVEN J. COTRONEO
Application No.: 15/397,959
Group Art Unit: 3773
Filed: January 4, 2017
Docket No.: 4394.G10US2
Confirmation No.: 4957
Title: BONE SCREW INCLUDING A DUAL THREAD CLOSURE MEMBER

EXPRESS ABANDONMENT UNDER 37 C.F.R. § 1.138

Mail Stop Express Abandonment
Commissioner for Patents
P.O. Box 1450
Alexandria, VA 22313-1450

Applicant has become aware of prior art impacting the patentability of the claims pending in this application and is hereby Expressly Abandoning as a result. Please enter the following remarks into the record of this application.

Applicant does not believe any fees are due in support of this filing, as a response to the outstanding Non-Final Office Action dated December 4, 2019 is still within the 3-month deadline and no fee for Express Abandonment is indicated in 37 C.F.R. § 1.138. However, if the undersigned has misunderstood the applicable rules, please charge any necessary fees to Deposit Account No. 19-0743.

REMARKS

This correspondence is not intended as a response to the Non-Final Office Action dated December 4, 2019, but rather as an Express Abandonment of Application Serial Number 15/397,959. Accordingly, no response to the Non-Final Office Action dated December 4, 2019 will be filed by Applicant or the undersigned as the attorney of record in this matter.

Newly Discovered Prior Art

Applicant and the undersigned representative recently became aware of Oberg's Machinery Handbook, 28th Edition, which is a reference book that discusses conventional thread forms for use in a variety of applications. Oberg's Machinery Handbook, 28th Edition, includes disclosure explaining how to produce a screw with multi-start threads on a CNC machine.[1] The Machinery Handbook states that, "[i]n order to achieve proper distribution of each start around the cylinder, each thread has to start at an equal angle, determined by the following calculation: Thread cylindrical spacing angle = 360 / Number of starts."[2] Based on this disclosure, Applicant's previous argument regarding simultaneous engagement can no longer be supported.

Oberg's Machinery Handbook, 28th Edition, was published in 2008. The present application claims priority back to U.S. Provisional Application 61/601,809 filed February 22, 2012. Accordingly, Oberg's Machinery Handbook, 28th Edition, is prior art to the present application.

A Supplemental Information Disclosure Statement, form 1449, has been filed in conjunction with this correspondence to put the relevant excerpts from Oberg's Machinery Handbook, 28th Edition on file in this matter.

Express Abandonment

In view of the newly discovered reference material, the undersigned hereby expressly abandons the present application, Application Serial No. 15/397,959, titled "Bone Screw including a Dual Thread Closure Member" naming Jeremy J. Lemoine as the sole inventor. Accordingly, the undersigned respectfully requests that the present application be abandoned by the Office and that a Notice of Abandonment be issued in due course.

---

[1] *See e.g.*, Erik Oberg, et al., Machinery's Handbook, 1247-1250 (28th ed. 2008).
[2] Erik Oberg, et al., Machinery's Handbook, 1250 (28th ed. 2008).

CONCLUSION

It is respectfully submitted that the present application is hereby expressly abandoned and will be withdrawn from further consideration.

If necessary, please charge any additional fees or deficiencies, or credit any overpayments to Deposit Account No. 19-0743.

Respectfully submitted,

SCHWEGMAN LUNDBERG & WOESSNER, P.A.
P.O. Box 2938
Minneapolis, MN 55402-0938
612-373-6904

Date 1/28/2020 By

Gregory M. Stark
Reg. No. 62,731

UNITED STATES PATENT AND TRADEMARK OFFICE

UNITED STATES DEPARTMENT OF COMMERCE
United States Patent and Trademark Office
Address: COMMISSIONER FOR PATENTS
P.O. Box 1450
Alexandria, Virginia 22313-1450
www.uspto.gov

APPLICATION NO.	FILING DATE	FIRST NAMED INVENTOR	ATTORNEY DOCKET NO.	CONFIRMATION NO.
15/397,959	01/04/2017	Jeremy J. Lemoine	4394.G10US2	4957

104326 7590 02/03/2020
Schwegman Lundberg & Woessner / Zimmer
P.O. Box 2938
Minneapolis, MN 55402

EXAMINER
COTRONEO, STEVEN J

ART UNIT	PAPER NUMBER
3773	

NOTIFICATION DATE	DELIVERY MODE
02/03/2020	ELECTRONIC

Please find below and/or attached an Office communication concerning this application or proceeding.

The time period for reply, if any, is set in the attached communication.

Notice of the Office communication was sent electronically on above-indicated "Notification Date" to the following e-mail address(es):

USPTO@slwip.com
SLW@blackhillsip.com

PTOL-90A (Rev. 04/07)

Notice of Abandonment	Application No. 15397959	Applicant(s)	
	Examiner	Art Unit	

-- The MAILING DATE of this communication appears on the cover sheet with the correspondence address--

This application is abandoned in view of:

1. ☐ Applicant's failure to timely file a proper reply to the Office letter mailed on _____.
   (a) ☐ A reply was received on _____ (with a Certificate of Mailing or Transmission dated _____), which is after the expiration of the period for reply (including a total extension of time of _____ month(s)) which expired on _____.
   (b) ☐ A proposed reply was received on _____, but it does not constitute a proper reply under 37 CFR 1.113 (a) to the final rejection.
   (A proper reply under 37 CFR 1.113 to a final rejection consists only of: (1) a timely filed amendment which places the application in condition for allowance; (2) a timely filed Notice of Appeal (with appeal fee); or (3) a timely filed Request for Continued Examination (RCE) in compliance with 37 CFR 1.114).
   (c) ☐ A reply was received on _____ but it does not constitute a proper reply, or a bona fide attempt at a proper reply, to the non-final rejection. See 37 CFR 1.85(a) and 1.111. (See explanation in box 7 below).
   (d) ☐ No reply has been received.

2. ☐ Applicant's failure to timely pay the required issue fee and publication fee, if applicable, within the statutory period of three months from the mailing date of the Notice of Allowance (PTOL-85).
   (a) ☐ The issue fee and publication fee, if applicable, was received on _____ (with a Certificate of Mailing or Transmission dated _____), which is after the expiration of the statutory period for payment of the issue fee (and publication fee) set in the Notice of Allowance (PTOL-85).
   (b) ☐ The submitted fee of $_____ is insufficient. A balance of $_____ is due.
   The issue fee required by 37 CFR 1.18 is $_____. The publication fee, if required by 37 CFR 1.18(d), is $_____.
   (c) ☐ The issue fee and publication fee, if applicable, has not been received.

3. ☐ Applicant's failure to timely file corrected drawings as required by, and within the three-month period set in, the Notice of Allowability (PTO-37).
   (a) ☐ Proposed corrected drawings were received on _____ (with a Certificate of Mailing or Transmission dated _____), which is after the expiration of the period for reply.
   (b) ☐ No corrected drawings have been received.

4. ☒ The letter of express abandonment which is signed by the attorney or agent of record, the assignee of the entire interest, or all of the applicants.

5. ☐ The letter of express abandonment which is signed by an attorney or agent (acting in a representative capacity under 37 CFR 1.34(a)) upon the filing of a continuing application.

6. ☐ The decision by the Board of Patent Appeals and Interference rendered on _____ and because the period for seeking court review of the decision has expired and there are no allowed claims.

7. ☐ The reason(s) below:

SABA/ GHEBREMICHAEL

Petitions to revive under 37 CFR 1.137(a) or (b), or requests to withdraw the holding of abandonment under 37 CFR 1.181, should be promptly filed to minimize any negative effects on patent term.