US007854751B2

(12) **United States Patent**
Sicvol et al.

(10) **Patent No.: US 7,854,751 B2**
(45) **Date of Patent: *Dec. 21, 2010**

(54) **PERCUTANEOUS ACCESS DEVICES AND BONE ANCHOR ASSEMBLIES**

(75) Inventors: **Christopher Sicvol**, Boston, MA (US); **Erasmo Lopez**, Seattle, WA (US); **Ramon Ruberte**, Ann Arbor, MI (US)

(73) Assignee: **Dupuy Spine, Inc.**, Raynham, MA (US)

(*) Notice: Subject to any disclaimer, the term of this patent is extended or adjusted under 35 U.S.C. 154(b) by 82 days.

This patent is subject to a terminal disclaimer.

(21) Appl. No.: **11/692,531**

(22) Filed: **Mar. 28, 2007**

(65) **Prior Publication Data**

US 2007/0167954 A1 Jul. 19, 2007

Related U.S. Application Data

(63) Continuation of application No. 11/672,539, filed on Feb. 8, 2007, now abandoned, which is a continuation of application No. 10/738,286, filed on Dec. 16, 2003, now Pat. No. 7,179,261.

(51) **Int. Cl.**
A61B 17/70 (2006.01)

(52) **U.S. Cl.** ..... **606/246**; 606/86 A

(58) **Field of Classification Search** ..... 606/96, 606/99, 104, 323, 86 A, 916, 246, 251, 252, 606/273–274, 276

See application file for complete search history.

(56) **References Cited**

U.S. PATENT DOCUMENTS

2,005,955	A	6/1935	Knox
2,248,054	A	7/1941	Becker
2,268,576	A	1/1942	Drewett
2,346,346	A	4/1944	Anderson
2,514,589	A	7/1950	Penman
2,684,168	A	7/1954	McGinnis et al.

(Continued)

FOREIGN PATENT DOCUMENTS

DE	26 49 042 B1	1/1978

(Continued)

OTHER PUBLICATIONS

"CD Horizon Legacy 5.5 Spinal System" Brochure, Medtronic Sofamor Danek, USA Inc., 2003.

(Continued)

Primary Examiner—Thomas C Barrett
Assistant Examiner—Nicholas Woodall

(57) **ABSTRACT**

A percutaneous access device includes an inner tube and an outer tube disposed about at least a portion of the inner tube. The outer tube may be sized to span from a skin incision in a patient to a site proximate the spine of the patient. The distal end of the outer tube may be adapted to releasably engage a bone anchor. The inner tube may be adjustable relative to the outer tube between a first position and a second position in which the distal end of the inner tube contacts the bone anchor. A bone anchor assembly includes a bone anchor having a distal bone engaging portion and a receiving member having a recess for receiving a spinal fixation element. The proximal end of the receiving member may have an arcuate groove formed on an exterior surface thereof to facilitate connection of an instrument to the receiving member.

8 Claims, 26 Drawing Sheets

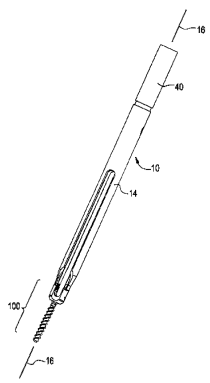

U.S. PATENT DOCUMENTS

3,224,799	A	12/1965	Blose et al.
3,997,138	A	12/1976	Crock et al.
4,041,636	A	8/1977	Folker
4,274,401	A	6/1981	Miskew
4,324,036	A	4/1982	Reilly
4,369,011	A	1/1983	Ploss
4,373,754	A	2/1983	Bollfrass et al.
4,382,438	A	5/1983	Jacobs
4,492,749	A	1/1985	Scheler
4,611,580	A	9/1986	Wu
4,763,644	A	8/1988	Webb
4,799,372	A	1/1989	Marcon et al.
4,815,453	A	3/1989	Cotrel
4,836,196	A	6/1989	Park et al.
4,848,368	A	7/1989	Kronner
4,851,453	A	7/1989	White et al.
4,864,614	A	9/1989	Crowther
4,887,596	A	12/1989	Sherman
4,913,134	A	4/1990	Luque
4,946,458	A	8/1990	Harms et al.
4,950,269	A	8/1990	Gaines, Jr.
5,005,562	A	4/1991	Cotrel
5,042,982	A	8/1991	Harms et al.
5,052,643	A	10/1991	Law
5,067,955	A	11/1991	Cotrel
5,092,635	A	3/1992	DeLange et al.
5,092,867	A	3/1992	Harms et al.
5,092,893	A	3/1992	Smith
5,129,388	A	7/1992	Vignaud et al.
5,154,719	A	10/1992	Cotrel
5,171,279	A	12/1992	Mathews
5,176,680	A	1/1993	Vignaud et al.
5,196,013	A	3/1993	Harms et al.
5,207,678	A	5/1993	Harms et al.
5,217,497	A	6/1993	Mehdian
5,242,446	A	9/1993	Steffee et al.
5,261,907	A	11/1993	Vignaud et al.
5,261,912	A	11/1993	Frigg
5,261,913	A	11/1993	Marnay
5,282,862	A	2/1994	Baker et al.
5,282,863	A	2/1994	Burton
5,352,231	A	10/1994	Brumfield et al.
5,360,431	A	11/1994	Puno et al.
5,385,583	A	1/1995	Cotrel
5,397,363	A	3/1995	Gelbard
5,429,639	A	7/1995	Judet
5,443,467	A	8/1995	Biedermann et al.
5,466,237	A	11/1995	Byrd, III et al.
5,468,241	A	11/1995	Metz-Stavenhagen et al.
5,474,555	A	12/1995	Puno et al.
5,496,321	A	3/1996	Puno et al.
5,520,689	A	5/1996	Schlapfer et al.
5,536,268	A	7/1996	Griss
5,545,165	A	8/1996	Biedermann et al.
5,554,157	A	9/1996	Errrico et al.
5,569,248	A	10/1996	Mathews
5,584,887	A	12/1996	Kambin
5,586,984	A	12/1996	Errico et al.
5,605,457	A	2/1997	Bailey et al.
5,647,873	A	7/1997	Errico et al.
5,651,789	A	7/1997	Cotrel
5,667,508	A	9/1997	Errico et al.
5,669,911	A	9/1997	Errico et al.
5,672,176	A	9/1997	Biedermann et al.
5,680,963	A	10/1997	Brusko
5,683,390	A	11/1997	Metz-Stavenhagen et al.
5,683,391	A	11/1997	Boyd
5,690,630	A	11/1997	Errico et al.
5,716,356	A	2/1998	Biedermann et al.
5,725,527	A	3/1998	Biedermann et al.
5,733,286	A	3/1998	Errico et al.
5,738,685	A	4/1998	Halm et al.
5,782,833	A	7/1998	Haider
5,788,097	A	8/1998	McInnes
5,797,911	A	8/1998	Sherman et al.
5,810,818	A	9/1998	Errico
5,817,094	A	10/1998	Errico et al.
5,858,020	A	1/1999	Johnson et al.
5,863,293	A	1/1999	Richelsoph
5,873,878	A	2/1999	Harms et al.
5,879,350	A	3/1999	Shermann et al.
5,882,350	A	3/1999	Ralph et al.
5,885,286	A	3/1999	Sherman et al.
5,888,221	A	3/1999	Gelbard
5,891,145	A	4/1999	Morrison et al.
5,899,901	A	5/1999	Middleton
5,899,904	A	5/1999	Errico
5,899,905	A	5/1999	Errico et al.
5,925,047	A	7/1999	Errico et al.
5,947,969	A	9/1999	Errico et al.
5,961,266	A	10/1999	Tsenge
5,964,760	A	10/1999	Richelsoph
5,976,146	A	11/1999	Ogawa
5,984,922	A	11/1999	McKay
5,984,923	A	11/1999	Breard
5,989,254	A	11/1999	Katz
6,004,349	A	12/1999	Jackson
6,010,503	A	1/2000	Richelsoph
6,033,406	A	3/2000	Mathews
6,053,917	A	4/2000	Sherman et al.
6,056,753	A	5/2000	Jackson
6,059,786	A	5/2000	Jackson
6,074,391	A	6/2000	Metz-Stavenhagen et al.
6,077,262	A	6/2000	Schlapfer et al.
6,083,225	A	7/2000	Winslow et al.
6,083,227	A	7/2000	Saurat et al.
6,090,110	A	7/2000	Metz-Stravenhagen
6,090,111	A	7/2000	Nichols
6,099,528	A	8/2000	Saurat
6,102,912	A	8/2000	Cazin et al.
6,102,913	A	8/2000	Jackson
6,113,602	A	9/2000	Sand
6,120,760	A	9/2000	Hotten et al.
6,132,431	A	10/2000	Nilsson et al.
6,132,432	A	10/2000	Richelsoph
6,139,549	A *	10/2000	Keller ..... 606/86 A
6,139,551	A	10/2000	Michelson et al.
6,183,472	B1	2/2001	Lutz
RE37,161	E	5/2001	Michelson et al.
6,224,598	B1	5/2001	Jackson
6,235,028	B1	5/2001	Brumfield et al.
6,251,112	B1	6/2001	Jackson
6,254,602	B1	7/2001	Justis
6,258,090	B1	7/2001	Jackson
6,261,287	B1	7/2001	Metz-Stavenhagen
6,280,442	B1	8/2001	Barker et al.
6,296,642	B1	10/2001	Morrison et al.
6,299,616	B1	10/2001	Beger
6,302,633	B1	10/2001	Poe
6,315,564	B1	11/2001	Levisman
6,331,179	B1	12/2001	Freid et al.
6,355,040	B1	3/2002	Richelsoph et al.
6,358,254	B1	3/2002	Anderson
6,361,535	B2	3/2002	Jackson
6,368,321	B1	4/2002	Jackson
6,371,989	B1	4/2002	Chauvin et al.
6,379,356	B1	4/2002	Jackson
6,387,097	B1	5/2002	Alby
6,416,515	B1	7/2002	Wagner
6,428,541	B1	8/2002	Boyd
6,440,132	B1	8/2002	Jackson
6,440,133	B1	8/2002	Beale et al.
6,440,137	B1	8/2002	Horvath et al.
6,443,953	B1	9/2002	Perra et al.

6,454,768	B1	9/2002	Jackson
6,454,772	B1	9/2002	Jackson
6,458,131	B1	10/2002	Ray
6,458,132	B2	10/2002	Choi
6,468,276	B1	10/2002	McKay
6,471,705	B1	10/2002	Biedermann et al.
6,475,218	B2	11/2002	Gournay et al.
6,485,220	B2	11/2002	Hecht
6,485,491	B1	11/2002	Farris et al.
6,485,518	B1	11/2002	Cornwall et al.
6,487,798	B2	12/2002	Seushige
6,488,681	B2	12/2002	Martin et al.
6,488,682	B2	12/2002	Kikuchi et al.
6,488,683	B2	12/2002	Lieberman
6,520,990	B1	2/2003	Ray
6,524,315	B1	2/2003	Selvitelli et al.
6,530,028	B1	3/2003	Yokoyama
6,530,929	B1 *	3/2003	Justis et al. 606/103
6,537,276	B2	3/2003	Metz-Stavenhagen
6,540,748	B2	4/2003	Lombardo
6,540,749	B2	4/2003	Schafer et al.
6,554,831	B1	4/2003	Rivard
6,554,834	B1	4/2003	Crozet
6,641,586	B2	11/2003	Varieur
6,648,888	B1	11/2003	Shluzas
6,652,527	B2	11/2003	Zucherman
6,723,100	B2	4/2004	Biederamann et al.
6,726,689	B2	4/2004	Jackson
6,730,089	B2	5/2004	Jackson
6,755,829	B1	6/2004	Bono
6,793,656	B1	9/2004	Mathews
6,837,889	B2	1/2005	Shluzas
6,905,500	B2	6/2005	Jeon
6,911,030	B1	6/2005	Vanacker et al.
7,081,117	B2	7/2006	Bono
7,125,426	B2	10/2006	Moumene
7,156,850	B2	1/2007	Kim
7,179,261	B2	2/2007	Sicvol
7,250,052	B2 *	7/2007	Landry et al. ..... 606/86 A
7,527,638	B2	5/2009	Anderson
7,666,188	B2	2/2010	Anderson
2001/0001119	A1	5/2001	Lombardo
2001/0010000	A1	7/2001	Gertzben
2001/0023350	A1	9/2001	Choi
2001/0025180	A1	9/2001	Jackson
2001/0034521	A1	10/2001	Bailey
2002/0007183	A1	1/2002	Lee
2002/0010467	A1	1/2002	Cooper
2002/0013585	A1	1/2002	Gournay et al.
2002/0022842	A1	2/2002	Horvath et al.
2002/0026192	A1	2/2002	Schmiel
2002/0026193	A1	2/2002	Barker et al.
2002/0032443	A1	3/2002	Sherman
2002/0035366	A1	3/2002	Walden
2002/0040243	A1	4/2002	Attali
2002/0045898	A1	4/2002	Freid
2002/0049444	A1	4/2002	Knox
2002/0055739	A1	5/2002	Lieberman
2002/0058942	A1	5/2002	Biedermann et al.
2002/0068938	A1	6/2002	Jackson
2002/0068940	A1	6/2002	Gaines
2002/0082602	A1	6/2002	Biedermann
2002/0091386	A1	7/2002	Martin
2002/0095153	A1	7/2002	Jones et al.
2002/0111626	A1	8/2002	Ralph et al.
2002/0111628	A1	8/2002	Ralph et al.
2002/0116000	A1	8/2002	Zucherman et al.
2002/0116001	A1	8/2002	Schafer
2002/0120272	A1	8/2002	Yuan et al.
2002/0133154	A1	9/2002	Saint Martin
2002/0138076	A1	9/2002	Biedermann et al.
2002/0138077	A1	9/2002	Ferree
2002/0143341	A1	10/2002	Biedermann et al.
2002/0161368	A1	10/2002	Foley et al.
2002/0169448	A1	11/2002	Vanacker
2002/0169450	A1	11/2002	Lange
2002/0173791	A1	11/2002	Howland
2002/0183747	A1	12/2002	Jao et al.
2002/0183748	A1	12/2002	Martin et al.
2002/0183749	A1	12/2002	Burgess et al.
2002/0188295	A1	12/2002	Martz
2003/0004511	A1	1/2003	Ferree
2003/0004512	A1	1/2003	Farris et al.
2003/0009168	A1	1/2003	Beale et al.
2003/0023240	A1	1/2003	Amrein et al.
2003/0023243	A1	1/2003	Biedermann et al.
2003/0028190	A1	2/2003	Patel
2003/0032957	A1	2/2003	McKinley
2003/0045875	A1	3/2003	Bertranov
2003/0045879	A1	3/2003	Minfelde et al.
2003/0050640	A1	3/2003	Lee et al.
2003/0055426	A1	3/2003	Carbone et al.
2003/0055427	A1	3/2003	Graf
2003/0060823	A1	3/2003	Bryan
2003/0060824	A1	3/2003	Viart
2003/0060826	A1	3/2003	Foley
2003/0083657	A1	5/2003	Drewry
2003/0100896	A1	5/2003	Biedermann et al.
2003/0100904	A1	5/2003	Biedermann
2003/0208203	A1	11/2003	Lim et al.
2003/0216748	A1	11/2003	Gitis
2003/0216768	A1	11/2003	Gitis
2003/0229347	A1	12/2003	Sherman
2004/0039384	A1	2/2004	Boehm et al.
2004/0138662	A1	7/2004	Landry
2004/0143265	A1	7/2004	Landry
2004/0181224	A1	9/2004	Biedermann
2004/0204711	A1	10/2004	Jackson
2004/0243139	A1	12/2004	Lewis
2005/0010221	A1	1/2005	Dalton
2005/0038432	A1	2/2005	Shaolian
2005/0065517	A1	3/2005	Chin
2005/0085813	A1	4/2005	Spitler
2005/0113832	A1	5/2005	Molz et al.
2005/0171540	A1	8/2005	Lim et al.
2005/0171549	A1	8/2005	Boehm et al.
2005/0192570	A1	9/2005	Jackson
2005/0192571	A1	9/2005	Abdelgany
2007/0129731	A1	6/2007	Sicvol

FOREIGN PATENT DOCUMENTS

DE	29 03 342	A1	7/1980
DE	3434807	A1	12/1985
DE	3639810	A1	5/1988
DE	3711013	C1	6/1988
DE	8915443.6		7/1990
DE	9006568.9		12/1990
DE	3916198	C2	7/1992
DE	430 7576		4/1994
DE	9403231.9		6/1994
DE	298 10 798	U1	12/1999
DE	199 12 364	A1	10/2000
DE	100 27 988	A1	1/2002
DE	101 36 129	A1	2/2003
DE	101 57 969	C1	2/2003
DE	199 12 364	B4	10/2004
EP	0242708	A2	4/1987
EP	0283373	A1	3/1988
EP	0346521		7/1988
EP	0328883	A2	1/1989
EP	0330881	A1	2/1989
EP	0348272		6/1989
EP	0379551		7/1989
EP	0392927		4/1990
EP	0452451		11/1990

EP	0441729		2/1991
EP	0465158		6/1991
EP	0528706		7/1992
EP	0572790		4/1993
EP	0324022		9/1993
EP	0614649		2/1994
EP	0771635		10/1996
EP	0836835	A2	10/1996
EP	0870474		7/1997
EP	1332722		5/1998
EP	1090595	A2	4/2001
EP	1133951	A2	3/2002
EP	1190678	A2	3/2002
EP	1332722	A1	8/2003
FR	2 624 720		12/1987
FR	2 659 546		3/1990
GB	522747		6/1940
JP	64 76847		3/1989
WO	WO 89 00028	A1	1/1989
WO	WO 90 00377	A1	1/1990
WO	WO 91 06254	A1	5/1991
WO	WO 91 16020	A1	10/1991
WO	WO 92 20294	A1	11/1992
WO	WO 93 11715	A1	6/1993
WO	WO 94 14384	A2	7/1994
WO	WO 95 01132	A1	1/1995
WO	WO 95 13755	A1	5/1995
WO	WO 95 13756	A1	5/1995
WO	WO 95 14437	A1	6/1995
WO	WO 98 12977	A1	4/1998
WO	WO 00 27297	A1	5/2000
WO	WO 01 01873	A1	1/2001
WO	WO 02069854		9/2002
WO	WO 2004 041100	A1	5/2004
WO	WO 2005 041799	A1	5/2005
WO	WO 2005041799		5/2005

OTHER PUBLICATIONS

John R. Walker, "Machining Fundamentals Fundamental Basic to Industry", The Goodheart-Wilcox Co., Inc., 1981, pp. 2,179-2,186, including redacted version.

Lascoe et al., "Machineshop—Operations and Setups", American Technical Society, 1973, pp. 380, 386 and 388 including redacted version.

Jeanneret, Posterior Rod System of the Cervical Spine: A New Implant Allowing Optimal Screw Insertion, Eur. Spine J 1996; pp. 350-356, 5(5):Springer-Verlag.

Kaneda et al; New Anterior Instrumentation For the Management of Thoracolumbar and Lumbar Scoliosis; Spine May 15, 1996; pp. 1250-1261; vol. 21(10).

Glazer et al.; Biomechanical analysis of Multilevel Fixation Methods in the Lumbar Spine; Spine Jan. 15, 1997; pp. 171-182;vol. 22(2).

Shapiro et al.; Spinal Instrumentation With a Low Complication Rate; Surg. Neurol. Dec. 1997; pp. 566-574; vol. 48(6) Elsevier Science.

Viau et al.; Thoracic Pedicle Screw Instrumentation Using the "Funnell Technique"; J. Spinal Discord Tech. Dec. 2002; pp. 450-453; vol. 15(6).

U&I Corporation Thoracolumbar Spine Optima Spinal System from website www.uandi.co.kr pp. 1-2 Nov. 10, 2005.

Ltr to Robert Malone from Dept of Health & Human Services, Jun. 20, 2002 regarding Forex Corporation OPTIMA™ Devices 510(k) Summary, 5 pages.

Ebara et al; A New System For the Anterio Restoration and Fixation of Thoracic Spinal Deformities Using an Andoscopic Approach; Spine Apr. 1, 2000;pp. 876-883; vol. 25(7).

XIA Spinal System Brochure, Stryker Howmedica Osteonics, pp. 1-7, Stryker Corporation, Rutherford, NJ. Jul. 1999.

OPTIMA Spinal System Surgical Technique Brochure, pp. 1-17, 2005.

* cited by examiner

FIG. 1

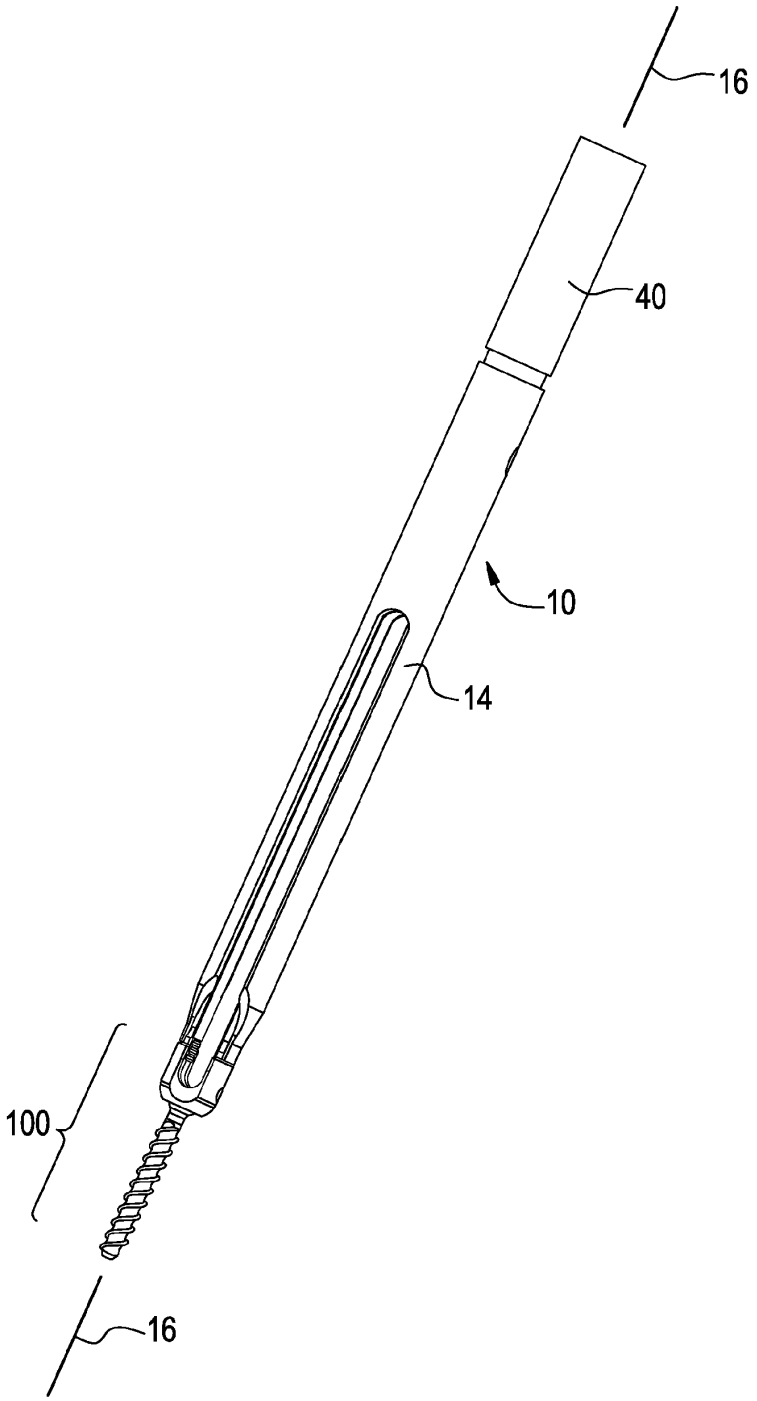

FIG. 2

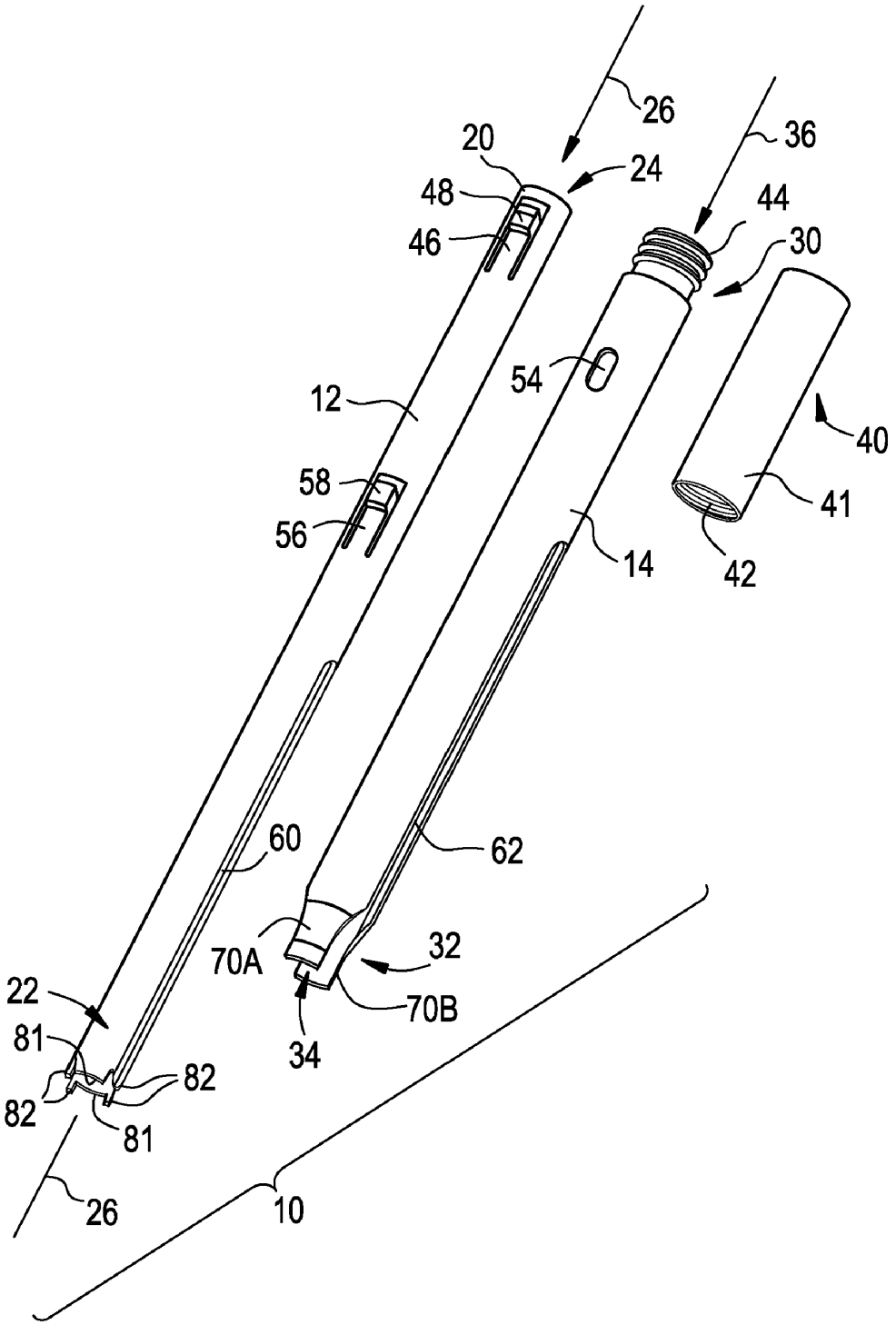
26
36
20
24
48
44
46
30
54
12
40
58
41
56
14
42
60
62
70A
32
22
70B
81
34
82
82
81
26
10

FIG. 3

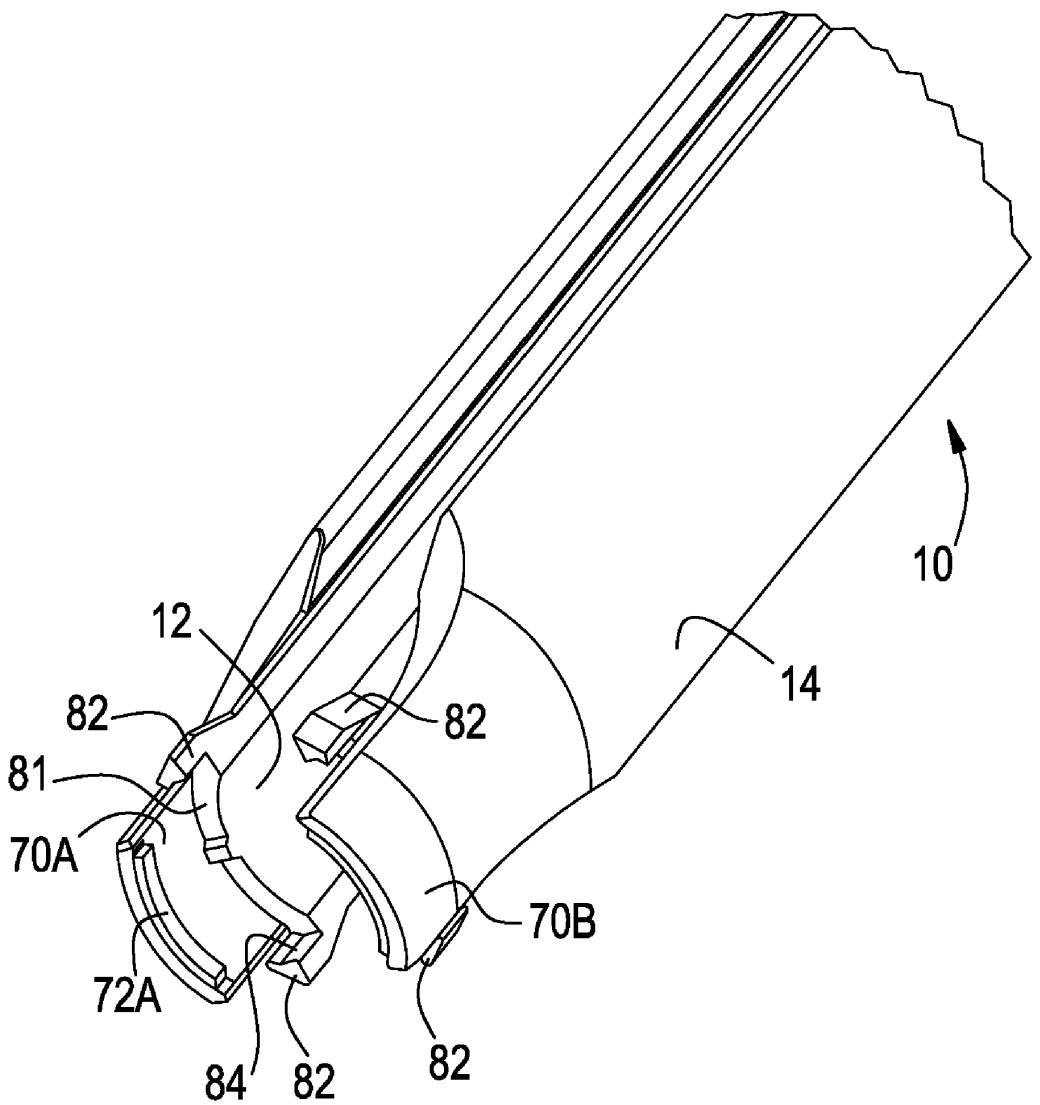

FIG. 4

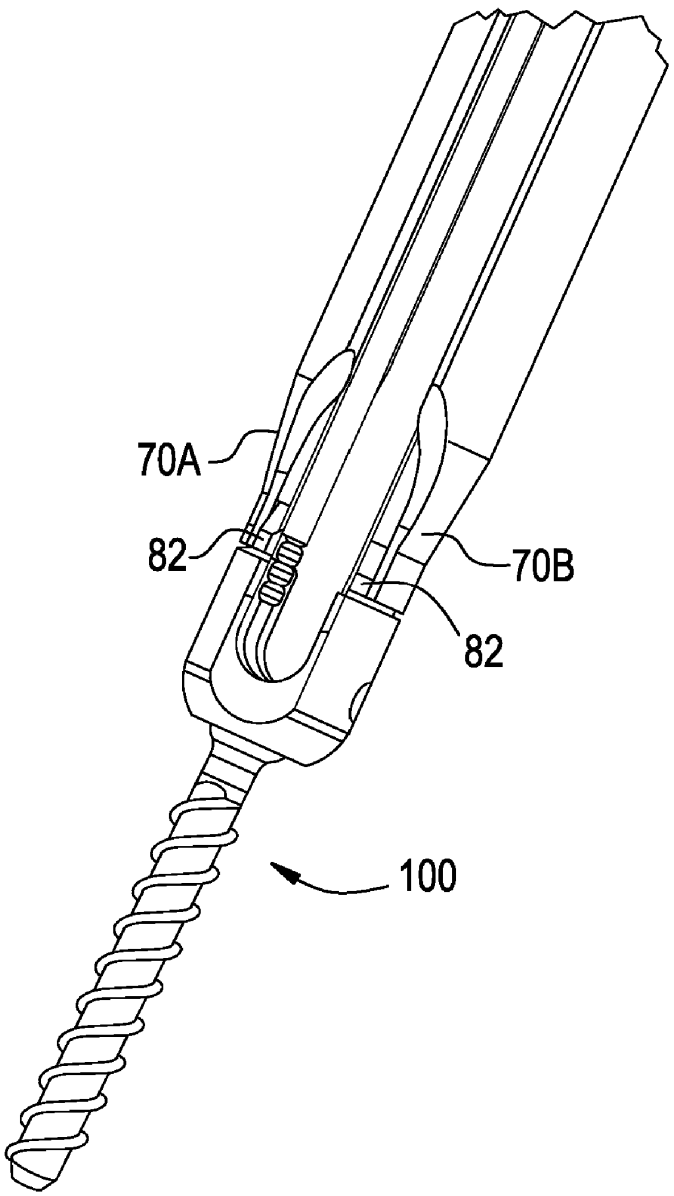

FIG. 5

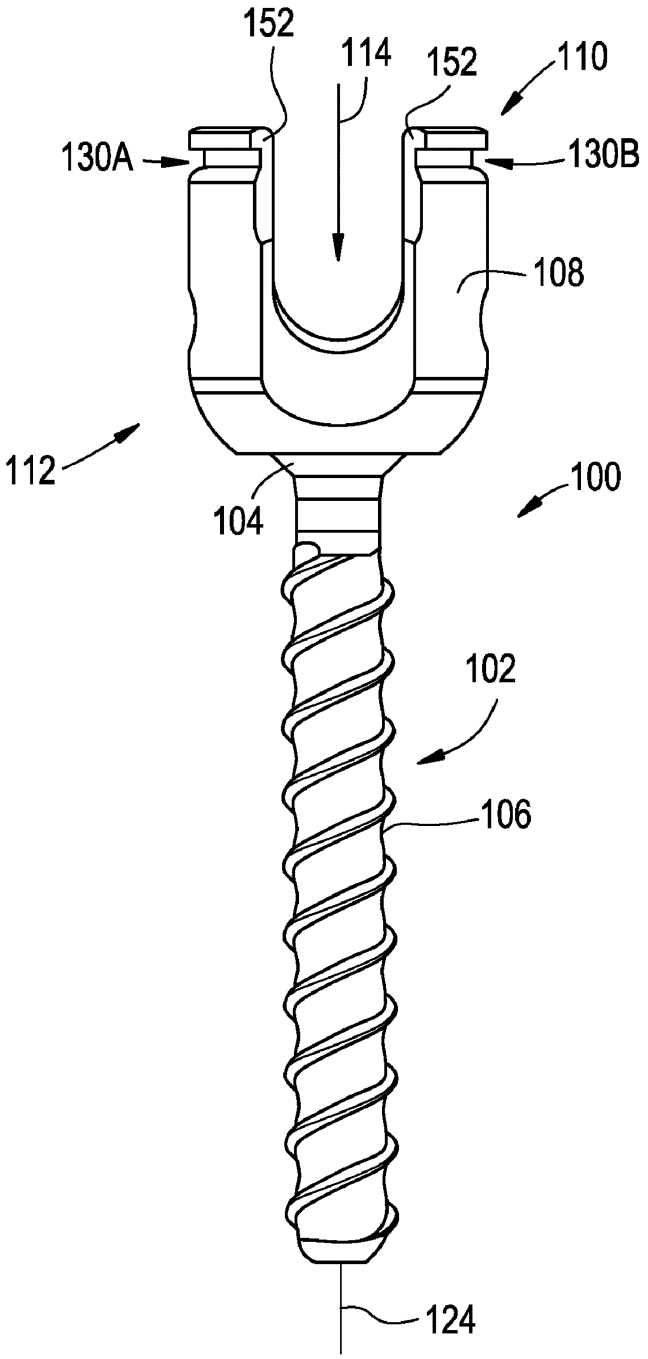

FIG. 6

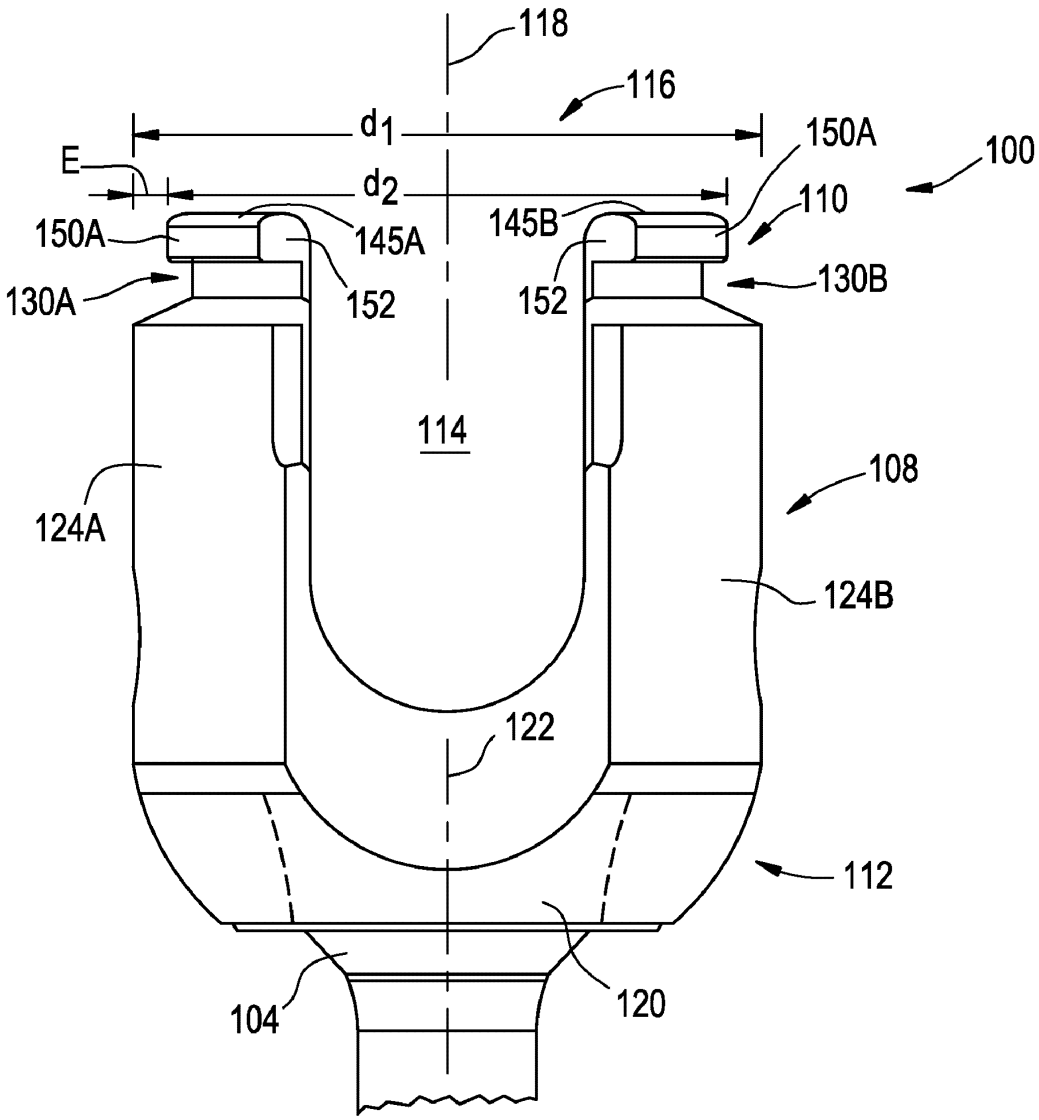
118
116
d1
150A
100
E
d2
110
150A
145A
145B
130A
152
152
130B
114
108
124A
124B
122
112
104
120

FIG. 7

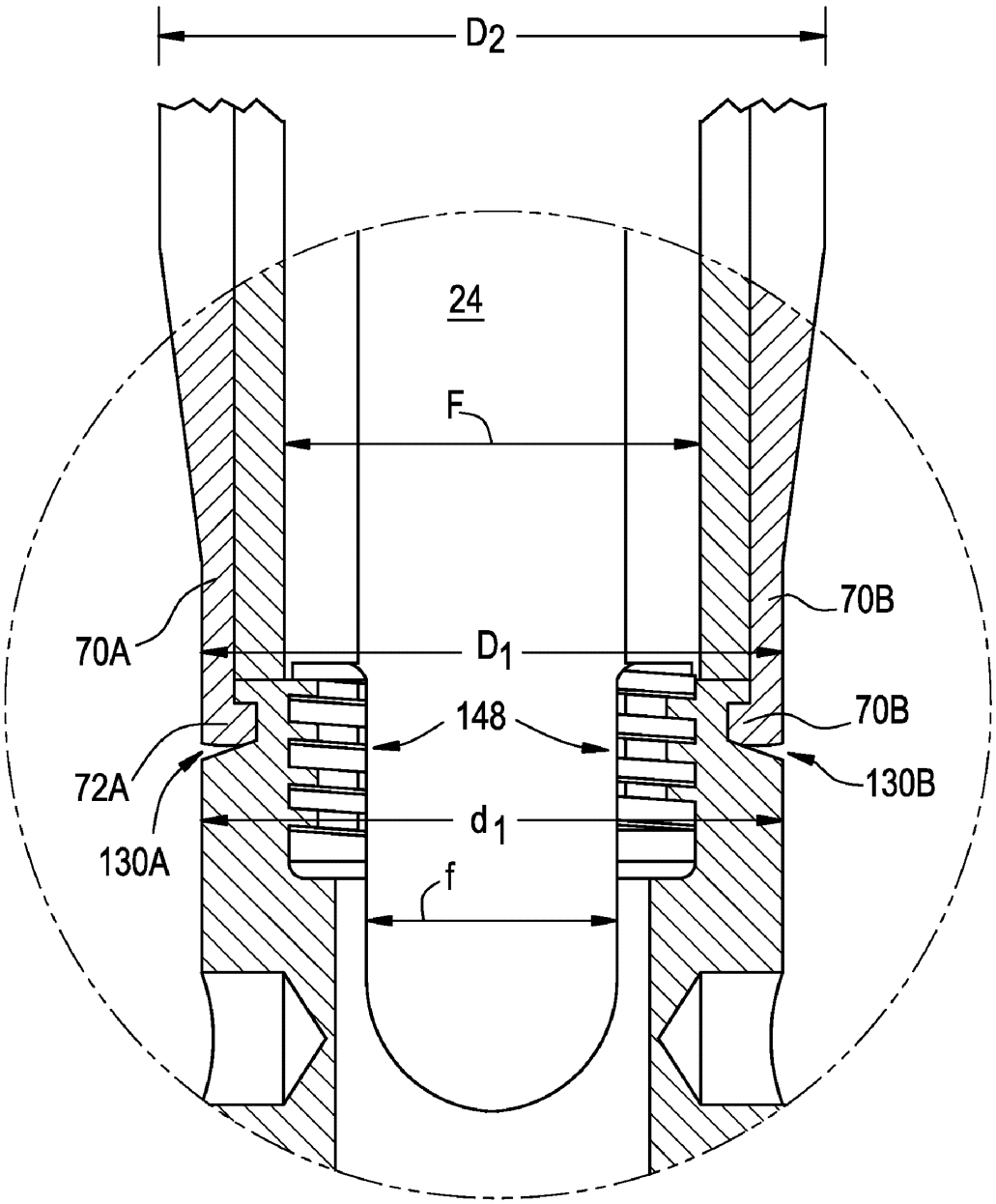

FIG. 8

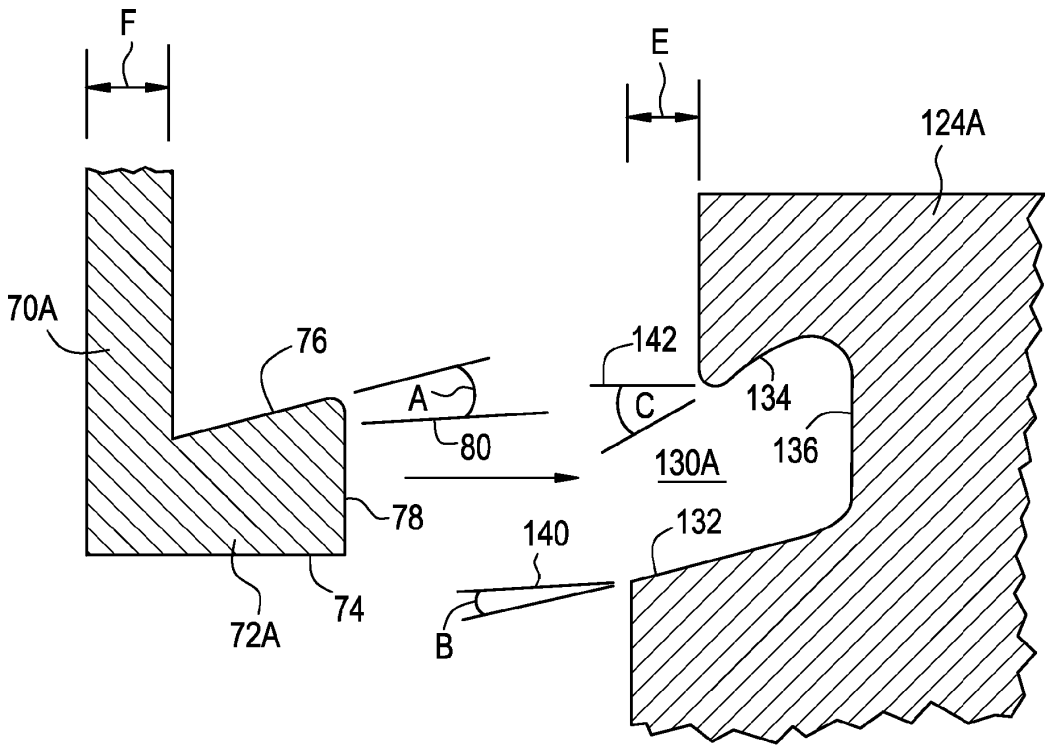

FIG. 9

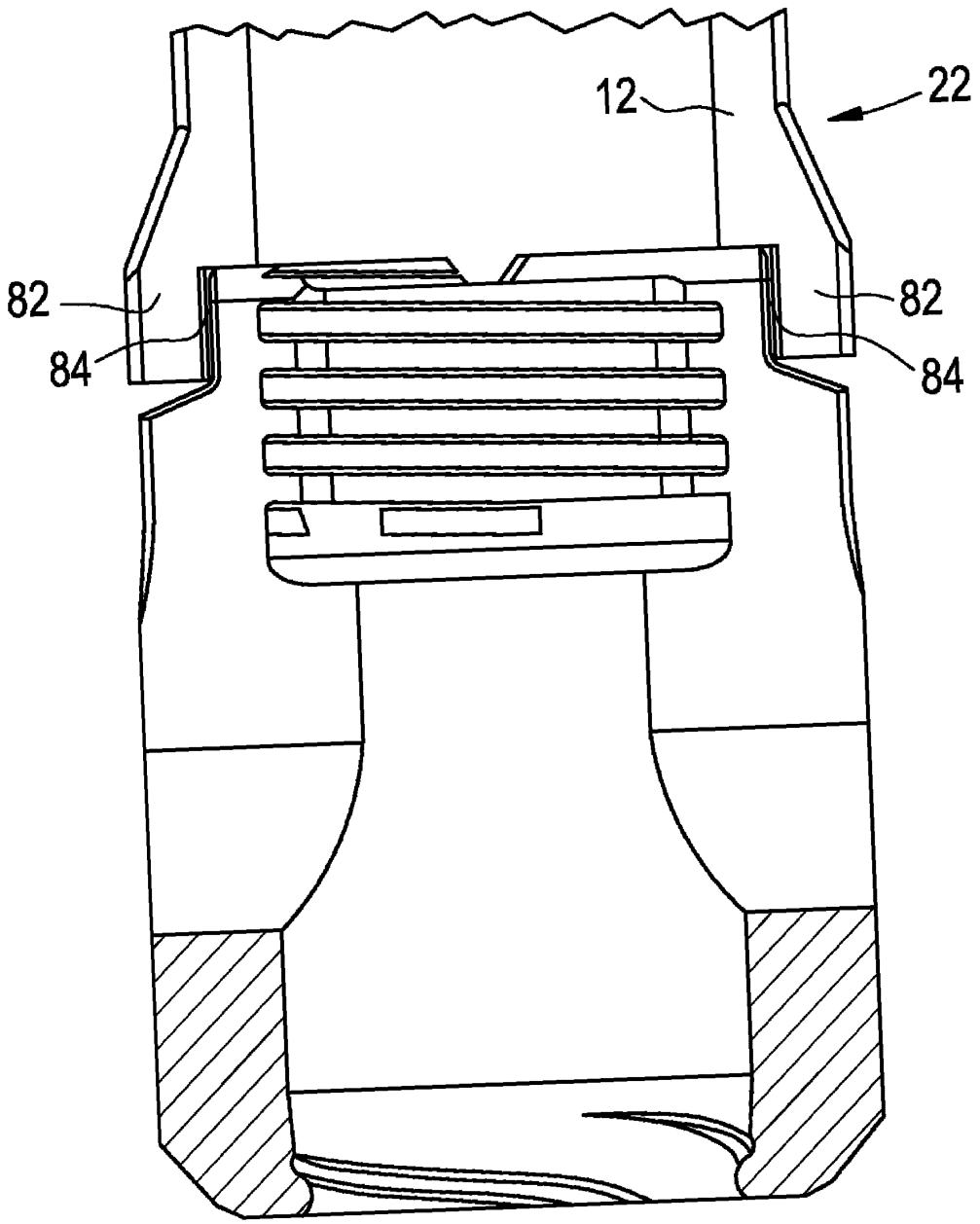

FIG. 10

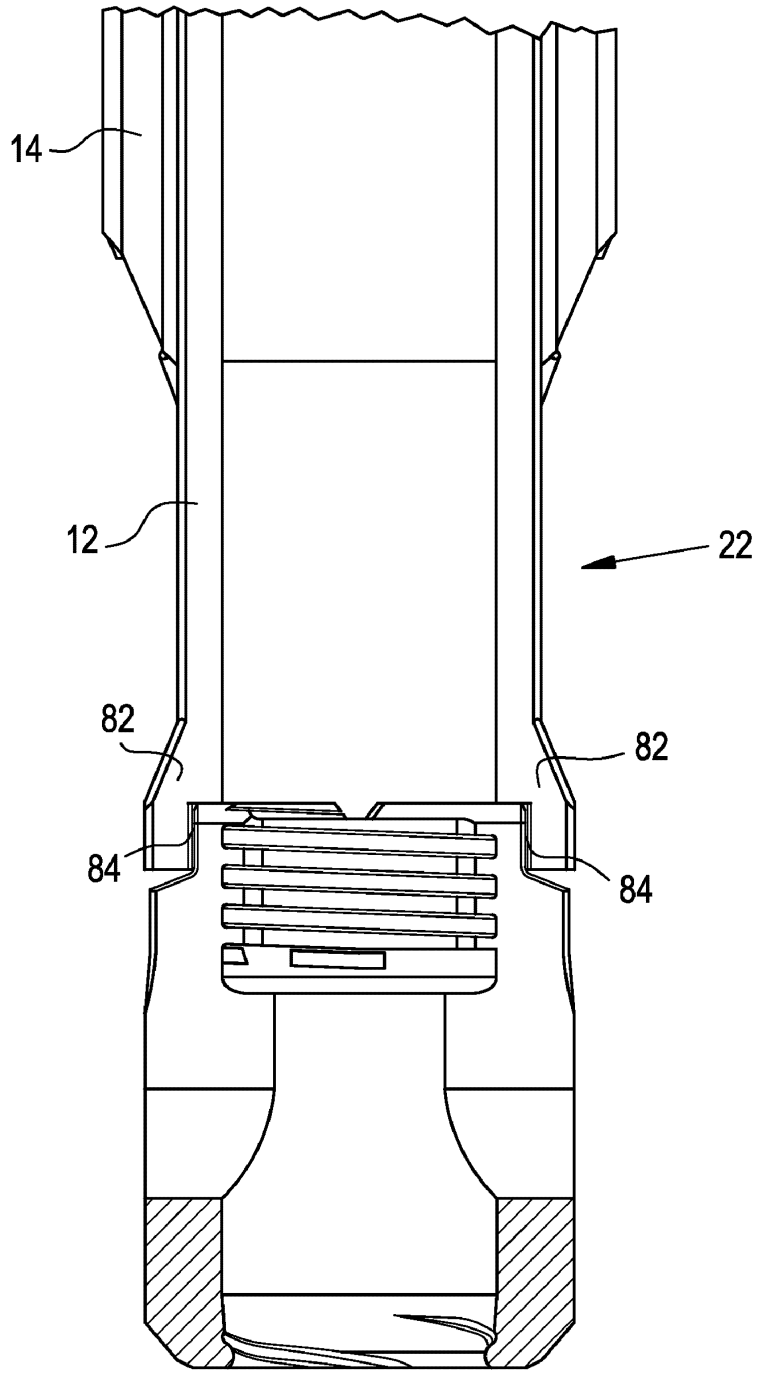

FIG. 11A

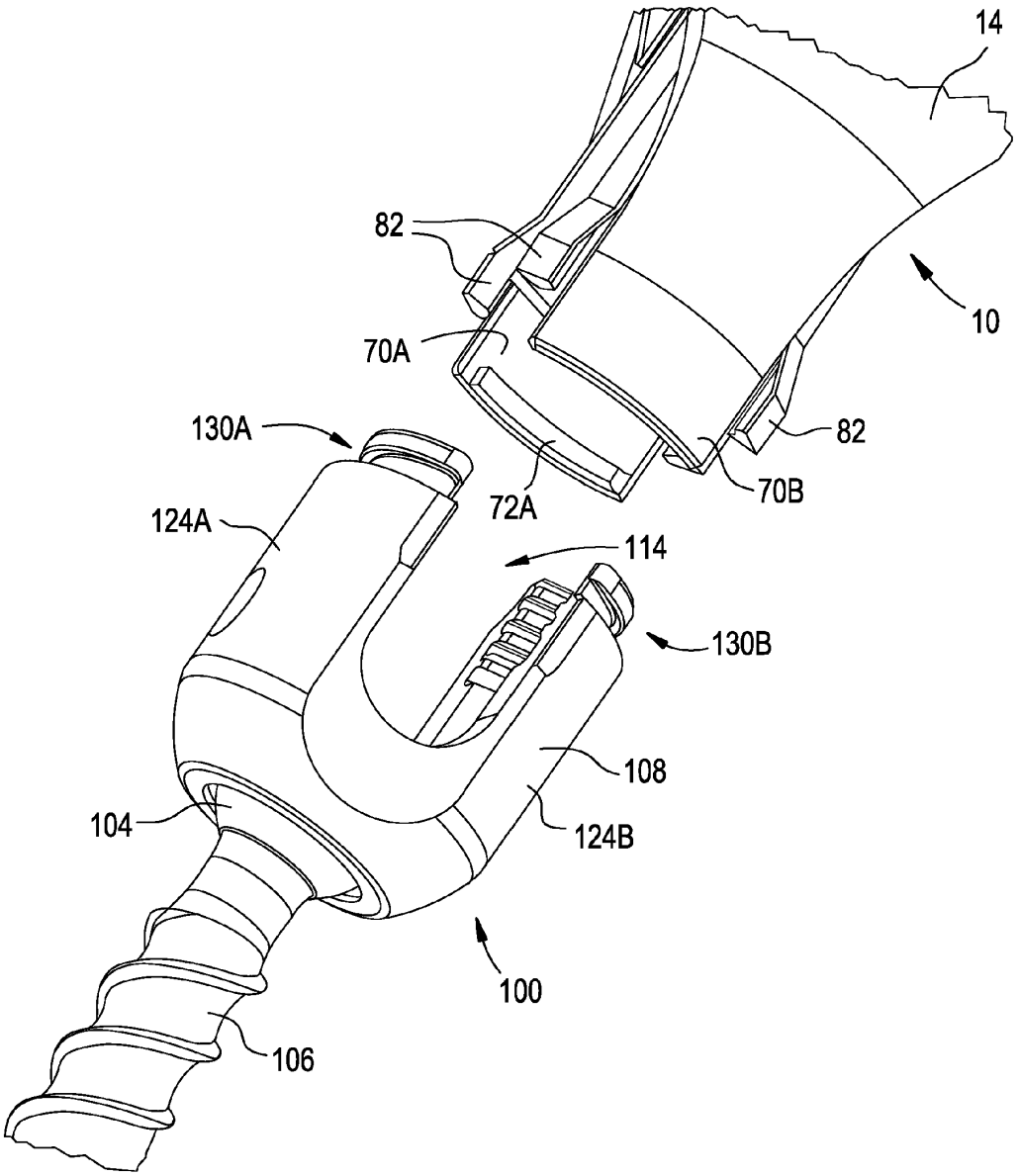

FIG. 11B

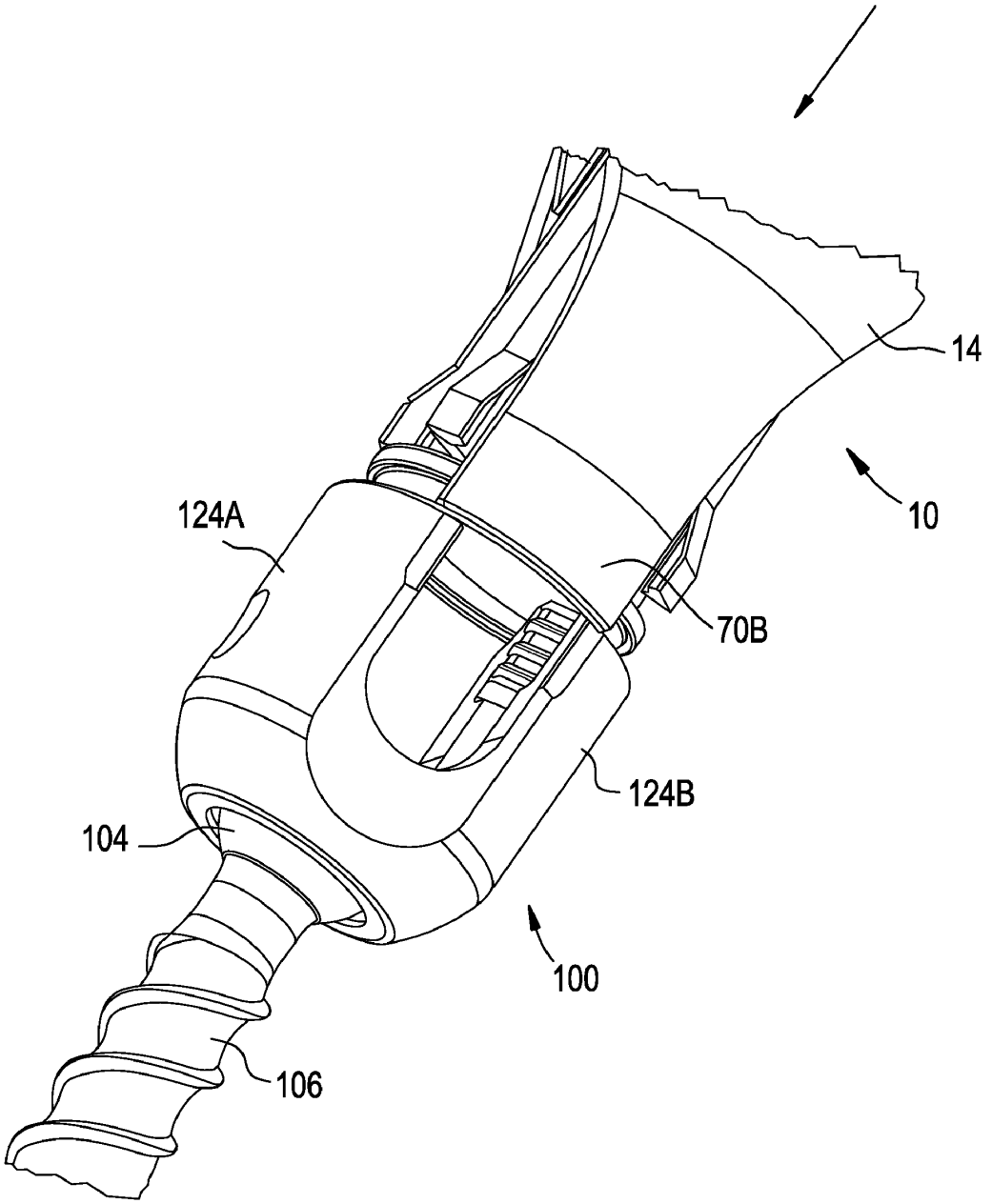

FIG. 11C

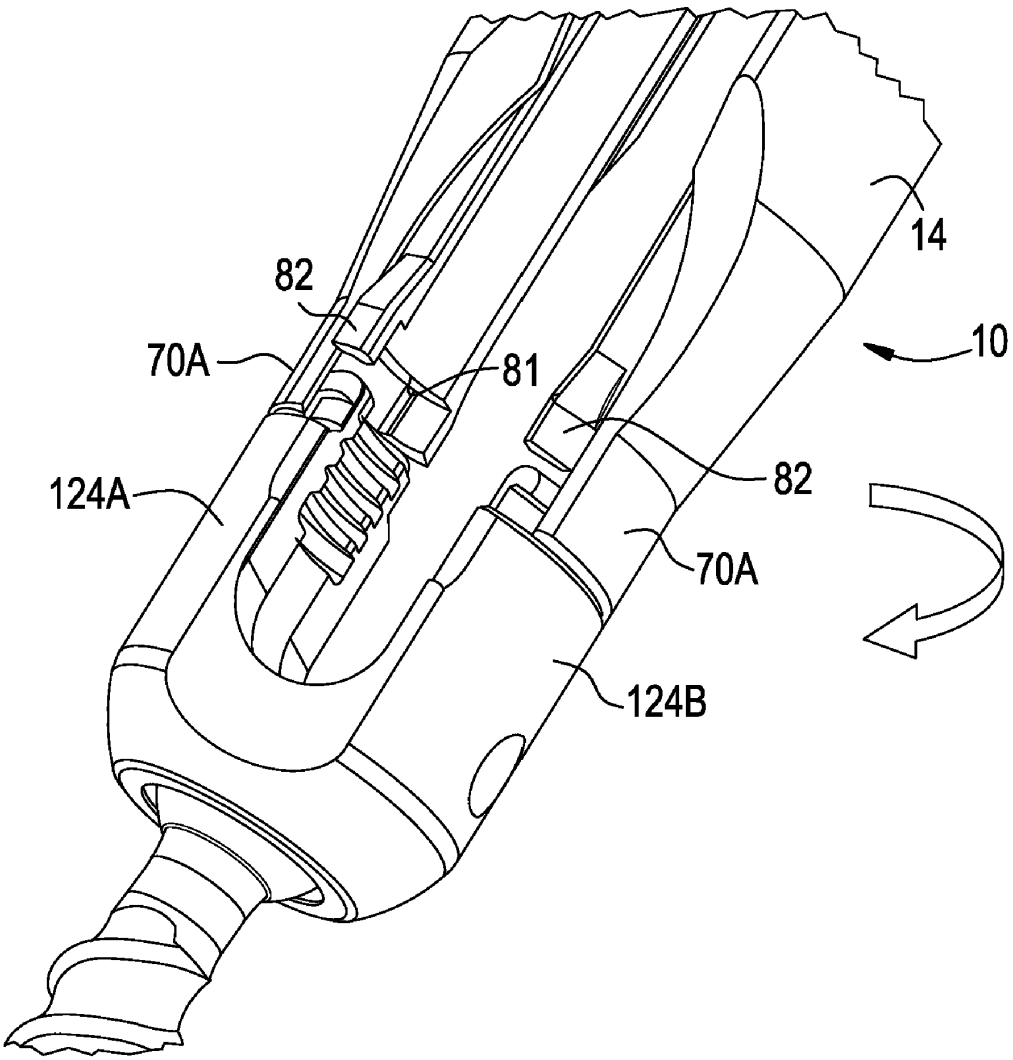

FIG. 11D

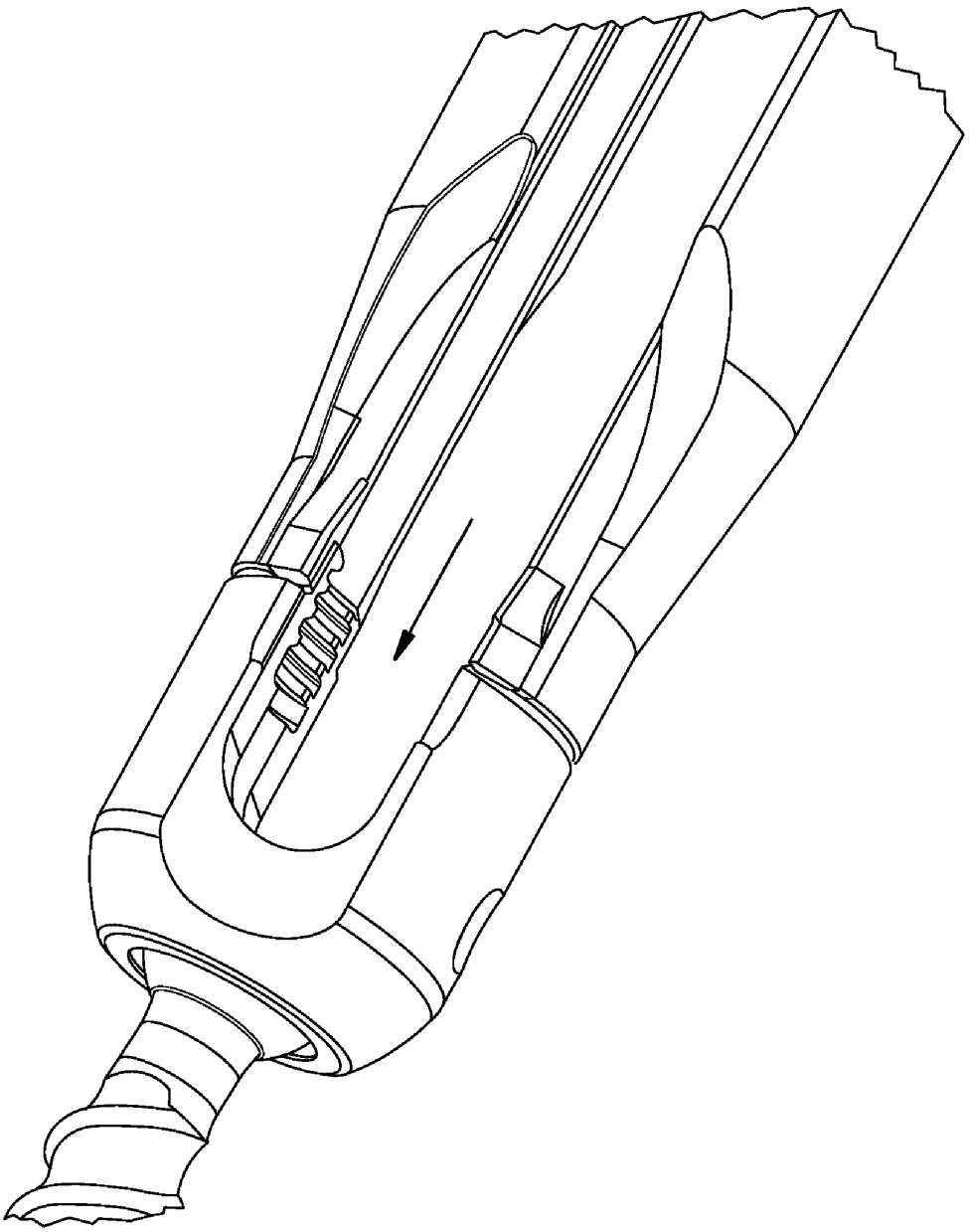

FIG. 12

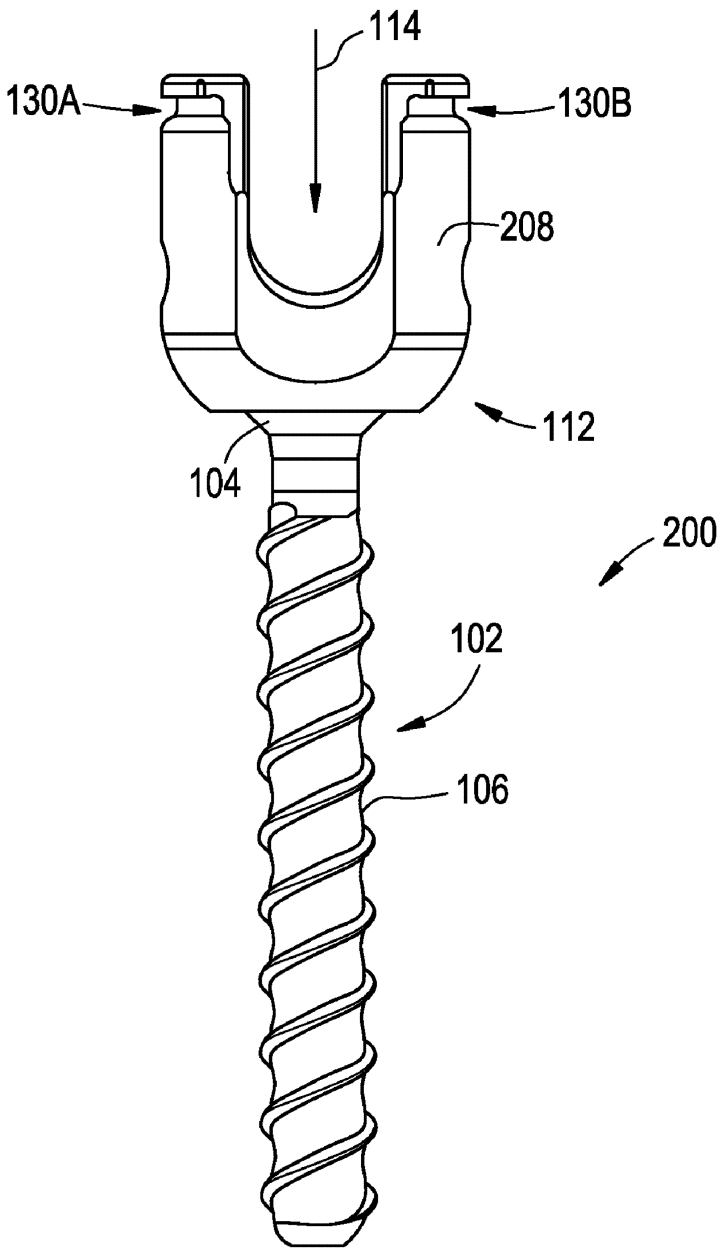

FIG. 13

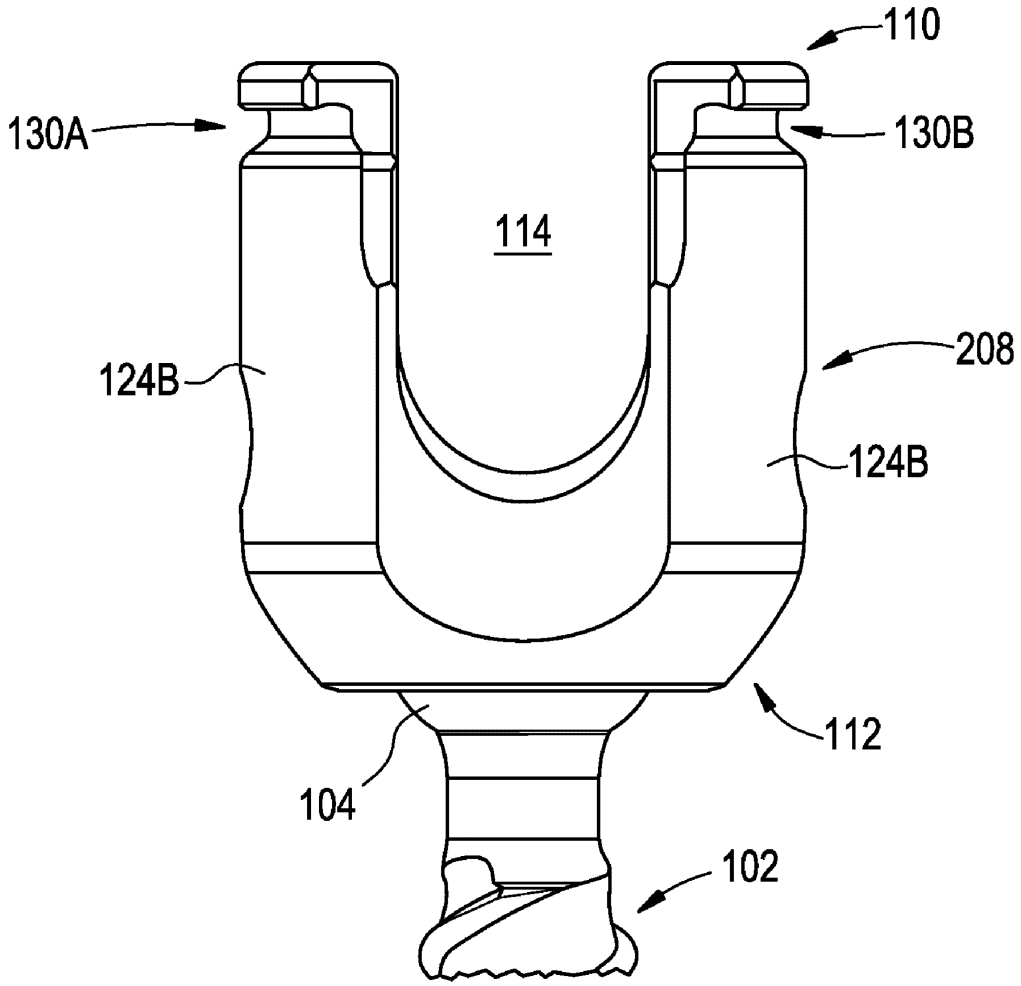

FIG. 14

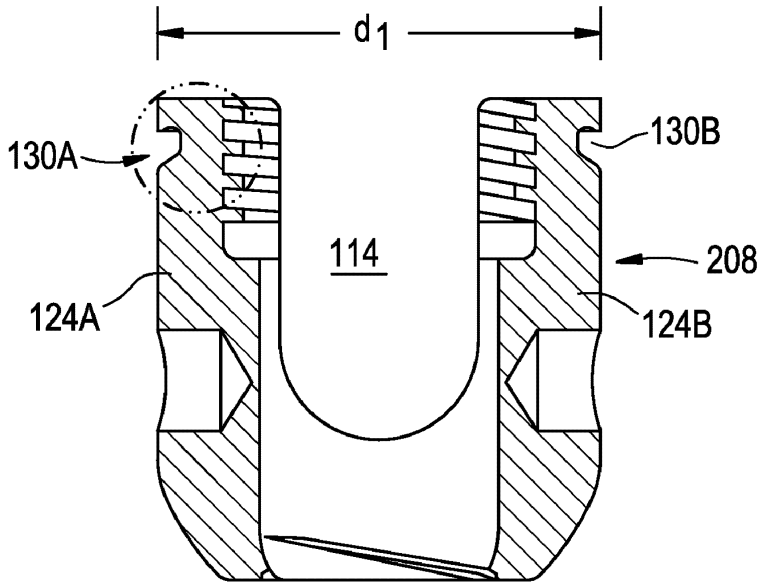

FIG. 15

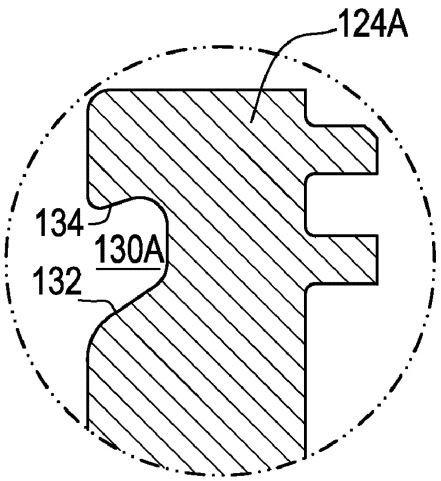

FIG. 16

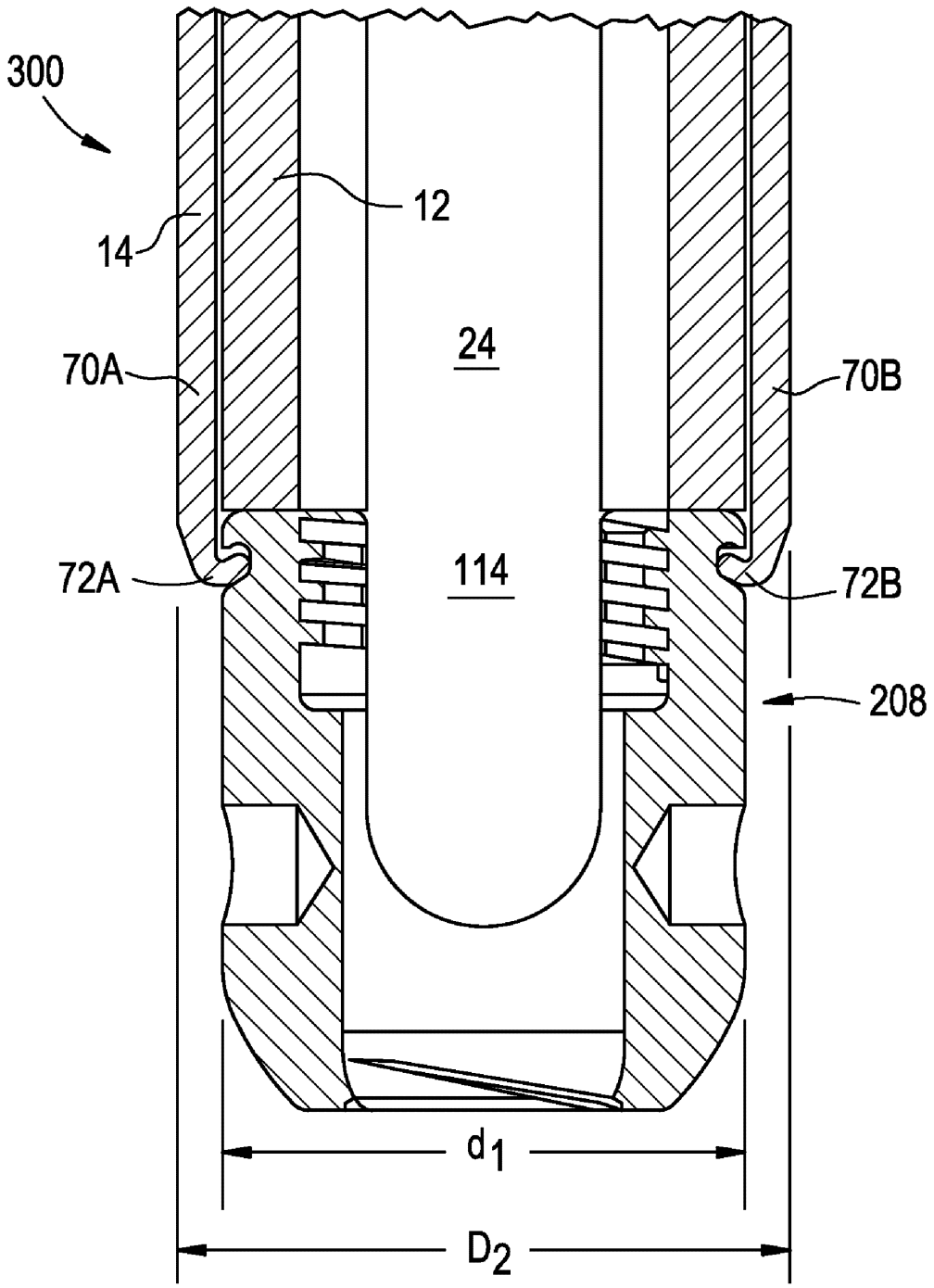

FIG. 17A

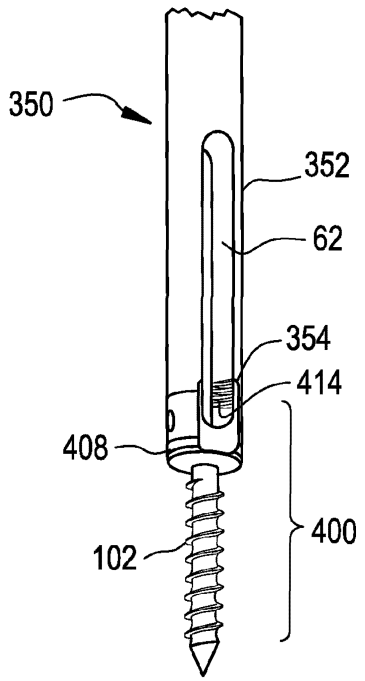

FIG. 17B

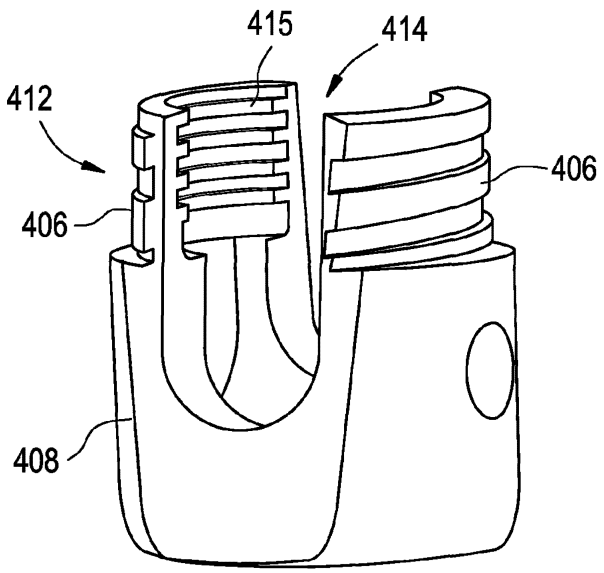

FIG. 18A

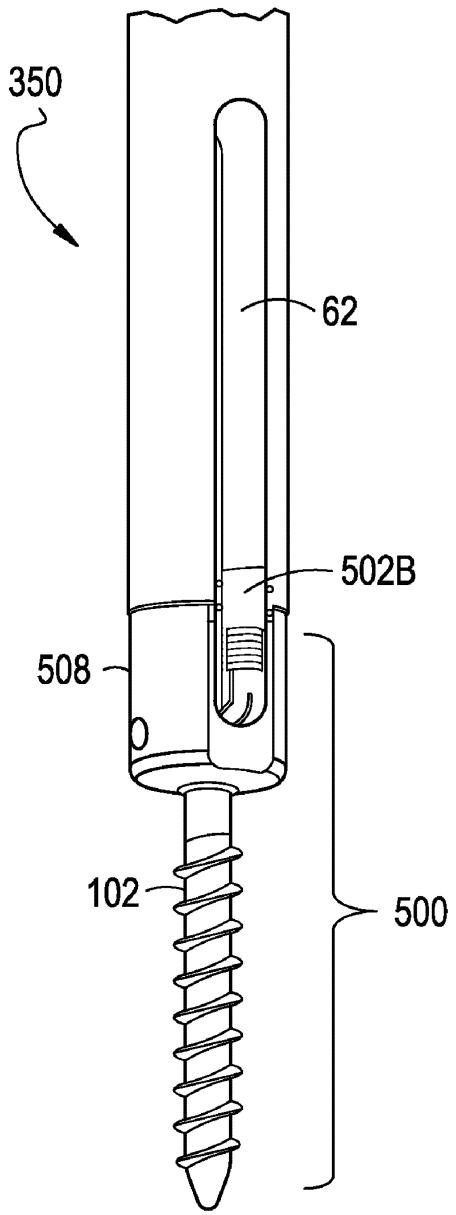

FIG. 18B

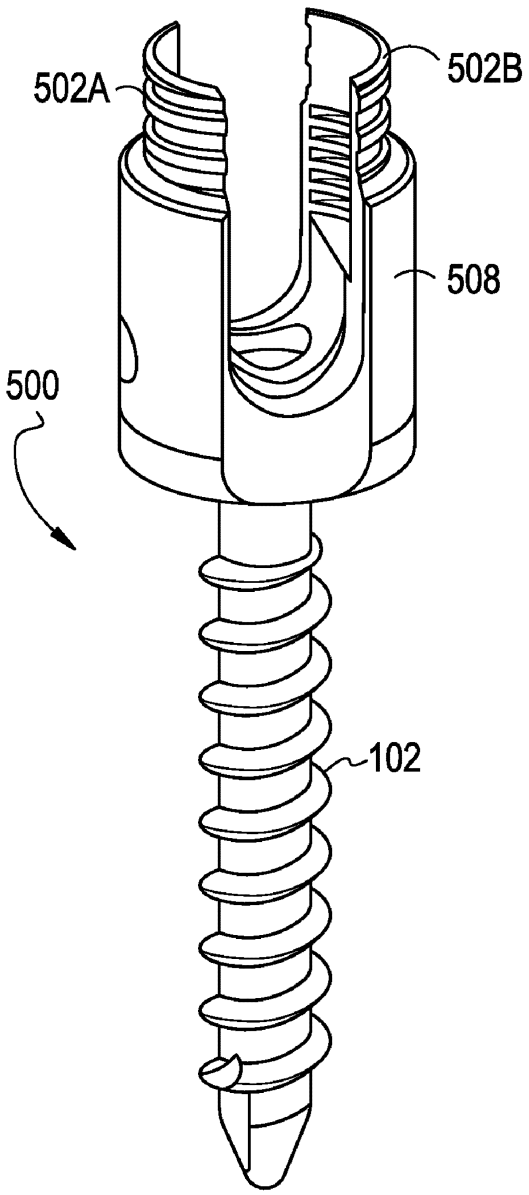

FIG. 19A

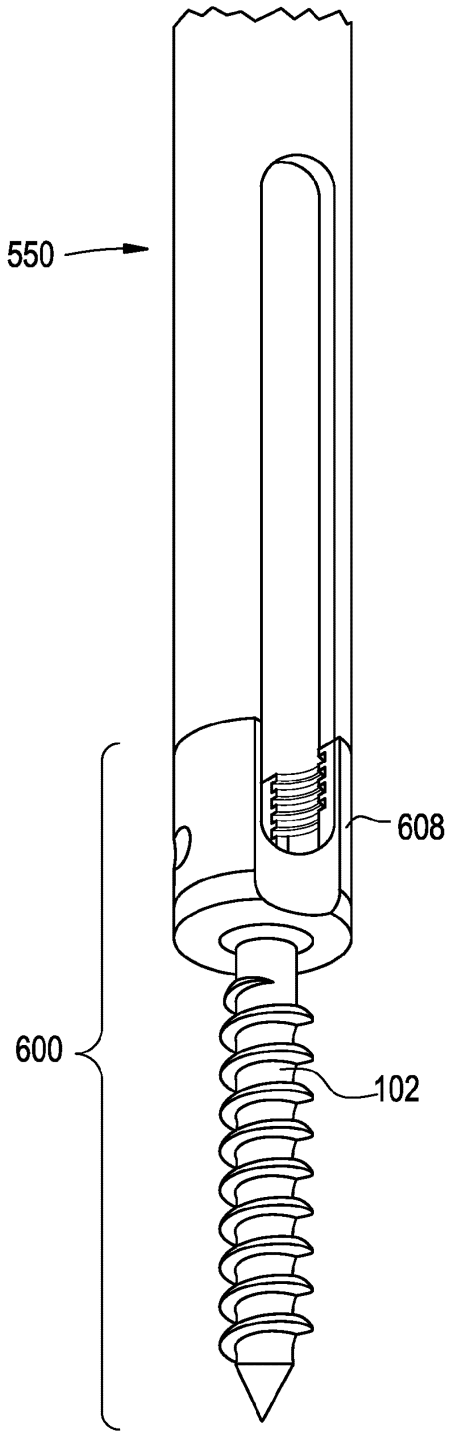

FIG. 19B

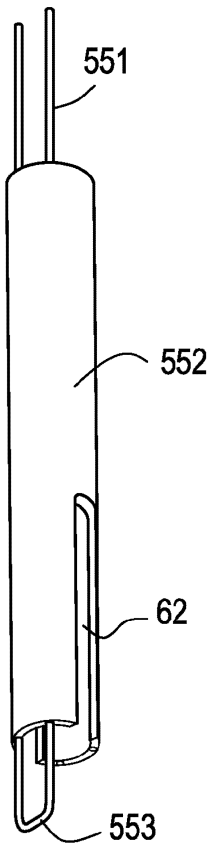

FIG. 19C

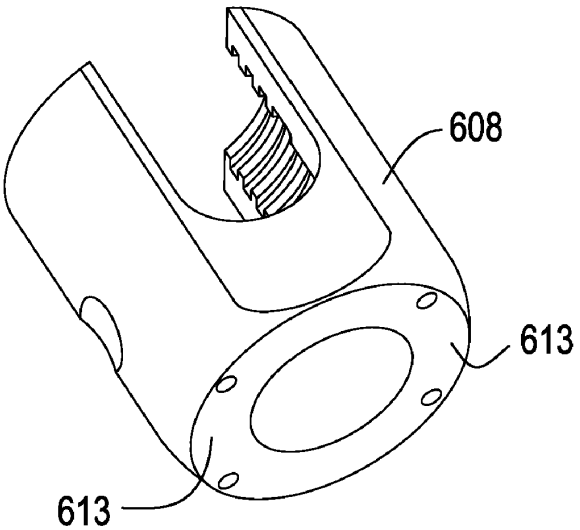

FIG. 19D

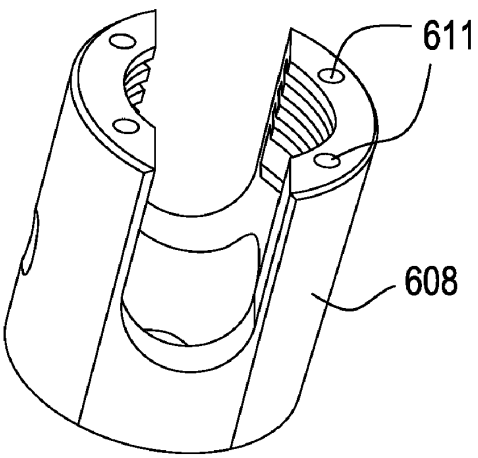

FIG. 20A

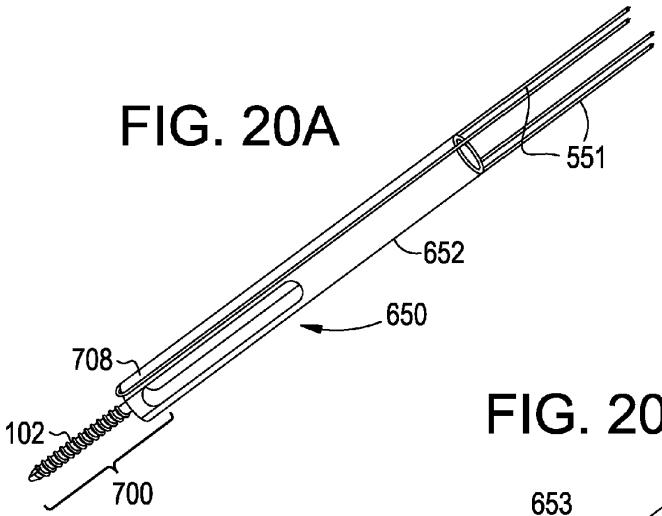

FIG. 20B

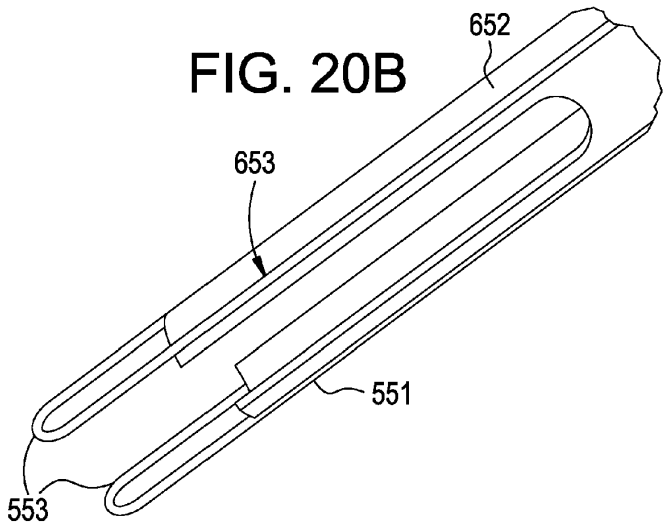

FIG. 20C

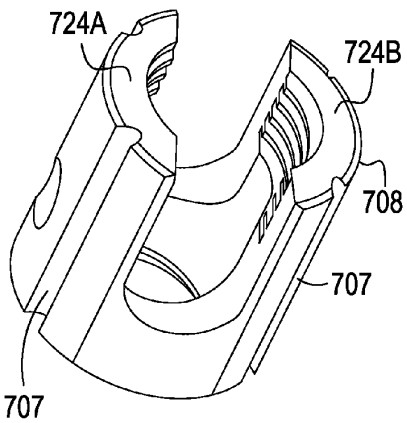

FIG. 20D

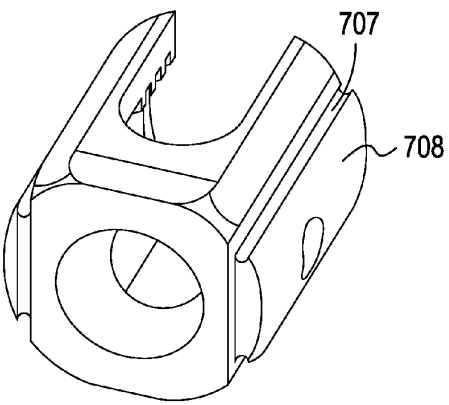

FIG. 21

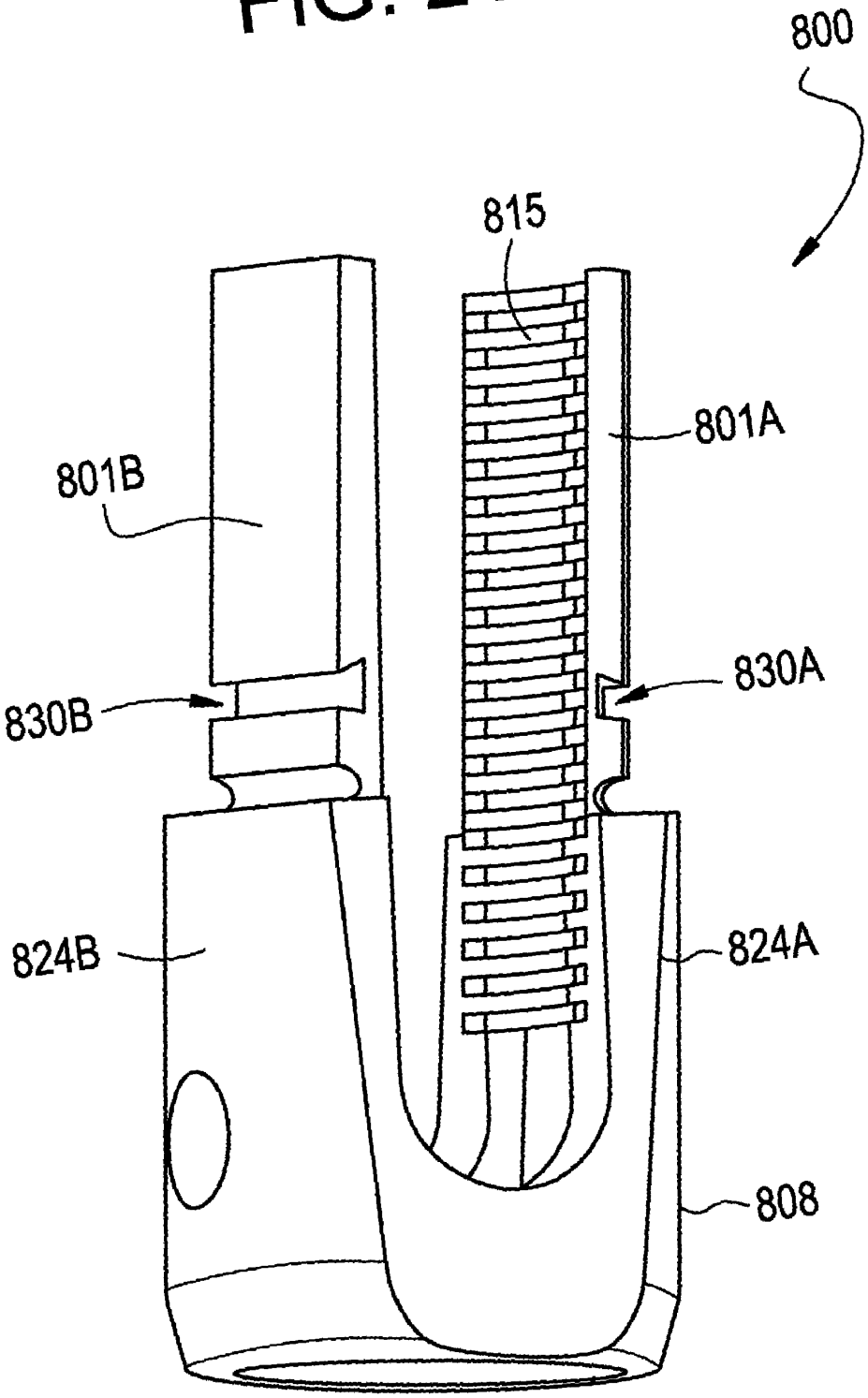

FIG. 22A

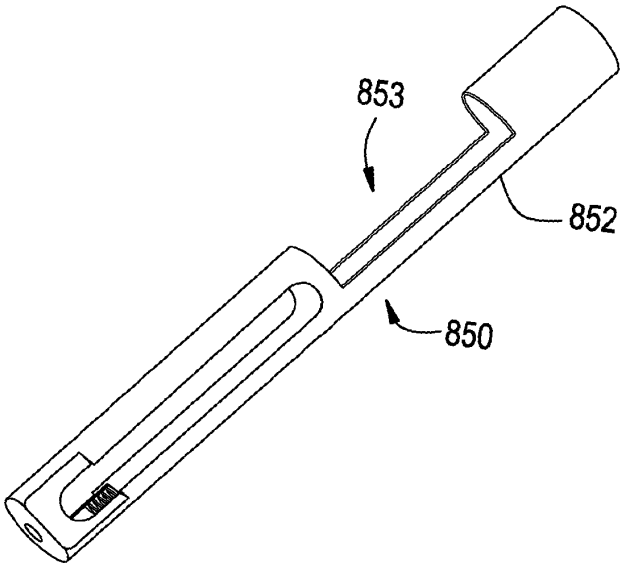

FIG. 22B

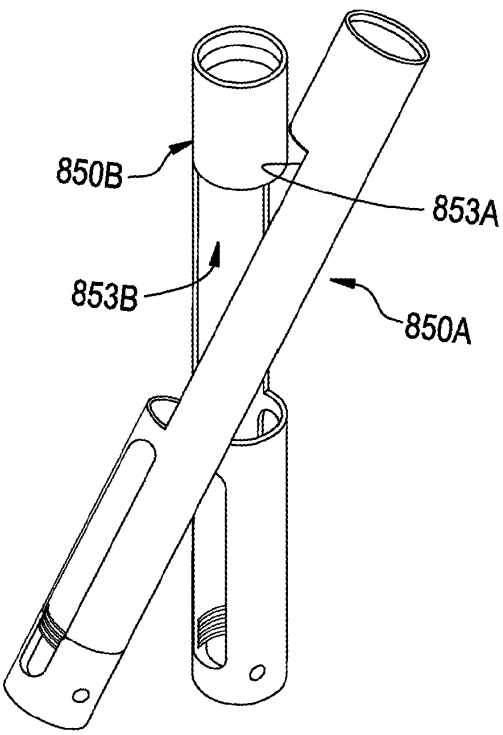

FIG. 23A

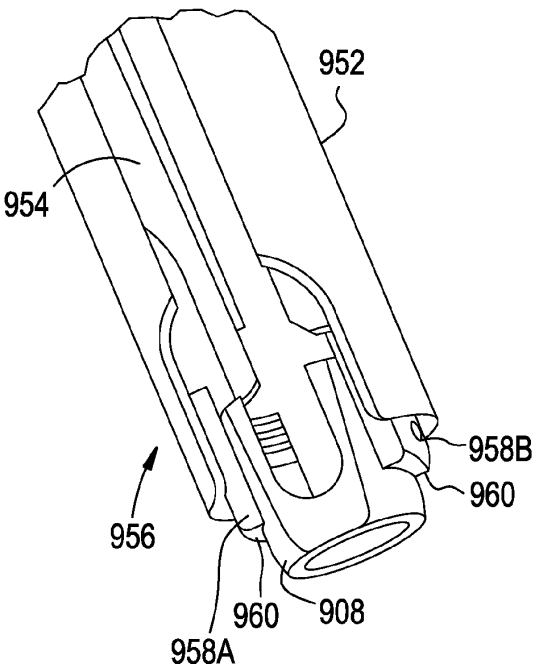

FIG. 23B

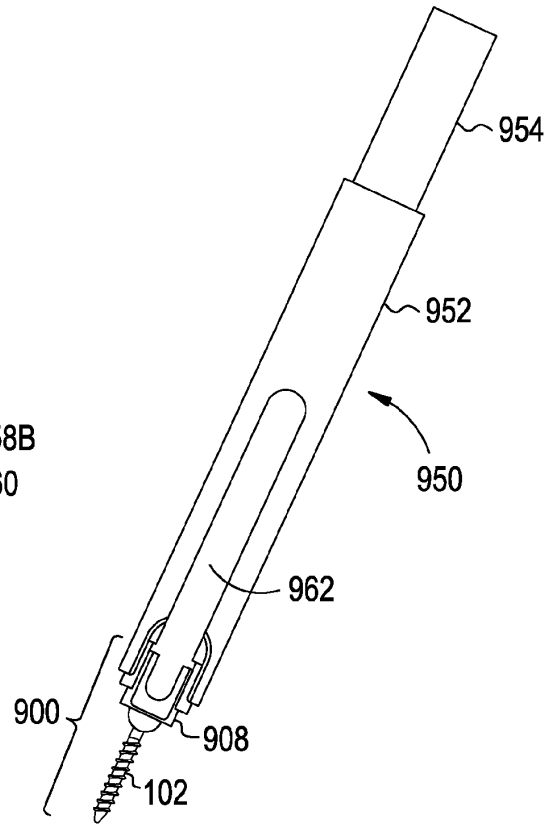

PERCUTANEOUS ACCESS DEVICES AND BONE ANCHOR ASSEMBLIES

CROSS-REFERENCE TO RELATED APPLICATIONS

This application is a continuation of U.S. patent application Ser. No. 11/672,539, filed Feb. 8, 2007, now abandoned, which is a continuation of U.S. patent application Ser. No. 10/738,286, filed Dec. 16, 2003, now U.S Pat. No. 7,179,261. Each of the previously mentioned patent application is incorporated herein by reference.

BACKGROUND

For a number of known reasons, spinal fixation devices are used in orthopedic surgery to align and/or fix a desired relationship between adjacent vertebral bodies. Such devices typically include a spinal fixation element, such as a relatively rigid fixation rod or plate, that is coupled to adjacent vertebrae by attaching the element to various anchoring devices, such as hooks, bolts, wires, or screws. The fixation elements can have a predetermined contour that has been designed according to the properties of the target implantation site, and once installed, the fixation element holds the vertebrae in a desired spatial relationship, either until desired healing or spinal fusion has taken place, or for some longer period of time.

Spinal fixation elements can be anchored to specific portions of the vertebrae. Since each vertebra varies in shape and size, a variety of anchoring devices have been developed to facilitate engagement of a particular portion of the bone. Pedicle screw assemblies, for example, have a shape and size that is configured to engage pedicle bone. Such screws typically include a threaded shank that is adapted to be threaded into a vertebra, and a head portion having a rod-receiving element, usually in the form of a U-shaped recess formed in the head. A set-screw, plug, or similar type of closure mechanism is used to lock the fixation element, e.g., a spinal rod, into the rod-receiving head of the pedicle screw. In use, the shank portion of each screw is threaded into a vertebra, and once properly positioned, a rod is seated through the rod-receiving member of each screw and the rod is locked in place by tightening a cap or other closure mechanism to securely interconnect each screw and the fixation rod.

Recently, the trend in spinal surgery has been moving toward providing minimally invasive devices and methods for implanting bone anchors and spinal fixation devices.

SUMMARY

Disclosed herein are percutaneous access devices that facilitate the delivery and implanting of bone anchors into bone, in particular, one or more vertebral bodies of the spine. In particular, the disclosed percutaneous access devices permit the delivery and implanting of one or more bone anchors in a minimally invasive manner thereby limiting trauma to surrounding tissue. Moreover, the percutaneous access devices disclosed herein can provide a percutaneous pathway between a skin incision and the bone anchor that may be used to deliver components of the bone anchor, such as the fastening mechanism, the fixation element, and/or instruments to the bone anchor. Also, disclosed herein are bone anchors that facilitate the connection of instruments, such as a percutaneous access device, to the bone anchor.

In accordance with one exemplary embodiment, a percutaneous access device includes an inner tube and an outer tube disposed about at least a portion of the inner tube. The outer tube, in the exemplary embodiment, is sized to span from at least a skin incision in a patient to a predetermined site proximate the spine of the patient. The distal end of the outer tube may be adapted to releasably engage a bone anchor. The inner tube, in the exemplary embodiment, may be adjustable relative to the outer tube along the longitudinal axis of the outer tube between a first position and a second position in which the distal end of the inner tube contacts the bone anchor.

In accordance with another exemplary embodiment, a bone anchor assembly includes a bone anchor having a proximal head and a distal bone engaging portion and a receiving member coupled to the bone anchor. The receiving member, in the exemplary embodiment, may have a proximal end, a distal end and a recess for receiving a spinal fixation element, such as a rod or a plate. The proximal end of the receiving member, in the exemplary embodiment, may have at least one arcuate groove formed on an exterior surface thereof to facilitate connection of an instrument, such as a percutaneous access device, to the receiving member.

BRIEF DESCRIPTION OF THE DRAWINGS

These and other features and advantages of the percutaneous access devices and bone anchor assemblies disclosed herein will be more fully understood by reference to the following detailed description in conjunction with the attached drawings in which like reference numerals refer to like elements through the different views. The drawings illustrate principles of the percutaneous access devices and bone anchor assemblies disclosed herein and, although not to scale, show relative dimensions.

FIG. **1** is a perspective view of an exemplary embodiment of a percutaneous access device;

FIG. **2** is a perspective view of the components of the percutaneous access device of FIG. **1**;

FIG. **3** is a perspective view of the distal end of the percutaneous access device of FIG. **1**;

FIG. **4** is a perspective view of the distal end of the percutaneous access device of FIG. **1** coupled to an exemplary embodiment of a bone anchor assembly;

FIG. **5** is a side elevational view of the bone anchor assembly of FIG. **4**;

FIG. **6** is a side elevational view of the receiving member of the bone anchor assembly of FIG. **4**;

FIG. **7** is a side elevational view in cross-section of the distal end of the percutaneous access device of FIG. **1** coupled to the receiving member of the bone anchor assembly of FIG. **4**;

FIG. **8** is a side elevational view in cross-section of the distal end of the outer tube of the percutaneous access device of FIG. **1** and the receiving member of the bone anchor assembly of FIG. **4**;

FIGS. **9** and **10** are side elevational views in cross section of the distal end of the inner tube of the percutaneous access device of FIG. **1** and the receiving member of the bone anchor assembly of FIG. **4**;

FIGS. **11**A-**11**D are perspective views of the distal end of the percutaneous access device of FIG. **1** and the receiving member of the bone anchor assembly of FIG. **4**, illustrating exemplary steps for releasably coupling the distal end of the percutaneous access device to the receiving member of the bone anchor assembly;

FIG. **12** is a side elevational view an another exemplary embodiment of a bone anchor assembly;

FIG. **13** is a side elevational view of the receiving member of the bone anchor assembly of FIG. **12**;

FIG. **14** is a side elevational view in cross section of the receiving member of the bone anchor assembly of FIG. **12**;

FIG. **15** is a side elevational view in cross section of an arcuate groove of the receiving member of the bone anchor assembly of FIG. **12**;

FIG. **16** is a side elevational view in cross-section of the distal end of the another exemplary embodiment of a percutaneous access device coupled to the receiving member of the bone anchor assembly of FIG. **12**;

FIGS. **17**A and **17**B are perspective views of an alternative embodiment of a percutaneous access device and a bone anchor assembly, illustrating a threaded connecting between the percutaneous access device and the bone anchor assembly;

FIGS. **18**A and **18**B are perspective views of an alternative embodiment of a percutaneous access device and a bone anchor assembly, illustrating a plurality of externally threaded removable tabs for releasable engagement with an instrument such as a percutaneous access device;

FIGS. **19**A-**19**D are perspective views of an alternative embodiment of a percutaneous access device and a bone anchor assembly, illustrating the percutaneous access device and the bone anchor assembly interconnected by one or more internal wires;

FIGS. **20**A-**20**D are perspective views of an alternative embodiment of a percutaneous access device and a bone anchor assembly, illustrating the percutaneous access device and the bone anchor assembly interconnected by one or more external wires;

FIG. **21** is a perspective view of an alternative embodiment of a bone anchor assembly having a plurality of removable tabs for releasable engagement with an instrument such as a percutaneous access device;

FIGS. **22**A-**22**B are perspective views of an exemplary embodiment of a percutaneous access device, illustrating axial cut-outs provided in the outer tube of the percutaneous access device; and

FIGS. **23**A-**23**B are perspective views of an alternative embodiment of a percutaneous access device and a bone anchor assembly, illustrating flexible tabs provided on the distal end of the percutaneous access device for releasable engagement with the bone anchor assembly.

DETAILED DESCRIPTION

Certain exemplary embodiments will now be described to provide an overall understanding of the principles of the structure, function, manufacture, and use of the percutaneous access devices and bone anchor assemblies disclosed herein. One or more examples of these embodiments are illustrated in the accompanying drawings. Those of ordinary skill in the art will understand that the percutaneous access devices and bone anchor assemblies specifically described herein and illustrated in the accompanying drawings are non-limiting exemplary embodiments and that the scope of the present invention is defined solely be the claims. The features illustrated or described in connection with one exemplary embodiment may be combined with the features of other embodiments. Such modifications and variations are intended to be included within the scope of the present invention.

The articles "a" and "an" are used herein to refer to one or to more than one (i.e. to at least one) of the grammatical object of the article. By way of example, "an element" means one element or more than one element.

The term "distal" as used herein with respect to any component or structure will generally refer to a position or orientation that is proximate, relatively, to the bone surface to which a bone anchor is to be applied. Conversely, the term "proximal" as used herein with respect to any component or structure will generally refer to a position or orientation that is distant, relatively, to the bone surface to which a bone anchor is to be applied.

The terms "comprise," "include," and "have," and the derivatives thereof, are used herein interchangeably as comprehensive, open-ended terms. For example, use of "comprising," "including," or "having" means that whatever element is comprised, had, or included, is not the only element encompassed by the subject of the clause that contains the verb.

FIGS. **1**-**5** illustrate an exemplary embodiment of a percutaneous access device **10**. The exemplary percutaneous access device **10** can facilitate the delivery and implanting of a bone anchor, such as the exemplary bone anchor assembly **100** illustrated and described below, into bone, in particular, one or more vertebral bodies of the spine. In particular, the exemplary percutaneous access device **10** can facilitate the delivery and implanting of a bone anchor in a minimally invasive manner and can provide a percutaneous pathway between a skin incision in the patent and the bone anchor that may be used to deliver components of the bone anchor, such as the closure mechanism, one or more fixation elements, and/or instruments to the bone anchor. The percutaneous access device **10** is preferably adapted to be introduced through a minimally invasive percutaneous incision, which is a relatively small incision that typically has a length less than the diameter or width of the device being inserted therethrough. Although the exemplary percutaneous access device **10** described below is designed primarily for use in spinal applications, one skilled in the art will appreciate that the exemplary percutaneous access device **10**, as well as the other exemplary embodiments described below, may be used to facilitate the implantation of any type of bone anchor to any type of bone.

The exemplary percutaneous access device **10** includes an inner tube **12** and an outer tube **14** disposed about at least a portion of the inner tube **12**. In the illustrated exemplary embodiment, the outer tube **14** is coaxially disposed about the inner tube **12** such that the inner tube **12** and the outer tube **14** share a common longitudinal axis **16**. One skilled in the art will appreciate, however, that the outer tube **14** and inner tube **12** need not be coaxially aligned. The inner tube **12** and the outer tube **14**, in the exemplary embodiment, are generally cylindrical in shape, having an approximately circular cross-section. One skilled in the art will appreciate, however, the inner tube **12** and the outer tube **14** may have other cross-sectional shapes, including, for example, elliptical or rectilinear. In the exemplary embodiment, the inner tube **12** and outer tube **14** have analogous cross-sections, however, one skilled in the art will appreciate the inner tube **12** and the outer tube **14** can have different cross-sectional shapes. The axial length of the inner tube **12** and outer tube **12** may vary depending on, for example, the patient anatomy, the procedures employed, and/or, that area of the spine in which the device **10** is employed. The inner tube **12** and the outer tube **14** may be linear, as in the exemplary embodiment, or may curved or angled along one or more sections or the entire length thereof. The inner tube **12** and the outer tube **14** may be constructed from any suitable biocompatible material, including, for example, a metal, such as stainless steel, or a polymer, from any conventional method of manufacturing medical devices.

Although the illustrated exemplary embodiment includes an inner tube and an outer tube, one skilled in the art will appreciate that any number of tubes, e.g., one or more tubes,

may be employed depending on, for example, the type of bone anchor employed and the manner by which the device is releasably engaged to the bone anchor. For example, exemplary embodiments of a percutaneous access device having a single outer tube are described below.

Continuing to refer to FIGS. **1-5**, the inner tube or sleeve **12** includes a proximal end **20**, a distal end **22**, and a lumen **24** extending between the proximal end **20** and the distal end **22**. The lumen **24** extends the length of the inner tube **12** and defines a longitudinal axis **26** of the inner tube **12**. The outer tube or sleeve **14** includes a proximal end **30**, a distal end **32**, and a lumen **34** extending between the proximal end **30** and the distal end **32**. The lumen **34** may extend the length of the outer tube **14** and defines a longitudinal axis **36** of the outer tube **14**. The inner tube **12** in positionable within the lumen **36** of the outer tube **14**. In the exemplary percutaneous access device **10**, the inner tube **12** is longitudinally adjustable with respect to the outer tube **14**. For example, the inner tube **12** may adjustable from a first, proximal position, in which the distal end **22** of the inner tube **12** is positioned proximal to the distal end **32** of the outer tube **14** as illustrated in FIG. **3**, and a second, distal position, in which the distal end **22** of the inner tube **12** is positioned proximate to the distal end **32** of the outer tube **14**. In the exemplary embodiment, the distal end **22** of the inner tube **12** preferably contacts at least a portion of the bone anchor assembly when the inner tube **12** is in the second position, as illustrated in FIGS. **4** and **7** and as discussed in more detail below.

The exemplary percutaneous access device **10** may include an adjustment mechanism **40** that allows an operator to adjust the relative longitudinal position of the inner tube **12** and the outer tube **14**. In the illustrated embodiment, for example, the adjustment mechanism **40** is a hollow, tubular shaped cap **41** having internal threads **42** that engage external threads **44** provided on the proximal end **30** of the outer tube **14**. The threads **42**, **44** allow the cap **41** to be longitudinal adjusted relative to the outer tube **14**. In the exemplary embodiment, the inner tube **12** is connected to the cap **41** and, thus, can move with cap **41** as the cap **41** is advanced or withdrawn relative to the outer tube **14**. For example, the proximal end **30** of the inner tube **12** of the exemplary embodiment may include one or more resilient tabs **46**, one or more of which may have a projection **48** that seats within an annular grove provided on the interior surface of the cap **41** to thereby connect the proximal end **30** of the inner tube **12** to the cap **41**. In the illustrated embodiment, two resilient tabs **46** are provided on opposite sides of the outer tube **14**. The projection **48**, in the exemplary embodiment, is sized to rotate with in the groove provided in the cap **41**, thus allowing the cap **41** to rotate relative to the inner tube **12**. The resilient tabs **46** are radially flexible to facilitate connection to and removal from the cap **41**. One skilled in the art will appreciate that other configurations for connecting the inner tube **12** to the cap **41** are possible and are within the scope of the present disclosure.

The inner tube **12** may be inhibited from rotating with respect to the outer tube **14**, limiting the relative motion of the inner tube **12** and the outer tube **14** to along the longitudinal axis **16** of the percutaneous access device. For example, one or more resilient tabs **56** may be provided on the inner tube **12** approximately midway between the proximal end **20** and the distal end **22** of the inner tube **12**, although other positions are possible. In the illustrated embodiment, two resilient tabs **56** are provided on opposite sides of the outer tube **14**. One or more of the resilient tabs **56** may include a projection **58** that is sized and shaped to seat within a longitudinal slot **54** provided in the outer sleeve **14**. The resilient tab **56** can be radially flexible to facilitate insertion into and removal from the slot **54**. The projection **58** can slide within the slot **54** and, thereby can limit the relative motion between the inner tube **12** and the outer tube **14** to along the longitudinal axis **16** of the percutaneous access device **10**. One skilled in the art will appreciate that other configurations for connecting the inner tube **12** to the outer tube **14** are possible and are within the scope of the present disclosure.

The inner tube **12** may have one or more sidewall openings or slots **60** formed therein. In the illustrated exemplary embodiment, the inner tube **12** includes two opposed slots **60** that extend longitudinally from the distal end **22** of the inner tube **12**. Like the inner tube **12**, the outer tube **14** may have one or more sidewall openings or slots **62** formed therein. In the illustrated exemplary embodiment, the outer tube **14** includes two opposed slots **62** that extend longitudinally from the distal end **32** of the inner tube **12**. The slots **60** and **62** can be used to facilitate positioning of a spinal fixation device, such as a rod or a plate, relative to one or more bone anchors. Methods and devices for spinal fixation element placement are disclosed in commonly owned, co-pending U.S. patent application Ser. No. 10/737.537, filed Dec. 16, 2003, entitled Method and Devices for Spinal Fixation Element Placement and commonly owned co-pending U.S. patent application Ser. No. 10/738,130, filed Dec. 16, 2003, entitled Method and Devices for Minimally Invasive Spinal Fixation Element Placement, both of which are incorporated herein in by reference. To facilitate positioning of a spinal fixation element, the slots **60** and the slots **62** are preferably aligned with one another along at least a portion of the longitudinal axis of the percutaneous access device **10**. The width and length of the slot **60** and slot **62** may be varied depending on the particular methods, instruments, and fixation elements being employed. In one exemplary embodiment, for example, the length of the slots **60** and **62** is selected to span at least from the skin incision to the distal end of the inner tube **12** and the outer tube **14**, respectively. In such embodiments, the slots **60** and **62** may be accessible from outside of the patient. In another exemplary embodiment, the length of the slots **60** and **62** is selected to span from the distal end of the inner tube **12** and the outer tube **14**, respectively, to a point distal to the skin incision. In such embodiments, the slots **60** and **62** may be accessible only from the lumens of the inner and outer tubes.

In embodiments in which multiple slots are employed, the slots **60**, **62** need not be similarly sized (width and/or length). For example, the one or more slots **60** may be sized differently than the one or more slots **62**, the one or more of the slots **60** on the inner tube may be sized differently than other slots **60**, and/or one or more of the slots **62** on the outer tube may be sized differently than other slots **62**. Although the exemplary embodiment includes two opposing slots on the inner tube **12** and the outer tube **14**, respectively, one skilled in the art will appreciate that any number of slots may be provided, e.g., no slots, one, two, three, etc. slots, may be provided depending on the method, instruments, and/or fixation element employed.

One skilled in the art will appreciate that the slots **60** and **62** are optional and that in certain embodiments slots may not be provided.

Referring to FIGS. **1-5** and **7**, the percutaneous access device **10** is preferably releasably engageable to a bone anchor. In the exemplary embodiment, the outer tube **14** may be releasably engaged to a bone anchor, such as bone anchor assembly **100**. For example, the outer tube **14** may be engaged to a bone anchor in a manner that allows the percutaneous access device **10** to be connected to the bone anchor **100** during use, e.g., during implantation and/or delivery and/or fastening of a spinal fixation element to the bone anchor, and

allows the percutaneous access device to be disconnected from the bone anchor **100** at the conclusion of the procedure. Preferably, the percutaneous access device **10** can be disconnected remotely. For example, the exemplary embodiment, the percutaneous access device **10** can be disconnected from the bone anchor by manipulation of the proximal end of the percutaneous access device **10**, as discussed in more detail below.

The distal end **32** of the outer tube **14** includes a pair of opposed longitudinally extending tabs **70**A and **70**B that may releaseable engage a bone anchor. In the exemplary embodiment, the tabs **70**A and **70**B are defined by the sidewalls of the outer tube **14** and are separated by slots **62**A and **62**B. In certain exemplary embodiments, the tabs **70**A and **70**B may be flexible and resilient in the radial direction to facilitate connection to a bone anchor. For example, the tabs **70**A and **70**B may be flexed apart in the radial direction from a first, relaxed position to facilitate advancement of the tabs longitudinally over a portion of the bone anchor. Once positioned about a portion of the bone anchor, the tabs **70**A and **70**B may provide a radially compressive force on the bone anchor as the tabs **70**A and **70**B attempt to return to the first, relaxed position. In other exemplary embodiments, including the exemplary percutaneous access device **10**, the tabs **70**A and **70**B need not be flexible and resilient.

In the illustrated exemplary embodiment, each tab **70**A and **70**B may include one or more radially inward facing projection **72** that is sized and shaped to seat within an opening provided in a portion of the bone anchor. The size, shape and number of projections can be varied depending on, for example, the opening(s) provided on the bone anchor and type of connection desired. In the illustrated exemplary embodiment, for example, each projection **72**A, **72**B is generally arcuate in shape and has a cross section that is complementary to an arcuate groove **130** provided in the spinal fixation element receiving member **108** of the exemplary bone anchor assembly **100** described below. In particular, the projection **72**A has a distal surface **74**, a proximal surface **76**, and a generally radially facing connecting surface **78** that spans between the distal surface **74** and the proximal surface **76**, as shown in FIG. **8**. In the illustrated embodiment, the distal surface **74** is generally oriented perpendicular to the longitudinal axis of the outer tube **14** and the connecting surface **78** is generally oriented parallel to the longitudinal axis of the outer tube **14** and perpendicular to the distal surface **74**. One or both of the proximal surface **76** and the distal surface **74** may be oriented at an angle other than perpendicular to the longitudinal axis of the outer tube **14**. For example, the proximal surface **76** may be oriented at an angle A to an orthogonal line **80**, which is oriented perpendicular to the longitudinal axis of the outer tube **14**. In the exemplary embodiment, the angle A may be approximately 5° to approximately 30° and is preferably approximately 20°. The distal surface **74** and the proximal surface **76** may be oriented at the same angle or, as in the exemplary embodiment, may be oriented at different angles.

Referring to FIGS. **2**, **3**, **4**, **7**, **9** and **10**, the distal end **22** of the inner tube **12** may include a contact surface **81** that contacts at least a portion of a bone anchor when the inner tube **12** is in the second position. In the illustrated exemplary embodiment, for example, the distal end **22** of the inner tube **12** may have two opposing generally arcuate contact surfaces **81**. The contact surfaces **81**, in the exemplary embodiment, are oriented approximately perpendicular to the longitudinal axis of the inner tube **12**. In the illustrated exemplary embodiment, the contact surfaces **81** are configured to contact a generally arcuate contact surface provided on the proximal end of the receiving member of the exemplary bone anchor assembly **100**. Preferably, the contact surface **81** is complementary in size, shape, and orientation to the contact surface on the bone anchor. One skilled in the art will appreciate that the configuration of the contact surface **81**, e.g., number, size, shape, and orientation of the contact surface **81**, may be varied to, for example, suit the bone anchor being employed.

The distal end **22** of the inner tube **12** and/or the distal end **32** of the outer tube **14** may be configured to inhibit rotation of the bone anchor assembly relative to the percutaneous access device **10**. For example, the distal end **22** of the inner tube may include one or more finger-like extensions **82** that extend approximately axially from the distal end **22** of the inner tuber **12** and engage a bone anchor to inhibit rotation of the bone relative to the percutaneous access device. For example, one or more of the extensions **82** may seat within a groove, recess, slot, or similar structure provided in the bone anchor. Alternatively, one of more of the extensions **82** may include a contact surface **84** for contacting an axially extending surface of the bone anchor, as in the case of the exemplary embodiment and as discussed in detail below.

FIGS. **5-6** illustrate an exemplary embodiment of a bone anchor assembly **100** that is particularly suited for use with the exemplary percutaneous access device **10** described. One skilled in the art will appreciate, however, that the percutaneous access devices disclosed herein are not limited to use with the exemplary bone anchor assembly **100** but instead may be configured for use with any type of bone anchor, e.g., bone screw or hook; mono-axial or polyaxial. Exemplary bone anchor assembly **100** includes a bone screw **102**, such as a pedicle screw, having a proximal head **104** and a distal bone engaging portion **106**, which in the illustrated exemplary embodiment is an externally threaded screw shank. The exemplary bone screw assembly **100** also includes a receiving member **108** that is configured to receive and couple a spinal fixation element, such as a spinal rod or spinal plate, to the bone anchor assembly **100**.

The receiving member **108** may be coupled to the bone anchor **102** in any well-known conventional manner. For example, the bone anchor assembly may be poly-axial, as in the present exemplary embodiment in which the bone anchor **102** may be adjustable to multiple angles relative to the receiving member **108**, or the bone anchor assembly may be mono-axial, e.g., the bone anchor **102** is fixed relative to the receiving member **108**. An exemplary poly-axial bone screw is described U.S. Pat. No. 5,672,176, incorporated herein by reference. In mono-axial embodiments, the bone anchor **102** and the receiving member may be coaxial or may be oriented at angle with respect to one another. In poly-axial embodiments, the bone anchor may biased to a particular angle or range of angles to provide a favored angle the bone anchor. Exemplary favored-angle bone screws are described in U.S. Patent Application Publication No. 2003/0055426 and U.S. Patent Application Publication No. 2002/0058942, both of which are incorporated herein by reference.

The receiving member **108** of the illustrated exemplary embodiment includes a proximal end **110**, a distal end **112**, and a recess or slot **114** for receiving a spinal fixation element such as a spinal rod. The proximal end **110** of the receiving member **108** has a first bore **116** defining a first bore axis **118**. The recess **114** communicates with the first bore **116** such that a spinal fixation element may be positioned through the first bore **116** into the recess **114**. The distal end **112** has a second bore **120** opposite the second bore **116** and defining a second bore axis **122**. The second bore axis **122** is designed to receive the head **104** of the bone anchor **102** to couple the bone anchor **102** to the receiving member **108**. In the illustrated exemplary

embodiment, the head **104** is seated within the second bore **116**. As the exemplary illustrated embodiment of the bone anchor assembly is poly-axial, the bone anchor **102** is free to rotate relative to the receiving member **108** such that the longitudinal axis **124** of the bone anchor **102** is positionable at an angle relative to the second bore axis **120**. The second bore **116** may be conically shaped to facilitate adjustment of the bone anchor **102** relative to the receiving member **108**. In favored-angled embodiments, the second bore axis **122** may be positioned at an angle (other than 0°) to the first bore axis **118**. In the illustrated embodiment, the first bore axis **118** and second bore axis **122** are coaxial. In the exemplary embodiment, the receiving member **108** has a generally U-shaped cross-section defined by two legs **124**A and **124**B separated by recess **114**. Each leg **124**A, **124**B is free at the proximal end **110** of the receiving member **108**.

The receiving member **108** may be configured to receive a closure mechanism that locks a spinal fixation element within the recess **114**. The closure mechanism may be a cap that is advanceable through the first bore **116** of the receiving member **108** and seats against the spinal fixation element. For example, the cap may have external threads that engage internal threads **148** provided in the receiving member **108**, e.g., on the legs **124**A, B, as in the exemplary embodiment. Any type of conventional closure mechanism may be employed, including, for example, non-threaded caps, multi-component closure mechanisms, and/or external caps.

The receiving member **108** of the exemplary bone anchor assembly **100** is configured to be releasably connected to an instrument such as the exemplary percutaneous access device **10** described above. For example, the receiving member **108** may include at least one groove **130** that is configured to receive a portion of an instrument to releasably connect the instrument to the bone anchor assembly. The size, shape, position, and number of grooves can be varied depending on, for example, the instrument employed and the type of connection desired. In certain embodiments, for example, at least one arcuate groove **130** may be provided on an exterior surface of the proximal end **110** of the receiving member **108**. In other exemplary embodiments, at least one arcuate groove may be provided on an interior surface of the proximal end **110** of the receiving member **108**. In the illustrated exemplary embodiment, each leg **124**A and **124**B may be provided with an arcuate groove **130**A, **130**B, respectively, at the free, proximal end of the leg **124**A, **124**B. The grooves **130**A, **130**B may extend about a portion or all of the circumference of the proximal end of each leg **124**A, **124**B. Each groove **130**A, **130**B may have size and shape that is complementary in size and shape to a projection provided on the instrument. For example, in the illustrated exemplary embodiment, the each groove **130**A, **130**B may be arcuate and may have a cross-section complementary to the cross-section of a projection **72**A, **72**B provided on the tabs **70**A, **70**B of the outer sleeve **14**. In particular, groove **130** may have a distal surface **132**, a proximal surface **134** and an interconnecting surface **136** that spans between the distal surface **132** and the proximal surface **134**, as illustrated in FIG. **8**. The distal surface **132** and/or the proximal surface **134** may be oriented to facilitate insertion of a projection into the grove **130** and/or to inhibit undesirable separation of the projection from the groove **130**. In the illustrated exemplary embodiment, for example, the distal surface **132** may be generally oriented at an angle B to an orthogonal line **140**, which is oriented perpendicular to the longitudinal axis of the receiving member **108**, to facilitate insertion of the projection into the groove. In the exemplary embodiment, the angle B may be approximately 0° to approximately 45° and preferably approximately 30° to 40°. In the illustrated exemplary embodiment, the proximal surface **134** may be oriented at an angle other than perpendicular to longitudinal axis of the receiving member **108** to inhibit separation of the projection from the groove **130**, particularly in radial direction. For example, the proximal surface **134** may be oriented at an angle C to an orthogonal line **142**, which is perpendicular to the longitudinal axis of the receiving member **108**. In the exemplary embodiment, the angle C may be approximately 5° to approximately 30° and is preferably approximately 20°. The distal surface **132** and the proximal surface **76** may be oriented at the same angle or, as in the exemplary embodiment, may be oriented at different angles. The grooves **130**A and **130**B, as well as any additional grooves, may have similar cross-sectional geometries, as in the case of the illustrated exemplary embodiment, or may have distinct geometries.

Referring to FIGS. **7** and **8**, the proximal surface **76** of each projection **72** may be oriented at an angle A that is approximately equal to the angle C of the proximal surface **134** of the corresponding groove. In one preferred embodiment, for example, angle A and angle C are each approximately 20°. One skilled in the art will appreciate that angle A and angle C need not be approximately equal but instead, may be separate, distinct angles.

The proximal end **110** of the receiving member **108** may include one or more contact surfaces that may be contacted by an instrument such as the percutaneous access device **10**. In the illustrated exemplary embodiment, for example, the proximal end of each leg **124**A, **124**B may include one or more generally arcuate, proximally facing contact surfaces **145**.

The outer diameter of the percutaneous access device may be selected to be approximately equal to the outer diameter of the bone anchor to facilitate insertion of the bone anchor into the body through a percutaneous pathway of minimal size. For example, in the illustrated exemplary embodiment, the outer diameter of the outer tube **14**, indicated by line D_1 in FIG. **7**, at at least the distal end **32** of the outer tube **14**, is approximately equal to, or less than, the outer diameter of the receiving member **108**, indicated by line d_1 in FIGS. **6** and **7**. For example, the diameter of the outer tube **14** may taper from a proximal diameter D_2 to a distal diameter D_1 at the distal end **32** of the outer tube **14**. Alternatively, the outer diameter of the outer tube **14** may be approximately equal to, or less than, the outer diameter of the receiving member **108** along the entire length of the outer tube **14**. To accommodate the outer tube **14**, the proximal end **110** of the receiving member **108** may have a diameter d_2 that is less than the diameter d_1 of a distal section of the receiving member **108**, as illustrated in FIG. **6**. For example, the diameter d_2 proximal to the grooves **130**A, B may be less than the diameter d_1 of the receiving member **108** to provide a reduced diameter portion **150** at he proximal end **130** of the receiving member. The distance between the exterior surface of reduced diameter portion **150** and the exterior surface of the receiving member **108**, indicated by line E in FIGS. **6** and **8**, is preferably greater than or approximately equal to the radial thickness of a tab **70**A, **70**B, as indicated by line F in FIG. **8**.

To facilitate delivery of devices to the bone anchor assembly through the percutaneous access device **10**, the inner diameter of the lumen **24** of the inner tube **12**, indicated by line F in FIG. **7**, at at least the distal end of the inner tube **12**, may be greater than or approximately equal to the inner diameter of at least a portion of the receiving member, indicated by line f in FIG. **7**. [**58**] Exemplary operation of the percutaneous access device **10** with the exemplary bone anchor assembly will be described with reference to FIGS. **11**A-**11**D. To releasably connect the percutaneous access

device **10**, the distal end **32** of the outer tube **14** is oriented such that tabs **70**A and **70**B are aligned with recess **114**, as illustrated in FIG. **11**A. The percutaneous access device **10** is advanced distally until each tab **70**A, **70**B is positioned between the legs **124**A and **124**B, as illustrated in FIG. **11**B. The percutaneous access device **10** may be rotated about its longitudinal axis **16** to rotate projections **72**A, **72**B into grooves **103**B, **130**A, respectively, as illustrated in FIG. **11**C. The inner tube **12** may be advanced distally along the longitudinal axis **16** of the percutaneous access device **10** from the first, proximal position, illustrated in FIGS. **11**A-C, to the second, distal position, illustrated in FIG. **11**D, in which the contact surfaces **81** of the inner tube **12** contact the contact surfaces **145**A, **145**B provided on the proximal end of the receiving member of the exemplary bone anchor assembly **100**, to thereby releasably connect the percutaneous access device **10** to the bone anchor assembly **100**. The contact surface **84** of one or more of the extensions **82** may engage the axial extending contact surfaces **152** (FIGS. **5** and **6**) to inhibit rotation between the percutaneous access device and the bone anchor assembly.

The percutaneous access device **10** may be connected to the exemplary bone anchor assembly **100**, or another bone anchor assembly, before implantation of the bone anchor assembly or after the bone anchor assembly is implanted into the patient's body.

Once the percutaneous access device **10** is releasably connected to the bone anchor assembly **100** as illustrated in FIGS. **1** and **11**D, the percutaneous access device **10** may provide a percutaneous pathway between the skin incision and the bone anchor **100** that facilitates delivery of instruments, spinal fixation elements, and/or components of the bone anchor assembly, such as the closure mechanism, to the bone anchor assembly **100**. In the illustrated exemplary embodiment, for example, the lumen **24** provides a pathway to the first bore **116** of the receiving member **108** of the bone anchor assembly **100**, that may allow a closure mechanism, such as a threaded cap, to be delivered to the receiving member **108** of the bone anchor assembly and/or may allow a screw driver or the like to be advanced into engagement with the head **104** of the bone anchor **102**. Moreover, in the illustrated exemplary embodiment, the slots **60** of the inner tube and the slots **62** of the outer tube **14** may be aligned with the recess **114** provided in the receiving member **108**. Alignment of the slots **60** and **62** with the recess **114** facilitates the delivery of a spinal fixation element to the bone anchor assembly. Exemplary methods and devices for delivering a spinal fixation element to a bone anchor assembly are described in commonly owned, co-pending U.S. patent application Ser. No. 10/737.537, filed Dec. 16, 2003, entitled Method and Devices for Spinal Fixation Element Placement and commonly owned co-pending U.S. patent application Ser. No. 10/738,130, filed Dec. 16, 2003, entitled Method and Devices for Minimally Invasive Spinal Fixation Element Placement, each of which is incorporated herein in by reference.

The percutaneous access device **10** may be released from the bone anchor by rotating the percutaneous access device **10** about its longitudinal axis **16** and retracting the device **10** distally.

FIGS. **12-16** illustrate an alternative exemplary embodiment of a bone anchor assembly **200** and an exemplary percutaneous access device **300** that may be configured to releasably engage the bone anchor assembly **200**. The exemplary bone anchor assembly **200** is analogous in construction to the exemplary bone anchor assembly **10** described above, except that the receiving member **208** of the bone anchor assembly **200** has a generally constant outer diameter d_1, as illustrated in FIGS. **14** and **16**, at the proximal end **110** thereof, and, thus, lacks the reduced diameter portion **150** of bone anchor assembly **100**. As a result, the outer diameter of the distal end **32** of the outer tube **14** of the exemplary percutaneous access device **300**, indicated by line D_2 in FIG. **16**, may be approximately equal to or, as in the illustrated embodiment, may be greater than the diameter d_1 of the proximal end **110** of the receiving member **208**. The outer diameter of the outer tube **14** may be constant, as in the illustrated exemplary embodiment, or may vary along the length of the outer tube **14**.

FIGS. **17**A and **17**B illustrate an alternative embodiment of a percutaneous access device **350** and a bone anchor assembly **400**, in which the percutaneous access device and the bone anchor assembly are interconnected by threads. For example, the percutaneous access device **350** may have an outer tube **352** having a distal end **354** provided within internal threads that releasably engage external threads **406** provided on the proximal end **412** of the receiving member **408** of the bone anchor assembly **400**. Preferably, the external threads **406** are clocked to facilitate alignment of the grooves **62**, if any, provided on the outer tube **14** with the recess **414** provided in the receiving member **408**. In the illustrated exemplary embodiment, the percutaneous access device **350** includes a single tube, outer tube **352**; an inner tube may be provided but is not necessary.

FIGS. **18**A and **18**B illustrate an alternative embodiment a bone anchor assembly **500**, in which the receiving member **508** includes one or more removable, externally threaded tabs **502** that provide a threaded connecting between the percutaneous access device **350** and the bone anchor assembly **500**. In the illustrated exemplary embodiment, a pair of proximally extending tabs **502**A and **502**B extend from the legs **524**A and **524**B, respectively. Each tab **502**, in the illustrated exemplary embodiment, is generally arcuate in shape and includes external threads for engagement with internal threads provided on the percutaneous access device. The tabs **502** may include internal threads **415** to facilitate advancement of a closure mechanism to the bone anchor assembly. Tabs **502** may be sheared off the bone anchor assembly **500** by over tightening of the percutaneous access device **350** or, alternatively, may be removed from the bone anchor assembly **500** after withdrawal of the percutaneous access device **350** by a suitable instrument.

FIGS. **19**A-**19**D illustrate an alternative embodiment of a percutaneous access device **550** and a bone anchor assembly **600**, in which the percutaneous access device **500** and the bone anchor assembly **600** are releasably interconnected by one or more internal wires **551**. In the illustrated exemplary embodiment, for example, a pair of wires **551**, extend axially through opposing side walls of the outer tube **552**. Each wire extends through parallel axial holes provided in the side walls of the outer tube **552**. Each wire **551** may form a loop **553** that can engage the receiving member **608** of the bone anchor assembly. The wires may be formed of any suitable biocompatible material including, for example a metal, such as a stainless, or a polymer. The receiving member **608**, in the exemplary embodiment, includes two pairs of axially extending holes **611** for receiving wires **551**. Each pair of holes **611** may terminate in a groove **613** oriented perpendicular to the holes **611**. The number of wires and holes provided in the outer tube and the receiving member may be varied depending on the application. Each wire **551** may be tensioned to couple the percutaneous access device **550** to the bone anchor assembly. The wires **551** may be tensioned by, for example, retracting the wires **551** distally. Releasing the tension on the wires **551** by, for example, cutting the wires **551** or advancing

the wires **551** proximally, can release the percutaneous access device **550** from the bone anchor assembly **600**. In the illustrated exemplary embodiment, the percutaneous access device **550** includes a single tube, outer tube **552**; an inner tube may be provided but is not necessary.

FIGS. **20**A-**20**D illustrates an alternative embodiment of a percutaneous access device **650** and a bone anchor assembly **700** in which the percutaneous access device **650** and the bone anchor assembly **700** are releasably interconnected by one or more externally positioned wires **551**. The illustrated exemplary embodiment, wires **551** extend axially along the exterior surface of the outer tube **652** of the percutaneous access device **650** and extend axially along the exterior surface of the receiving member **708** of the bone anchor assembly **700**. The outer tube **652** may include one or more axially oriented grooves **653** in which the wires **551** may be seated. Likewise, the receiving member **708** may include one or more grooves **707** in which the wires **651** may be seated. The number of wires and/or grooves may be varied depending upon the particular application. In the illustrated embodiment, for example, a pair of parallel grooves **653** are provided in opposing sidewalls of the outer tube **652** and a pair of parallel of grooves **707** are provided in the opposing legs **724**A, **724**B of the receiving member **708**. Each wire **551** may be tensioned to couple the percutaneous access device **650** to the bone anchor assembly **700**. The wires **551** may be tensioned by, for example, retracting the wires **551** distally. Releasing the tension on the wires **551** by, for example, cutting the wires **551** or advancing the wires **551** proximally, can release the percutaneous access device **650** from the bone anchor assembly **700**. In the illustrated exemplary embodiment, the percutaneous access device **650** includes a single tube, outer tube **652**; an inner tube may be provided but is not necessary.

FIG. **21** illustrates an alternative embodiment of a bone anchor assembly **800** having one or more removable tabs **801** for releasable engagement with an instrument such as an embodiment of a percutaneous access device described above. In the illustrated exemplary embodiment, a pair of opposing tabs **801**A, **801**B extend proximally from the proximal end of the receiving member **808** of the bone anchor assembly **800**. Each tab **801**A, **801**B, in the illustrated exemplary embodiment, is generally arcuate in shape and are positioned proximal to and extend from a respective leg **824**A, **824**B of the receiving member **808**. The size, shape, and number of tabs **801** may be varied without departing from the scope of the present invention. The tabs **801** may include a mechanism for facilitating releasable engagement by an instrument. For example, the tabs may be provided with external threads, as in the case of the embodiment illustrated in FIGS. **17**A, **17**B described above, or may include one or more grooves. In the illustrated exemplary embodiment, each tab **801**A, **801**B includes one or more arcuate grooves **830**A, **830**B that may be analogous in construction to the grooves **130**A, **130**B described above. The tabs **801** may include internal threads **815** to facilitate advancement of a closure mechanism to the bone anchor assembly. Tabs **801** may be sheared off the bone anchor assembly **800** by the percutaneous access device or instrument or, alternatively, may be removed from the bone anchor assembly **800** after withdrawal of the percutaneous access device or instrument using a suitable instrument.

FIGS. **22**A-**22**B illustrates an exemplary embodiment of a percutaneous access device **850** having one or more axially extending cut-outs **853** provided in the outer tube **852** of the percutaneous access device. As illustrated in FIG. **22**B, an axially extending cut-out **853** may facilitate the use of multiple percutaneous access devices by minimizing interference between the devices. For example, in certain spinal applications, bone anchors placed on adjacent vertebrae may be closely spaced and/or angled in a manner that may cause interference between instruments, such as a percutaneous access device disclosed herein, used simultaneously with the adjacent bone anchors. By providing axial cut-outs **853**, two or more percutaneous access devices **850**A, **850**B may be employed on adjacent bone anchors, or closely positioned anchors, by aligning the cut-outs **853**A, **853**B. The length and depth of a cut-out **852** may be varied depending on the application. One or more cut-outs may be provided on any of the exemplary embodiments of the percutaneous access device described herein or with other instruments used with bone anchors, e.g., drills, drivers, cannulas, approximators, and the like. In embodiments including an inner tube or additional tubes, the additional tubes may also be provided with cut-outs **853**.

FIGS. **23**A-**23**B illustrates an alternative embodiment of a percutaneous access device **950** and a bone anchor assembly **900** in which the distal end **956** of the inner tube **954** of the percutaneous access device **950** includes one or more flexible bone anchor engaging tabs **958** for releasable engagement with the receiving member **908** of bone anchor assembly **900**. In the exemplary embodiment, a pair of opposing tabs **958**A, **958**B extend distally from the distal end **956** of the inner tube **954**. Each tab **958**, in the illustrated exemplary embodiment, is connected at a proximal end to the inner tube **954** and has a free distal end **960**. One or both of the tabs **958** can flex from a first position, in which the tab **958** is oriented approximately axially, e.g., parallel to the longitudinal axis of the inner tube **954**, to a second position, in which the tab **958** is generally oriented at angle to the longitudinal axis of the inner tube **954**. In the exemplary embodiment, for example, each tab **958**A, **958**B may flexed radially outward, e.g., away from each other, from a first position, in which the tabs **958**A, **958**B are approximately parallel, to a second, flexed positioned, in which the tabs **958**A, **958**B are oriented at an angle to one another. The tabs **958** may be biased to the first position. For example, the tabs **958**A, **958**B may be biased to the first, parallel position, such that the tabs **958**A, **958**B may provide a radially compressive force on the receiving member **908** to releasably engage the receiving member **908**. One or more of the tabs **958** may be provided with a projection or the like for engaging a hole, groove, etc, that may be provided in the exterior surface of the receiving member **908**. Although the exemplary embodiment includes two tabs **958**A, **958**B, any number (one or more) tabs **958** may be provided.

The percutaneous access device **950** may include an outer tube **952** that may be advanced about the tabs **958** when the tabs **958** releasably engage the receiving member **908**. For example, in the illustrated exemplary embodiment, the outer tube **952** may be advanced distally about the tabs **958**A, **958**B when the tabs are in the second, flexed position, to inhibit separation of the tabs **958**A, **958**B and/or provide a radially compressive force on the tabs.

Non-limiting examples of applications of the bone fixation plates described herein include long bone fracture fixation/stabilization, small bone stabilization, lumbar spine as well as thoracic stabilization/fusion, cervical spine compression/fixation, and skull fracture/reconstruction plating.

While the percutaneous access systems and bone anchor assemblies of the present invention have been particularly shown and described with reference to the exemplary embodiments thereof, those of ordinary skill in the art will understand that various changes may be made in the form and details herein without departing from the spirit and scope of the present invention. Those of ordinary skill in the art will

recognize or be able to ascertain many equivalents to the exemplary embodiments described specifically herein by using no more than routine experimentation. Such equivalents are intended to be encompassed by the scope of the present invention and the appended claims.

The invention claimed is:

1. In the combination of a bone attachment structure having a receiver and a guide tool having receiver attachment structure at a lower end thereof that is operably mateable with the receiver, the improvement comprising:

a) the receiver having an aperture and a recess communicating with the aperture; and

b) the guide tool including a inner tube having a proximal end, a distal end and a lumen extending from the proximal end to the distal end, the inner tube having a first slot formed therein, the first slot opening at the distal end and extending a first slot length toward the proximal end of the inner tube, the guide tool including an outer tube coaxially disposed about the inner tube, the outer tube having a proximal end, a distal end and a lumen extending from the proximal end to the distal end, the outer tube having a second slot formed therein, the second slot opening at the distal end and extending a second slot length toward the proximal end of the outer tube, the distal end of the outer tube having an inner projection, the projection having mating structure receivable in the recess for operably resisting radial splaying and separation of the tool from the receiver when joined together.

2. In the combination of a bone screw having a head and a manipulation tool having attachment structure at a lower end thereof that is operably mateable with the bone screw head; the improvement comprising:

a) the bone screw head having a top, a bottom, and a circumferentially extending undercut first surface facing downwardly toward said bottom;

b) the manipulation tool including a inner tube having a proximal end, a distal end and a lumen extending from the proximal end to the distal end, the inner tube having a first slot formed therein, the first slot opening at the distal end and extending a first slot length toward the proximal end of the inner tube, the manipulation tool including an outer tube coaxially disposed about the inner tube, the outer tube having a proximal end, a distal end and a lumen extending from the proximal end to the distal end, the outer tube having a second slot formed therein, the second slot opening at the distal end and extending a second slot length toward the proximal end of the outer tube, the distal end of the outer tube having a projection with a circumferentially extending second surface; and

c) the first and second surfaces being sized, shaped and positioned to provide for operable mating overlapping alignment of the manipulation tool relative to the bone screw head.

3. The improvement of claim **2** wherein:

a) the undercut first surface includes a recess and the projection includes extending second surface mating structure that overlaps with the undercut surface in the recess so as to operably resist splaying and separation of the manipulation tool from the receiver when joined together.

4. A spinal system comprising:

a bone anchor assembly having a bone screw and a receiver member coupled to the bone screw for receiving a spinal fixation element, the receiver member having a proximal end, a distal end, a bore extending from the proximal end to the distal end, and a recess intersecting the bore for receiving the spinal fixation element, the bore defining a bore axis, the proximal end of the receiver member having a generally U-shaped cross-section defined by two spaced apart legs separated by the recess, each leg having a free proximal end including an arcuate groove on an exterior surface thereof, each arcuate groove having a proximal surface, a distal surface, and an interconnecting surface, the proximal surface being angled distally at a non-zero angle relative to a plane orthogonal to the bore axis;

an instrument having a tubular body, the tubular body having a proximal end, a distal end and a lumen extending from the proximal end to the distal end, the instrument including an inner tube, the tubular body disposed about at least a portion of the inner tube, the tubular body having a pair of opposed tabs separated by a pair of opposed slots, the slots opening at the distal end and extending a slot length toward the proximal end of the tubular body, each tab including an inward projection at a distal end of the tab, each projection being sized and shaped to fit within one of the arcuate grooves of the receiver member and thereby releasable connect the instrument to the bone anchor assembly.

5. The system of claim **4**, wherein the proximal surface of each arcuate groove is angled distally at a non-zero angle relative to a plane orthogonal to the bore axis.

6. The system of claim **4**, wherein each inward projection of the tabs includes a proximal surface oriented at an angle approximately equal to the angle of the proximal surface of the corresponding arcuate groove.

7. The system of claim **4**, wherein the inner tube includes a pair of opposed tabs separated by a pair of opposed slots, the slots opening at a distal end of the inner tube and extending a slot length toward a proximal end of the inner tube.

8. The system of claim **4**, wherein the inner tube is adjustable relative to the tubular body along a longitudinal axis of the tubular body.

* * * * *