US007857834B2

(12) **United States Patent**
Boschert

(10) **Patent No.: US 7,857,834 B2**
(45) **Date of Patent: Dec. 28, 2010**

(54) **SPINAL IMPLANT FIXATION ASSEMBLY**

(75) Inventor: **Paul F. Boschert**, Minneapolis, MN (US)

(73) Assignee: **Zimmer Spine, Inc.**, Minneapolis, MN (US)

(*) Notice: Subject to any disclaimer, the term of this patent is extended or adjusted under 35 U.S.C. 154(b) by 0 days.

(21) Appl. No.: **10/874,785**

(22) Filed: **Jun. 14, 2004**

(65) **Prior Publication Data**

US 2005/0277928 A1 Dec. 15, 2005

(51) **Int. Cl.**
A61B 17/70 (2006.01)

(52) **U.S. Cl.** **606/269**; 606/266

(58) **Field of Classification Search** 606/61, 606/73, 250–279, 287, 300–331
See application file for complete search history.

(56) **References Cited**

U.S. PATENT DOCUMENTS

5,024,213 A 6/1991 Asher et al.
5,129,388 A 7/1992 Vignaud et al.
5,129,900 A * 7/1992 Asher et al. 606/264
5,257,993 A 11/1993 Asher et al.
5,443,467 A 8/1995 Biedermann et al.
5,476,464 A 12/1995 Metz-Stavenhagen et al.
5,487,744 A * 1/1996 Howland 606/61
5,628,740 A 5/1997 Mullane
5,662,650 A * 9/1997 Bailey et al. 606/59
5,669,911 A * 9/1997 Errico et al. 606/264
5,672,176 A 9/1997 Biedermann et al.
5,733,286 A 3/1998 Errico et al.
5,782,833 A 7/1998 Haider
5,879,350 A 3/1999 Sherman et al.
5,882,350 A * 3/1999 Ralph et al. 606/278
5,885,286 A 3/1999 Sherman et al.
5,954,725 A * 9/1999 Sherman et al. 606/78
5,964,760 A * 10/1999 Richelsoph 606/279
6,010,503 A * 1/2000 Richelsoph et al. 606/278
6,053,917 A * 4/2000 Sherman et al. 606/61
6,063,090 A 5/2000 Schlapfer
6,074,391 A 6/2000 Metz-Stavenhagen et al.

(Continued)

FOREIGN PATENT DOCUMENTS

EP 0 786 235 B1 7/1997

(Continued)

OTHER PUBLICATIONS

Exhibit A: Three views of the Xia™ Pedicle Screw from Stryker Hownedica Osteonics (Date: This art was known prior to filing of present U.S. Appl. No. 10/874,785.).

Primary Examiner—Thomas C Barrett
Assistant Examiner—Larry E Waggle
(74) *Attorney, Agent, or Firm*—Seager, Tufte & Wickhem, LLC

(57) **ABSTRACT**

An orthopedic fixation device for securing a rod to a bone is provided. The fixation device includes a receiver with two legs, a pocket defined between the legs, an anchor including a head, and a seat structure that mounts within the receiver. The seat structure includes a top seat for receiving the rod and a bottom seat for receiving the head of the anchor. The top seat includes two legs defining a pocket and first and second raised ridges that are spaced apart from one another. The legs each define a recessed portion extending between the two raised ridges.

19 Claims, 16 Drawing Sheets

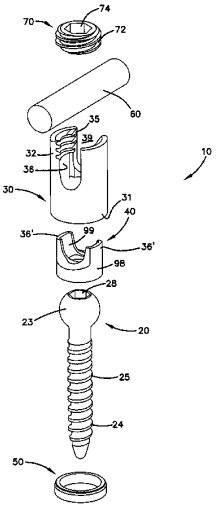

U.S. PATENT DOCUMENTS

6,077,262	A	6/2000	Schlapfer et al.	
6,113,601	A	9/2000	Tatar	
6,146,383	A *	11/2000	Studer et al.	606/308
6,248,105	B1	6/2001	Schlapfer et al.	
6,280,442	B1 *	8/2001	Barker et al.	606/60
6,355,040	B1	3/2002	Richelsoph et al.	
6,371,957	B1	4/2002	Amrein et al.	
6,440,137	B1 *	8/2002	Horvath et al.	606/73
6,471,705	B1 *	10/2002	Biedermann et al.	606/61
6,488,681	B2	12/2002	Martin et al.	
6,835,196	B2 *	12/2004	Biedermann et al.	606/308
7,087,057	B2 *	8/2006	Konieczynski et al.	606/278
2002/0133154	A1	9/2002	Saint Martin	
2002/0143341	A1	10/2002	Biedermann et al.	
2002/0173791	A1 *	11/2002	Howland	606/61
2003/0023243	A1	1/2003	Biedermann et al.	
2003/0100896	A1	5/2003	Biedermann et al.	
2003/0100904	A1	5/2003	Biedermann	
2003/0114852	A1	6/2003	Biedermann et al.	
2003/0125741	A1	7/2003	Biedermann et al.	
2003/0158552	A1 *	8/2003	Jeon et al.	606/61
2003/0187433	A1	10/2003	Lin	
2003/0199873	A1	10/2003	Richelsoph	
2004/0176766	A1 *	9/2004	Shluzas	606/65
2006/0089643	A1 *	4/2006	Mujwid	606/61

FOREIGN PATENT DOCUMENTS

EP	1 402 828	A1	3/2004
FR	2 794 637	A1	12/2000
WO	WO 03/068083	A1	8/2003
WO	WO 2005/018471	A1	3/2005

* cited by examiner

FIG.1

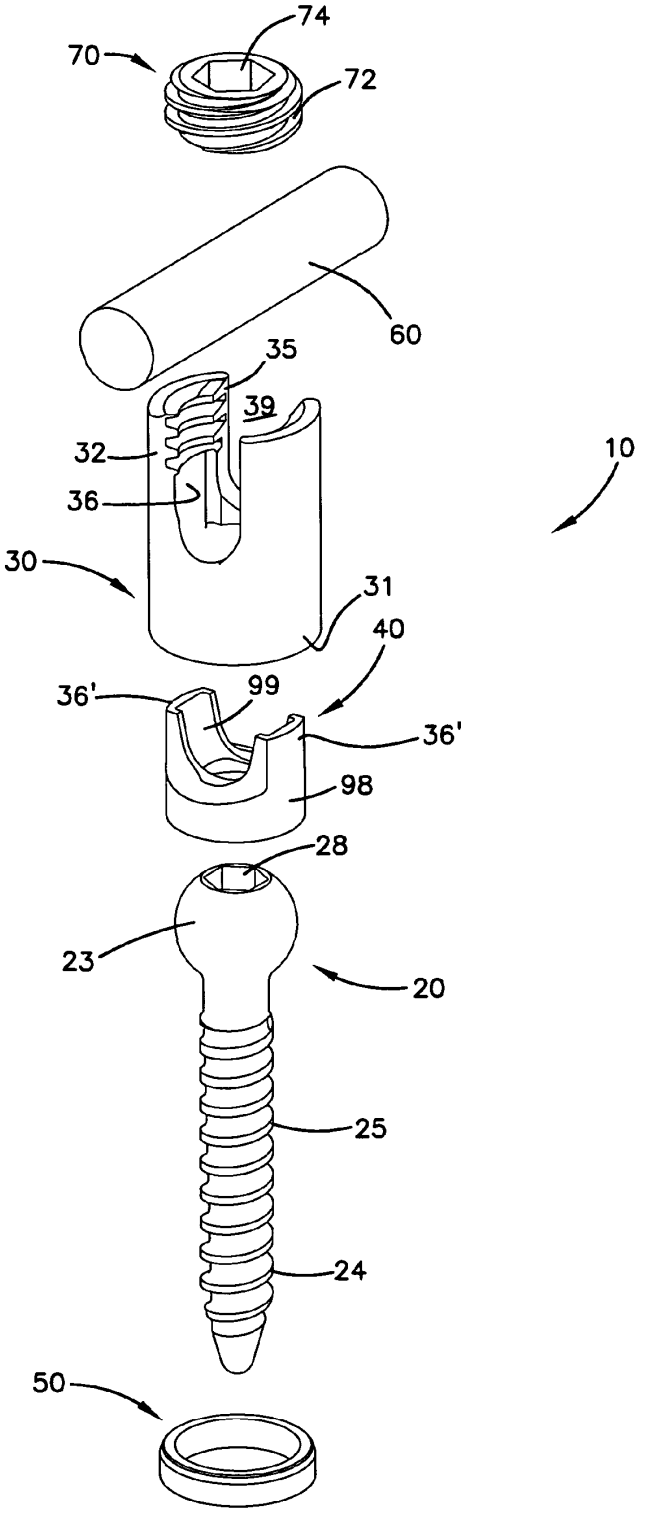

FIG.2

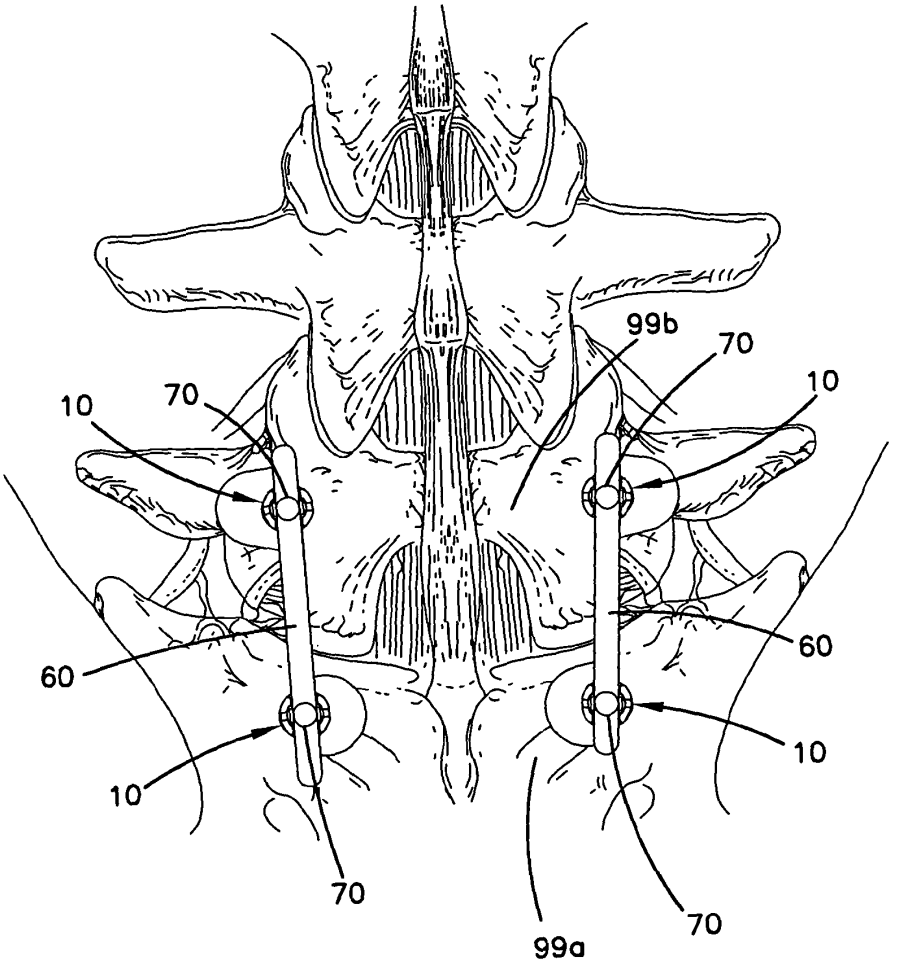

FIG.3

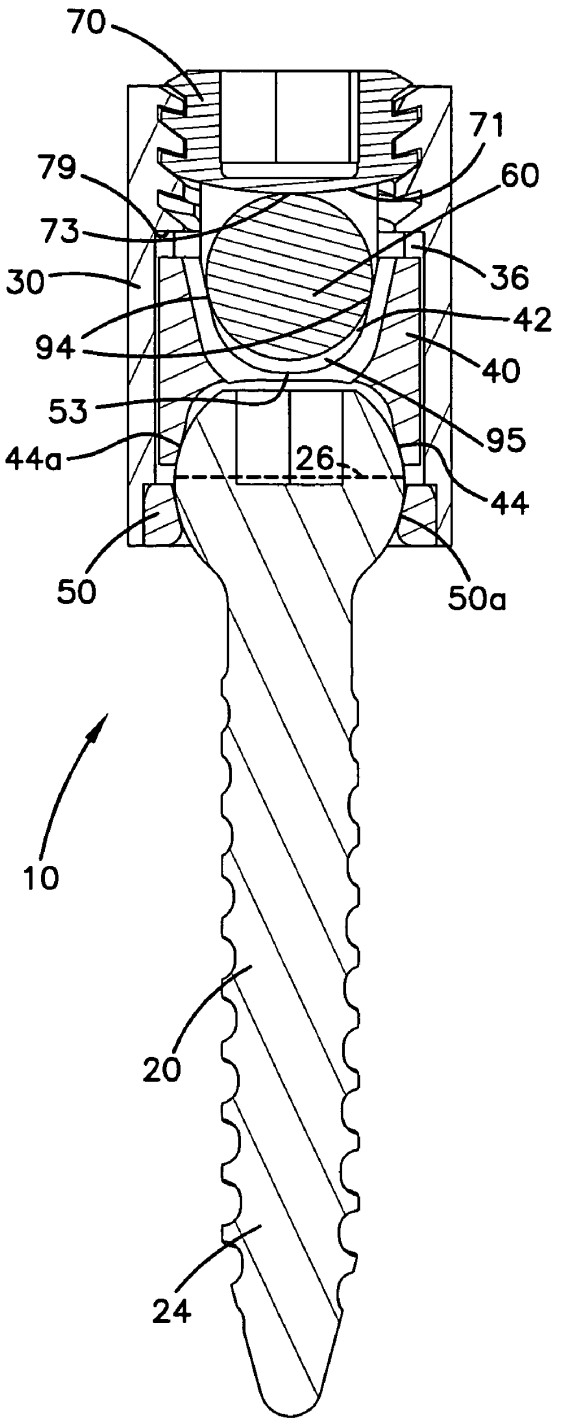

FIG.4

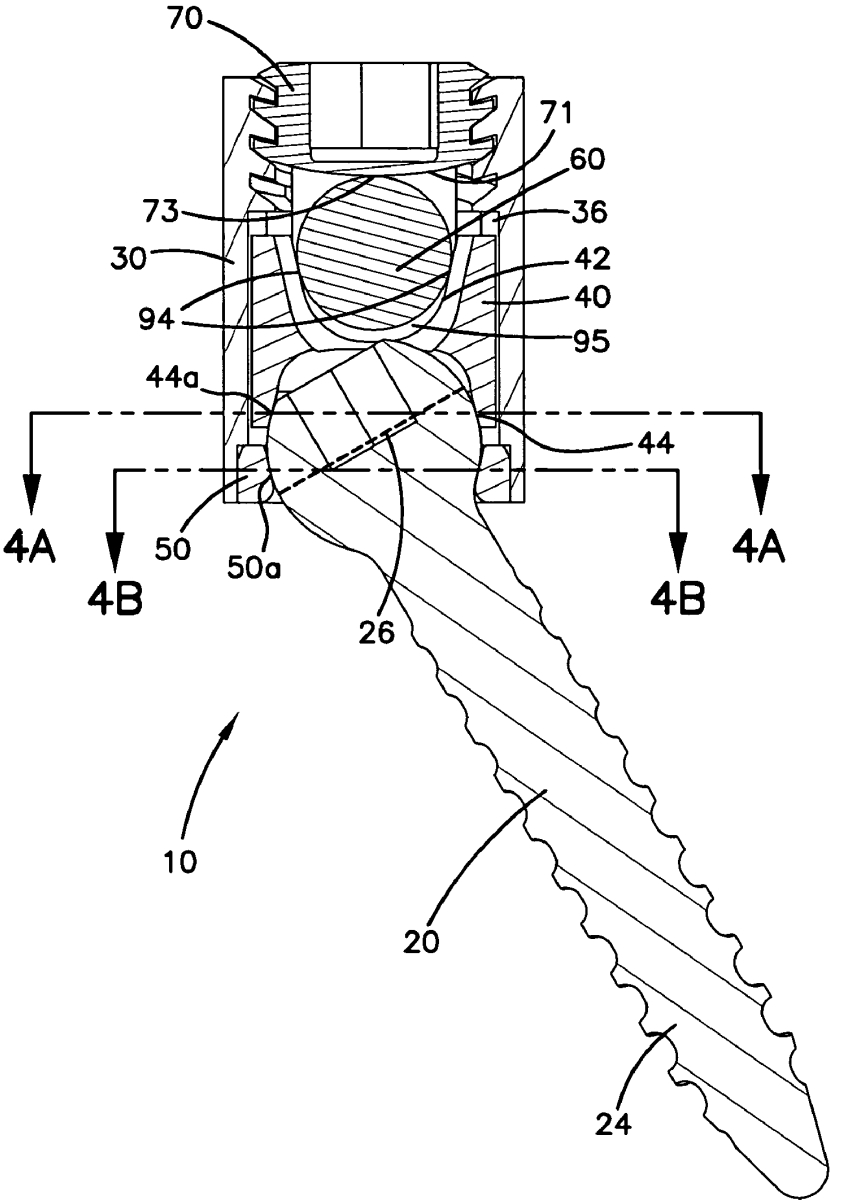

FIG.4A

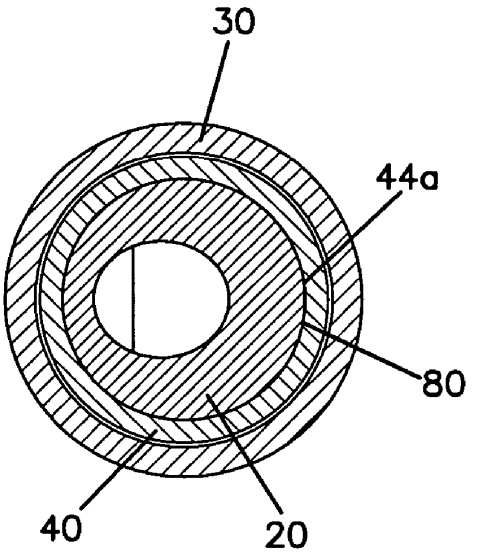

FIG.4B

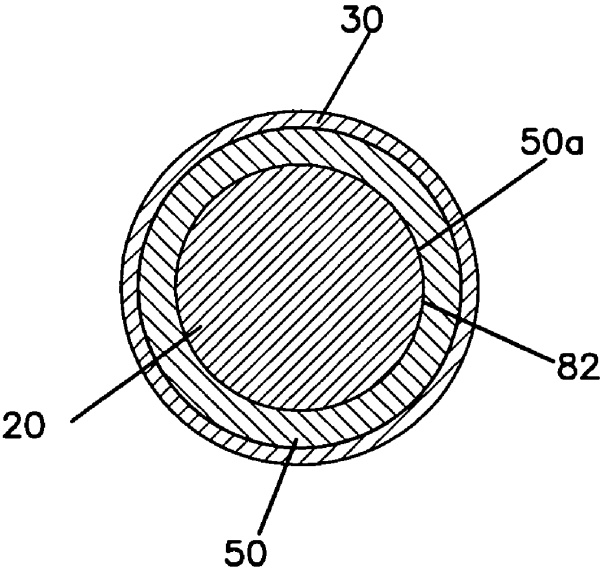

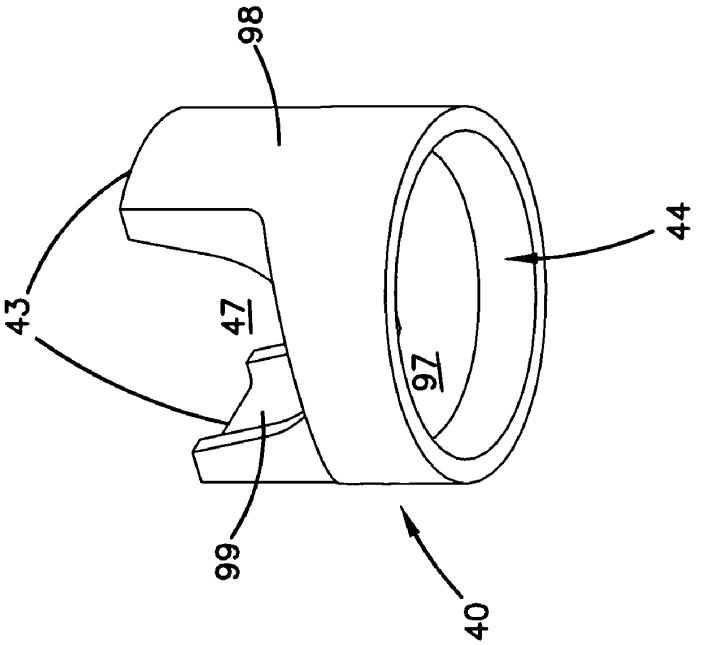

FIG.6

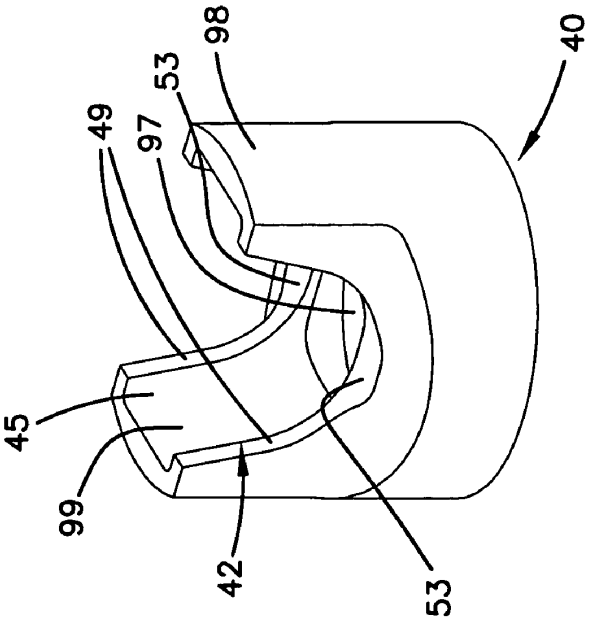

FIG.5

FIG.7

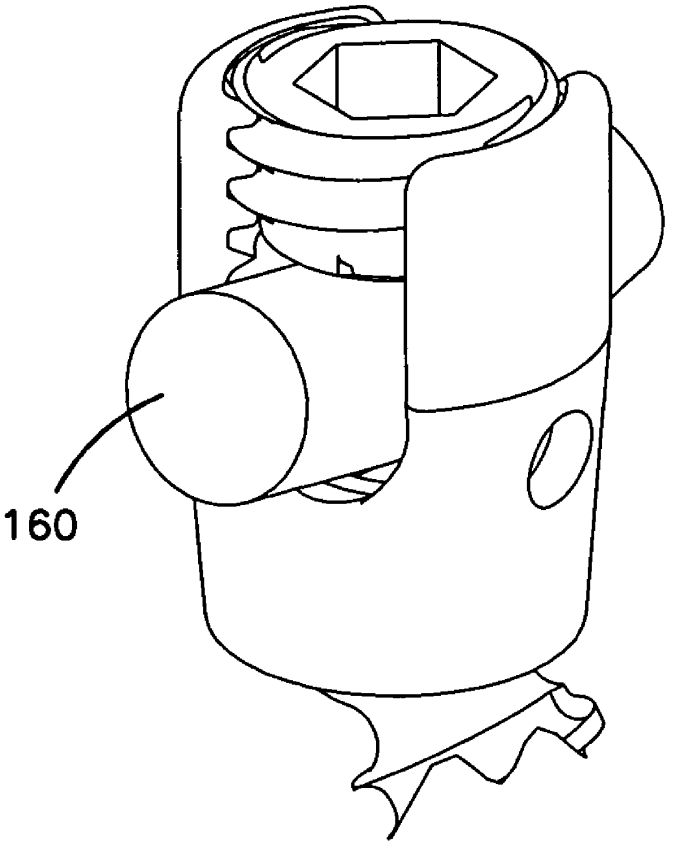

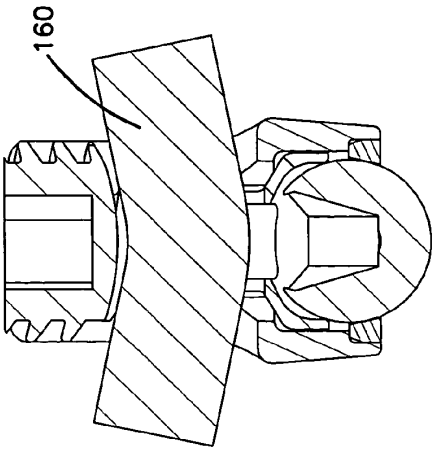

FIG.10

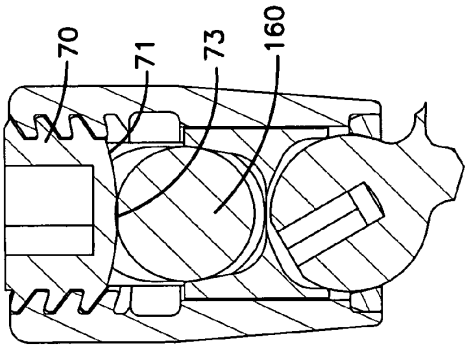

FIG.9

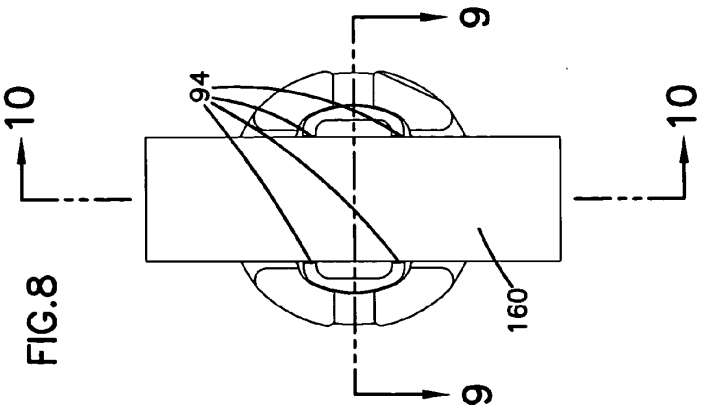

FIG.8

FIG. 11

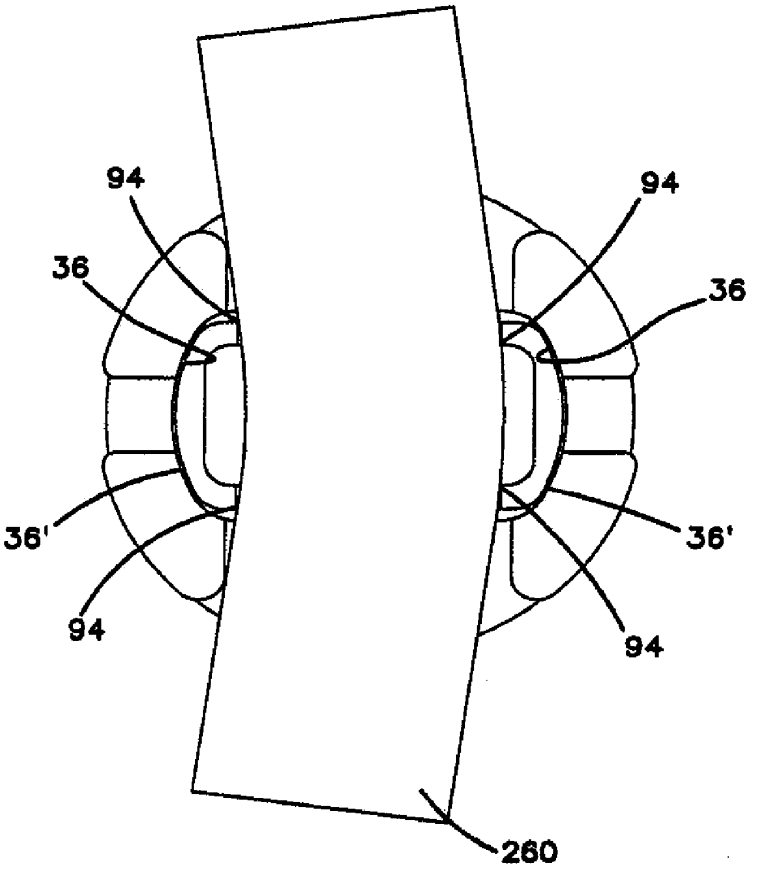

FIG.12

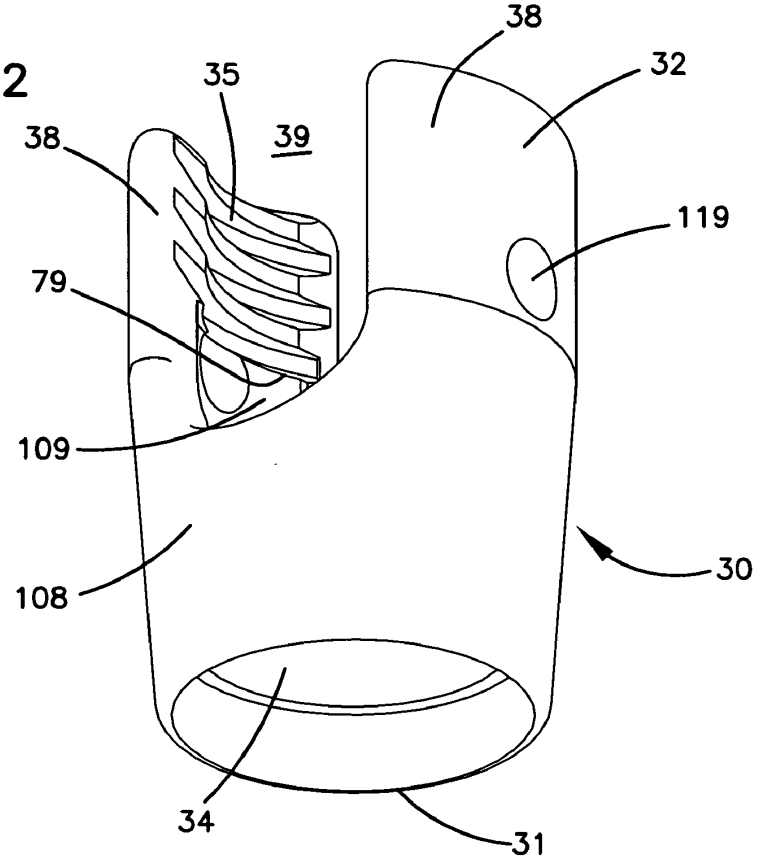

FIG.13

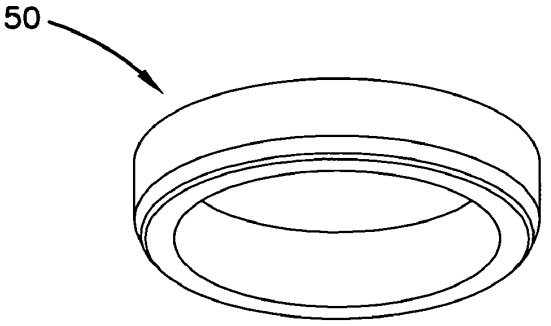

FIG.14

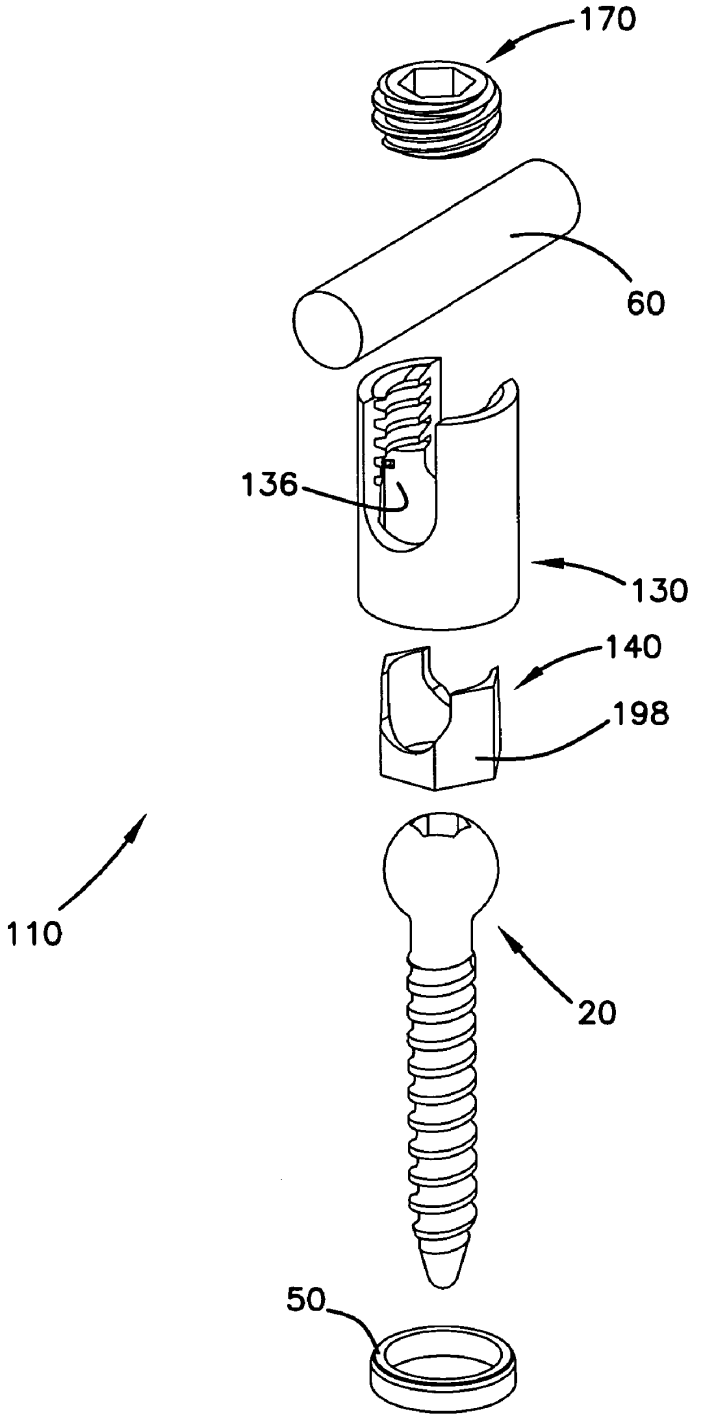

FIG. 15

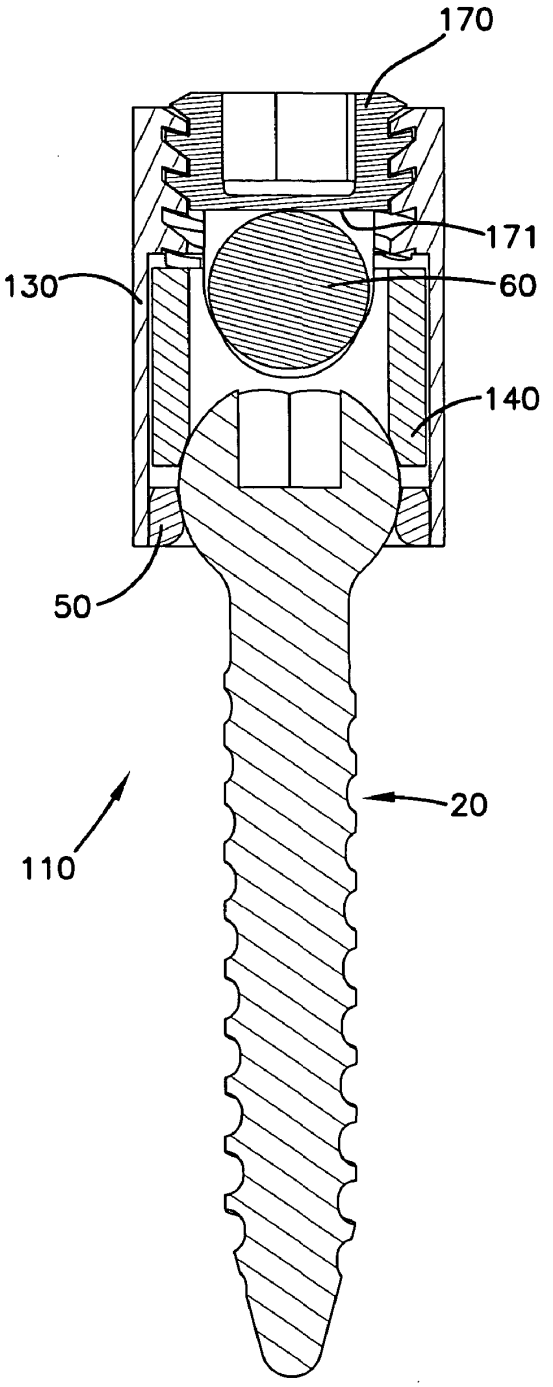

FIG.16

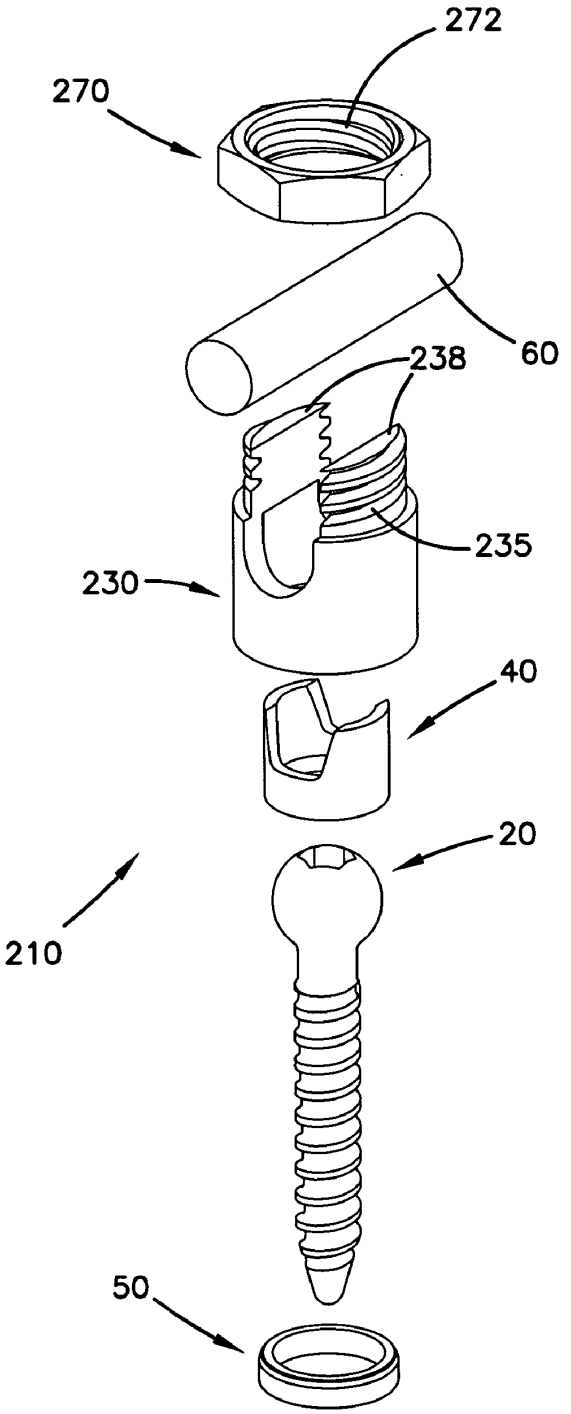

FIG.17

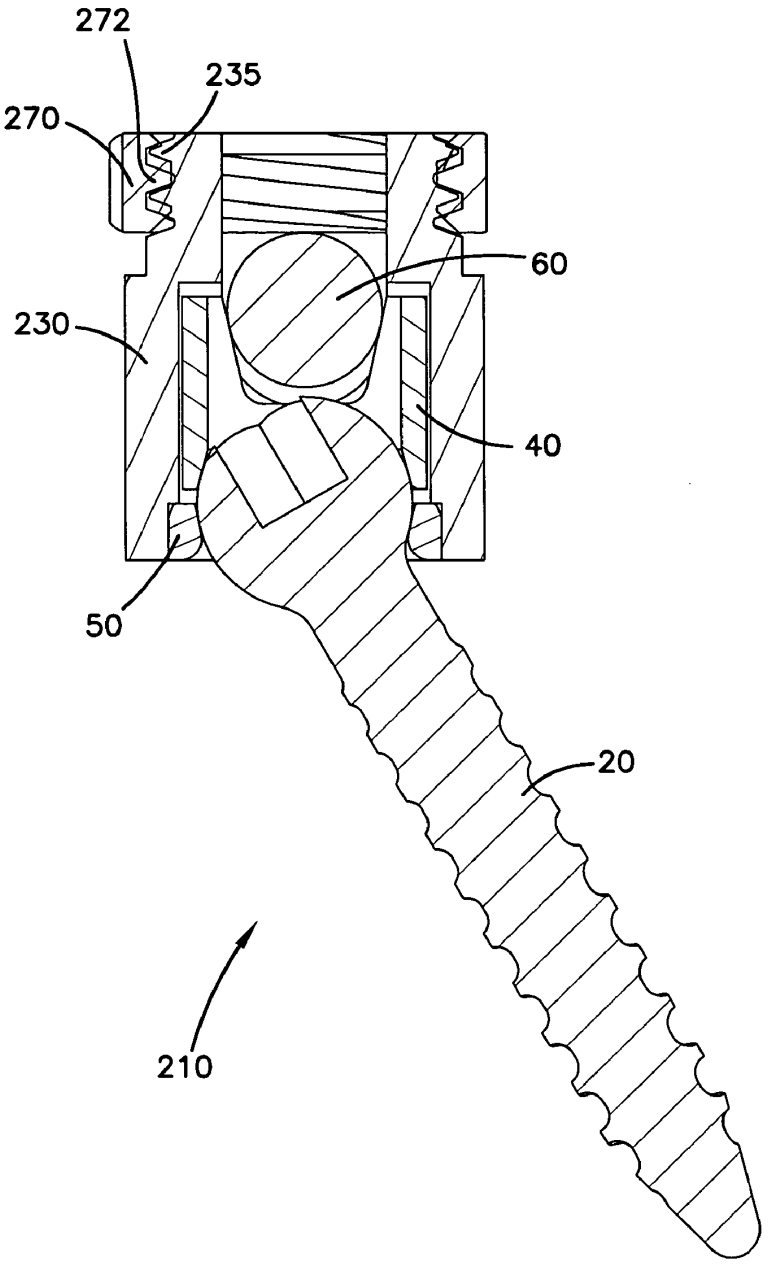

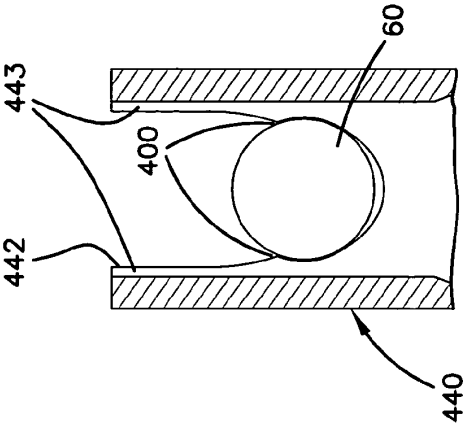

FIG.20

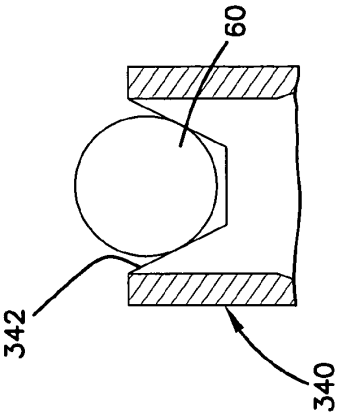

FIG.19

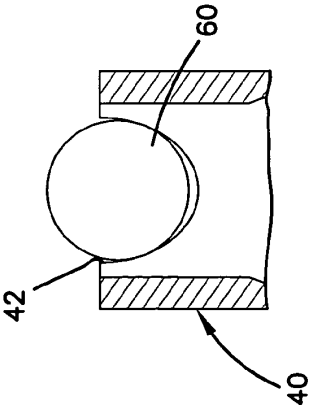

FIG.18

FIG.21

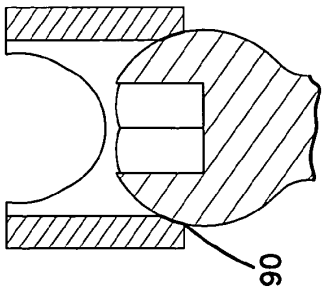

FIG.22

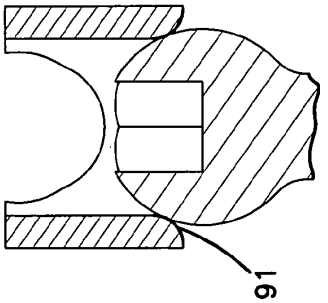

FIG.23

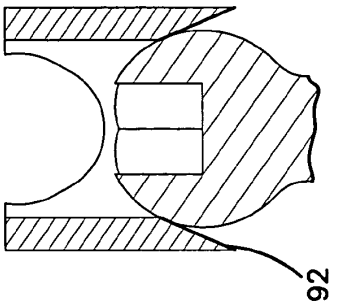

FIG.24

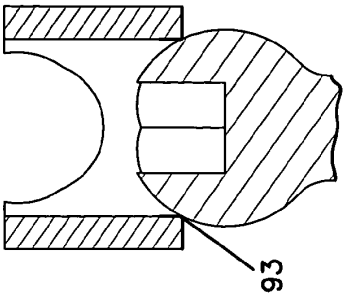

SPINAL IMPLANT FIXATION ASSEMBLY

TECHNICAL FIELD

This invention pertains to vertebral stabilization. Specifically, the invention provides intervertebral connection systems suited for stabilization of the spine.

BACKGROUND

The spinal column is a highly complex system of bones and connective tissues that provides support for the body and protects the delicate spinal cord and nerves. The spinal column includes a series of vertebrae stacked one atop the other, each vertebral body including an inner or central portion of relatively weak cancellous bone and an outer portion of relatively strong cortical bone. Situated between each vertebral body is an intervertebral disc that cushions and dampens compressive forces experienced by the spinal column. A vertebral canal containing the spinal cord and nerves is located behind the vertebral bodies.

There are many types of spinal column disorders including scoliosis (abnormal lateral curvature of the spine), kyphosis (abnormal forward curvature of the spine, usually in the thoracic spine), excess lordosis (abnormal backward curvature of the spine, usually in the lumbar spine), spondylolisthesis (forward displacement of one vertebra over another, usually in a lumbar or cervical spine) and other disorders caused by abnormalities, disease or trauma, such as ruptured or slipped discs, degenerative disc disease, fractured vertebra, and the like. Patients that suffer from such conditions usually experience extreme and debilitating pain, as well as diminished nerve function.

The present invention generally involves a technique commonly referred to as spinal fixation whereby surgical implants are used for fusing together and/or mechanically immobilizing vertebrae of the spine. Spinal fixation may also be used to alter the alignment of adjacent vertebrae relative to one another so as to change the overall alignment of the spine. Such techniques have been used effectively to treat the above-described conditions and, in most cases, to relieve pain suffered by the patient. However, as will be set forth in more detail below, there are some disadvantages associated with current fixation devices.

One spinal fixation technique involves immobilizing the spine by using orthopedic rods, commonly referred to as spine rods, that run generally parallel to the spine. This may be accomplished by exposing the spine posteriorly and fastening bone screws to the pedicles of the appropriate vertebrae. Clamping elements adapted for receiving a spine rod therethrough are then used to join the spine rods to the screws. The aligning influence of the rods forces the spine to conform to a more desirable shape. In certain instances, the spine rods may be bent to achieve the desired curvature of the spinal column. Some examples of such spinal stabilization systems are disclosed in U.S. Pat. Nos. 6,074,391; 6,488,681; 6,280,442; 5,879,350; 6,371,957 B1; 6,355,040; 5,882,350; 6,248,105; 5,443,467; 6,113,601; 5,129,388; 5,733,286; 5,672,176; and 5,476,464, the entire disclosures of which are incorporated herein by reference.

U.S. Pat. No. 5,129,388 to Vignaud et al. discloses a spinal fixation device including a pedicle screw having a U-shaped head rigidly connected to an upper end of the screw. The U-shaped head includes two arms forming a U-shaped channel for receiving a spine rod therein. The U-shaped head is internally threaded so that a set screw having external threads may be screwed therein. After the pedicle screw has been inserted into bone and a spine rod positioned in the U-shaped channel, the set screw is threaded into the internal threads of the U-shaped channel for securing the spine rod in the channel and blocking relative movement between the spine rod and the pedicle screw.

Surgeons have encountered considerable difficulty when attempting to insert spinal fixation devices such as those disclosed in the above-mentioned '388 patent. This is because the U-shaped heads of adjacent screws are often out of alignment with one another due to curvature in spines and the different orientations of the pedicles receiving the screws. As a result, spine rods must often be bent in multiple planes in order to pass the rods through adjacent U-shaped channels. These problems weaken the strength of the assembly and result in significantly longer operations, thereby increasing the likelihood of complications associated with surgery.

In response to the above-noted problems, U.S. Pat. No. 5,733,286 to Errico et al., U.S. Pat. No. 5,672,176 to Biedermann et al., and U.S. Pat. No. 5,476,464 to Metz-Stavenhagen disclose polyaxial spinal fixation devices wherein the anchoring element fixed to the bone has a spherically-shaped head. The fixation devices in the above-identified patents also have orthopedic rod capturing assemblies for securing orthopedic rods in the capturing assemblies and connecting the rods with the anchoring elements. The spherically shaped heads of the anchoring elements permit movement of the anchoring elements relative to the orthopedic rod capturing assemblies.

There is a need for a screw head securing mechanism or device that provides a strong, effective, and secure lock of the screw head in its desired position. Additionally, there is a need for a screw head securing mechanism or device that is minimal in size and has a reduced amount of components to provide for a simpler, more effective, and less cumbersome device for fixing screws. Moreover, there is a need for a device adapted to more easily receive curved rods.

SUMMARY

One inventive aspect of the disclosure relates to providing orthopedic fixation systems for securing a rod to a bone with means for receiving curved rods.

Another inventive aspect of the disclosure relates to orthopedic fixation systems that secure polyaxial anchors by providing substantially full rings of contact with the heads of the anchors regardless of the angular orientations of the anchors.

Yet another aspect of the disclosure relates to providing orthopedic fixation systems for securing a rod to a bone including receivers and seat structures mounted within the receivers, wherein the receivers and the seat structures include relative anti-rotation features.

It should be noted that, at various locations throughout the specification, guidance is provided through lists of examples. The examples are for illustrative purposes and are not intended to limit the scope of the invention.

BRIEF DESCRIPTION OF THE DRAWINGS

FIG. **1** is an exploded perspective view of an orthopedic fixation device having features that are examples of inventive aspects in accordance with the principles of the present disclosure;

FIG. **2** is a top plan view of a stabilization construct including fixation devices of the type shown in FIG. **1**, the stabilization construct is shown mounted on the vertebrae from a posterior approach;

FIG. **3** is a cross-sectional view of the orthopedic fixation device of FIG. **1** taken along a vertical cross-sectional plane

that bisects the device, the device is shown with a rod in a locked position within a receiver of the device;

FIG. **4** is another cross-sectional view of the orthopedic fixation device of FIG. **1** showing the polyaxial anchor at an angled orientation relative to the receiver;

FIG. **4**A is a cross-sectional view of the orthopedic fixation device of FIG. **1** taken along section-line **4**A-**4**A of FIG. **4**;

FIG. **4**B is a cross-sectional view of the orthopedic fixation device of FIG. **1** taken along section-line **4**B-**4**B of FIG. **4**;

FIG. **5** is a top, perspective view of a seat structure of the orthopedic fixation device of FIG. **1**;

FIG. **6** is a bottom, perspective view of the seat structure of the orthopedic fixation device of FIG. **1**;

FIG. **7** is a perspective view of the orthopedic fixation device of FIG. **1** with a bent rod secured therein, the rod has an anterior-posterior curvature;

FIG. **8** is a top view of the orthopedic fixation device of FIG. **7** with the locking plug removed to better depict the interior of the receiver;

FIG. **9** is a cross-sectional view taken along section-line **9**-**9** of FIG. **8**;

FIG. **10** is a cross-sectional view taken along section line **10**-**10** of FIG. **8**;

FIG. **11** is a top view of the orthopedic fixation device of FIG. **1** with a bent rod mounted therein, the bent rod has a lateral curvature;

FIG. **12** is a bottom, perspective view of a receiver of the orthopedic fixation device of FIG. **1**;

FIG. **13** is a perspective view of a retainer of the orthopedic fixation device of FIG. **1**;

FIG. **14** is an exploded perspective view of a second embodiment of an orthopedic fixation device having features that are examples of inventive aspects in accordance with the principles of the present disclosure;

FIG. **15** is a cross-sectional view of the orthopedic fixation device of FIG. **14** taken along a vertical cross-sectional plane that bisects the device, the device is shown assembled with a rod secured within a receiver of the device;

FIG. **16** is an exploded perspective view of a third embodiment of an orthopedic fixation device having features that are examples of inventive aspects in accordance with the principles of the present disclosure;

FIG. **17** is a cross-sectional view of the orthopedic fixation device of FIG. **16** taken along a vertical cross-sectional plane that bisects the device, the device is shown assembled with a rod secured within a receiver of the device;

FIG. **18** is a cross-sectional view of the seat of orthopedic fixation device of FIG. **1** showing the rod seated at the top side of the seat;

FIG. **19** is a cross-sectional view of another embodiment of a seat having features that are examples of inventive aspects disclosed herein, the seat has a modified top side for seating the rod;

FIG. **20** is a cross-sectional view of another embodiment of a seat having features that are examples of inventive aspects disclosed herein, the seat includes tabs for provisionally retaining the rod at the top of the seat;

FIG. **21** is a cross-sectional view of the seat of the orthopedic fixation device of FIG. **1**, an anchor head is shown seated at the bottom of the seat;

FIG. **22** is a cross-sectional view of another embodiment of a seat having a modified surface for seating the anchor head;

FIG. **23** is a cross-sectional view of a further embodiment of a seat having a modified surface for seating the anchor head; and

FIG. **24** is a cross-sectional view of still another embodiment of a seat having a modified surface for seating the anchor head.

DETAILED DESCRIPTION

The invention will now be described by reference to the several drawing figures. The functional features of the invention can be embodied in any number of specific configurations. It will be appreciated, however, that the illustrated embodiments are provided for descriptive purposes and should not be used to limit the invention.

FIG. **1** illustrates one embodiment of an orthopedic fixation device **10** having features that are examples of inventive aspects in accordance with the principles of the present disclosure. The fixation device **10** includes a receiver **30** having a top portion **32** defining a saddle **39** (i.e., a pocket) for receiving a rod **60**, and a bottom portion **31** adapted for receiving a head **23** of a bone fastener such as a bone screw **20**. The fixation device **10** also includes a seat structure **40** that mounts within the receiver **30** between the rod **60** and the head **23** of the screw **20**. The seat structure **40** and the head **23** of the screw **20** are bottom loaded into the bottom portion **31** of the receiver **30**, and then captured within the receiver **30** by a retainer **50** (e.g., a retaining ring) secured to the bottom end of the receiver **30**. The fixation device **10** further includes a fastener such as a setscrew **70** for clamping the rod **60** within the saddle **39** of the receiver **30**.

In general use, a plurality of the fixation devices **10** are anchored to bones such as vertebral bodies **99***a*, **99***b* (shown at FIG. **2**) desired to be stabilized. The fixation devices can be anchored to the vertebral bodies **99***a*, **99***b* by threading the bone screws **20** into the vertebral bodies **99***a*, **99***b*. Torque for driving the screws **20** can be provided by a tool (e.g., a torque wrench or screw driver) inserted through the receivers **30** and into sockets **28** (e.g., hex-sockets) provided in the heads **23** of the screws **20**. By threading the screws **20** into the vertebral bodies **99***a*, **99***b*, the screws **20** function to couple the receivers **30** to the vertebral bodies **99***a*, **99***b* as shown at FIG. **2**. After coupling the receivers **30** to the vertebral bodies **99***a*, **99***b* with the screws, the vertebral bodies **99***a*, **99***b* can be distracted apart, compressed together or otherwise moved to a desired relative positioning. Rods **60** can then be mounted within the receivers **30** as shown in FIG. **2**. The polyaxial configuration of the bone screws **20** allow the receivers **30** to pivot relative to the bone screws **20** to facilitate inserting the rods **60** in the saddles **39** of the receivers **30**. Once the rods **60** are inserted within the receivers **30**, the setscrews **70** are threaded into the saddles **39** thereby forcing the rods **60** to seat against the top sides of the seat structures **40**. Continued tightening of the setscrews **70** forces the seat structures **40** downwardly within the receivers **30** causing the heads **23** of the bone screws **20** to be clamped between the bottom sides of the seat structures **40** and the retainers **50**, and also causing the rods **60** to be clamped between the setscrews **70** and the top sides of the seat structures **40**. The rods **60** are preferably clamped with sufficient force to prevent the rods **60** from sliding relative to the receivers **30**, and the screw heads **23** are preferably clamped with sufficient force to prevent the screw heads **23** from pivoting relative to the receivers **30**. In this manner, the rods **60** and the fixation devices **10** cooperate to form a stabilizing construct or framework that braces the vertebral bodies **99***a*, **99***b* to maintain the desired spatial relationship between the vertebral bodies **99***a*, **99***b*.

Referring to FIG. **1**, the screw **20** of the fixation device **10** includes a bone engaging end **24** and a generally spherical head **23**. The bone-engaging end **24** preferably includes exter-

nal threads **25** adapted to allow the screw **20** to be screwed into bone material. The spherical head **23** includes a major diameter **26** sized such that the spherical head **23** can be loaded into the receiver **30** from the bottom end of the receiver **30**. The spherical head **23** is shaped to allow a polyaxial freedom of movement for the screw **20**. In this manner, the screw **20** can have a range of motion throughout a 360-degree pattern from a longitudinal axis of the receiver **30**. Polyaxial freedom of movement of the screw **20** provides the surgeon with a wide range of placement angles, thereby facilitating the rod placement process.

FIGS. **5** and **6** are perspective views of the seat structure **40** of the orthopedic fixation device of FIG. **1**. The seat structure **40** includes a top seat **42** for receiving the rod **60**, a bottom seat **44** for receiving the head **23** of the screw **20** and a through-hole **97** communicating between the top seat **42** and the bottom seat **44**. The seat structure **40** also includes an exterior surface **98** and an interior surface **99**. The seat structure **40** is shaped and sized to be inserted into the receiver **30** through the bottom end of the receiver **30**.

The top seat **42** of the seat structure **40** includes two legs **43** defining a pocket **47**. The top seat **42** also includes first and second raised rod contacting structures such as ridges **49** that are spaced apart from one another. Each of the legs **43** defines a recessed portion **45** in the interior surface **99** extending between the two ridges **49**.

As illustrated in FIGS. **3** and **4**, each of the ridges **49** provides two contact locations **94** on the sides of the rod **60**. Non-contact areas **95** are defined between the bottom of the rod **60** and the bottom **53** of the pocket **47**. The non-contact areas **95** are provided by sizing the rod radius of curvature larger than the pocket radius of curvature.

The non-contact area **95**, the recessed portions **45** between the ridges **49** and the location of the through-hole **97** are configured to facilitate seating of the bent rods by providing open regions for accommodating the curvatures of the rods. FIGS. **7-10** show a rod **160** having an anterior-posterior curvature. Means for accommodating this curvature while maintaining secure contact is provided by the ridges **49** and the clearance provided by the non-contact areas **95** and the through hole **97** between the ridges. FIG. **11** shows a rod **260** having a lateral curvature. Means for accommodating this curvature while maintaining secure contact is provided by the ridges **49** and the recessed portions **45** between the ridges **49**. As shown at FIG. **11**, the ridges provide four discrete contact locations **94** while the recessed portions **45** provide clearance for accommodating the lateral curvature of the rod.

The rod contacting structures **49** are adapted to form four separate contact areas **94** with a rod regardless of which way the rod has been bent. In this manner, the rod contacting structures **49** provide stability to any rod that has been seated on the top seat **42** regardless of the rod's curvature. Corrective manipulations may be done to the rod while the rod is at rest on the top seat **42**.

As shown in FIGS. **5** and **6**, the bottom seat **44** of the seat structure **40** is adapted to receive the head **23** of the screw **20**. After the seat structure **40** has been inserted within the receiver **30**, the bottom seat **44** is adapted to contact the spherical head **23** of the screw **20** when the screw **20** is inserted within the receiver **30** from the bottom end of the receiver **30**.

The bottom seat **44** of the seat structure includes an annular seating surface **44***a* having a curvature that generally matches the curvature of the exterior surface of the head **23** of the screw **20**. The seating surface **44***a* faces in a generally downward direction and is adapted to provide a full ring of contact **80** (shown in FIG. **4**A) with the head **23** throughout the range of pivotal movement of the screw **20** relative to the receiver **30**. When the fixation device is tightened as shown in FIGS. **3** and **4**, the seating surface **44***a* presses down on the screw head **23** to clamp the screw at the desired angular position. During the clamping process, the surface **44***a* maintains the substantially full ring contact **80** with the spherical head **23** of the screw **20** regardless of the angular orientation of the screw **20** relative to the receiver **30** such that the screw is securely clamped at the desired angular orientation relative to the receiver **30**.

FIG. **12** illustrates the receiver **30** of the orthopedic fixation device **10** of FIG. **1**. The receiver **30** includes an outer surface **108**, and an inner surface **109**. The receiver **30** also includes a throughhole **34** extending vertically from the top portion **32** to the bottom portion **31** of the receiver **30**. As illustrated in FIG. **12**, the receiver **30** may also include grasping features **119** on the outer surface **108** that would accommodate instrumentation to facilitate grasping, holding or manipulating of the receiver **30**.

The receiver **30** includes two upwardly extending legs **38** between which the saddle **39** of the receiver **30** is defined. The saddle **39** of the receiver **30** provides an open region or pocket for receiving the rod **60**. The legs **38** also preferably include fastening structure for interconnecting with the setscrew **70**. For example, the legs **38** are shown defining interior threads **35** that mate with corresponding exterior threads **72** of the setscrew **70** to allow the setscrew **70** to be threaded into the saddle **39** to lock the rod **60** and screw in place.

The seat structure **40** is configured to be bottom-loaded into the receiver **30**. When the seat structure **40** is bottom-loaded into the receiver **30**, the seat structure **40** is prevented from being pushed upwardly through the top end of the receiver **30** by a stop structure **79**.

The receiver **30** may include a keying feature **36** for aligning the seat structure **40** in the correct rotational orientation relative to the receiver **30** during insertion. The keying structure **36** can also limit rotation of the seat structure **40** relative to the receiver **30** once inserted. As used herein, the term "limit" can mean either prevent rotation or limit rotation to a certain range. In FIG. **1**, the keying feature **36** is depicted as opposing internal slots **36** defined along the inner surface **109**. The internal slots **36** have generally rectangular shapes and are configured to complement and receive corresponding rectangular shape structures **36'** provided at the exterior **98** of the seat structure **40**. The internal slots **36** are used to align the pockets **47** of the seat structure **40** with the saddle **39** of the receiver **30**. It will be understood that other types of keying features (e.g., tabs, notches, polygonal shapes, slots, flats, or other structures) can be utilized to correctly align the seat structure relative to the receiver within the spirit of the invention.

Referring to FIG. **13**, the retainer **50** (e.g., a ring) of the orthopedic fixation device **10** of FIG. **1** is shown. The ring **50** is adapted to be coupled (e.g., welded, bonded, swaged, snap-fit, threaded, press-fit or otherwise secured) to the bottom of the receiver **30** after the seat structure **40** and the head **23** of the screw **20** have been inserted within the receiver **30**. The ring **50**, once coupled, captures and retains the head **23** of the screw **20** within the bottom portion of the receiver **30** (see FIGS. **3** and **4**). The retainer **50** includes an annular seating surface **50***a* that faces in a generally upward direction an includes a curvature that generally complements the curvature of the exterior of the screw head **23**. The seating surface **50***a* is adapted to provide substantially full ring contact **82** (shown in FIG. **4**B) with the head **23** of the screw **20** regardless of the angular orientation of the screw **20** relative to the receiver **30**. In this manner, when the setscrew **70** is fully

tightened, the seating surface **44***a* of the seat structure **40** and the seating surface **50***a* of the ring **50** cooperate to provide two substantially full rings of contact **80** and **82** (shown in FIGS. **4**A and **4**B) between which the spherical head **23** of the screw **20** is captured and clamped to lock the head **23** at a desired angular position relative to the receiver **30**.

In use, the setscrew **70** provides an axial locking force on the rod **60**. When contacted by the setscrew **70**, the rod **60** is caused to axially apply a force on the seat structure **40**. The seat structure **40**, in turn, moves to create a clamping effect on the spherical head **23** of the bone screw **20** against the ring **50** coupled to the bottom end **31** of the receiver **30**. When the setscrew **70** is fully tightened, the rod **60** is locked between the setscrew **70** and the seat structure **40**, and the screw head **23** is locked between the seat structure **40** and the retainer **50**.

As illustrated in FIGS. **3** and **4**, the setscrew **70** may include a curved bottom surface **71**. With this configuration, the setscrew **70** contacts the rod **60** at a single point of contact **73**. This feature provides stability to a rod that has been bent upwardly when it is seated on the top seat **42** of the seat structure **40**. The threads **72** of the setscrew **70** can also be designed with a double lead to allow the setscrew **70** to start more easily than with a single lead. Torque for driving the setscrew **70** can be provided by a tool (e.g., a torque wrench) inserted into sockets **74** (e.g., hex-sockets) provided in the setscrews **70**.

FIGS. **14** and **15** illustrate a second embodiment of orthopedic fixation device **110** having features that are examples of inventive aspects in accordance with the principles of the present disclosure. The orthopedic fixation device **110** includes a seat structure **140**. The seat structure **140** is similar to the embodiment of FIG. **1**, except that the seat structure **140** includes an exterior surface **198** of a hexagonal cross-sectional profile. The device **110** also includes a receiver **130** with an internal hexagonal cross-sectional shape **136** configured to match the shape of the exterior **198** of the seat structure **140**. The matching shapes provide a keying function to ensure the seat structure **140** is inserted into the receiver **130** at the appropriate rotational orientation, and also limit the rotation of the seat structure **140** within the receiver **130**. The device **110** also includes a setscrew **170** having a flat bottom surface **171** for contacting the rod **60** when the rod is clamped within the device **110**.

FIGS. **16** and **17** illustrate a third embodiment of orthopedic fixation device **210** having features that are examples of inventive aspects in accordance with the principles of the present disclosure. The device **210** is similar to the embodiment of FIG. **1**, except has been modified to include a different top locking arrangement. The locking arrangement of the fixation device **210** includes a fastener in the form of a lock nut **270** that mounts on a receiver **230**. The lock nut **270** is adapted to be threaded about the exterior of legs **238** of the receiver **230**. The receiver **230** includes external threads **235** adapted to mate with internal threads **272** of the nut **270**. The nut **270** can also be designed with a double lead as previously discussed for the set screw type of a locking mechanism to facilitate start-up.

The embodiments of the locking arrangements disclosed herein (e.g., the set screw **70** and the nut **270**) are merely examples of types of locking arrangements that can be used. The locking arrangements can include any mechanism adapted to provide an axial locking force on the rod **60** to cause it to provide a force on the seat structure **40**, thereby, causing it to move and create a clamping effect on the spherical head **23** of the bone screw **20** against the retainer **50**. Example structures include lock nuts, screws, collars, plugs, sleeves, tapered sleeves, tapered plugs or other structures. Torque or non-torque locking mechanisms may be utilized for the orthopedic fixation system.

The rod seat **42** of the seat structure **40** is preferably generally U-shaped as shown in FIG. **18**. However, the shape can be varied. For example, FIG. **19** shows a seat structure **340** having a truncated V-shaped seat **342**. FIG. **20** shows a seat structure **440** having a rod seat **442** formed by opposing legs **443**. The seat structure **440** also includes provisional retaining tabs **400** adapted to provisionally retain the rod **60** between the legs **443** after the rod **60** is snapped past the tabs **400** during insertion. In this embodiment, the legs **443** are adapted to deflect (e.g. flex apart) to accommodate the rod **60** and then move inwardly back toward the non-deflected orientation such that the tabs **400** provisionally retain the rod **60** within the seat. When provisionally retained, the position of the rod can be readily adjusted. To remove the rod **60** from the pocket, the rod **60** is pulled upwardly with sufficient force to cause the legs **443** to deflect back apart thereby enabling the rod to pass between the tabs **400**. A fastener such as a lock nut, set screw or other fastener can be used to finally lock the rod within the seat structure once the rod has been adjusted to its final position.

To increase the contact surface and/or to vary the stresses between the bottom seat **44** of the seat structure **40** and the head **23** of the screw **20**, the seat/spherical head interface may include various cross-sectional shapes. For example, as shown in FIGS. **21-24**, the bottom seat may include a cupped cross-sectional shape **90**, a rounded cross-sectional shape **91**, a tapered cross-sectional shape **92** and a squared cross-sectional shape **93**, respectively, at the seat/head interface. The bottom seat may also include a cross-sectional shape at the seat/head interface that is made up of a combination of the shapes discussed.

The various components of the devices disclosed herein (e.g., the receivers, fasteners, anchors, retainers and seat structures) can be made of any number of different types of biocompatible materials. Example materials include materials such as Titanium, Nitinol, Stainless Steel, Thermoplastic polymers, Thermoset polymers as well as other materials.

As shown in the various embodiments depicted herein, the anchors of the fixation devices have been depicted as bone screws. In other embodiments, the anchors can include hooks, pins, expandable anchors, barbed anchors or other structures.

From the foregoing detailed description, it will be evident that modifications and variations can be made in the devices of the invention without departing from the spirit or scope of the invention. Therefore, it is intended that all modifications and variations not departing from the spirit of the invention come within the scope of the claims and their equivalents.

I claim:

1. An orthopedic fixation device comprising:

a receiver including first and second legs and a first pocket defined between the legs;

a rod having a curved portion;

an anchor including a head; and

a seat structure that mounts within the receiver, the seat structure including a top seat for receiving the rod and a bottom seat for receiving the head of the anchor, the top seat including first and second legs extending from a base of the top seat, the top seat including an interior defining a second pocket between the first and second legs configured to receive the rod therethrough;

the first leg of the seat structure having first and second raised ridges and a recessed portion extending between the first raised ridge and the second raised ridge facing the interior of the top seat, the recessed portion of the first leg extending to the topmost extent of the first and

second raised ridges of the first leg, each ridge including a discrete rod contact location disposed along a planar portion of the raised ridge for contacting the rod, and a rod non-contact area defined by the recessed portion of the first leg spaced from the rod;

the second leg of the seat structure having first and second raised ridges and a recessed portion extending between the first raised ridge and the second raised ridge facing the interior of the top seat, the recessed portion of the second leg extending to the topmost extent of the first and second raised ridges of the second leg, each ridge including a discrete rod contact location disposed along a planar portion of the raised ridge for contacting the rod, and a rod non-contact area defined by the recessed portion of the second leg spaced from the rod;

wherein the first raised ridge of the first leg deviates from the recessed portion of the first leg to extend toward the first raised ridge of the second leg, and the first raised ridge of the second leg deviates from the recessed portion of the second leg to extend toward the first raised ridge of the first leg, retaining a distance across the second pocket between the first raised ridge of the first leg and the first raised ridge of the second leg;

wherein the second raised ridge of the first leg deviates from the recessed portion of the second leg to extend toward the second raised ridge of the second leg, and the second raised ridge of the second leg deviates from the recessed portion of the second leg to extend toward the second raised ridge of the first leg, retaining a distance across the second pocket between the second raised ridge of the first leg and the second raised ridge of the second leg;

wherein a distance across the second pocket from the recessed portion of the first leg to the recessed portion of the second leg is greater than the distance across the second pocket between the first raised ridge of the first leg and the first raised ridge of the second leg;

wherein the distance across the second pocket from the recessed portion of the first leg to the recessed portion of the second leg is greater than the distance across the second pocket between the second raised ridge of the first leg and the second raised ridge of the second leg; and

wherein the seat structure is configured such that the rod is spaced from the base of the top seat when the rod is received in the second pocket and in contact with each of the discrete rod contact locations of the seat structure;

wherein the curved portion of the rod is disposed within the top seat such that the rod has a lateral curvature such that the rod curves toward the first leg of the receiver and curves away from the second leg of the receiver.

2. An orthopedic fixation device according to claim **1**, wherein the receiver includes a top and a bottom end and wherein the anchor is loaded through the bottom end of the receiver.

3. An orthopedic fixation device according to claim **1**, wherein the bottom seat provides substantially full ring contact with the head of the anchor regardless of the orientation of the anchor relative to the receiver.

4. An orthopedic fixation device according to claim **2**, wherein a ring is secured to the bottom end of the receiver to secure the head of the anchor within the receiver.

5. An orthopedic fixation device according to claim **4**, wherein the ring provides substantially full ring contact with the head of the anchor regardless of the orientation of the anchor relative to the receiver.

6. An orthopedic fixation device according to claim **1**, wherein the receiver includes a keying feature for limiting rotation of the seat structure relative to the receiver prior to the rod being secured to the device, the keying feature including an exterior-shape of the seat structure and an interior-shape of the receiver, wherein the exterior-shape of the seat structure matches the shape of the interior-shape of the receiver.

7. An orthopedic fixation device according to claim **2**, wherein the seat structure is loaded through the bottom end of the receiver.

8. An orthopedic fixation device according to claim **1**, further comprising a locking mechanism for securing the rod within the receiver.

9. An orthopedic fixation device according to claim **8**, wherein the locking mechanism includes a set screw threaded into the pocket of the receiver.

10. An orthopedic fixation device comprising:

a receiver including two legs and a first pocket defined between the legs;

a rod having a curved portion;

an anchor including a head;

a seat structure that mounts within the receiver, the seat structure including a top seat for receiving the curved portion of the rod and a bottom seat for receiving the head of the anchor;

the top seat including first and second legs extending from a base of the top seat, the top seat including an interior defining a second pocket between the first and second legs configured to receive the rod therethrough;

the first leg of the seat structure having first and second raised ridges and a recessed portion extending between the first raised ridge and the second raised ridge facing the interior of the top seat, the recessed portion of the first leg extending to the topmost extent of the first and second raised ridges of the first leg, each ridge including a discrete rod contact location disposed along a planar portion of the raised ridge for contacting the rod, and a rod non-contact area defined by the recessed portion of the first leg spaced from the rod;

the second leg of the seat structure having first and second raised ridges and a recessed portion extending between the first raised ridge and the second raised ridge facing the interior of the top seat, the recessed portion of the second leg extending to the topmost extent of the first and second raised ridges of the second leg, each ridge including a discrete rod contact location disposed along a planar portion of the raised ridge for contacting the rod, and a rod non-contact area defined by the recessed portion of the second leg spaced from the rod;

wherein the first raised ridge of the first leg deviates from the recessed portion of the first leg to extend toward the first raised ridge of the second leg, and the first raised ridge of the second leg deviates from the recessed portion of the second leg to extend toward the first raised ridge of the first leg, retaining a distance across the second pocket between the first raised ridge of the first leg and the first raised ridge of the second leg;

wherein the second raised ridge of the first leg deviates from the recessed portion of the second leg to extend toward the second raised ridge of the second leg, and the second raised ridge of the second leg deviates from the recessed portion of the second leg to extend toward the second raised ridge of the first leg, retaining a distance across the second pocket between the second raised ridge of the first leg and the second raised ridge of the second leg;

wherein a distance across the second pocket from the recessed portion of the first leg to the recessed portion of the second leg is greater than the distance across the second pocket between the first raised ridge of the first leg and the first raised ridge of the second leg; and

wherein the distance across the second pocket from the recessed portion of the first leg to the recessed portion of the second leg is greater than the distance across the

second pocket between the second raised ridge of the first leg and the second raised ridge of the second leg;

wherein the seat structure is configured such that the rod is spaced from the base of the top seat when the curved portion of the rod is received in the second pocket and in contact with each of the discrete rod contact locations of the seat structure, the curved portion of the rod curving laterally with a concave curvature facing the first leg and a convex curvature facing the second leg;

a ring secured to the receiver such that the head of the anchor is captured between the ring and the bottom seat of the seat structure;

the bottom seat providing substantially full ring contact with the head of the anchor throughout a range of pivotal movement of the anchor relative to the receiver; and

the ring providing substantially full ring contact with the head of the anchor throughout a range of pivotal movement of the anchor relative to the receiver.

11. An orthopedic fixation device according to claim **10**, wherein the receiver includes a top and a bottom end and wherein the anchor is loaded through the bottom end of the receiver.

12. An orthopedic fixation device according to claim **10**, wherein the receiver includes a keying feature for limiting rotation of the seat structure relative to the receiver, the keying feature including an exterior-shape of the seat structure and an interior-shape of the receiver, wherein the exterior-shape of the seat matches the shape of the interior-shape of the receiver.

13. An orthopedic fixation device according to claim **11**, wherein the seat structure is loaded through the bottom end of the receiver.

14. An orthopedic fixation device according to claim **10**, further comprising a locking mechanism for securing the rod within the receiver.

15. An orthopedic fixation device according to claim **14**, wherein the locking mechanism includes a set screw threaded into the pocket of the receiver.

16. An orthopedic fixation system comprising:

a rod including a curved section;

an anchor including a head;

a receiver including two legs and a first pocket defined between the legs;

a seat structure that mounts within the receiver, the seat structure including a top seat for receiving the curved section of the rod and a bottom seat for receiving the head of the anchor;

the top seat including first and second legs extending from a base of the top seat, the top seat including an interior defining a second pocket between the first and second legs configured to receive the rod therethrough;

the first leg of the seat structure having first and second raised ridges and a recessed portion extending between the first raised ridge and the second raised ridge facing the interior of the top seat, the recessed portion of the first leg extending to the topmost extent of the first and second raised ridges of the first leg, each ridge including a discrete rod contact location disposed along a planar portion of the raised ridge for contacting the rod, and a rod non-contact area defined by the recessed portion of the first leg spaced from the rod;

the second leg of the seat structure having first and second raised ridges and a recessed portion extending between the first raised ridge and the second raised ridge facing the interior of the top seat, the recessed portion of the second leg extending to the topmost extent of the first and second raised ridges of the second leg, each ridge including a discrete rod contact location disposed along a planar portion of the raised ridge for contacting the rod, and a rod non-contact area defined by the recessed portion of the second leg spaced from the rod;

wherein the first raised ridge of the first leg deviates from the recessed portion of the first leg to extend toward the first raised ridge of the second leg, and the first raised ridge of the second leg deviates from the recessed portion of the second leg to extend toward the first raised ridge of the first leg, retaining a distance across the second pocket between the first raised ridge of the first leg and the first raised ridge of the second leg;

wherein the second raised ridge of the first leg deviates from the recessed portion of the second leg to extend toward the second raised ridge of the second leg, and the second raised ridge of the second leg deviates from the recessed portion of the second leg to extend toward the second raised ridge of the first leg, retaining a distance across the second pocket between the second raised ridge of the first leg and the second raised ridge of the second leg;

wherein a distance across the second pocket from the recessed portion of the first leg to the recessed portion of the second leg is greater than the distance across the second pocket between the first raised ridge of the first leg and the first raised ridge of the second leg; and

wherein the distance across the second pocket from the recessed portion of the first leg to the recessed portion of the second leg is greater than the distance across the second pocket between the second raised ridge of the first leg and the second raised ridge of the second leg;

wherein the seat structure is configured such that the rod is spaced from the base of the top seat when the curved section of the rod is received in the second pocket and in contact with each of the discrete rod contact locations of the seat structure such that an edge having an inner concave radius of curvature of the curved section faces towards the first leg and contacts the first and second ridges of the first leg and an edge having an outer convex radius of curvature of the curved section faces toward the second leg and contacts the first and second ridges of the second leg;

a ring secured to the receiver such that the head of the anchor is captured between the ring and the bottom seat of the seat structure;

the bottom seat providing substantially full ring contact with the head of the anchor throughout a range of pivotal movement of the anchor relative to the receiver;

the ring providing substantially full ring contact with the head of the anchor throughout a range of pivotal movement of the anchor relative to the receiver; and

the receiver including a keying feature for limiting rotation of the seat structure relative to the receiver, the keying feature including an exterior-shape of the seat structure and an interior-shape of the receiver, wherein the exterior-shape of the seat structure matches the shape of the interior-shape of the receiver.

17. The orthopedic fixation device according to claim **1**, wherein the discrete rod contact locations are aligned generally perpendicular to the longitudinal axis of the rod and the seat structure.

18. The orthopedic fixation device according to claim **10**, wherein the discrete rod contact locations are aligned generally perpendicular to the longitudinal axis of the rod and the seat structure.

19. The orthopedic fixation system according to claim **16**, wherein the discrete rod contact locations are aligned generally perpendicular to the longitudinal axis of the rod and the seat structure.

* * * * *