US008911479B2

(12) **United States Patent**
Jackson et al.

(10) **Patent No.: US 8,911,479 B2**
(45) **Date of Patent: Dec. 16, 2014**

(54) **MULTI-START CLOSURES FOR OPEN IMPLANTS**

(71) Applicants: **Roger P. Jackson**, Prairie Village, KS (US); **James L. Surber**, Kansas City, KS (US)

(72) Inventors: **Roger P. Jackson**, Prairie Village, KS (US); **James L. Surber**, Kansas City, KS (US)

(*) Notice: Subject to any disclaimer, the term of this patent is extended or adjusted under 35 U.S.C. 154(b) by 0 days.

(21) Appl. No.: **13/694,849**

(22) Filed: **Jan. 10, 2013**

(65) **Prior Publication Data**

US 2013/0197585 A1 Aug. 1, 2013

Related U.S. Application Data

(60) Provisional application No. 61/631,746, filed on Jan. 10, 2012, provisional application No. 61/634,631, filed on Feb. 28, 2012.

(51) **Int. Cl.**
A61B 17/70 (2006.01)

(52) **U.S. Cl.**
CPC ***A61B 17/7035*** (2013.01); ***A61B 17/7032*** (2013.01)
USPC **606/278**

(58) **Field of Classification Search**
USPC 606/246, 264–273, 275, 278, 279, 305, 606/306, 308, 315, 316; 403/362; 411/393
See application file for complete search history.

(56) **References Cited**

U.S. PATENT DOCUMENTS

2,346,346	A	4/1944	Anderson
2,362,999	A	11/1944	Elmer
2,531,892	A	11/1950	Reese
2,813,450	A	11/1957	Dzus
3,013,244	A	12/1961	Rudy
4,033,139	A	7/1977	Frederick
4,759,672	A	7/1988	Nilsen et al.
4,771,905	A	9/1988	Perne et al.
4,790,297	A	12/1988	Luque
4,946,458	A	8/1990	Harms et al.
5,019,080	A	5/1991	Hemer
5,129,388	A	7/1992	Vignaud et al.
5,207,678	A	5/1993	Harms et al.
5,261,912	A	11/1993	Frigg
5,312,404	A	5/1994	Asher et al.
5,360,431	A	11/1994	Puno et al.
5,395,371	A	3/1995	Miller et al.
5,429,639	A	7/1995	Judet

(Continued)

FOREIGN PATENT DOCUMENTS

DE	19507141	9/1996
DE	29903342	6/1999

(Continued)

OTHER PUBLICATIONS

EBI Omega 21 Brochure, EBI Spine Systems, pub. 1999.

(Continued)

Primary Examiner — Pedro Philogene
Assistant Examiner — David Comstock
(74) *Attorney, Agent, or Firm* — John C. McMahon

(57) **ABSTRACT**

An open implant closure structure includes a helically wound guide and advancement structure having at least two helically wound forms thereon providing a multi-start closing mechanism for use between spaced arms of a cooperating open medical implant having mating helically wound structure thereon. Illustrated structures include interlocking flange forms, v-threads, square threads, reverse angle threads and buttress threads and receivers with break-off extensions and cooperating tooling.

22 Claims, 7 Drawing Sheets

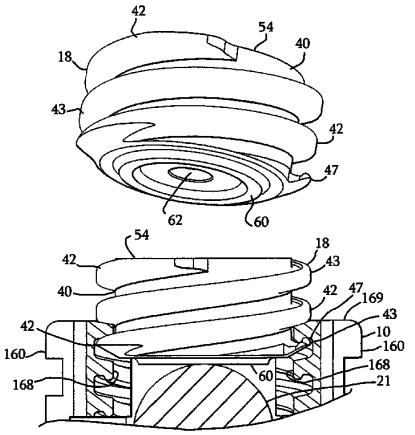

(56) **References Cited**

U.S. PATENT DOCUMENTS

5,443,467	A	8/1995	Biedermann et al.
5,466,237	A	11/1995	Byrd, III et al.
5,474,555	A	12/1995	Puno et al.
5,476,462	A	12/1995	Allard et al.
5,476,464	A	12/1995	Metz-Stavenhagen et al.
5,496,321	A	3/1996	Puno et al.
5,554,157	A	9/1996	Errico et al.
5,569,247	A	10/1996	Morrison
5,584,834	A	12/1996	Errico et al.
5,586,984	A	12/1996	Errico et al.
5,591,166	A	1/1997	Bernhardt et al.
5,601,553	A	2/1997	Trebing et al.
5,607,426	A	3/1997	Ralph et al.
5,647,873	A	7/1997	Errico et al.
5,669,911	A	9/1997	Errico et al.
5,672,176	A	9/1997	Biedermann et al.
5,681,319	A	10/1997	Biedermann et al.
5,683,392	A	11/1997	Richelsoph
5,690,630	A	11/1997	Errico et al.
5,716,356	A	2/1998	Biedermann et al.
5,725,528	A	3/1998	Errico et al.
5,728,098	A	3/1998	Sherman et al.
5,733,286	A	3/1998	Errico et al.
5,738,685	A	4/1998	Halm et al.
5,782,833	A	7/1998	Haider
5,797,911	A	8/1998	Sherman et al.
5,800,435	A	9/1998	Errico et al.
5,817,094	A	10/1998	Errico et al.
5,863,293	A	1/1999	Richelsoph
5,873,878	A	2/1999	Harms et al.
5,876,402	A	3/1999	Errico et al.
5,879,350	A	3/1999	Sherman et al.
5,879,351	A	3/1999	Viart
5,882,350	A	3/1999	Ralph et al.
5,885,286	A	3/1999	Sherman et al.
5,891,145	A	4/1999	Morrison et al.
5,938,663	A	8/1999	Petreto
5,954,725	A	9/1999	Sherman et al.
5,961,517	A	10/1999	Biedermann et al.
5,964,760	A	10/1999	Richelsoph
6,010,503	A	1/2000	Richelsoph et al.
6,019,759	A	2/2000	Rogozinski
6,022,350	A	2/2000	Ganem
6,053,917	A	4/2000	Sherman et al.
6,063,090	A	5/2000	Schlapfer
6,074,391	A	6/2000	Metz-Stavenhagen et al.
6,077,262	A	6/2000	Schlapfer et al.
6,086,588	A	7/2000	Ameil et al.
6,090,110	A	7/2000	Metz-Stavenhagen
6,090,111	A	7/2000	Nichols
6,099,528	A	8/2000	Saurat
6,110,172	A	8/2000	Jackson
6,113,601	A	9/2000	Tatar
6,132,431	A	10/2000	Nilsson et al.
6,132,432	A	10/2000	Richelsoph
6,132,434	A	10/2000	Sherman et al.
6,146,383	A	11/2000	Studer et al.
6,183,472	B1	2/2001	Lutz
6,186,718	B1	2/2001	Fogard
6,187,005	B1	2/2001	Brace et al.
6,214,012	B1	4/2001	Karpman et al.
RE37,161	E	5/2001	Michelson et al.
6,224,596	B1	5/2001	Jackson
6,248,105	B1	6/2001	Schlapfer et al.
6,254,602	B1	7/2001	Justis
6,273,888	B1	8/2001	Justis
6,280,442	B1	8/2001	Barker et al.
6,280,445	B1	8/2001	Morrison et al.
6,287,308	B1	9/2001	Betz et al.
6,287,311	B1	9/2001	Sherman et al.
6,296,642	B1	10/2001	Morrison et al.
6,302,888	B1	10/2001	Mellinger et al.
6,309,391	B1	10/2001	Crandall et al.
6,331,179	B1	12/2001	Freid et al.
6,355,040	B1	3/2002	Richelsoph et al.
RE37,665	E	4/2002	Ralph et al.
6,368,321	B1	4/2002	Jackson
6,371,957	B1	4/2002	Amrein et al.
6,402,752	B2	6/2002	Schaffler-Wachter et al.
6,440,137	B1	8/2002	Horvath et al.
6,451,021	B1	9/2002	Ralph et al.
6,471,703	B1	10/2002	Ashman
6,471,705	B1	10/2002	Biedermann et al.
6,485,494	B1	11/2002	Haider
6,488,681	B2	12/2002	Martin et al.
6,508,818	B2	1/2003	Steiner et al.
6,520,962	B1	2/2003	Taylor et al.
6,527,804	B1	3/2003	Gauchet et al.
6,530,929	B1	3/2003	Justis et al.
6,533,786	B1	3/2003	Needham et al.
6,547,790	B2	4/2003	Harkey, III et al.
6,551,320	B2	4/2003	Lieberman
6,554,832	B2	4/2003	Shluzas
6,554,834	B1	4/2003	Crozet et al.
6,558,387	B2	5/2003	Errico et al.
6,562,040	B1	5/2003	Wagner
6,565,565	B1	5/2003	Yuan et al.
6,565,567	B1	5/2003	Haider
6,582,436	B2	6/2003	Schlapfer et al.
6,582,466	B1	6/2003	Gauchet
6,585,740	B2	7/2003	Schlapfer et al.
6,595,992	B1	7/2003	Wagner et al.
6,595,993	B2	7/2003	Donno et al.
6,610,063	B2	8/2003	Kumar et al.
6,613,050	B1	9/2003	Wagner et al.
6,623,485	B2	9/2003	Doubler et al.
6,626,907	B2	9/2003	Campbell et al.
6,626,908	B2	9/2003	Cooper et al.
6,635,059	B2	10/2003	Randall et al.
6,648,885	B1	11/2003	Friesem
6,648,887	B2	11/2003	Ashman
6,652,526	B1	11/2003	Arafiles
6,656,179	B1	12/2003	Schaefer et al.
6,656,181	B2	12/2003	Dixon et al.
6,660,004	B2	12/2003	Barker et al.
6,663,632	B1	12/2003	Frigg
6,663,635	B2	12/2003	Frigg et al.
6,673,073	B1	1/2004	Schafer
6,676,661	B1	1/2004	Martin Benlloch et al.
6,679,833	B2	1/2004	Smith et al.
6,682,529	B2	1/2004	Stahurski
6,689,133	B2	2/2004	Morrison et al.
6,689,134	B2	2/2004	Ralph et al.
6,695,843	B2	2/2004	Biedermann et al.
6,695,851	B2	2/2004	Zdeblick et al.
6,699,249	B2	3/2004	Schlapfer et al.
6,706,045	B2	3/2004	Lin et al.
6,712,818	B1	3/2004	Michelson
6,716,213	B2	4/2004	Shitoto
6,716,214	B1	4/2004	Jackson
6,716,247	B2	4/2004	Michelson
6,723,100	B2	4/2004	Biedermann et al.
6,726,689	B2	4/2004	Jackson
6,730,093	B2	5/2004	Saint Martin
6,730,127	B2	5/2004	Michelson
6,733,502	B2	5/2004	Altarac et al.
6,736,816	B2	5/2004	Ritland
6,736,820	B2	5/2004	Biedermann et al.
6,740,086	B2	5/2004	Richelsoph
6,746,449	B2	6/2004	Jones et al.
6,755,829	B1	6/2004	Bono et al.
6,755,835	B2	6/2004	Schultheiss et al.
6,755,836	B1	6/2004	Lewis
6,761,723	B2	7/2004	Buttermann et al.
6,767,351	B2	7/2004	Orbay et al.
6,770,075	B2	8/2004	Howland
6,780,186	B2	8/2004	Errico et al.
6,790,209	B2	9/2004	Beale et al.
6,827,719	B2	12/2004	Ralph et al.
6,830,571	B2	12/2004	Lenke et al.
6,835,196	B2	12/2004	Biedermann et al.
6,840,940	B2	1/2005	Ralph et al.
6,843,791	B2	1/2005	Serhan
6,858,031	B2	2/2005	Morrison et al.

(56) **References Cited**

U.S. PATENT DOCUMENTS

6,869,432	B2	3/2005	Schlapfer et al.
6,869,433	B2	3/2005	Glascott
6,872,208	B1	3/2005	McBride et al.
6,896,677	B1	5/2005	Lin
6,932,817	B2	8/2005	Baynham et al.
6,945,972	B2	9/2005	Frigg et al.
6,953,462	B2	10/2005	Lieberman
6,955,677	B2	10/2005	Dahners
6,958,065	B2	10/2005	Ueyama et al.
6,964,664	B2	11/2005	Freid et al.
6,964,665	B2	11/2005	Thomas et al.
6,968,966	B2	11/2005	Gregory
6,974,460	B2	12/2005	Carbone et al.
6,979,334	B2	12/2005	Dalton
6,981,973	B2	1/2006	McKinley
RE39,035	E	3/2006	Finn et al.
7,008,228	B2	3/2006	Bjorn et al.
7,018,378	B2	3/2006	Biedermann et al.
7,018,379	B2	3/2006	Drewry et al.
7,022,122	B2	4/2006	Amrein et al.
RE39,089	E	5/2006	Ralph et al.
7,066,062	B2	6/2006	Flesher
7,066,937	B2	6/2006	Shluzas
7,081,116	B1	7/2006	Carly
7,083,621	B2	8/2006	Shaolian et al.
7,087,057	B2	8/2006	Konieczynski et al.
7,090,674	B2	8/2006	Doubler et al.
7,121,755	B2	10/2006	Schlapfer et al.
7,125,426	B2	10/2006	Moumene et al.
7,128,743	B2	10/2006	Metz-Stavenhagen
7,141,051	B2	11/2006	Janowski et al.
7,144,396	B2	12/2006	Shluzas
7,163,538	B2	1/2007	Altarac et al.
7,163,539	B2	1/2007	Abdelgany et al.
7,166,108	B2	1/2007	Mazda et al.
7,186,255	B2	3/2007	Baynham et al.
7,211,086	B2	5/2007	Biedermann
7,211,087	B2	5/2007	Young
7,214,227	B2	5/2007	Colleran et al.
7,223,268	B2	5/2007	Biedermann
7,264,621	B2	9/2007	Coates et al.
7,270,665	B2	9/2007	Morrison et al.
7,291,151	B2	11/2007	Alvarez
7,291,153	B2	11/2007	Glascott
7,294,127	B2	11/2007	Leung et al.
7,294,128	B2	11/2007	Alleyne et al.
7,294,129	B2	11/2007	Hawkins et al.
7,306,603	B2	12/2007	Boehm, Jr. et al.
7,306,604	B2	12/2007	Carli
7,306,606	B2	12/2007	Sasing
7,314,467	B2	1/2008	Howland
7,316,684	B1	1/2008	Baccelli et al.
7,322,979	B2	1/2008	Crandall et al.
7,335,201	B2	2/2008	Doubler et al.
7,335,202	B2	2/2008	Matthis et al.
7,338,490	B2	3/2008	Ogilvie et al.
7,338,491	B2	3/2008	Baker et al.
7,445,627	B2	11/2008	Hawkes et al.
7,476,228	B2	1/2009	Abdou
7,479,156	B2	1/2009	Lourdel et al.
7,491,218	B2	2/2009	Landry et al.
7,491,221	B2	2/2009	David
7,503,918	B2	3/2009	Baccelli et al.
7,503,924	B2	3/2009	Lee et al.
7,524,323	B2	4/2009	Malandain
7,527,640	B2	5/2009	Ziolo et al.
7,530,992	B2	5/2009	Biedermann et al.
7,559,943	B2	7/2009	Mujwid
7,563,264	B2	7/2009	Landry et al.
7,563,275	B2	7/2009	Falahee et al.
7,569,061	B2	8/2009	Colleran
7,572,279	B2	8/2009	Jackson
7,572,280	B2	8/2009	Dickinson et al.
7,575,587	B2	8/2009	Rezach et al.
7,582,107	B2	9/2009	Trail et al.
7,588,575	B2	9/2009	Colleran et al.
7,588,588	B2	9/2009	Spitler et al.
7,588,593	B2	9/2009	Aferzon
7,591,839	B2	9/2009	Biedermann et al.
7,601,166	B2	10/2009	Biedermann et al.
7,604,655	B2	10/2009	Warnick
7,604,656	B2	10/2009	Shluzas
7,611,518	B2	11/2009	Walder et al.
7,615,068	B2	11/2009	Timm et al.
7,621,941	B2	11/2009	Schlapfer et al.
7,625,394	B2	12/2009	Molz, IV et al.
7,641,674	B2	1/2010	Young
7,645,294	B2	1/2010	Kalfas et al.
7,648,522	B2	1/2010	David
7,674,277	B2	3/2010	Burd et al.
7,678,136	B2	3/2010	Doubler et al.
7,678,139	B2	3/2010	Garamszegi et al.
7,682,377	B2	3/2010	Konieczynski et al.
7,686,833	B1	3/2010	Muhanna et al.
7,686,834	B2	3/2010	Saint Martin
7,686,835	B2	3/2010	Warnick
7,691,129	B2	4/2010	Felix
7,691,131	B2	4/2010	Graf
7,691,132	B2	4/2010	Landry et al.
7,695,497	B2	4/2010	Cordaro et al.
7,695,498	B2	4/2010	Ritland
7,699,872	B2	4/2010	Farris et al.
7,699,875	B2	4/2010	Timm
7,699,876	B2	4/2010	Barry et al.
7,704,271	B2	4/2010	Abdou
7,713,288	B2	5/2010	Timm et al.
7,717,941	B2	5/2010	Petit
7,717,942	B2	5/2010	Schumacher
7,717,943	B2	5/2010	Kirschman
7,722,646	B2	5/2010	Ralph et al.
7,722,649	B2	5/2010	Biedermann et al.
7,722,651	B2	5/2010	Kwak et al.
7,722,652	B2	5/2010	Justis et al.
7,722,654	B2	5/2010	Taylor et al.
7,727,261	B2	6/2010	Barker et al.
7,731,736	B2	6/2010	Guenther et al.
7,731,749	B2	6/2010	Biedermann et al.
7,749,258	B2	7/2010	Biedermann et al.
7,758,618	B2	7/2010	Walder et al.
7,763,057	B2	7/2010	Abdelgany et al.
7,766,943	B1	8/2010	Fallin et al.
7,766,944	B2	8/2010	Metz-Stavenhagen
7,766,945	B2	8/2010	Nilsson et al.
7,766,946	B2	8/2010	Bailly
7,780,706	B2	8/2010	Marino et al.
7,785,351	B2	8/2010	Gordon et al.
7,785,354	B2	8/2010	Biedermann et al.
7,789,900	B2	9/2010	Levy et al.
7,794,477	B2	9/2010	Melkent et al.
7,794,480	B2	9/2010	Gordon et al.
7,806,913	B2	10/2010	Fanger et al.
7,811,288	B2	10/2010	Jones et al.
7,811,310	B2	10/2010	Baker et al.
7,819,902	B2	10/2010	Abdelgany et al.
7,878,351	B2	2/2011	Falzoni et al.
RE42,545	E	7/2011	Ralph et al.
7,972,364	B2	7/2011	Biedermann et al.
7,985,242	B2	7/2011	Forton et al.
7,985,248	B2	7/2011	Walder et al.
RE42,626	E	8/2011	Taylor et al.
7,988,694	B2	8/2011	Barrus et al.
7,988,711	B2	8/2011	Erickson et al.
8,002,806	B2	8/2011	Justis
8,012,183	B2	9/2011	Alain
8,012,186	B2	9/2011	Pham et al.
8,012,188	B2	9/2011	Meltent et al.
8,016,862	B2	9/2011	Felix et al.
8,016,866	B2	9/2011	Warnick
8,021,397	B2	9/2011	Farris et al.
8,025,681	B2	9/2011	Colleran et al.
8,029,539	B2	10/2011	Kirschman
8,034,084	B2	10/2011	Landry et al.
8,043,340	B1	10/2011	Law
8,048,124	B2	11/2011	Chin et al.

(56) **References Cited**

U.S. PATENT DOCUMENTS

8,048,126	B2	11/2011	Altarac et al.
8,052,720	B2	11/2011	Kuester et al.
8,057,519	B2	11/2011	Justis et al.
8,062,339	B2	11/2011	Hammer et al.
8,066,744	B2	11/2011	Justis et al.
8,075,599	B2	12/2011	Johnson et al.
8,075,603	B2	12/2011	Hammill, Sr. et al.
8,083,776	B2	12/2011	Alvarez
8,100,946	B2	1/2012	Strausbaugh et al.
8,100,947	B2	1/2012	Ensign et al.
8,100,948	B2	1/2012	Ensign et al.
8,137,387	B2	3/2012	Garamszegi
8,162,990	B2	4/2012	Potash et al.
8,162,991	B2	4/2012	Strauss et al.
8,167,913	B2	5/2012	Albert et al.
8,167,914	B1	5/2012	Hunt et al.
8,197,517	B1	6/2012	Lab et al.
8,197,518	B2	6/2012	Hammill, Sr. et al.
8,221,471	B2	7/2012	Kovach et al.
8,221,472	B2	7/2012	Peterson et al.
8,236,032	B2	8/2012	Ramsay et al.
8,236,035	B1	8/2012	Bedor
2001/0001119	A1	5/2001	Lombardo
2002/0035366	A1	3/2002	Walder et al.
2002/0045898	A1	4/2002	Freid et al.
2002/0072751	A1	6/2002	Jackson
2002/0082602	A1	6/2002	Biedermann et al.
2002/0111626	A1	8/2002	Ralph et al.
2002/0133159	A1	9/2002	Jackson
2002/0143341	A1	10/2002	Biedermann et al.
2002/0173789	A1	11/2002	Howland
2002/0193795	A1	12/2002	Gertzbein et al.
2003/0023240	A1	1/2003	Amrein et al.
2003/0023243	A1	1/2003	Biedermann et al.
2003/0073996	A1	4/2003	Doubler et al.
2003/0093078	A1	5/2003	Ritland
2003/0100896	A1	5/2003	Biedermann et al.
2003/0105460	A1	6/2003	Crandall et al.
2003/0125741	A1	7/2003	Biedermann et al.
2003/0149432	A1	8/2003	Frigg et al.
2003/0153911	A1	8/2003	Shluzas
2003/0163133	A1	8/2003	Altarac et al.
2003/0176862	A1	9/2003	Taylor et al.
2003/0199873	A1	10/2003	Richelsoph
2003/0208204	A1	11/2003	Bailey et al.
2003/0216735	A1	11/2003	Altarac et al.
2004/0006342	A1	1/2004	Altarac et al.
2004/0092934	A1	5/2004	Howland
2004/0097933	A1	5/2004	Lourdel et al.
2004/0116929	A1	6/2004	Barker et al.
2004/0138662	A1	7/2004	Landry et al.
2004/0143265	A1	7/2004	Landry et al.
2004/0147929	A1	7/2004	Biedermann et al.
2004/0158247	A1	8/2004	Sitiso et al.
2004/0172022	A1	9/2004	Landry et al.
2004/0176766	A1	9/2004	Shluzas
2004/0186473	A1	9/2004	Cournoyer et al.
2004/0210216	A1	10/2004	Farris et al.
2004/0225289	A1	11/2004	Biedermann et al.
2004/0236330	A1	11/2004	Purcell et al.
2004/0249380	A1	12/2004	Glascott
2004/0267264	A1	12/2004	Konieczynski et al.
2005/0027296	A1	2/2005	Thramann et al.
2005/0055026	A1	3/2005	Biedermann et al.
2005/0070899	A1	3/2005	Doubler et al.
2005/0080415	A1	4/2005	Keyer et al.
2005/0096654	A1	5/2005	Lin
2005/0107788	A1	5/2005	Beaurain et al.
2005/0113927	A1	5/2005	Malek
2005/0131404	A1	6/2005	Mazda et al.
2005/0131413	A1	6/2005	O'Driscoll et al.
2005/0149023	A1	7/2005	Ritland
2005/0154389	A1	7/2005	Selover et al.
2005/0154391	A1	7/2005	Doherty et al.
2005/0159750	A1	7/2005	Doherty
2005/0165400	A1	7/2005	Fernandez
2005/0171540	A1	8/2005	Lim et al.
2005/0187548	A1	8/2005	Butler et al.
2005/0187555	A1	8/2005	Biedermann et al.
2005/0192580	A1	9/2005	Dalton
2005/0203511	A1	9/2005	Wilson-MacDonald et al.
2005/0203516	A1	9/2005	Biedermann et al.
2005/0216003	A1	9/2005	Biedermann et al.
2005/0228501	A1	10/2005	Miller et al.
2005/0234450	A1	10/2005	Barker
2005/0234451	A1	10/2005	Markworth
2005/0234452	A1	10/2005	Malandain
2005/0240181	A1	10/2005	Boomer et al.
2005/0240183	A1	10/2005	Vaughan
2005/0251137	A1	11/2005	Ball
2005/0251141	A1	11/2005	Frigg et al.
2005/0260058	A1	11/2005	Casagne, III
2005/0261687	A1	11/2005	Garamszegi et al.
2005/0267474	A1	12/2005	Dalton
2005/0273099	A1	12/2005	Baccelli et al.
2005/0273101	A1	12/2005	Schumacher
2005/0277919	A1	12/2005	Slivka et al.
2005/0277925	A1	12/2005	Mujwid
2005/0277928	A1	12/2005	Boschert
2005/0283152	A1	12/2005	Lindemann et al.
2005/0283157	A1	12/2005	Coates et al.
2005/0283238	A1	12/2005	Reiley
2005/0288669	A1	12/2005	Abdou
2005/0288671	A1	12/2005	Yuan et al.
2005/0288673	A1	12/2005	Catbagan et al.
2006/0004357	A1	1/2006	Lee et al.
2006/0004359	A1	1/2006	Kramer et al.
2006/0004360	A1	1/2006	Kramer et al.
2006/0004363	A1	1/2006	Brockmeyer et al.
2006/0009769	A1	1/2006	Lieberman
2006/0009770	A1	1/2006	Speirs et al.
2006/0015104	A1	1/2006	Dalton
2006/0025767	A1	2/2006	Khalili
2006/0025768	A1	2/2006	Iott et al.
2006/0025770	A1	2/2006	Schlapfer et al.
2006/0036242	A1	2/2006	Nilsson et al.
2006/0036252	A1	2/2006	Baynham et al.
2006/0052783	A1	3/2006	Dant et al.
2006/0052784	A1	3/2006	Dant et al.
2006/0052786	A1	3/2006	Dant et al.
2006/0058788	A1	3/2006	Hammer et al.
2006/0074419	A1	4/2006	Taylor et al.
2006/0079894	A1	4/2006	Colleran et al.
2006/0079895	A1	4/2006	McLeer
2006/0079899	A1	4/2006	Ritland
2006/0084981	A1	4/2006	Shluzas
2006/0084989	A1	4/2006	Dickinson et al.
2006/0084993	A1	4/2006	Landry et al.
2006/0084995	A1	4/2006	Biedermann et al.
2006/0089643	A1	4/2006	Mujwid
2006/0089644	A1	4/2006	Felix
2006/0095037	A1	5/2006	Jones et al.
2006/0106380	A1	5/2006	Colleran et al.
2006/0106383	A1	5/2006	Biedermann et al.
2006/0116677	A1	6/2006	Burd et al.
2006/0129147	A1	6/2006	Biedermann et al.
2006/0129149	A1	6/2006	Iott et al.
2006/0142761	A1	6/2006	Landry et al.
2006/0149232	A1	7/2006	Sasing
2006/0149241	A1	7/2006	Richelsoph et al.
2006/0149244	A1	7/2006	Amrein et al.
2006/0155277	A1	7/2006	Metz-Stavenhagen
2006/0155278	A1	7/2006	Warnick
2006/0161152	A1	7/2006	Ensign et al.
2006/0166535	A1	7/2006	Brumfiled et al.
2006/0167455	A1	7/2006	Clement et al.
2006/0173454	A1	8/2006	Spitler et al.
2006/0173456	A1	8/2006	Hawkes et al.
2006/0195098	A1	8/2006	Schumacher
2006/0200128	A1	9/2006	Mueller
2006/0200131	A1	9/2006	Chao et al.
2006/0200149	A1	9/2006	Hoy et al.
2006/0212034	A1	9/2006	Triplett et al.
2006/0217716	A1	9/2006	Baker et al.

(56) **References Cited**

U.S. PATENT DOCUMENTS

2006/0229614	A1	10/2006	Foley et al.
2006/0229615	A1	10/2006	Abdou
2006/0235389	A1	10/2006	Albert et al.
2006/0235392	A1	10/2006	Hammer et al.
2006/0235393	A1	10/2006	Bono et al.
2006/0241593	A1	10/2006	Sherman et al.
2006/0241595	A1	10/2006	Molz, IV et al.
2006/0241599	A1	10/2006	Konieczynski et al.
2006/0241600	A1	10/2006	Ensign et al.
2006/0247624	A1	11/2006	Banouskou et al.
2006/0247631	A1	11/2006	Ahn et al.
2006/0247636	A1	11/2006	Yuan et al.
2006/0247779	A1	11/2006	Gordon et al.
2006/0264933	A1	11/2006	Baker et al.
2006/0264936	A1	11/2006	Partin et al.
2006/0276787	A1	12/2006	Zubok et al.
2006/0276789	A1	12/2006	Jackson
2006/0276791	A1	12/2006	Shluzas
2006/0276792	A1	12/2006	Ensign et al.
2006/0282074	A1	12/2006	Renaud et al.
2006/0293659	A1	12/2006	Alvarez
2006/0293665	A1	12/2006	Shluzas
2006/0293666	A1	12/2006	Matthis et al.
2007/0016188	A1	1/2007	Boehm, Jr. et al.
2007/0016198	A1	1/2007	Boehm, Jr. et al.
2007/0021750	A1	1/2007	Shluzas et al.
2007/0043355	A1	2/2007	Bette et al.
2007/0043357	A1	2/2007	Kirschman
2007/0043358	A1	2/2007	Molz, IV et al.
2007/0043359	A1	2/2007	Altarac et al.
2007/0043364	A1	2/2007	Cawley et al.
2007/0049933	A1	3/2007	Ahn et al.
2007/0055235	A1	3/2007	Janowski et al.
2007/0055238	A1	3/2007	Biedermann et al.
2007/0055239	A1	3/2007	Sweeney et al.
2007/0055240	A1	3/2007	Matthis et al.
2007/0055241	A1	3/2007	Matthis et al.
2007/0055242	A1	3/2007	Bailly
2007/0055244	A1	3/2007	Jackson
2007/0073291	A1	3/2007	Cordaro et al.
2007/0078460	A1	4/2007	Frigg et al.
2007/0083199	A1	4/2007	Baccelli
2007/0088357	A1	4/2007	Johnson et al.
2007/0093817	A1	4/2007	Barrus et al.
2007/0093818	A1	4/2007	Biedermann et al.
2007/0093819	A1	4/2007	Albert
2007/0093826	A1	4/2007	Hawkes et al.
2007/0093827	A1	4/2007	Warnick
2007/0093831	A1	4/2007	Abdelgany et al.
2007/0100341	A1	5/2007	Reglos et al.
2007/0118117	A1	5/2007	Altarac et al.
2007/0118118	A1	5/2007	Kwak et al.
2007/0118123	A1	5/2007	Strausbaugh et al.
2007/0118124	A1	5/2007	Biedermann et al.
2007/0123862	A1	5/2007	Warnick
2007/0123864	A1	5/2007	Walder et al.
2007/0123867	A1	5/2007	Kirschman
2007/0123870	A1	5/2007	Jeon et al.
2007/0161986	A1	7/2007	Levy
2007/0161994	A1	7/2007	Lowery et al.
2007/0161995	A1	7/2007	Trautwein et al.
2007/0161996	A1	7/2007	Biedermann et al.
2007/0161999	A1	7/2007	Biedermann et al.
2007/0167948	A1	7/2007	Abdou
2007/0167949	A1	7/2007	Altarac et al.
2007/0173819	A1	7/2007	Sandlin
2007/0173820	A1	7/2007	Trieu
2007/0173828	A1	7/2007	Firkins et al.
2007/0191839	A1	8/2007	Justis et al.
2007/0198014	A1	8/2007	Graf et al.
2007/0208344	A1	9/2007	Young
2007/0225707	A1	9/2007	Wisnewski et al.
2007/0225711	A1	9/2007	Ensign
2007/0233078	A1	10/2007	Justis et al.
2007/0233080	A1	10/2007	Na et al.
2007/0233086	A1	10/2007	Harms et al.
2007/0233087	A1	10/2007	Schlapfer
2007/0250061	A1	10/2007	Chin et al.
2007/0260246	A1	11/2007	Biedermann
2007/0270806	A1	11/2007	Foley et al.
2007/0270807	A1	11/2007	Armstrong et al.
2007/0270810	A1	11/2007	Sanders
2007/0270813	A1	11/2007	Garamszegi
2007/0270815	A1	11/2007	Johnson et al.
2007/0270830	A1	11/2007	Morrison
2007/0270831	A1	11/2007	Dewey et al.
2007/0270832	A1	11/2007	Moore
2007/0270835	A1	11/2007	Wisnewski
2007/0270839	A1	11/2007	Jeon et al.
2007/0288004	A1	12/2007	Alvarez
2008/0009862	A1	1/2008	Hoffman
2008/0009864	A1	1/2008	Forton et al.
2008/0015578	A1	1/2008	Erickson et al.
2008/0015579	A1	1/2008	Whipple
2008/0015580	A1	1/2008	Chao
2008/0015584	A1	1/2008	Richelsoph
2008/0015586	A1	1/2008	Krishna et al.
2008/0021454	A1	1/2008	Chao et al.
2008/0021455	A1	1/2008	Chao et al.
2008/0021462	A1	1/2008	Trieu
2008/0021464	A1	1/2008	Morin et al.
2008/0021473	A1	1/2008	Butler et al.
2008/0027432	A1	1/2008	Strauss et al.
2008/0039838	A1	2/2008	Landry et al.
2008/0039843	A1	2/2008	Abdou
2008/0045951	A1	2/2008	Fanger et al.
2008/0045955	A1	2/2008	Berrevoets et al.
2008/0045957	A1	2/2008	Landry et al.
2008/0051780	A1	2/2008	Vaidya et al.
2008/0058811	A1	3/2008	Alleyne et al.
2008/0058812	A1	3/2008	Zehnder
2008/0065073	A1	3/2008	Perriello et al.
2008/0065075	A1	3/2008	Dant
2008/0065077	A1	3/2008	Ferree
2008/0071273	A1	3/2008	Hawkes et al.
2008/0071274	A1	3/2008	Ensign
2008/0071277	A1	3/2008	Warnick
2008/0077139	A1	3/2008	Landry et al.
2008/0086131	A1	4/2008	Daly et al.
2008/0086132	A1	4/2008	Biedermann et al.
2008/0097441	A1	4/2008	Hayes et al.
2008/0097457	A1	4/2008	Warnick
2008/0108992	A1	5/2008	Barry et al.
2008/0119858	A1	5/2008	Potash
2008/0140075	A1	6/2008	Ensign et al.
2008/0154315	A1	6/2008	Jackson
2008/0161859	A1	7/2008	Nilsson
2008/0161863	A1	7/2008	Arnold et al.
2008/0177321	A1	7/2008	Drewry et al.
2008/0177322	A1	7/2008	Davis et al.
2008/0177332	A1	7/2008	Reiley et al.
2008/0183215	A1	7/2008	Altarac et al.
2008/0183223	A1	7/2008	Jeon et al.
2008/0195159	A1	8/2008	Kloss et al.
2008/0200956	A1	8/2008	Beckwith et al.
2008/0215095	A1	9/2008	Biedermann et al.
2008/0228229	A1	9/2008	Walder et al.
2008/0234734	A1	9/2008	Walder et al.
2008/0234756	A1	9/2008	Sutcliffe et al.
2008/0234759	A1	9/2008	Marino
2008/0249570	A1	10/2008	Carson et al.
2008/0249576	A1	10/2008	Wawkes et al.
2008/0262548	A1	10/2008	Lange et al.
2008/0262556	A1	10/2008	Jacofsky et al.
2008/0269742	A1	10/2008	Levy et al.
2008/0269809	A1	10/2008	Garamszegi
2008/0287994	A1	11/2008	Perez-Cruet et al.
2008/0288002	A1	11/2008	Crall et al.
2008/0306528	A1	12/2008	Winslow et al.
2008/0306533	A1	12/2008	Winslow et al.
2008/0306539	A1	12/2008	Cain et al.
2008/0312655	A1	12/2008	Kirschman et al.
2008/0312692	A1	12/2008	Brennan et al.
2008/0312696	A1	12/2008	Batters et al.

(56) **References Cited**

U.S. PATENT DOCUMENTS

2008/0312701	A1	12/2008	Batters et al.
2009/0005787	A1	1/2009	Crall et al.
2009/0005813	A1	1/2009	Crall et al.
2009/0005814	A1	1/2009	Miller et al.
2009/0012567	A1	1/2009	Biedermann et al.
2009/0018591	A1	1/2009	Hawkes et al.
2009/0024169	A1	1/2009	Triplett et al.
2009/0030457	A1	1/2009	Janowski et al.
2009/0036929	A1	2/2009	Reglos et al.
2009/0036932	A1	2/2009	Rouyer et al.
2009/0036934	A1	2/2009	Biedermann et al.
2009/0062860	A1	3/2009	Frasier et al.
2009/0062865	A1	3/2009	Schumacher
2009/0062867	A1	3/2009	Schumacher
2009/0062914	A1	3/2009	Marino
2009/0069849	A1	3/2009	Oh et al.
2009/0069852	A1	3/2009	Farris et al.
2009/0069853	A1	3/2009	Schumacher
2009/0076550	A1	3/2009	Bernhardt, Jr. et al.
2009/0076552	A1	3/2009	Tornier
2009/0082809	A1	3/2009	Nguyen et al.
2009/0082812	A1	3/2009	Lewis
2009/0082815	A1	3/2009	Zylber et al.
2009/0082819	A1	3/2009	Blain et al.
2009/0088799	A1	4/2009	Yeh
2009/0088807	A1	4/2009	Castaneda et al.
2009/0093843	A1	4/2009	Lemoine et al.
2009/0105769	A1	4/2009	Rock et al.
2009/0105770	A1	4/2009	Berrevoets et al.
2009/0105771	A1	4/2009	Lei et al.
2009/0118772	A1	5/2009	Diederich et al.
2009/0131983	A1	5/2009	Biedermann
2009/0138044	A1	5/2009	Bergeron et al.
2009/0138052	A1	5/2009	Biedermann et al.
2009/0143827	A1	6/2009	Levy et al.
2009/0143829	A1	6/2009	Shluzas
2009/0149887	A1	6/2009	Schlaepfer et al.
2009/0163955	A1	6/2009	Moumene et al.
2009/0163956	A1	6/2009	Biedermann et al.
2009/0163961	A1	6/2009	Kirschman
2009/0163963	A1	6/2009	Berrevoets
2009/0182380	A1	7/2009	Abdelgany
2009/0192548	A1	7/2009	Jeon et al.
2009/0192551	A1	7/2009	Cianfrani et al.
2009/0198280	A1	8/2009	Spratt et al.
2009/0198289	A1	8/2009	Manderson
2009/0198291	A1	8/2009	Kevin et al.
2009/0204155	A1	8/2009	Aschmann
2009/0216280	A1	8/2009	Hutchinson
2009/0248030	A1	10/2009	Butler et al.
2009/0248075	A1	10/2009	Ogilvie et al.
2009/0248088	A1	10/2009	Biedermann
2009/0254125	A1	10/2009	Predick
2009/0259254	A1	10/2009	Pisharodi
2009/0264896	A1	10/2009	Biedermann et al.
2009/0264933	A1	10/2009	Carls et al.
2009/0270916	A1	10/2009	Ramsay et al.
2009/0270917	A1	10/2009	Boehm
2009/0281571	A1	11/2009	Weaver et al.
2009/0281572	A1	11/2009	White
2009/0281573	A1	11/2009	Biedermann et al.
2009/0287253	A1	11/2009	Felix et al.
2009/0299415	A1	12/2009	Pimenta
2009/0306719	A1	12/2009	Meyer, III et al.
2009/0306720	A1	12/2009	Doubler et al.
2009/0312804	A1	12/2009	Gamache et al.
2009/0326582	A1	12/2009	Songer et al.
2009/0326587	A1	12/2009	Matthis et al.
2010/0004692	A1	1/2010	Biedermann et al.
2010/0010540	A1	1/2010	Park
2010/0016898	A1	1/2010	Shluzas
2010/0057125	A1	3/2010	Viker
2010/0057126	A1	3/2010	Hestad
2010/0063545	A1	3/2010	Richelsoph
2010/0063546	A1	3/2010	Miller et al.
2010/0063550	A1	3/2010	Felix et al.
2010/0063551	A1	3/2010	Richelsoph
2010/0063553	A1	3/2010	Warnick
2010/0069963	A1	3/2010	Eckman
2010/0069969	A1	3/2010	Ampuero et al.
2010/0087861	A1	4/2010	Lechmann et al.
2010/0087865	A1	4/2010	Biedermann et al.
2010/0094343	A1	4/2010	Pham et al.
2010/0094345	A1	4/2010	Saidha et al.
2010/0094348	A1	4/2010	Biedermann et al.
2010/0094349	A1	4/2010	Hammer et al.
2010/0094352	A1	4/2010	Iott et al.
2010/0094353	A1	4/2010	Shim et al.
2010/0100136	A1	4/2010	Won et al.
2010/0100137	A1	4/2010	Justis et al.
2010/0106189	A1	4/2010	Miller
2010/0114170	A1	5/2010	Barrus et al.
2010/0114171	A1	5/2010	Boachie-Adjei et al.
2010/0114180	A1	5/2010	Rock et al.
2010/0125302	A1	5/2010	Hammill, Sr. et al.
2010/0131017	A1	5/2010	Farris et al.
2010/0131018	A1	5/2010	Konieczynski et al.
2010/0137918	A1	6/2010	Wilcox et al.
2010/0137920	A1	6/2010	Hammill, Sr. et al.
2010/0145390	A1	6/2010	McCarthy et al.
2010/0152776	A1	6/2010	Keyer et al.
2010/0152785	A1	6/2010	Forton et al.
2010/0152787	A1	6/2010	Walsh et al.
2010/0152788	A1	6/2010	Warnick
2010/0160965	A1	6/2010	Viker
2010/0160974	A1	6/2010	Viker
2010/0160980	A1	6/2010	Walsh et al.
2010/0168796	A1	7/2010	Eliasen et al.
2010/0168800	A1	7/2010	Biedermann et al.
2010/0168801	A1	7/2010	Biedermann et al.
2010/0174322	A1	7/2010	Abdelgany et al.
2010/0179603	A1	7/2010	Warnick
2010/0185247	A1	7/2010	Richelsoph
2010/0191290	A1	7/2010	Felix
2010/0198269	A1	8/2010	Taylor et al.
2010/0198270	A1	8/2010	Barker et al.
2010/0198272	A1	8/2010	Keyer et al.
2010/0204735	A1	8/2010	Gephart et al.
2010/0222822	A1	9/2010	Farris et al.
2010/0228293	A1	9/2010	Courtney et al.
2010/0234891	A1	9/2010	Freeman et al.
2010/0241170	A1	9/2010	Cammisa et al.
2010/0249846	A1	9/2010	Simonson
2010/0249856	A1	9/2010	Iott et al.
2010/0256681	A1	10/2010	Hammer et al.
2010/0256682	A1	10/2010	Fallin et al.
2010/0262196	A1	10/2010	Barrus et al.
2011/0166606	A1	7/2011	Stihl et al.
2011/0172715	A1	7/2011	Pond, Jr. et al.
2011/0178558	A1	7/2011	Barry
2011/0184471	A1	7/2011	Foley et al.
2011/0190822	A1	8/2011	Spitler et al.
2011/0190823	A1	8/2011	Bergeron et al.
2011/0190826	A1	8/2011	Ogilvie et al.
2011/0196427	A1	8/2011	Trautwein et al.
2011/0202095	A1	8/2011	Semler et al.
2011/0208251	A1	8/2011	Hammill, Sr. et al.
2011/0230917	A1	9/2011	Carson et al.
2011/0251644	A1	10/2011	Hestad et al.
2011/0257687	A1	10/2011	Trieu et al.
2011/0257689	A1	10/2011	Fiechter et al.
2011/0257690	A1	10/2011	Rezach

FOREIGN PATENT DOCUMENTS

EP	1121902	8/2001
EP	1190678	3/2002
EP	1210914	6/2002
EP	1570795	9/2005
EP	1579816	9/2005
EP	1634537	3/2006
EP	1925263	5/2008
EP	2380513	10/2011
FR	2729291	7/1996

(56) **References Cited**

FOREIGN PATENT DOCUMENTS

FR	2796545	1/2001
FR	2856578	6/2003
FR	2865373	1/2004
FR	2865375	1/2004
FR	2865377	1/2004
FR	2857850	4/2004
FR	2865378	10/2004
FR	2925288	6/2009
GB	9202745.8	4/1992
GB	2365345	2/2002
WO	WO95/01132	1/1995
WO	WO01/10317	2/2001
WO	WO02/054966	7/2002
WO	WO03/068088	8/2003
WO	WO2004/041100	5/2004
WO	WO2004/089245	10/2004
WO	WO2004/107997	12/2004
WO	WO2005/000136	1/2005
WO	WO2005/000137	1/2005
WO	WO2005/020829	3/2005
WO	WO2005/072632	8/2005
WO	WO2005/082262	9/2005
WO	WO2005/099400	10/2005
WO	WO2006/005198	1/2006
WO	WO2006/012088	2/2006
WO	WO2006/017616	2/2006
WO	WO2006/028537	3/2006
WO	WO2006/119241	11/2006
WO	WO2007/118045	10/2007
WO	WO2007/124222	11/2007
WO	WO2007/130835	11/2007
WO	WO2007/130840	11/2007
WO	WO2007/130941	11/2007
WO	WO2008/088731	7/2008
WO	WO2009/015100	1/2009
WO	WO2012/075827	6/2012
WO	WO2012/088890	7/2012

OTHER PUBLICATIONS

Claris Instrumentation Brochure, G Med, pub. 1997.

VLS System Variable Locking Screw Brochure, Interpore Cross International, 1999.

CD Horizon M8 Multi Axial Screw Spinal System Brochure, Medtronic Sofamor Danek, no publish date.

Contour Spinal System Brochure, Ortho Development, no publish date.

Xia Spinal System Brochure, Stryker Howmedica Osteonics, no publish date.

The Rod Plate System Brochure, Stryker Howmedica Osteonics, pub. Oct. 1999.

Silhouette Spinal Fixation System Brochure, Sulzer Medica Spine-Tech, no publish date.

SDRS Surgical Dynamics Rod System Brochure, Surgical Dynamics, pub. 1998-1999.

Versalok Low Back Fixation System Brochure, Wright Medical Technology, Inc., pub. 1997.

The Strength of Innovation Advertisement, Blackstone Medical Inc., no publish date.

The Moss Miami 6.0mm System Advertisement, author unknown, no publish date.

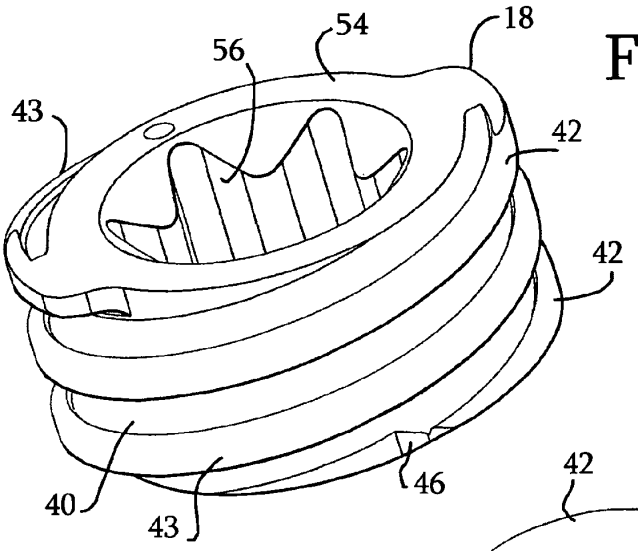

Fig. 1.

Fig. 2.

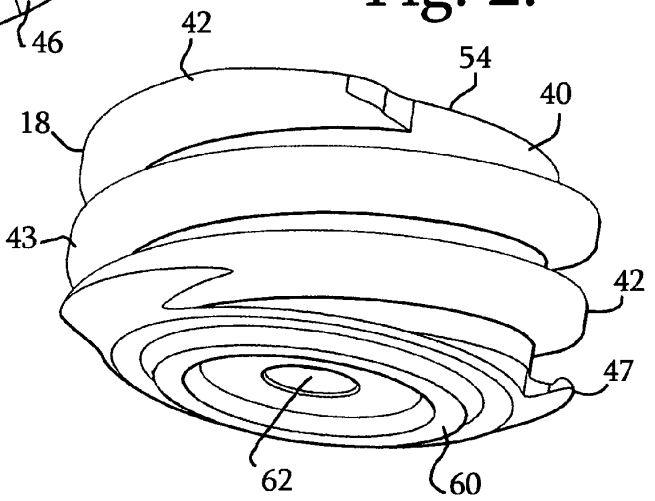

Fig. 3.

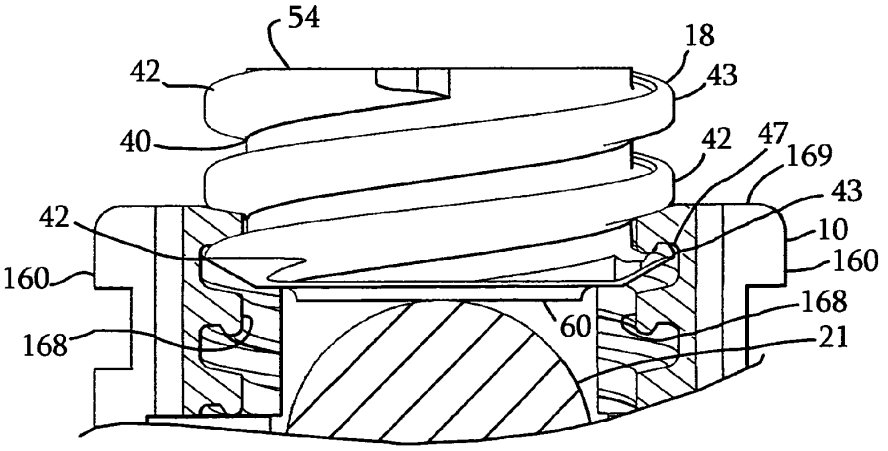

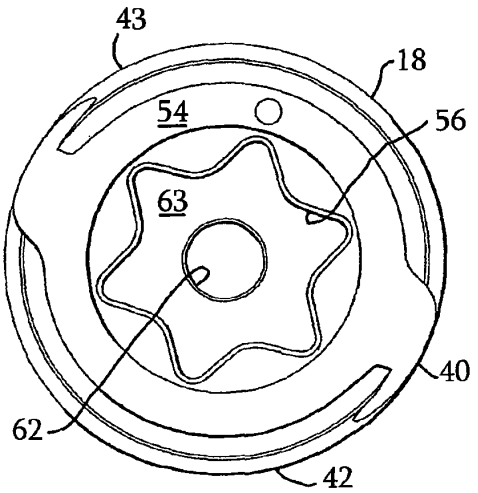

Fig. 4.

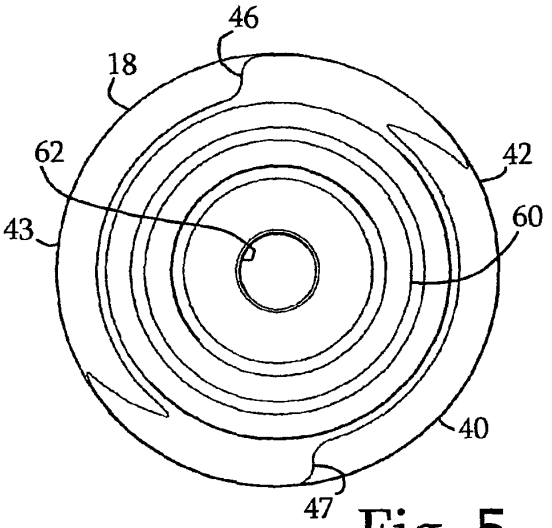

Fig. 5.

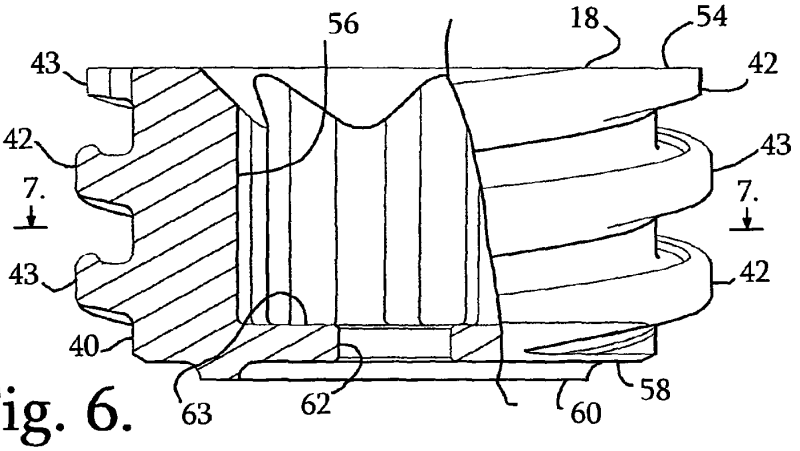

Fig. 6.

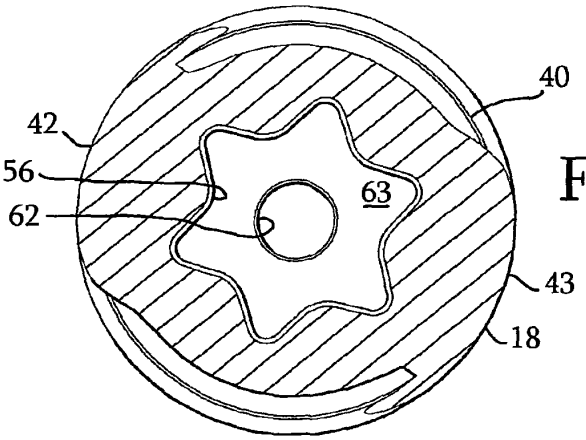

Fig. 7.

Fig. 8.

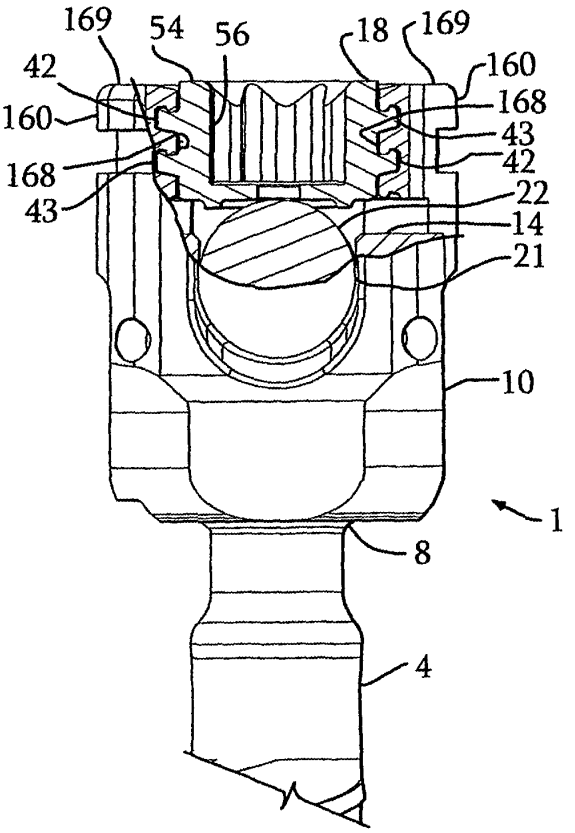

Fig. 9.

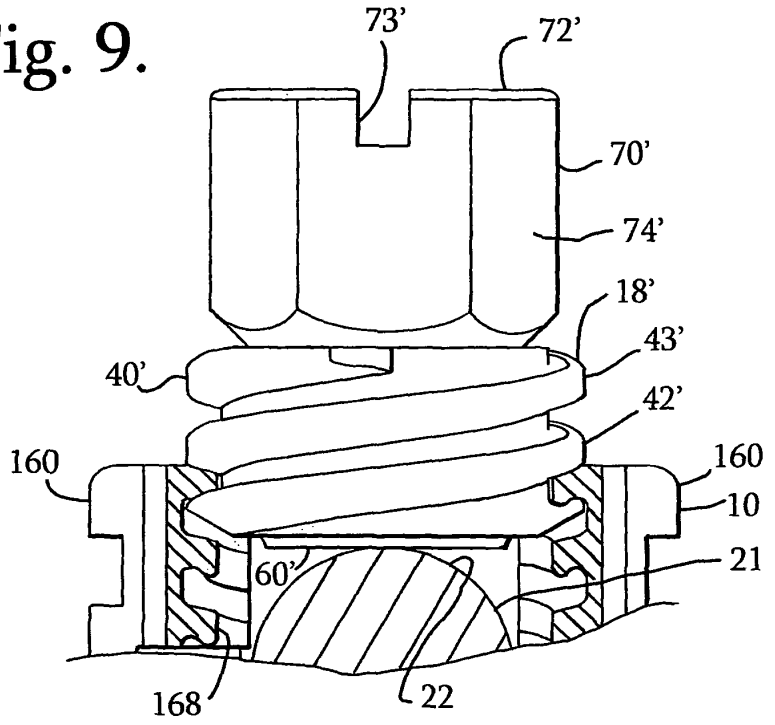
73'
72'
70'
74'
18'
43'
40'
42'
160
160
10
21
60'
168
22

Fig. 10.

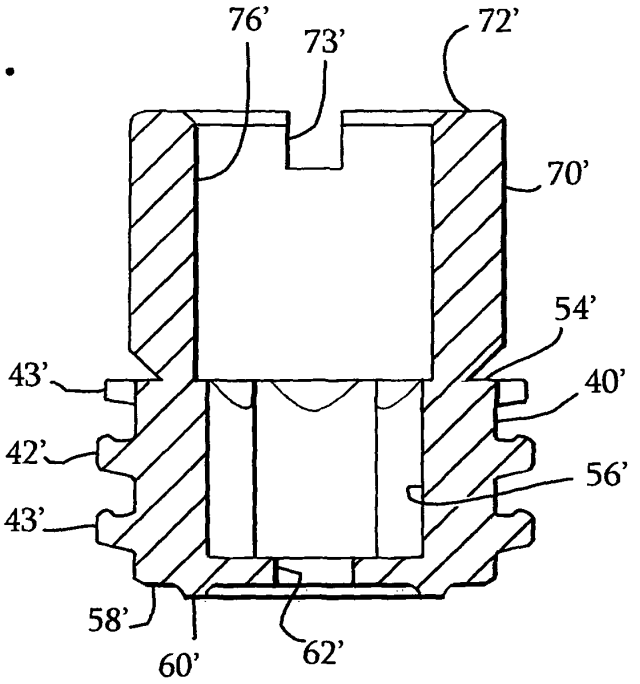
76'
73'
72'
70'
54'
43'
40'
42'
56'
43'
58'
60'
62'

Fig. 11.

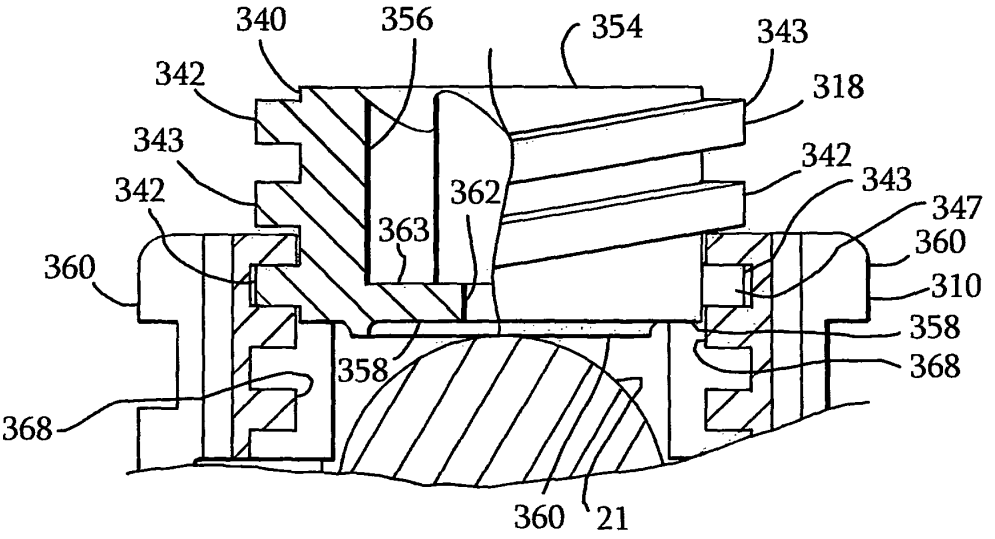
340
356
354
343
342
318
343
342
342
343
362
347
363
360
360
310
358
358
368
368
360
21

Fig. 12.

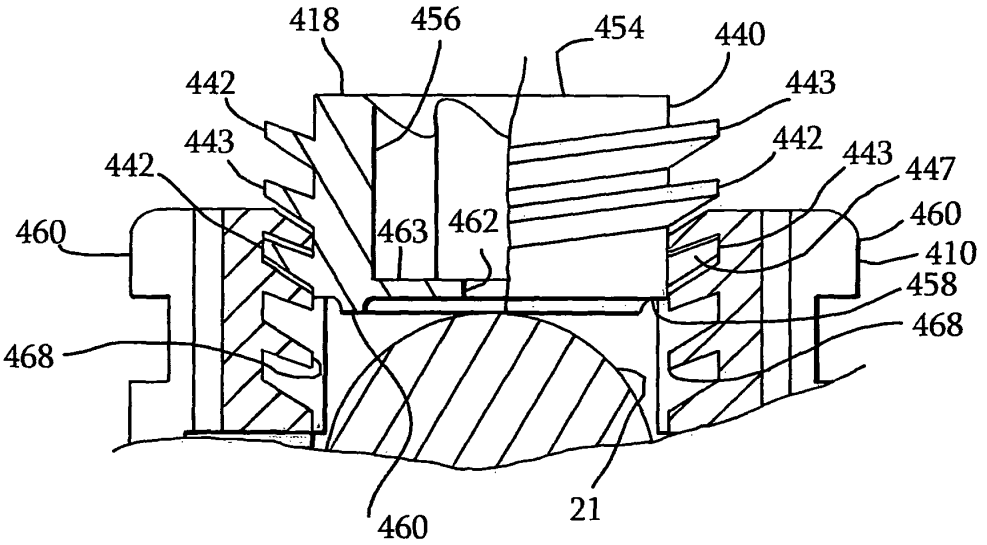
418
456
454
440
442
443
443
442
442
443
447
460
463
462
460
410
458
468
468
460
21

Fig. 13.

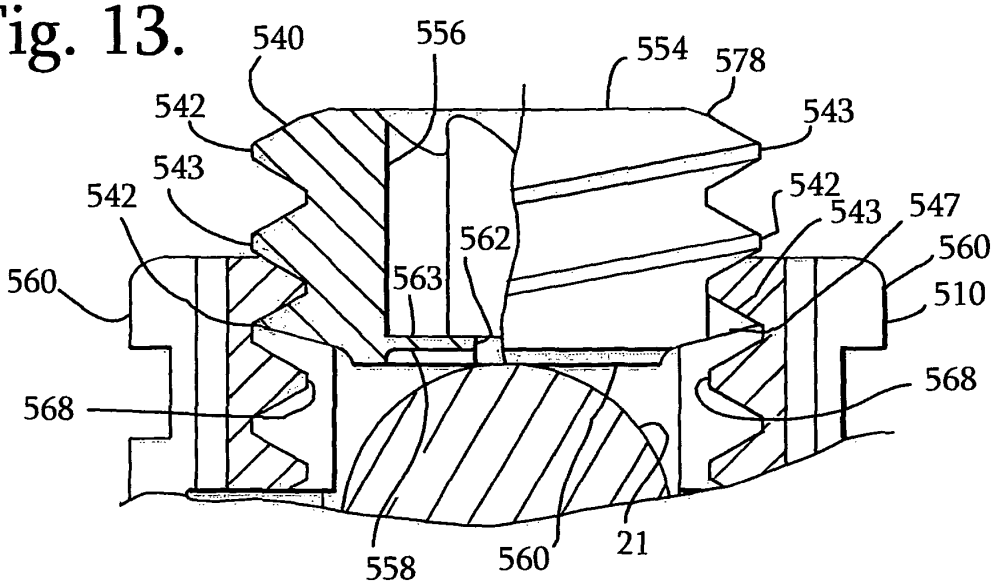
540
556
554
578
542
543
543
542
542
543
547
562
560
560
563
510
568
568
558
560
21

Fig. 14.

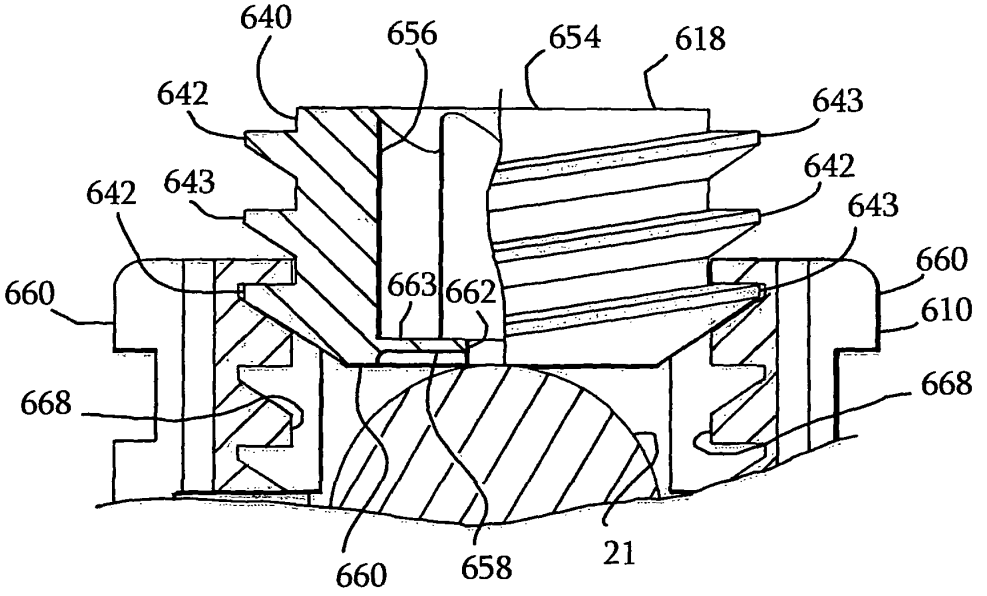
640
656
654
618
642
643
642
643
642
643
660
660
663
662
610
668
668
660
658
21

Fig. 15.

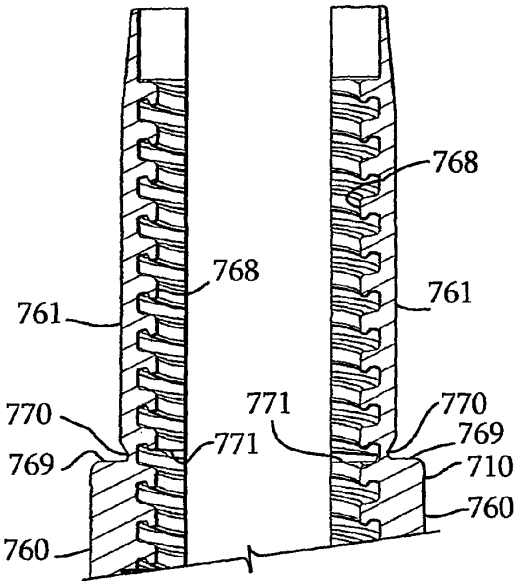

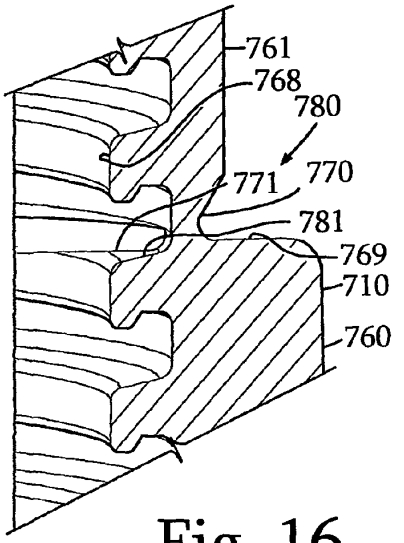

Fig. 16.

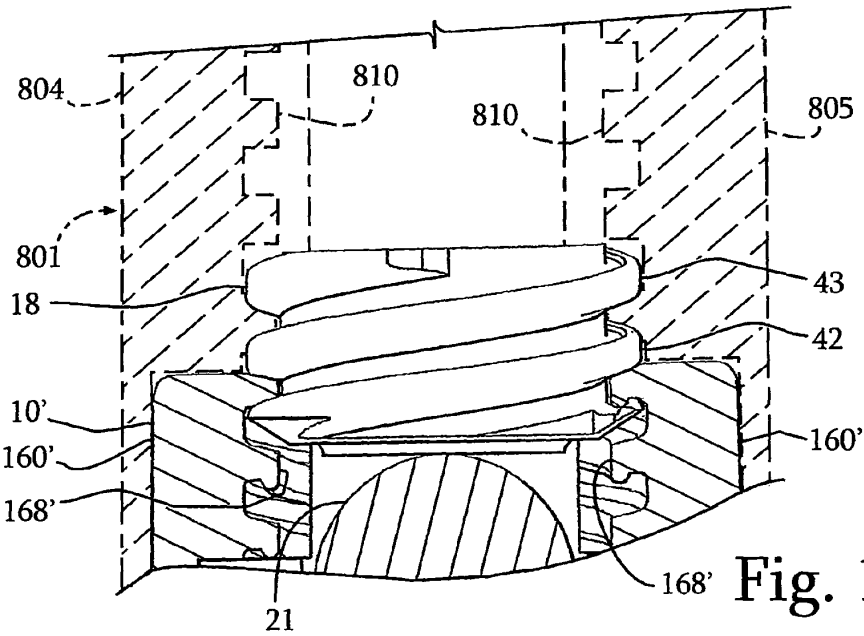

Fig. 17.

MULTI-START CLOSURES FOR OPEN IMPLANTS

CROSS-REFERENCE TO RELATED APPLICATIONS

This application claims the benefit of U.S. Provisional Patent Application Ser. No. 61/631,746 filed Jan. 10, 2012, that is incorporated by reference herein. This application also claims the benefit of U.S. Provisional Patent Application Ser. No. 61/634,361 filed Feb. 28, 2012, that is incorporated by reference herein.

BACKGROUND OF THE INVENTION

The present invention is directed to structure for joining together parts of a medical implant, in particular to closure mechanisms for use with open bone anchors in spinal surgery, and in some embodiments thereof, for use with spinal bone anchors such as polyaxial screws.

Bone anchors, such as bone screws and hooks are utilized in many types of spinal surgery in order to secure various implants to vertebrae along the spinal column for the purpose of stabilizing and/or adjusting spinal alignment. For example, the most common mechanism for providing vertebral support is to implant bone screws into certain bones which then in turn support a rod or are supported by the rod. Although both closed-ended and open-ended bone anchors are known, open-ended anchors are particularly well suited for connections to longitudinal connecting members such as hard, soft or deformable rods, dynamic or elastic connectors and connector arms, because such rods or other connector members do not need to be passed through a closed bore, but rather can be laid or urged into an open channel within a receiver or head of such a bone anchor. Generally, the anchors must be inserted into the bone as an integral unit or a preassembled unit, in the form of a shank or hook and connected pivotal receiver. In some instances, a portion of such a preassembled unit, such as a shank of a polyaxial bone screw assembly, may be independently implanted into bone, followed by push- or pop-on assembly of a receiver portion of the unit.

Typical open-ended bone screws include a threaded shank with a head or receiver having a pair of parallel projecting branches or arms which form a yoke with a U-shaped slot or channel to receive a rod or other longitudinal connecting member. Hooks and other types of connectors, as are used in spinal fixation techniques, may also include similar open ends for receiving rods or portions of other fixation and stabilization structure. The open-ended head or rod receiver portion of such implants typically includes a pair of spaced arms forming a channel closed by a closure member after the rod or other longitudinal connecting member is placed in the channel. Known closures include slide-on types, twist-on varieties that are rotated ninety degrees to a locked in position, and a variety of single start helically wound guide and advancement structures including, for example, thread forms having v-thread, reverse-angle buttress or square thread forms, to name a few, as well as other non-threadlike helically wound forms. Sometimes threaded plugs are utilized with outer threaded nuts to prevent splaying of the receiver arms.

As indicated above, the force required to press a closure structure down onto a rod or other connector located between arms of an open implant is considerable. Even though a head or receiver portion of an open polyaxial bone anchor may be pivoted in a direction to make it easier for the arms of the open implant to receive a rod or other connector, spinal misalignments, irregularities and the placement of other surgical tools

make it difficult to place the rod or other connector between the arms of the implant while a closure structure is mated with the open implant as well as used to push the rod or other connector downwardly into the implant. For example, when the closure is a cylindrical plug having a single start helically wound guide and advancement structure, such structure must be aligned with mating structure on one of the implant arms and then rotated until a portion of the structure is captured by mating guide and advancement structure on both arms of the implant, all the while the closure is being pressed down on the rod while other forces are pushing and pulling the rod back out of the implant. Integral or mono-axial open implants that cannot be pivoted to receive the rod are even more difficult to manipulate during the initial placement of the rod and initial mating rotation of a closure plug between the spaced, open arms of the implant. Therefore, extraordinary forces are placed on the implant and closure plug while the surgeon either pushes down on the rod or pulls up on the bone to get the rod in position between the implant arms and to initially push down upon the rod with the closure plug.

SUMMARY OF THE INVENTION

A closure structure, top or plug of the invention for insertion between spaced arms of an open medical implant includes one or more helically wound guide and advancement features, each feature having a start surface or structure located at or near a bottom surface of the closure plug, each start structure simultaneously engaging and being captured by each of the spaced arms of the open implant upon initial rotation of the closure structure with respect to the open implant arms. According to an aspect of the invention, a double-start closure is disclosed having two helically wound forms thereon, each form having a start structure for simultaneously engaging a mating helical form on a respective open implant arm. Each time the illustrated duel- or double-start closure plug is rotated one turn (three hundred sixty degrees) between the implant arms, the closure plug advances axially into the implant and toward the rod by a width of two helical forms. The helically wound forms of the multi-start closure spiral around a cylindrical plug body thereof to an extent that the closure rotates over ninety degrees to fully or substantially receive the entire closure plug between the arms of the open implant. The illustrated closure is sized for at least one complete rotation (three hundred sixty degrees) of the plug with respect to the open implant to substantially receive the plug between the implant arms. Multi-start closures of the invention may have two or more coarse or fine helical forms, resulting in fewer or greater forms per axial distance spiraling about the closure plug body and thus resulting in plugs that rotate less (when more coarse) or more (when thin or fine) than one complete rotation to be fully received between the implant arms, typically, at least a ninety-one degree rotation is preferred.

An illustrated multi-start closure and mating open implant is in the form of non-threaded, interlocking flange forms. Also disclosed are multi-start closure structures provided with helically wound forms of other geometry, including, but not limited to helically wound threads such as reverse angle, buttress, square and v-threads. The multi-start closure may be cannulated for minimally invasive surgical applications.

Another illustrated multi-start closure embodiment of the invention is shown with a bone screw assembly having an open receiver with a pair of opposed arms, each arm having guide and advancement structure for simultaneous mating engagement with a start of the helically wound multi-start closure. A further embodiment according to the invention

includes an open bone anchor receiver having integral upwardly extending break-off tabs that also have the guide and advancement structure for mating with the multi-start closure. A further embodiment includes an attachable/detachable guide tool cooperating with such a multi-start open receiver, the tool having inner guide and advancement structures located near a bottom thereof for rotatably and matingly receiving the multi-start closure and being synchronized with the receiver guide and advancement structure for rotating and driving the multi-start closure downward from the guide tool to the receiver.

Objects of the invention further include providing apparatus and methods that are easy to use and especially adapted for the intended use thereof and wherein the tools are comparatively inexpensive to produce. Other objects and advantages of this invention will become apparent from the following description taken in conjunction with the accompanying drawings wherein are set forth, by way of illustration and example, certain embodiments of this invention.

The drawings constitute a part of this specification and include exemplary embodiments of the present invention and illustrate various objects and features thereof.

BRIEF DESCRIPTION OF THE DRAWINGS

FIG. **1** is a perspective view of an embodiment of a multi-start closure according to the invention.

FIG. **2** is another perspective view of the multi-start closure of FIG. **1**.

FIG. **3** is a front elevational view of the closure of FIG. **1** shown with a portion of a receiver of a polyaxial bone screw according to FIG. **8**, the receiver shown in partial front elevation with portions broken away to show the detail thereof, and further showing a rod being pressed upon by the closure, the rod also in partial front elevation with portions broken away to show the detail thereof.

FIG. **4** is a reduced top plan view of the closure of FIG. **1**.

FIG. **5** is a reduced bottom plan view of the closure of FIG. **1**.

FIG. **6** is an enlarged front elevational view of the closure of FIG. **1** with portions broken away to show the detail thereof.

FIG. **7** is a reduced cross-sectional view taken along the line **7-7** of FIG. **6**.

FIG. **8** a partial front elevational view of an open bone screw assembly, with portions broken away to show the detail thereof, including a receiver, a shank, a compression insert and also shown in engagement with the closure top of FIG. **1** (in reduced view) and a longitudinal connecting member in the form of a hard rod.

FIG. **9** is a front elevational view of an alternative closure of an embodiment of the invention, similar to the closure of FIG. **1**, but including a break-off head, the alternative closure shown with a portion of a receiver of the polyaxial bone screw of FIG. **8** shown in enlarged and partial front elevation with portions broken away to show the detail thereof, and further showing a rod being pressed upon by the alternative closure, the rod also in partial front elevation with portions broken away to show the detail thereof.

FIG. **10** is another front elevational view of the closure of FIG. **9** with portions broken away to show the detail thereof.

FIG. **11** is a front elevational view of an alternative square-thread closure of an embodiment of the invention with portions broken away to show the detail thereof, the closure shown with a portion of a receiver of the polyaxial bone screw of FIG. **8** shown in enlarged and partial front elevation with portions broken away to show the detail thereof, and further showing a rod being pressed upon by the alternative closure, the rod also in partial front elevation with portions broken away to show the detail thereof.

FIG. **12** is a front elevational view of an alternative reverse angle closure of an embodiment of the invention with portions broken away to show the detail thereof, the closure shown with a portion of a receiver of the polyaxial bone screw of FIG. **8** shown in enlarged and partial front elevation with portions broken away to show the detail thereof, and further showing a rod being pressed upon by the alternative closure, the rod also in partial front elevation with portions broken away to show the detail thereof.

FIG. **13** is a front elevational view of an alternative v-thread closure embodiment of the invention with portions broken away to show the detail thereof, the closure shown with a portion of a receiver of the polyaxial bone screw of FIG. **8** shown in enlarged and partial front elevation with portions broken away to show the detail thereof, and further showing a rod being pressed upon by the alternative closure, the rod also in partial front elevation with portions broken away to show the detail thereof.

FIG. **14** is a front elevational view of an alternative buttress-thread closure embodiment of the invention with portions broken away to show the detail thereof, the closure shown with a portion of a receiver of the polyaxial bone screw of FIG. **8** shown in enlarged and partial front elevation with portions broken away to show the detail thereof, and further showing a rod being pressed upon by the alternative closure, the rod also in partial front elevation with portions broken away to show the detail thereof.

FIG. **15** is a partial front elevational view of an embodiment of a multi-start open bone anchor receiver of an embodiment of the invention with portions broken away to show the detail thereof, the receiver including break-off tabs.

FIG. **16** is an enlarged and partial front elevational view of the receiver of FIG. **15** with portions broken away to show the detail thereof.

FIG. **17** is a partial front elevational view of an embodiment of a bone anchor receiver having a guide and advancement structure that matingly cooperates with the multi-start closure of FIG. **1**, also shown in front elevation, the receiver having portions broken away to show the detail thereof, and further shown with a guide tool, shown in phantom, the guide tool having a multi-start guide and advancement structure receiving inner surface synchronized with the bone anchor receiver guide and advancement structure.

DETAILED DESCRIPTION OF THE INVENTION

As required, detailed embodiments of the present invention are disclosed herein; however, it is to be understood that the disclosed embodiments are merely exemplary of the invention, which may be embodied in various forms. Therefore, specific structural and functional details disclosed herein are not to be interpreted as limiting, but merely as a basis for the claims and as a representative basis for teaching one skilled in the art to variously employ the present invention in virtually any appropriately detailed structure. It is also noted that any reference to the words top, bottom, up and down, and the like, in this application refers to the alignment shown in the various drawings, as well as the normal connotations applied to such devices, and is not intended to restrict positioning of the bone attachment structures in actual use.

Furthermore, the terms lead, pitch and start, as such terms are used to describe helically wound guide and advancement structures, are to be understood as follows: Lead is a distance along the axis of a closure plug that is covered by one com-

plete rotation (360 degrees) of the closure plug with respect to a mating open implant. Pitch is the distance from a crest (or outer point or location) of one guide and advancement structure form to the next. For example in a single-start thread-form, such as a single start, helically wound v-thread closure plug, lead and pitch are the same. Single start means that there is only one ridge or helically wound form wrapped around a cylindrical core, or in the case of the present invention, wrapped around a cylindrical closure plug body and thus there is only one start structure or surface at a base or forward end of the closure body that initially engages a mating structure on the open implant. Each time a single start closure rotates one turn (360 degrees), the closure has advanced axially by a width of one ridge or one helical form. Double-start means that there are two ridges or forms wrapped around a core body and thus there are two starting surfaces or structures on the closure plug. Therefore, each time a double-start body rotates one turn (360 degrees), such a body has advanced axially by a width of two ridges or forms. Multi-start means that there are at least two and may be up to three or more of such ridges or forms wrapped around a core body.

With reference to FIGS. **1-8**, and in particular to FIG. **8**, the reference number **1** generally represents an open implant in the form of a polyaxial bone screw apparatus or assembly that cooperates with an illustrated closure structure **18** embodiment of the invention. The bone screw assembly **1** is described in detail in U.S. Provisional Patent Application No. 61/631,746 filed Jan. 10, 2012 and incorporated by reference herein (hereafter the '746 application) and therefore will not be described in great detail herein. The description set forth in the '746 application includes a more detailed explanation of all the components referenced in FIG. **8**. It is noted that multi-start closure embodiments of the invention, such as the closure **18** may be used with a variety of open implants including, but not limited to a wide variety of polyaxial screws, mono-axial or fixed screws, hooks and other types of open implants requiring a plug or closure mechanism to fix a rod or other implant member to a vertebra or other bone. Thus, the assembly **1** is only one example of how multi-start closures of the invention may be used.

Briefly, the illustrated assembly **1** includes a shank **4** with an upwardly extending upper portion or capture structure **8**; an open receiver **10**; a retaining structure or retainer (not shown) that pivots with the shank **4**, a compression or pressure insert **14** and the multi-start closure structure or plug **18** in the form of a cylindrical plug having a double-start helically wound flange-form. The closure structure **18** presses against and captures a longitudinal connecting member, for example, a rod **21** which in turn engages the compression insert **14** that presses against the shank upper portion **8** that is attached to the retaining structure that in turn presses against an inner surface of the receiver **10**, so as to capture and fix the longitudinal connecting member **21** within the receiver **10** and thus fix the member **21** relative to a vertebra (not shown). The illustrated receiver **10** and the shank **4** cooperate in such a manner that the receiver **10** and the shank **4** can be secured at any of a plurality of angles, articulations or rotational alignments relative to one another and within a selected range of angles both from side to side and from front to rear, to enable flexible or articulated engagement of the receiver **10** with the shank **4** until both are locked or fixed relative to each other near the end of an implantation procedure.

The illustrated rod **21** is hard, stiff, non-elastic and cylindrical, having an outer cylindrical surface **22**. However, in other embodiments, the rod **21** may be elastic, deformable and/or of a different cross-sectional geometry. The rod **21** may be made from a variety of metals, metal alloys and deformable and less compressible plastics, including, but not limited to rods made of elastomeric, polyetheretherketone (PEEK) and other types of materials, such as polycarbonate urethanes (PCU) and polyethylenes. Furthermore, in lieu of a rod, longitudinal connecting members for use with the assembly **1** may take a variety of shapes, and/or may include a tensioned cord as described in greater detail in the '746 application that is incorporated by reference herein.

It is noted that the receiver **10** includes guide and advancement structures **168** that are shown as interlocking flange forms described in greater detail in applicant's U.S. Pat. No. 6,726,689, also incorporated by reference herein. Alternately, when the closure structure includes a different helical form, the receiver cooperating structures (e.g., **168**) must also be of a cooperating, mating geometry, such as a square-shaped thread receiving form, a buttress thread receiving form, a reverse angle thread receiving form or other thread-like or non-thread-like helically wound discontinuous advancement structure receiving forms for operably guiding under rotation and advancing a multi-start closure structure downward between the receiver arms **160**, as well as eventual torquing when the closure structure abuts against the rod **21** or other connecting member.

With particular reference to FIGS. **1-7**, the illustrated multi-start closure structure **18** is a double start closure having a substantially cylindrical plug body **40** having an axis of rotation that is the same as that of the receiver **10** and including a helically wound guide and advancement structure in the form of a pair of helically wound forms **42** and **43**, each illustrated as an interlocking flange form that operably joins with mating flange form guide and advancement structures **168** disposed on the arms of the receiver **10**. The form **42** includes a start surface or structure **46** and the form **43** includes a start surface or structure **47**. Each helically wound form **42** and **43** may take a variety of forms and geometries, including those described in Applicant's U.S. Pat. No. 6,726,689, which is incorporated by reference herein. It is noted (and also described in greater detail subsequently herein) that each of the closure structure guide and advancement structures or forms **42** and **43** could alternatively be in the form of a buttress thread, a square thread, a reverse angle thread, a v-thread or other thread like or non-thread like helically wound advancement structures, for operably guiding under rotation and advancing the closure structure downward between the arms of the receive 10 and preferably having such a nature as to resist splaying of the receiver arms when the closure structure **18** is advanced into the receiver channel. The specific flange forms **42** and **43** illustrated in FIGS. **1-7**, as well as acceptable alternative locking forms, are described in detail in Applicant's U.S. Pat. No. 6,726,689, incorporated by reference herein, and thus shall not be discussed further herein. Such interlocking flange forms are preferred as the added strength provided thereby beneficially cooperate with and counter any reduction in strength caused by the any reduced profile of the receiver **10** that may more advantageously engage longitudinal connecting member components.

The illustrated closure structure **18** also includes a top surface **54** with an internal drive **56** in the form of an aperture that is illustrated as a star-shaped internal drive such as that sold under the trademark TORX, or may be, for example, a hex drive, or other internal drives such as slotted, tri-wing, spanner, two or more apertures of various shapes, and the like. A driving tool (not shown) sized and shaped for engagement with the internal drive **56** is used for both rotatable engagement and, if needed, disengagement of the closure **18** from the receiver **10** at arms **160**. A base or bottom surface **58** of the

closure is planar and further includes a rim **60** for engagement and penetration into the surface **22** of the rod **21** in certain embodiments of the invention. The closure top **18** further includes a cannulation through bore **62** extending along a central axis thereof and through a drive base surface **63** and the bottom surface **58** thereof. Such a through bore provides a passage through the closure **18** interior for a length of wire (not shown) inserted therein to provide a guide for insertion of the closure top into the receiver arms **160**.

The closure structure **18** helically wound flange form start structures **46** and **47** of the respective forms **42** and **43** are located on opposite sides of the closure plug body **40** and are both located adjacent the bottom surface **58**. As illustrated in FIG. **3**, for example, when the closure structure **18** is rotated into the receiver **10** between receiver arms **160**, each having a guide and advancement structure **168**, the start **46** engages mating guide and advancement structure **168** on one arm **160** and the start **47** simultaneously engages guide and advancement structure **168** on the opposing arm **160**, both forms **42** and **43** being simultaneously captured by the mating forms **168** on the opposed arms **160**. As the structure **18** is rotated, the structure advances axially downwardly between the arms **160** and presses evenly down upon the captured rod **21**. Each time the illustrated duel- or double-start closure plug **18** is rotated one complete turn or pass (three hundred sixty degrees) between the implant arms, the closure plug **18** advances axially into the implant and toward the rod by a width of two helical flange forms. The illustrated closure **18** is sized for at least one complete rotation (three hundred sixty degree) of the plug **18** with respect to the receiver **10** open arms **160** to substantially receive the plug between the implant arms. Multi-start closures of the invention may have two or more coarse or fine helical forms, resulting in fewer or greater forms per axial distance spiraling about the closure plug body and thus resulting in plugs that rotate less or more than one complete rotation to be fully received between the implant arms. Preferably, helically wound forms of the multi-start closure of the invention are sized so as to spiral around a cylindrical plug body thereof to an extent that the closure rotates at least ninety-one degrees to fully or substantially receive the closure plug between the arms of the bone screw receiver or other open implant. Particularly preferred guide and advancement structures are sized for at least one complete turn or pass (three-hundred sixty degree) of the closure between the receiver **10** arms and as many as two to three rotations to be fully received between implant arms.

In use, the receiver **10**, the retainer **12** and the compression insert **14** are assembled with the shank **4** either before or after the shank is implanted into a vertebra, and the resulting assembly **1** is ultimately attached to the rod **21** or other longitudinal connecting member as described in the '746 application incorporated by reference herein. It is noted that the shank **4** and other bone screw assembly parts, the rod **21** (also having a central lumen in some embodiments) and the closure top **18** having the central bore **62** can be inserted in a percutaneous or minimally invasive surgical manner, utilizing guide wires. After the rod **21** or other longitudinal connecting member is positioned in an open or percutaneous manner in cooperation with the at least two bone screw assemblies **1** (or other open implants), the closure structure **18** is then inserted into and advanced between the arms **160** of each of the receiver **10**. The closure structure **18** is rotated, using a tool engaged with the inner drive **56** until a selected pressure is reached at which point the rod **21** engages a U-shaped seating surface of the compression insert **14**, further pressing the insert against the shank upper portion **8** and attached retainer into locked frictional engagement with the receiver **10**. Prior to locking the insert **14** against the shank head **8**, the shank **4** may be pivoted to a plurality of potentially desirable positions with respect to the receiver **10**, followed by locking of the polyaxial mechanism by fully mating the multi-start closure top **18** with the receiver **10**. Different angular or articulated positions of the shank **4** with respect to the receiver **10** are shown in the '746 application incorporated by reference herein.

With specific reference to FIGS. **3** and **8**, as the multi-start closure structure **18** rotates and moves downwardly into the respective receiver **10**, the rim **60** engages and penetrates the rod surface **22**, the closure structure **18** pressing downwardly against and biasing the rod **21** into compressive engagement with the insert **14** that urges the shank upper portion **8** and attached retainer into locking engagement with the receiver, the retainer outer surface frictionally abutting an inner spherical seating surface of the receiver **10**. For example, about 80 to about 120 inch pounds of torque on the closure top may be applied for fixing the bone screw shank **6** with respect to the receiver **10**. Also, for example, when the shank **4** is disposed at an angle with respect to the receiver **10**, a part of the shank upper portion **8** may also be in frictional engagement with a portion of the receiver spherical seating surface.

If removal of the rod **21** from any of the bone screw assemblies **1** is necessary, or if it is desired to release the rod **21** at a particular location, disassembly is accomplished by using the driving tool (not shown) that mates with the internal drive **56** on the closure structure **18** to rotate and remove such closure structure from the cooperating receiver **10**. Disassembly is then accomplished in reverse order to the procedure described previously herein for assembly.

With reference to FIGS. **9** and **10**, an alternative closure top **18'** is shown that is almost identical to the closure top **18**. However, the top **18'** differs from the top **18** in that the top **18'** includes a break-off head **70'** that further includes a top surface **72'** having tooling notches **73'**, an outer faceted driving surface **74'**, illustrated as having a hex-shaped profile, and an inner bore **76'**. Otherwise, the closure top **18'** includes a body **40'**, a first helical form **42'**, a second helical form **43'**, a body top surface **54'**, a body internal drive **56'**, a base **58'**, a rim **60'**, a cannulation bore **62'** and a drive base surface **63'** that is the same or substantially similar to the respective body **40**, first helical form **42**, second helical form **43**, body top surface **54**, internal drive **56**, base **58**, rim **60**, cannulation bore **62** and drive base surface **63** previously described herein with respect to the closure top **18**. The break-off head **70'** is integral with the body **40'** at the body top surface **54'**. The inner bore **76'** communicates with the inner drive **56'** and the cannulation bore **62'**. The break-off head **70'** is designed to allow such head **70'** to break from the body **40'** at or near the top surface **54'** at a preselected torque, for example, 70 to 140 inch pounds, when a hex-shaped tool (not shown) engages the outer surfaces **74'** and drives the closure structure **18'** into the receiver **10** as shown in FIG. **9**. The inner drive **56'** is used for disassembly or loosening of the closure **18'** from the receiver **10**, and re-tightening, if needed.

With reference to FIG. **11**, another alternative multi-start closure top **318** is shown that is almost identical to the closure top **18** with the exception that the two flange forms **42** and **43** with respective starts **46** and **47** have been replaced with square threads **342** and **343** with respective starts **346** (not shown) and **347**. Otherwise, the dual or double start closure top **318** includes a body **340**, a body top surface **354**, a body internal drive **356**, a base **358**, a rim **360'**, a cannulation bore **362** and a drive base surface **363** that is the same or substantially similar to the respective body **40**, body top surface **54**, internal drive **56**, base **58**, rim **60**, cannulation bore **62** and

drive base surface **63** previously described herein with respect to the closure top **18**. In FIG. **11**, the closure top **318** is shown partially wound into a polyaxial bone screw receiver **310** having opposed arms **360** with inner surfaces equipped with guide and advancement structures **368** that are sized and shaped to simultaneously closely receive and mate with the square threads **342** and **343** of the double closure structure **318**. Otherwise, the receiver **310** is identical or substantially similar to the receiver **10** described in detail in the '746 application incorporated by reference herein.

With reference to FIG. **12**, an alternative multi-start closure top **418** is shown that is almost identical to the closure top **18** with the exception that the two flange forms **42** and **43** with respective starts **46** and **47** have been replaced with reverse angle threads **442** and **443** with respective starts **446** (not shown) and **447**. Otherwise, the dual or double start closure top **418** includes a body **440**, a body top surface **454**, a body internal drive **456**, a base **458**, a rim **460'**, a cannulation bore **462** and a drive base surface **463** that is the same or substantially similar to the respective body **40**, body top surface **54**, internal drive **56**, base **58**, rim **60**, cannulation bore **62** and drive base surface **63** previously described herein with respect to the closure top **18**. The closure top **418** is shown partially wound into a polyaxial bone screw receiver **410** having opposed arms **460** with inner surfaces equipped with guide and advancement structures **468** that are sized and shaped to simultaneously closely receive and mate with the reverse angle threads **442** and **443** of the double start closure structure **418**. Otherwise, the receiver **410** is identical or substantially similar to the receiver **10** described in detail in the '746 application incorporated by reference herein.

With reference to FIG. **13**, another alternative multi-start closure top **518** is shown that is almost identical to the closure top **18** with the exception that the two flange forms **42** and **43** with respective starts **46** and **47** have been replaced with v-threads **542** and **543** with respective starts **546** (not shown) and **547**. Otherwise, the dual or double start closure top **518** includes a body **540**, a body top surface **554**, a body internal drive **556**, a base **558**, a rim **560'**, a cannulation bore **562** and a drive base surface **563** that is the same or substantially similar to the respective body **40**, body top surface **54**, internal drive **56**, base **58**, rim **60**, cannulation bore **62** and drive base surface **63** previously described herein with respect to the closure top **18**. The closure top **518** is shown partially wound into a polyaxial bone screw receiver **510** having opposed arms **560** with inner surfaces equipped with guide and advancement structures **568** that are sized and shaped to simultaneously closely receive and mate with the threads **542** and **543** of the double start closure structure **518**. Otherwise, the receiver **510** is identical or substantially similar to the receiver **10** described in detail in the '746 application incorporated by reference herein.

With reference to FIG. **14**, another alternative multi-start closure top **618** is shown that is almost identical to the closure top **18** with the exception that the two flange forms **42** and **43** with respective starts **46** and **47** have been replaced with buttress threads **642** and **643** with respective starts **446** and **447** (not shown). Otherwise, the dual or double start closure top **618** includes a body **640**, a body top surface **654**, a body internal drive **656**, a base **658**, a rim **660'**, a cannulation bore **662** and a drive base surface **663** that is the same or substantially similar to the respective body **40**, body top surface **54**, internal drive **56**, base **58**, rim **60**, cannulation bore **62** and drive base surface **63** previously described herein with respect to the closure top **18**. The closure top **618** is shown partially wound into a polyaxial bone screw receiver **610** having opposed arms **660** with inner surfaces equipped with guide and advancement structures **668** that are sized and shaped to simultaneously closely receive and mate with the buttress threads **642** and **643** of the double start closure structure **618**. Otherwise, the receiver **610** is identical or substantially similar to the receiver **10** described in detail in the '746 application incorporated by reference herein.

With reference to FIGS. **15** and **16**, an open receiver **710** is illustrated that is substantially similar to the receiver **10** previously described herein with the exception that the receiver **710** includes opposed arms **760**, each having an integral upstanding break-off extension **761**. Each receiver arm **760** and integral extension **761** has an inner helically wound guide and advancement structure **768** that is sized and shaped to mate with the flange forms **42** and **43** of the dual start closure **18** previously described herein. The break-off extensions **761** are initially integral with the respective arms **760** and are then broken off by a user after the closure **18** has been rotatingly advanced along the arm extensions **761** and into the channel located between the receiver arms **760**. In the illustrated embodiment, in addition to an outer groove or notch **770** located at or near a top surface **769** of each of the arms **760** where the extensions **761** break off from the receiver arms, illustrated inner arm surfaces include a recess or cut **771**, best shown in FIG. **16**, that runs substantially horizontally. Each recess **771** is curved and elongate and disposed somewhat cross-wise or transverse to the respective flange form **768**. For example, with reference to the arm **760** shown in FIG. **16**, the recess **771** cuts into a weakened region, generally. **780**, where the arm **760** joins with the respective attached adjacent extension **761**, the curved and elongate recess **771** beginning at a lower portion or location **781** of the flange form recess or segment and terminating at an opposed upper end location of the flange form segment, while otherwise leaving the flange form **768** intact. Stated in another way, the substantially horizontally extending recess **771** cuts into both a lead portion and a trailing portion of each of the flange form segments located near and directly above the opposed arms **760** and substantially opposite the notch **770**, thus further weakening the region where the extension and the arm attach, without destroying the flange form path, so that the closure **18** is not derailed by the recess **771** or otherwise prohibited from moving downwardly into the receiver channel formed between the receiver arms **760**.

With reference to FIG. **17**, the multi-start closure **18** is shown cooperating with a spinal implant receiver, such as a bone screw receiver **10'** and a discrete, detachable guide tool **801**. The elongate guide tool **801**, only partially shown in FIG. **17**, is typically sized for extending from the bone screw receiver **10'** upwardly to a location outside of a patient, the tool providing a guide channel for operably guiding the rod **21** or other longitudinal connecting member from a position exterior of the bone screw receiver **10'** toward and into the bone screw receiver **10'**. The illustrated guide tool has opposed arms **805**, each arm having a helical guide and advancement structure **810** thereon that is illustrated as a square thread form, but may be of other geometry, including a flange form the same or similar to the flange forms **168'** of the receiver **10'** that mates with the flange forms **42** and **43** of the closure structure **18**. Thus, the illustrated structures **810** are sized and shaped for receiving and rotating engagement with a dual start closure. The closure **18** is shown partially wound into the receiver **10'** that is identical or substantially similar to the receiver **10** with the exception of certain outer arm surface features (not shown). Thus, the receiver **10'** includes opposed arms **160'** with inner surfaces having guide and advancement structures **168'** that are sized and shaped to simultaneously closely receive and mate with the flange

forms **42** and **43** of the dual start closure structure **18**. The guide tool **801** includes attachment structure for detachable attachment to the receiver **10'**(not shown), that may take a variety of forms and methods, including, but not limited to a slide-on, slide-off attachment, a snap-on, rotate off attachment, a rotate-on and rotate-off attachment, to name a few. For example, cooperating attachment structure for both the tool and the receiver may be used that is disclosed in U.S. Pat. No. 7,470,279 and incorporated by reference herein. Returning to the inner helically wound guide and advancement structure **810** formed on each arm **804** of the guide tool **801**, the structure **810** is sized and shaped for being aligned with the receiver arms **160'** during removable attachment of the tool **801** with the respective bone screw receiver **10'** so as to continue the helical pathway for the closure **18**, the structures **810** being synchronized with the flange forms **168'** to allow for the rotation and driving transfer of the closure **18** from the tool **801** into the receiver **10'**.

It is to be understood that while certain forms of the present invention have been illustrated and described herein, it is not to be limited to the specific forms or arrangement of parts described and shown.

The invention claimed is:

1. In a medical implant having a substantially cylindrical closure member and a receiver member having first and second spaced arms forming an open channel, the closure member having an axis of rotation for closing the open channel, the improvement comprising:

a) first and second helically wound forms located on the closure member, the first form having a first start and the second form having a second start; and

b) a first discontinuous helically wound structure on the receiver first arm and a second discontinuous helically wound structure on the receiver second arm and wherein simultaneous mating of the first start with the arm first helically wound structure and the second start with the arm second helically wound structure occurs when the closure member is rotated between the first and second arms of the receiver member.

2. The improvement of claim **1** wherein the first and second helically wound forms are each a flange form that interlocks with the respective helically wound structures on the receiver.

3. The improvement of claim **1** wherein the first and second helically wound forms are v-threads.

4. The improvement of claim **1** wherein the first and second helically wound forms are square threads.

5. The improvement of claim **1** wherein the first and second helically wound forms are reverse angle threads.

6. The improvement of claim **1** wherein the first and second helically wound forms are buttress threads.

7. The improvement of claim **1** wherein the closure member has a break-off head.

8. The improvement of claim **1** wherein the receiver has break-off extensions.

9. The improvement of claim **1** further comprising a guide tool having third and fourth arms detachably attached to the receiver, the guide tool having a third discontinuous helically wound structure on the guide tool third arm and a fourth discontinuous helically wound structure on the guide tool fourth arm and wherein simultaneous mating of the first start with the third helically wound structure and the second start with the fourth helically wound structure occurs when the closure member is rotated between the third and fourth arms of the guide tool, the guide tool third and fourth helically wound structures sized and shaped to provide transfer of the closure member between the guide tool and the bone screw upon rotation of the closure.

10. A medical implant comprising:

a) a receiver having a body and a pair of upstanding spaced arms forming a channel for receiving a longitudinal connecting member, each arm having an inwardly facing surface with a first discontinuous helically wound guide and advancement structure located thereon; and

b) a closure structure having a cylindrical body and a second helically wound guide and advancement structure having at least two starts.

11. The implant of claim **10** wherein the first and second helically wound guide and advancement structures are interlocking flange forms.

12. The improvement of claim **10** wherein the second helically wound guide and advancement structure includes at least two v-threads.

13. The improvement of claim **10** wherein the second helically wound guide and advancement structure includes at least two square threads.

14. The improvement of claim **10** wherein the second helically wound guide and advancement structure includes at least two reverse angle threads.

15. The improvement of claim **10** wherein the second helically wound guide and advancement structure includes at least two buttress threads.

16. The improvement of claim **10** wherein the closure structure has a break-off head.

17. The improvement of claim **10**, wherein the receiver has break-off extensions.

18. In a medical implant, the improvement comprising:

a) an open receiver member with spaced arms having inwardly facing surfaces, each with a helically wound guide and advancement form located thereon; and

b) a helically wound multi-start closure member having an axis of rotation, the closure member rotatably mounted on the receiver member at the spaced arm inwardly facing surfaces.

19. The improvement of claim **18** wherein the multi-start closure is a double-start closure.

20. The improvement of claim **18** wherein the multi-start closure includes at least two helically wound forms, each form being one of a flange form, a v-thread, a square thread, a reverse angle thread and a buttress thread, the form mating with the first helically wound guide and advancement form.

21. In a polyaxial bone anchor having a shank and a receiver, the shank being pivotable with respect to the receiver prior to locking of a position of the shank with respect to the receiver, the improvement wherein:

a) the receiver has spaced arms having inwardly facing surfaces, each surface having a helically wound guide and advancement form located thereon, each guide and advancement form being sized and shaped to mate with a helically wound multi-start closure member having at least two starts.

22. The improvement of claim **21** further comprising an attachable and detachable guide tool cooperating with the receiver, the guide tool having at least two arms, each arm having helically wound guide and advancement structure thereon in synchronized relationship with the receiver helically wound guide and advancement forms to provide transfer of the multi-start closure member between the guide tool and the bone anchor upon rotation of the closure.

* * * * *