US 20040162560A1

(19) United States

(12) Patent Application Publication (10) Pub. No.: US 2004/0162560 A1

Raynor et al. (43) Pub. Date: Aug. 19, 2004

(54) IMPLANT DEVICE INCLUDING THREADED LOCKING MECHANISM

(76) Inventors: **Donald E. Raynor**, Burlison, TN (US); **James W. Adams**, Atoka, TN (US)

Correspondence Address:
Kenneth I. Kohn
Kohn & Associates, PLLC
30500 Northwestern Highway, Suite 410
Farmington Hills, MI 48334 (US)

(21) Appl. No.: **10/369,158**

(22) Filed: **Feb. 19, 2003**

Publication Classification

(51) **Int. Cl.**[7] **A61B 17/56**

(52) **U.S. Cl.** **606/73**; 606/72

(57) **ABSTRACT**

A medical device assembly includes a rod receiving member for receiving a portion of a rod member therein. A locking member locks the rod member in place in the rod receiving member. A gripping mechanism between threads in the rod receiving member and threads in the locking member prevent splaying of the threads when the threads are threadedly entrained together.

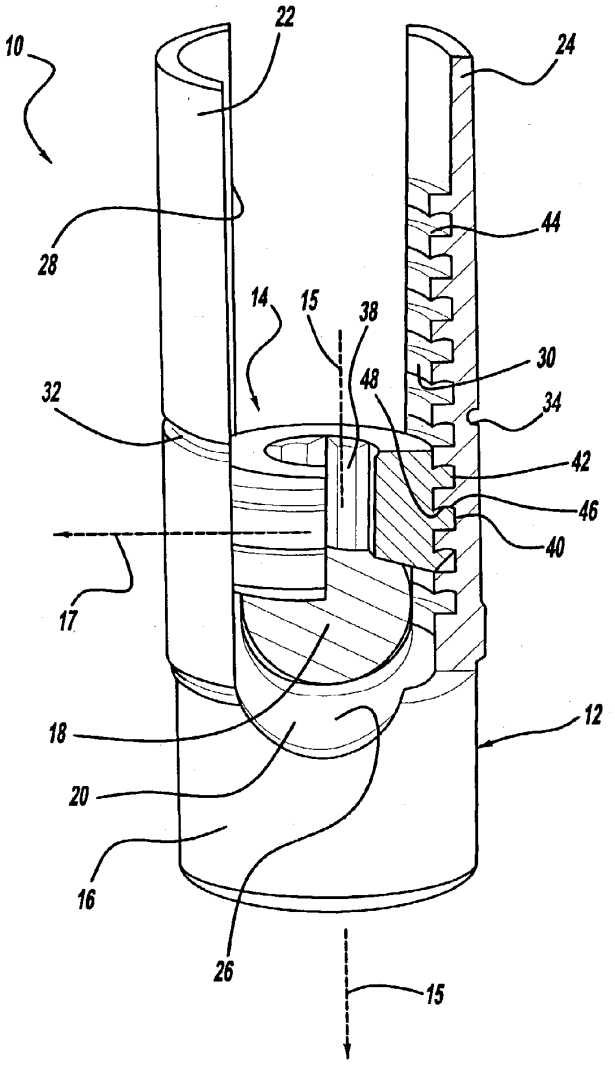

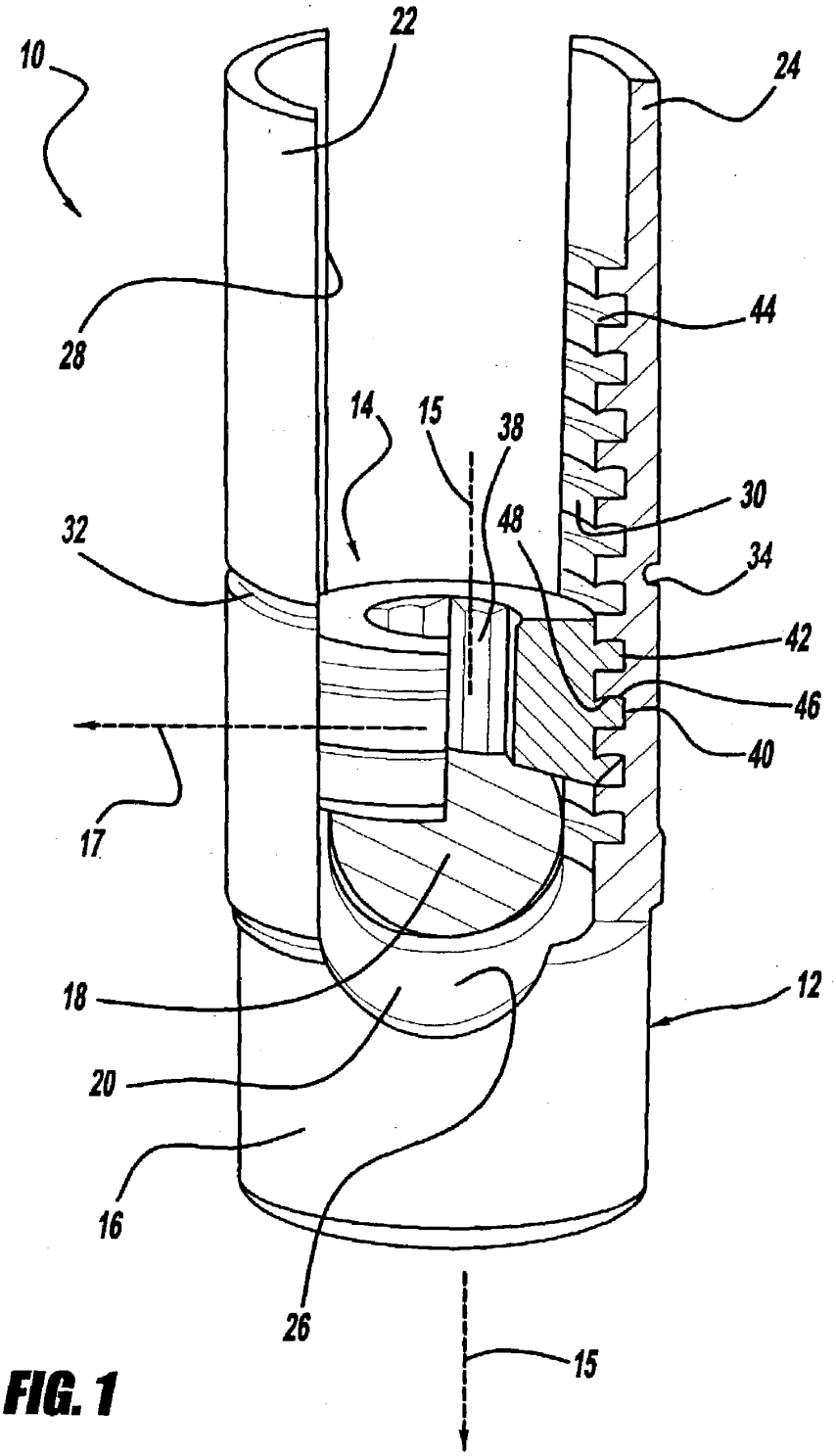

FIG. 1

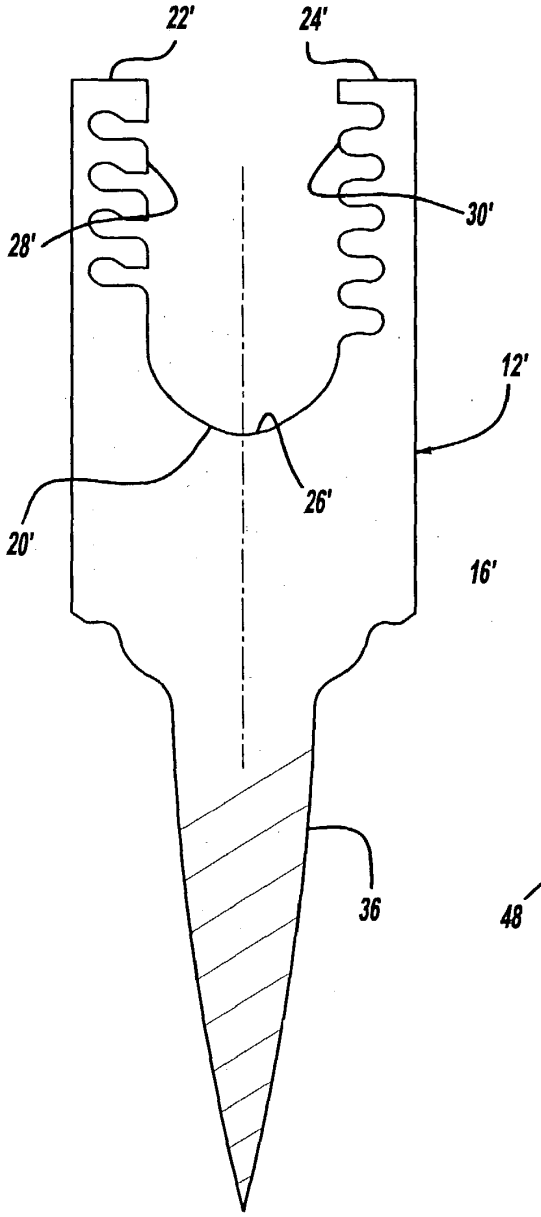

FIG. 2

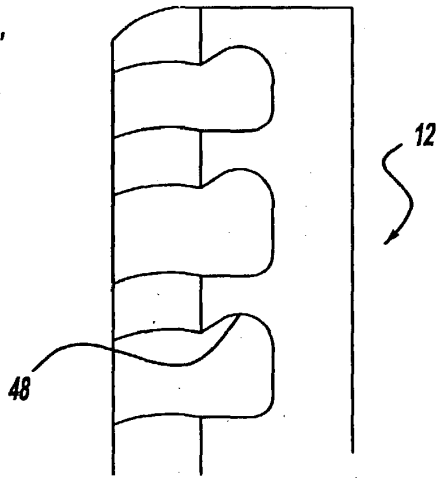

FIG. 3

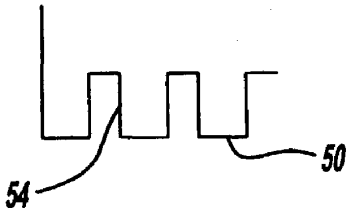

FIG. 4A

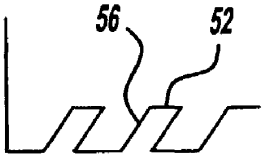

FIG. 4B

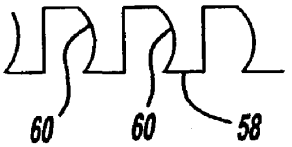

FIG. 4C

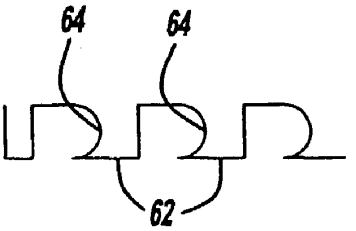

FIG. 4D

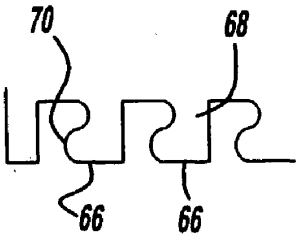

FIG. 4E

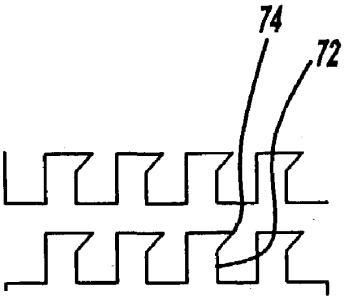

FIG. 4F

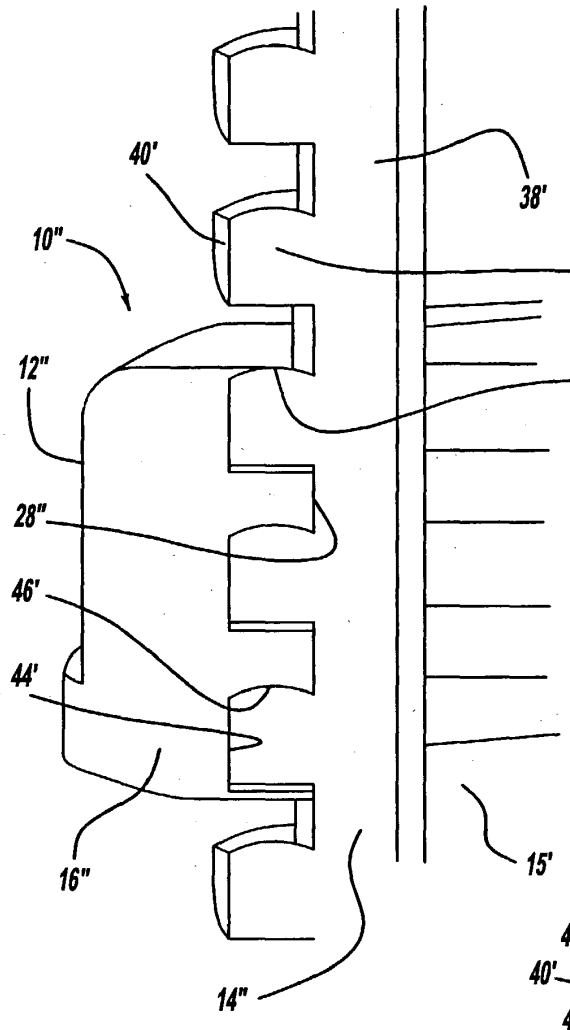

FIG. 5

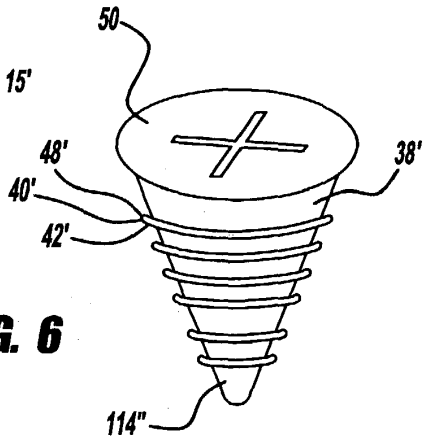

FIG. 6

IMPLANT DEVICE INCLUDING THREADED LOCKING MECHANISM

BACKGROUND OF THE INVENTION

[0001] 1. Technical Field

[0002] The present invention relates to screw thread designs. More specifically, the present invention relates to screws disposed in thin walled retainers, and especially for use in medical devices.

[0003] 2. Background Art

[0004] In various industries, threaded devices, such as set screws, are commonly used. Set screws are used in many environments in order to lock one element of a device relative to another. Set screws are quite important in the art of medical implants, as it is often necessary to capture one element of the implant relative to another and to then lock the two relative to one another to prevent subsequent movement therebetween. Failure to properly lock two elements of a medical implant together may result in failure of the implant and possible serious injury to the patient within which the implant is placed. For example, in orthopedic devices, a rod is often loaded into a recess or channel of a retaining member, such as a fixation element or the like. Such a device is disclosed in U.S. Pat. No. 6,296,642 to Morrison, et al., issued Oct. 2, 2001. As discussed in the Morrison, et al. patent, a difficulty that has been experienced in the orthopedic device industry, as well as in other non-related industries, is that the configuration of many devices requires a threaded device, such as a set screw, to be disposed between upright arms or thin walled sections of a body portion. These sections can experience splaying after implantation.

[0005] An inherent problem in certain devices, such as medical implants, with set screws of a conventional type is that such set screws typically utilize threads which are referred to as V-threads. The edges of a cross-section of V-threads have a V shape. V-threads work reasonably well in devices including a bore that completely surrounds the set screw and has a mating thread that mates with the thread of the set screw. As stated above, many devices, such as bone screws, do not provide for a bore that will entirely encircle the set screw. In such implants, the set screw also functions as a closure and spans between a pair of discontinuous threaded surfaces. When V-thread set screws are utilized for this purpose, the forces exerted by the set screw during torquing are partially parallel to the axis of rotation of the set screw and partially radially extending outwardly from the set screw. These radial outward forces can and frequently do spread the discontinuous threaded surfaces which causes failure of the threaded locking mechanism. The resulting splaying of the discontinuous threaded surface is a major problem.

[0006] To prevent splaying, prior medical devices have included a nut, cap, clamp or similar apparatus to surround and hold the legs of the fixation element together. For example, in U.S. Pat. No. 5,672,176 to Biedermann, et al., a rod is placed into a slot in the fixation element. The locking member is engaged with the fixation element to press down via an intermediary part on the rod. An outer nut is threaded on the outside of the fixation element. Although effective in controlling splaying, these devices have tended to be relatively more expensive and less efficient to implant compared with devices without an outer nut or cap. The outer nut or cap also adds to the profile of the medical device, making the device more difficult to implant in the frequently limited area in which to perform surgery and/or place an implant. A larger implant can also result in a higher risk of residual pain to the patient or potential complications.

[0007] Buttress-type threads have been utilized for the purpose of trying to reduce the radial outward forces that are exerted by the threads. In buttress-type thread screws, the trailing surface of the thread normally has a cross-section edge that is parallel to or is fairly close to being parallel to a radius of the set screw. Sometimes such surfaces are referred to as flat, but normally the cross section has a slight inclination of from 5 to 10 degrees so that a smaller, but yet substantial force, is exerted radially outward by the buttress thread screws as compared to the V-shaped thread screws. Consequently, it is desirable to also have a set screw of this type wherein the threads are designed to exert an inwardly directed force to pull opposing walls of an implant toward the set screw, rather than urge the walls away from the set screw.

[0008] It is also necessary for the set screw to tightly grip whatever element it is urged against so as to lock that element relative to a second element within which the set screw is threaded. Such locking is partially provided by friction. Positive penetration of the set screw into the element to be set assists in the locking and provides for a more secure lock. A smooth circular surface on the underside of the set screw does not provide digging into or abrasion of the element to be locked and such smooth bottom set screws must rely solely upon the friction generated between a fairly smooth surface and the other element, such as a rod for secure locking. In order to overcome this problem, the prior art has utilized various structures on the end of the set screw such as points, knurling and cutting rings.

[0009] There is therefore a need remaining in industry, especially for medical devices, and particularly orthopedic devices, which minimize the profile and bulk of the components of the device and minimizes the cost and difficulty of using such devices, while still preventing splaying of the fixation elements.

SUMMARY OF THE INVENTION

[0010] According to the present invention, there is provided a medical device including a rod receiving mechanism for receiving a portion of a rod member therein and a locking mechanism for locking the rod member in place in the rod receiving mechanism. A gripping mechanism grips a first thread of the rod receiving mechanism with a second thread of the locking mechanism when the threads are threadedly engaged and prevents splaying of the threads when the threads are threadedly entrained together.

DESCRIPTION OF THE DRAWINGS

[0011] Other advantages of the present invention are readily appreciated as the same becomes better understood by reference to the following detailed description when considered in connection with the accompanying drawings wherein:

[0012] **FIG. 1** is a prospective view of the medical device of the present invention;

[0013] **FIG. 2** is a side view of the receiving member of the present invention;

[0014] **FIG. 3** is an enlarged view of the thread of the receiving member shown in **FIG. 2**;

[0015] FIGS. **4**A-F are cross-sectional views of variations of the thread made in accordance with the present invention;

[0016] **FIG. 5** is an enlarged side view, partially broken away, of a screw and nut of the present invention; and

[0017] **FIG. 6** is a prospective schematic view of the screw of the present invention.

DETAILED DESCRIPTION OF THE INVENTION

[0018] The present invention generally relates to a thread configuration for use in many applications, and with particular value in medical devices. The preferred embodiments discussed herein are surgical implants. However, the inventive thread configuration of the present invention possesses wide spread applicability beyond medical devices.

[0019] A preferred embodiment of the present invention in the environment of a medical device is generally shown at **10** in the Figures. The device **10** includes a rod receiving member generally indicated at **12** and a locking member in the form of a set screw generally indicated at **14**. The threads of the rod receiving member **12** and set screw **14** grip each other and thereby prevent splaying of the threads when the threads are threadedly entrained together, as shown in **FIG. 1**. This "gripping" between the threads of the rod receiving member **12** and set screw **14** eliminate or at least significantly reduce spreading of the thin walls of the rod receiving member **12**, as explained in more detail below.

[0020] The term "gripping" means that the threads not only engage each other in a direction parallel to the longitudinal axis **15** of the set screw **14**, but also engage each other in a direction **17** radially extending from the longitudinal axis **17**. Thus, the set screw **14** is longitudinally fixed and the gripping of the threads prevents separation of the threads in a radial direction **17**, relative to the longitudinal axis.

[0021] More specifically, a rod receiving member includes a body portion **16** including a substantially U-shaped recess for receiving a rod member **18** therein, as shown in **FIG. 1**. The substantially U-shaped recess is defined by a base portion **20** of the recess and a pair of arms **22**, **24**. The base portion **20** includes an arcuate surface **26**, which is substantially smooth. Each of the arms **22**, **24** includes a threaded inner surface **28**, **30**, respectively.

[0022] The rod receiving member can assume various specific forms, two of which being shown in **FIGS. 1 and 2**. In **FIG. 1**, the locking member includes extended arms **22** and **24**, each of the arms **22**, **24** including an indent or recess **32**, **34** allowing for easy breaking off of the extended portion of the arms **22**, **24**. The extended arms **22**, **24** allow for easier access of the set screw **14**. Once the set screw **14** is in place, that being in locked condition against the rod **18** disposed within the recess of the rod retaining member **12**, then the indents **32**, **34** allow for easy breaking off of the extended portion of the arms **22**, **24**. In this manner, the profile of the final assembly **10** is much smaller and more adaptable to remain in place within the patient.

[0023] In **FIG. 2**, like structures between the two embodiments are shown by prime numbers. The rod receiving member **12'** includes an integral threaded screw portion **36** for direct engagement with a bone, such as a vertebrae. Other multiple piece embodiments, such as those shown in U.S. Pat. No. 5,964,760 to Richelsoph, and assigned to the assignee of the presently pending application, can also be used, such as set screws having spherical heads and the rod retaining member **12** including a receiving portion for variable angular adjustment relative to the screw head. In other words, the present invention can be used with various modifications of the rod receiving member that are well known in the art.

[0024] The set screw **14** includes a body portion **38** having a threaded outer surface **40** as shown in **FIG. 1**. The threaded outer surface **40** of the screw member is in threaded engagement with the threaded inner surfaces **28**, **30** of the arms **22**, **24** so as to be screwed into locked engagement with the rod member **18** seated against the arcuate surface **26** of the base portion **20**. The threaded surface **40** includes threads **42**, which grip in mating engagement with the threads **44** of the arms **22**, **24**. This "gripping" prevents the arms **22**, **24** from splaying from or being ripped away from engagement with the threads of the set screw **14**.

[0025] More specifically, the threads **42**, **44** of the present invention generally include a curved portion which mates and engages a curved portion of a mating thread. Such curvatures can be inverted and function in accordance with the present invention. However, there are benefits, discussed below, derived from the rod receiving member **12** including internal threads **44** and a curved, concave portion cut into a recess which forms the remainder of the thread. The curved portion is upwardly facing away from the seat of the screw member **38**. This curvature provides that the curved portion of the internal thread will engage the external curved portion of the set screw member **38** under load conditions.

[0026] **FIG. 1** shows the assembled device **10** retaining the rod member **18**. The set screw **38** is engaged in the rod receiving member **12** of the implant assembly **10**. The concave portion **46** of the thread **40** of the set screw **38** engages the convex portion **48** of the thread **40** of the arms **22**, **24**. Since the convex portion **48** extends well into the concavity, the engagement can eliminate, or at least significantly reduce spreading of the thin walled arms **22**, **24** (radially outward extension of arms **22**, **24**), thereby reducing or solving a significant problem of the prior art.

[0027] Also of importance is the friction reduction value of the thread of the present invention. Since the thread engagement surface is a rounded bearing surface, the friction is reduced over threads existing in the prior art. As friction is a major factor in reducing screw thread-type connector efficiency, reducing friction increases the amount of available energy to lock the assembly. Since the amount of force it takes to lock an implant with existing technology and threads can be very high, it is highly advantageous to find a more efficient thread form. The unique thread form of the present invention solves many of the issues and problems associated with existing thread technology.

[0028] FIGS. **4**A-F shows various permutations of the present invention. Prior art threads as shown in Figures A and B include teeth **50**, **52** having straight-sided walls **54**, **56**

respectively. There is no gripping of such teeth when entrained or threaded into mating engagement with a receiving thread.

[0029] Figures C, D, E, and F in **FIG. 4** are examples of various teeth configurations which allow for the gripping function of the present invention. **FIG. 4C** shows teeth **58** having radius sides **60**. Such teeth do not require great depth in order to function in accordance with the present invention. **FIG. 4D** shows teeth **62** having a side **64**. Each side **64** has a radius with a height of cord in its center. In this manner, forces are kept outside the vertical and the teeth ride on their bearing surfaces. Such teeth configuration does not require great depth and leaves maximum wall strength for the body, the teeth locking on their radius. **FIG. 4E** shows teeth **66** having what is referred to as a dog bone configuration. The teeth **66** include a thinner base portion **68** and a projecting portion at the end of the tube **70** for mating engagement in a like recess a mating thread. The dog bone configuration can have an end portion with a radius as shown in **FIG. 4E** or such a thread **72** can have an angled end portion **74** as shown in **FIG. 4F**.

[0030] In operation, the rod retaining member is affixed in situ by means well known in the art. For example, a rod retaining member **12'** shown in **FIG. 2** can be threadedly engaged or screwed into a vertebra by a practitioner. The portion of the rod member **18** is disposed within the recess of the rod retaining member **12** as shown in **FIG. 1** and the set screw **38** screwed into engagement and locked against the rod member **18**. The mating curved thread **40** of the set screw member **38** grips the curvature of the inner aspect of the thread **28**, **30** of the arms **22**, **24**. In this manner, the set screw member **38** functions to **1)** lock the rod member **18** in place; **2)** grip the threads of the retaining member **12**, prevent splaying of the arms **22**, **24** relative to the set screw member **38**; and **3)** provide increased efficiency during the screwing and locking process.

[0031] The present invention has widespread use in many industries. The goal of many industries is to reduce weight of devices and/or cost of production. For example, the automotive industry over the past twenty years has been constantly moving towards thin walled components. The above discussed issue of splaying is a great concern where various threaded elements are disposed within retainers wherein the retainer is a thin walled component. The present invention has great applicability in such uses, thereby eliminating weight of components, the need of extra components to prevent splaying, etc.

[0032] In an alternative embodiment of the present invention, the device **10** includes a nut **12"** and a locking member in the form of a screw generally indicated at **14"**. The threads of the nut **12"** and screw **14"** grip each other and thereby prevent splaying of the threads when the threads are threadedly entrained together, as shown in **FIG. 5**.

[0033] The nut **12"** includes a body portion **16"** including a recess for receiving a screw **14"** as shown in **FIG. 5**. The nut **12"** is shaped sufficiently to encompass the screw **14"**. The nut **12"** includes a threaded inner surface **28"**. The threaded inner surface **28"** includes threads **42"**having a curved portion that mates and engages a curved portion of the mating thread. Such curvatures can be inverted and function in accordance with the present invention. In the preferred embodiment, the recess **42'** includes a concave portion **46'**.

[0034] The set screw **14"** includes a body portion **38'** having a threaded outer surface **40'**, as shown in **FIG. 6**. The threaded outer surface **40'** of the screw is in threaded engagement with the threaded inner surfaces **28"** of the nut **12"**. The threaded surface **40'** includes threads **42'**, which grip in mating engagement with the threads **44'** of the nut **12"**. This "gripping" prevents the nut from splaying or being ripped away from engagement with the threads of the set screw **14"**.

[0035] **FIG. 5** shows the assembled device **10'**. The set screw **14"** is engaged in the nut **12"**. The concave portion **46'** of the thread **40'** of the set screw **38'** engages the convex portion **48'** of the thread **40'** of the nut **12"**. Since the convex portion **48'** extends well into the concavity, the engagement can eliminate, or at least significantly reduce spreading of the nut **12"**.

[0036] Throughout this application, various publications, including United States patents, are referenced by author and year and patents by number. Full citations for the publications are listed below. The disclosures of these publications and patents in their entireties are hereby incorporated by reference into this application in order to more fully describe the state of the art to which this invention pertains.

[0037] The invention has been described in an illustrative manner, and it is to be understood that the terminology, which has been used is intended to be in the nature of words of description rather than of limitation.

[0038] Obviously, many modifications and variations of the present invention are possible in light of the above teachings. It is, therefore, to be understood that within the scope of the appended claims, the invention can be practiced otherwise than as specifically described.

REFERENCES

[0039] Foreign Patents:

[0040] DE 101 57969C1

What is claimed is:

1. A set screw comprising:

a body portion having an outer surface and a first thread disposed on said outer surface, said thread including gripping means for gripping a second thread into which said first thread is threadedly entrained to prevent splaying of said two engaged threads.

2. The set screw according to claim 1 wherein said gripping means includes a curvate portion of said first thread.

3. The set screw according to claim 2 wherein said curvate portion extends over said entire first thread.

4. The set screw according to claim 2 wherein said curvate threads are in a shape selected from the group including a single curved side, two curved sides, and a dog bone configuration.

5. A receiver member comprising a body portion including a substantiated U-shaped recess for receiving a rod member therein, said recess including an internal threaded portion including gripping means for gripping a threaded portion of a set screw in threaded engagement engaged therewith to prevent splaying of said of said engaged threads.

6. The receiver member according to claim 5 wherein said gripping means includes a curvate portion of said first thread.

7. The receiver member according to claim 6 wherein said curvate portion extends over said entire first thread.

8. The receiver member according to claim 6, wherein said curvate threads are in a shape selected from the group including a single curved side, two curved sides, and a dog bone configuration.

9. A medical device comprising:

a rod receiving means for receiving a portion of a rod member therein and locking means for locking the rod member in place in said rod receiving means and gripping means for gripping a first thread of said rod receiving means with a second thread of said locking means when the threads are threadedly engaged and preventing splaying of said threads when said threads are threadedly entrained together.

10. The medical device according to claim 9 wherein said rod receiving means includes a body portion including a substantially U-shaped recess for receiving a rod member therein, said recess including an internally threaded portion including gripping means for gripping a threaded portion of a set screw in threaded engagement engaged therewith to prevent splaying of said engaged threads.

11. The medical device according to claim 9 wherein said device includes a set screw including said locking means, said set screw including a body portion having an outer surface, and a first thread disposed on said outer surface, said thread including gripping means for gripping a second thread into which said first thread is threadedly entrained to prevent splaying of said two engaged threads.

12. The medical device according to claim 9 wherein said rod receiving means includes a base portion and two arms extending therefrom defining a substantially U-shaped recess for receiving the portion of the rod member therein, each of said arms including a threaded inner surface including said gripping means, said locking means being threadedly received between mid arms, said gripping means preventing spreading apart of said arms from said locking means when said locking means is threadedly engaged within said arms.

13. A curvate screw thread.

14. The curvate screw thread according to claim 13, wherein said curvate thread is an external thread.

15. The curvate screw thread according to claim 14, wherein said curvate thread is a convex external thread.

16. The curvate screw thread according to claim 13, wherein said curvate thread is on a male part.

17. The curvate screw thread according to claim 13, wherein said curvate thread is on a female part.

18. An anti-splay device comprising:

a threaded body portion, at least a portion of said threaded body portion including a curvate thread.

19. A method of preventing splaying of two threadedly engaged components by gripping the engaged threads to each other.

20. An insert element comprising:

a body portion having an outer surface and a first thread disposed on said outer surface, said thread including gripping means for gripping a second thread into which said first thread is threadedly entrained to prevent splaying of said two engaged threads.

21. An external nut having a curvate screw thread.

* * * * *