US007862595B2

(12) **United States Patent**
Foley et al.

(10) **Patent No.: US 7,862,595 B2**
(45) **Date of Patent: *Jan. 4, 2011**

(54) **INSTRUMENTS AND METHODS FOR STABILIZATION OF BONY STRUCTURES**

(75) Inventors: **Kevin T. Foley**, Germantown, TN (US); **Michael C. Sherman**, Memphis, TN (US); **Jeff R. Justis**, Gulf Breeze, FL (US)

(73) Assignee: **Warsaw Orthopedic, Inc.**, Warsaw, IN (US)

(*) Notice: Subject to any disclaimer, the term of this patent is extended or adjusted under 35 U.S.C. 154(b) by 941 days.

This patent is subject to a terminal disclaimer.

(21) Appl. No.: **11/656,716**

(22) Filed: **Jan. 23, 2007**

(65) **Prior Publication Data**

US 2007/0185491 A1 Aug. 9, 2007

Related U.S. Application Data

(60) Division of application No. 10/126,237, filed on Apr. 19, 2002, now Pat. No. 7,188,626, which is a continuation-in-part of application No. 09/616,581, filed on Jul. 14, 2000, now Pat. No. 6,530,929.

(60) Provisional application No. 60/186,729, filed on Mar. 3, 2000, provisional application No. 60/160,489, filed on Oct. 20, 1999.

(51) **Int. Cl.**
A61B 17/70 (2006.01)
A61B 17/88 (2006.01)

(52) **U.S. Cl.** ..... **606/279**; 606/246; 606/86 A

(58) **Field of Classification Search** ..... 606/246, 606/261, 264–267, 270, 272, 278, 279, 301, 606/307, 308, 99, 102, 104, 86 A; 604/170.03; 403/2, 6–10, 13, 14, 19, 90, 122; 411/2, 411/3, 393

See application file for complete search history.

(56) **References Cited**

U.S. PATENT DOCUMENTS

2,338,159	A	1/1944	Appleton
2,372,866	A	4/1945	Tofflemire
2,697,433	A	12/1954	Zehnder
3,892,232	A	7/1975	Neufeld

(Continued)

FOREIGN PATENT DOCUMENTS

DE 19726754 A1 1/1997

(Continued)

OTHER PUBLICATIONS

Sofamor Danek; The Spine Specialist, TSRH Pedicle Screw Spinal System, Severe Spondylolisthesis of L5-S1 Grade 3 & 4; Surgical Technique as described by Edward H. Simmons, MD, Edward D. Simmons, Jr. MD, Howard D. Markowitz, MD Copyright 1997.

(Continued)

Primary Examiner—Eduardo C Robert
Assistant Examiner—David Comstock

(57) **ABSTRACT**

The present invention relates to methods and instruments for placing a brace or connecting element into an animal subject for engagement with anchors secured in the animal subject. The installation instrument includes anchor extensions coupled to the anchors. The instrument is movable with respect to the anchors to position the connecting element in a position more proximate the anchors.

20 Claims, 16 Drawing Sheets

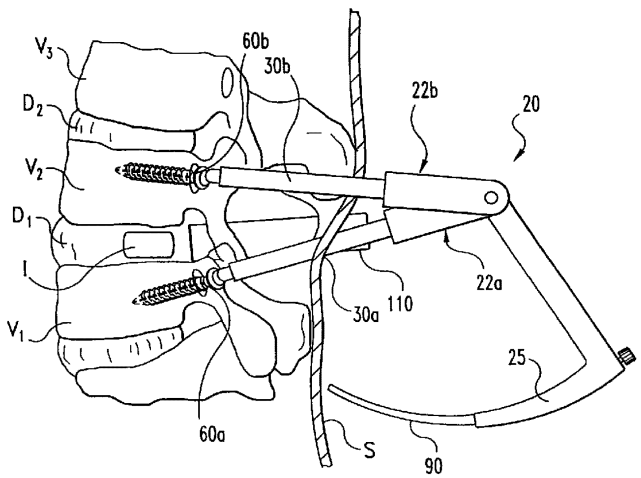

U.S. PATENT DOCUMENTS

4,335,715	A		6/1982	Kirkley
4,349,921	A		9/1982	Kuntz
4,409,968	A		10/1983	Drummond
4,448,191	A		5/1984	Rodnyansky et al.
4,501,269	A		2/1985	Bagby
4,545,374	A		10/1985	Jacobson
4,573,448	A		3/1986	Kambin
4,722,331	A		2/1988	Fox
4,743,256	A		5/1988	Brantigan
4,790,303	A		12/1988	Steffee
4,820,305	A		4/1989	Harms et al.
4,863,430	A		9/1989	Klyce et al.
4,863,476	A		9/1989	Shepperd
4,883,048	A		11/1989	Purnell et al.
4,896,661	A		1/1990	Bogert et al.
4,903,691	A		2/1990	Heinl
4,917,704	A		4/1990	Frey et al.
4,955,885	A		9/1990	Meyers
4,955,908	A		9/1990	Frey et al.
4,957,495	A		9/1990	Kluger
4,987,892	A	*	1/1991	Krag et al. 606/264
5,080,662	A		1/1992	Paul
5,092,866	A		3/1992	Beard et al.
5,116,344	A		5/1992	Sundqvist
5,163,940	A		11/1992	Bourque
5,171,279	A		12/1992	Mathews
5,196,013	A		3/1993	Harms et al.
5,242,443	A		9/1993	Kambin
5,242,444	A		9/1993	MacMillan
5,281,223	A		1/1994	Ray
5,314,429	A		5/1994	Goble
5,334,205	A		8/1994	Cain
5,342,361	A		8/1994	Yuan et al.
5,364,399	A		11/1994	Lowery et al.
5,383,454	A		1/1995	Bucholz
5,395,372	A		3/1995	Holt et al.
5,409,488	A		4/1995	Ulrich
5,437,667	A		8/1995	Papierski et al.
5,474,551	A		12/1995	Finn et al.
5,522,899	A		6/1996	Michelson
5,549,612	A		8/1996	Yapp et al.
5,568,319	A		10/1996	Kaneko et al.
5,569,248	A		10/1996	Mathews
5,591,165	A		1/1997	Jackson
5,591,167	A		1/1997	Laurain et al.
5,601,562	A		2/1997	Wolf et al.
5,613,968	A		3/1997	Lin
5,613,971	A		3/1997	Lower et al.
5,616,142	A		4/1997	Yuan et al.
5,616,143	A		4/1997	Schlapfer et al.
5,624,442	A		4/1997	Mellinger
5,643,273	A		7/1997	Clark
5,645,596	A		7/1997	Kim et al.
5,672,175	A		9/1997	Martin
5,672,176	A		9/1997	Biedermann et al.
5,681,319	A	*	10/1997	Biedermann et al. 606/104
5,681,320	A		10/1997	McGuire
5,683,392	A		11/1997	Richelsoph
5,704,937	A		1/1998	Martin
5,716,356	A		2/1998	Biedermann et al.
5,720,751	A		2/1998	Jackson
5,725,532	A		3/1998	Shoemaker
5,728,097	A		3/1998	Mathews
5,735,857	A		4/1998	Lane
5,741,266	A		4/1998	Moran et al.
5,752,962	A		5/1998	D'Urso
5,766,252	A		6/1998	Henry et al.
5,766,253	A		6/1998	Brosnahan
5,772,594	A		6/1998	Barrick
5,776,199	A		7/1998	Michelson
5,782,830	A		7/1998	Farris
5,792,044	A		8/1998	Foley et al.
5,797,911	A		8/1998	Sherman et al.
5,851,183	A		12/1998	Bucholz
5,871,445	A		2/1999	Bucholz
5,873,878	A		2/1999	Harms et al.
5,879,350	A		3/1999	Sherman et al.
5,888,224	A		3/1999	Beckers et al.
5,888,226	A		3/1999	Rogozinski
5,888,227	A		3/1999	Cottle
5,891,034	A		4/1999	Bucholz
5,891,150	A		4/1999	Chan
5,891,158	A		4/1999	Manwaring et al.
5,902,231	A		5/1999	Foley et al.
5,904,683	A		5/1999	Pohndorf et al.
RE36,221	E		6/1999	Breard et al.
5,910,141	A		6/1999	Morrison et al.
5,941,885	A		8/1999	Jackson
5,964,761	A		10/1999	Kambin
6,033,406	A		3/2000	Mathews
6,036,692	A		3/2000	Burel et al.
D425,989	S		5/2000	Michelson
6,080,158	A		6/2000	Lin
6,090,113	A		7/2000	Le Couedic et al.
6,093,207	A		7/2000	Pisharodi
6,099,528	A		8/2000	Saurat
6,123,705	A		9/2000	Michelson
6,123,707	A		9/2000	Wagner
6,139,549	A		10/2000	Keller
6,146,386	A		11/2000	Blackman et al.
6,149,688	A		11/2000	Brosnahan et al.
6,162,223	A		12/2000	Orsak et al.
6,179,873	B1		1/2001	Zientek
6,183,477	B1		2/2001	Pepper
6,210,412	B1		4/2001	Michelson
6,226,548	B1		5/2001	Foley et al.
6,235,028	B1		5/2001	Brumfield et al.
6,287,313	B1		9/2001	Sasso
6,302,914	B1		10/2001	Michelson
6,458,159	B1		10/2002	Thalgott
6,485,491	B1		11/2002	Farris et al.
6,530,926	B1		3/2003	Davison
6,530,929	B1		3/2003	Justis et al.
6,562,046	B2		5/2003	Sasso
6,575,899	B1		6/2003	Foley et al.
6,599,294	B2		7/2003	Fuss et al.
6,669,698	B1		12/2003	Tromanhauser et al.
6,793,656	B1		9/2004	Mathews
6,821,277	B2		11/2004	Teitelbaum
6,916,320	B2		7/2005	Michelson
7,008,422	B2	*	3/2006	Foley et al. 623/17.16
7,011,660	B2		3/2006	Sherman et al.
7,060,068	B2		6/2006	Tromanhauser et al.
7,063,725	B2		6/2006	Foley
7,066,961	B2		6/2006	Michelson
7,188,626	B2	*	3/2007	Foley et al. 128/898
7,320,688	B2		1/2008	Foley et al.
7,341,587	B2		3/2008	Molz, IV et al.
7,455,685	B2		11/2008	Justis
7,462,182	B2		12/2008	Lim
7,465,306	B2		12/2008	Pond, Jr. et al.
7,468,064	B2		12/2008	Bruneau et al.
7,473,267	B2		1/2009	Nguyen et al.
2002/0045904	A1		4/2002	Fuss et al.
2002/0087212	A1		7/2002	James et al.
2002/0120334	A1		8/2002	Crozet
2002/0161368	A1		10/2002	Foley et al.
2003/0060826	A1		3/2003	Foley et al.
2003/0208203	A1		11/2003	Lim et al.
2003/0229347	A1		12/2003	Sherman et al.
2005/0021031	A1		1/2005	Foley et al.
2005/0171540	A1		8/2005	Lim et al.
2006/0111714	A1	*	5/2006	Foley 606/61
2006/0149238	A1	*	7/2006	Sherman et al. 606/61

2006/0200135	A1*	9/2006	Sherman et al.	606/61
2006/0229614	A1	10/2006	Foley et al.	
2006/0247630	A1	11/2006	Lott et al.	
2006/0264942	A1	11/2006	Lim et al.	
2007/0049931	A1	3/2007	Justis et al.	
2007/0185491	A1	8/2007	Foley et al.	
2007/0191836	A1	8/2007	Justis	
2007/0198015	A1*	8/2007	Foley et al.	606/61
2007/0213714	A1	9/2007	Justis	
2008/0249531	A1	10/2008	Patterson	
2008/0319477	A1	12/2008	Justis et al.	

FOREIGN PATENT DOCUMENTS

DE	196 26 754	A1	1/1998
DE	100 27 988	A1	1/2002
EP	260044		3/1988
EP	0 528 562	A2	2/1993
EP	0528177		2/1993
EP	1099429		5/2001
EP	1201207		5/2002
FR	2736538		1/1997
SU	0839513	A	6/1981
WO	WO 97/30666		8/1997
WO	WO 97/38639		10/1997
WO	WO 99/15097		4/1999
WO	WO 99/26549		6/1999
WO	WO 00/44288		8/2000
WO	WO 01/28436		4/2001

OTHER PUBLICATIONS

Sofamor Danek, The Spine Specialist; Horizon Spinal System, Surgical Technique; as described by Samuel J. Laufer, MD, J. Andrew Bowe, MD, Copyright 1999.
Posterior Percutaneous Spine Instrumentation; 9 (Suppl 1) Eur Spine J (2000) Received: Sep. 3, 1999, Accepted: Sep. 4, 1999.
Synthes Spine, "Universal Spinal Systems (USS) Technique Guide", Jun. 1997.
Synthes Spine, "Cervical Spine Locking Plate System", Synthes 1995 Product Catalog, 1995.
Acromed, "AcroPlate—Anterior Cervical System", AcroMed 1994 Product Catalog, 1994.
Depuy, "Anterior Product Compression Catalog Plate", DePuy 1996 Product Catalog, 1996.
Callahan, J. et al., "Percutaneous Lumbar Discectomy: A New Adjunct Open Surgery" Indiana Medicine, 84(3), pp. 188-190, Mar. 1991.
Daniaux, H., et al. "Application of Posterior Plating and Modifications in Thoracolumbar Spine Injuries," Spine, 16 (Supp.3), pp. S127-S132, 1991.
De Oliveira, J.C. "Anterior Plate Fixation of Traumatic Lesions of the Lower Cervical Spine," Spine, 12(4), 1987.
Kambin, P. "Posterolateral Percutaneous Lumbar Discectomy and Decompression: Arthroscopic Microdiscectomy," Arthroscopic Microdiscectomy, Ch. 6, 1991.
Hijikata, S., "Percutaneous Nucleotomy, A new Concept Techniques and 12 Years' Experience," Clinical Orthopaedics and Related Research, 238, Jan. 1989.
Mathews, H.H., et al. Laparoscopic Discectomy with Anterior Lumbar Interbody Fusion, Spine 20(16), pp. 1797-1802, 1995.
Mathews, H.H. "Percutaneous Interbody Fusions," Orthopedic Clinics of North America, vol. 29, No. 4, Oct. 1998.
Moran, J.M., et al., "Transpedicular Screw Fixation," Journal Orthopaedic Research, vol. 7 pp. 107-114, 1989.
Schreiber, A., et al., "Does Percutaneous Nucleotomy With Discoscopy Replace Conventional Discectomy?" Clincial Orthopaedics and Related Research, No. 238, Jan. 1989.
Suezaway, Y. et al., "Percutaneous Nucleotomy An Alternative to Spinal Surgery," Archives of Orthopaedic and Traumatic Surgery, No. 105, pp. 287-295, 1986.
Zindrick, M.R., "The Role of Transpedicular Fixation Systems for Stablization of the Lumbar Spine," Orthopaedic Clinics of North America, vol. 22, No. 2, Apr. 1991.
Kambin, P., "Arthoscopic Fusion of the Lumbosacral Spine," Lumbosacral and Spinopelvic Fixation, 1996.
Schreiber, A., et al., "Percutaneous Nucleotomy: Technique with Discoscopy", Orthopedics, vol. 14, No. 4, Apr. 1991.
Harrington, P., "Treatment of Scoliosis: Correction and Internal Fixation by Spine Instrumentation", Journal of Bone and Joint Surgery Am, 44:591-634, 1962.
Gillespie, R., et al., "Harrington Instrumentation Without Fusion", Journal of Bone and Joint Surgery, 1981; 63-B(3), 461, 1981.
Patterson, J.F., et al., "The Operative Treatment of Progressive Early Onset Scoliosis: A Preliminary Report", Spine, 15(8), 809-815, 1990.
Vanlommel, E. et al., "Harrington Instrumentation Without Fusion for the Treatment of Scoliosis in Young Children", Journal of Pediatric Orthopaedics Part B, 1.116-8, 1992.
Tello, C.A., "Harrington Instrumentation Without Arthrodesis and Consecutive Distraction Program for Young Children with Severe Spinal Deformities: Experience and Technical Details", Orthopaedic Clinics of North America, 25 (2), 333-351, 1994.
Klemme, W.R. et al., "Spinal Instrumentation Without Fusion for Progressive Scoliosis in Young Children," Journal of Pediatric Orthopaedics, 17,734-42,1997.
Mineiro, J. et al., "Subcutaneous Rodding for Progressive Spinal Curvatures: Early Results", Journal of Pediatric Orthopaedics, 22, 290-5, 2002.
Moe et al., "Harrington Instrumentation Without Fusion Plus External Orthotic Support for the Treatment of Difficult Curvature Problems in Young Children", Clinical Orthopaedics and Related Research, 185, 35-45, 1984.
Globus Medical, "Pivot System", Minimally Invasive Products, Copyright 2005 Globus Medical, wwvv. globusmedical.com.
Aebi, M. et al., AO ASIF Principles in Spine Surgery, pp. 119-120, Dec. 23, 1997.
Synthes Spine, "The Universal Spinal System: Surgical Technique Guide for the Correction of Scoliosis", 1994.
Cunningham, B.W. et al., "Video-Assisted Thoracoscopic Surgery Versus Open Thoracotomy for Anterior Thoracic Spinal Fusion," Spine, 23(12), Jun. 1998.
Fedder, I.L. et al., "Video-Assisted Spinal Surgery: Laboratory Protoco!," in, Atlas of Endoscopic Spine Surgery, Regan, J.F., et al., Eds., Quality Medical Publishing, Inc.
Rosenthal, D. et al., "Newer Applications of Spinal Instrumentation," in, Atlas of Endoscopic Spine Surgery, Regan, J.F.et al., Eds., Quality Medical Publishing, Inc., St. Louis, pp. 333-337, 1995.
Avallone, Eugene A. et al., Marks' Standard Handbook for Mechanical Engineers, 10th Ed., p. 8-3,1996.
Phelan, RM., Fundamentals of Mechanical Design, 3rd Ed., pp. 6-7, 72, 1957.
Rothbart, H.A., CAMS Design, Dynamics, and Accuracy, p. 4, 1956.
Globus Medical, "Suslain-O—Radiolucent Space System", Globus Medical Copyright 2006, www,globusmedical com.
Globus Medical, "Pivot Minimally Stabilization System Surgical Technique", Globus Medical, (date unknown).
Perez-Cruet, M, J. et al., eds "An Anatomic Approach To Minimally Invasive Spinal Surgery", Ch. 33 (Quality D Medical Publishing), 2006.
Wang, M. Y. et al., "Minimally Invasive Posterior Lumbar Fusion Techniques", Elsevier, 2005.
Lippincott, Williams, & Wilkins, Stedman's Medical Dictionary, 27 Ed., "percutaneous", p. 1345, 2000.
Obray, R.W., "MR Imaging and and Osseous Spinal Intervention and Intervertebral Disk Intervention", Magnetic Resonance Imaging Clinics, Elsevier, 2007.
Rodts, G., "New Technology Advances Minimally Invasive Spine Surgery", Spine Universe, www,spineuniverse,com,' printed on Oct. 10, 2007.
Healthwise, "Percutaneous Disectomy for Herniated Disc", BC Health Guide, www.healthwise,org, printed Oct. 10, 2007.
Heini, Paul F. et al., "The Use of a Side-Opening Injection Cannula in Vertebroplasty", Spine, 27(1), 2002.
Skinner, Harry B, Ed., Current Diagnosis & Treatment in Orthopedics (2nd edition), p. 198, 2003.
Globus Medical, "Excellence in Spine" Brochure, (date unknown).

Ditsworth, D., "Comprehensive Percutaneous Endoscopic Spinal Surgery" AANS 1995 Annual Meeting, Abstract, Apr. 1995.
Globus Medical, "Global Medical Launches Sustain 0", Press Release, wvwv.globusmedical.com, Aug. 10, 2006.
Bohlman, H.H. et al., "Spinal Cord Monitoring of Experimental Incomplete Cervical Spinal Cord Injury", Spine, vol. 6, No. 5, Sep./Oct. 1981.
Regan. J. et al., "Endoscopic Techniques in Spinal Surgery", Clinical Orthopaedics and Related Research, No. 335, pp. 122-139, Feb. 1997.
Maciejczak et al., "Posterior Keyhole Corpectomy with Percutaneous Pedicle Screw Stabilization in the Surgical Management of Lumbar Burst Fractures". Operative Neurosurgery 2, vol. 60, Apr. 2007.
Aunqble et al., "Video-assisted AUF with Cage and Anterior Plate Fixation for L5-S1 Spondylolisthesis", J. of Spinal Discord Tech., vol. 19. No. 7, Oct. 2006.
Sahin et al., "Minimally Incisional Stabilization of Unstable L5 Burst Fracture", J of Spinal Discord Tech, vol. 18, No. 5, Oct. 2005.
NEWSRX. "Transforminal Lumbar Interbody Fusion with Minimal Access Study Released", May 30, 2005.
Wang et ai "Minimally Invasive Posterior Lumbar Fusion Techniques." Operative Techniques in Neurosurgery, Elsevier, 2005.
MEDSTAR.COM, "Sextant Spinal Surgery", www.News14.com. Mar. 11, 2004.
Medical Industry Week, "Medtronic Introduces New Technique for Minimally-Invasive Spinal Surgery", Medtronic, Oct. 22, 2003.
Acosta et ai, "Use of Intraoperative Isocentric C-arm 3D Fluoroscopy for Sextant Percutaneous Pedicle Screw Placement: Case Report and Review of the Literature", The Spine Jou.
Beringer et al., "Unilateral Pedicle Screw Instrumentation for Minimally Invasice Transformational Lumbar Interbody Fusion", Neurosurg Focus 20, (3):E4, 2006.
Rodts, G., "Percutaneous Lumbar Pedicle Screws: Indications, Technique, Results", Haio et ai, eds, Advances in Spinal Stabilization, Prog, Neurol Surg., Basel, Karger, 2003, vol. 16, pp. 204-212.
Khoo et ai, "Minimally Invasive Percutaneous Posterior Lumbar Interbody Fusion", Neurosurgery, vol. 51, Supplement 2, Nov. 2002.
Neurological Surgery, "Reid Introduces New Spine Surgery to the Region", www.tnbrainandspine.com. Oct. 19, 2005.
Manning, A., "No Pain, All Gain" Tennessee Alumnus Magazine, vol. 86, No. 1, Winter, 2006.
Bindal et al., "Intraoperative Electromyography Monitoring in Minimally Invasice Transforminal Lumbar Interbody Fusion", J. Neurosurg. Spine, vol. 6, pp. 126-132, 2007.
Sells, T., "Finalists Named for Annual Health Care Heroes." Memphis Business Journal, Jul. 27, 2007.
Powers, et ai, "Placement of Percutaneous Pedicle Screws without Imaging Guidance", Neurosurg. Focus 20(3):E3, Mar. 2006.
Mummaneni et al., "The Mini-Open Transforminal Lumbar Interbody Fusion", Operative Neurosurgery 4, vol. 57, Oct. 2005.
Schwender et al., "Minimally Invasive Transforminal Lumbar Interbody Fusion (TUF)", J, Spinal Discord Tech, vol. 18, Supplement 1, Feb. 2005.
German et al., "Minimal Access Surgical Techniques in the Management of Painful Lumbar Motion Segment", Spine, vol. 30, No. 165, pp. 552-559, 2005.
Foley et al., "Minimally Invasive Lumbar Fusion", Spine, vol. 28, No. 155, pp. 526-535, 2003.
Park et al., "Percutaneous Pedicle Screw Fixation of the Lumbar Spine", Orthopaedic Surgery Spine, European Musculoskeletal Review 2002.
Mayer, "Memphis Neurosurgeon's Capstone Implant Providing Hope for Patients", Memphis Medical News, Copyright 2007.
Childers, "New Device May Be Able to Rebuild Spine: Video Mary Ann Childers reports", Chicago, CBS-2, May 30, 2005, www.cbs2chicago.com.
Cloward, "Acute Cervical Spine Injuries", Clinical Symposia, vol. 32, No. 1,1980.
Assaker, "Minimal Access Spinal Technologies: State-of-the-art, Indications, and Technologies", Joint Bone Spine, 71, pp. 459-469, 2004.
Criscitiello et al., "Principles of Endoscopic Techniques to the Thoracic and Lumbar Spine", Chapter 15, pp. 153-158, (date unknown).
McAfee et al., "Anterior Thoracic Corpectomy for Spinal Cord Decompression Performed Endoscopically", Surgical Laparoscopy and Endoscopy, vol. 5, No. 5, pp. 339-348, 1995.
McAfee et al., "The Incidence of Complications in Endoscopic Anterior Thoracolumbar Spinal Reconstructive Surgery", Spine, vol. 20, No. 14, pp. 1624-1632, 1995.
Zucherman et al., "Instrumented Laparoscopic Spinal Fusion: Preliminary Results", Spine, vol. 20, No. 18, pp. 2029-2035, 1995.
Mahvi et al., "A Prospective Study of Laparoscopic Spinal Fusion", Annals of Surgery, vol. 224, No. 1, pp. 85-90, 1996.
Buhren et al., "Minimal-Invasive ventrale Spondylodesen bei Verletzungen der Brust-und lendenwirbelsaule 35 (Minimally Invasive Ventral Spondylodesis for Injuries of the Thoraric and Lumbar Spine)", Der Chirurg, 68, pp. 1076-1084, 1997.
Reexamination Ctrl. No. 90/009,272—Response to Office Action Dated Oct. 20, 2009, including Exhibit B., Declaration of Scott G. Tromanhauser, M.D., M.B.A. dated Oct. 16, 2009.
Reexamination Ctrl. No. 90/009,273—Resp. To Office Action dated Nov. 3, 2009, including Ex. A., Interrogs. to the Jury for the 6,530,929 and 7,008,422 Patents, Ex. B., Memorandum and Order dated Mar. 18, 2008, and Ex. C., Decl. Of Scott G. Tromanhauser, M.D., M.B.A. dated Nov. 1, 2009.
Reexamination Ctrl. No. 90/009,277—Response to Office Action dated Nov. 16, 2009, including Exhibit A., Declaration of Scott G. Tromanhauser, M.D., M.B.A. dated Nov. 14, 2009.

* cited by examiner

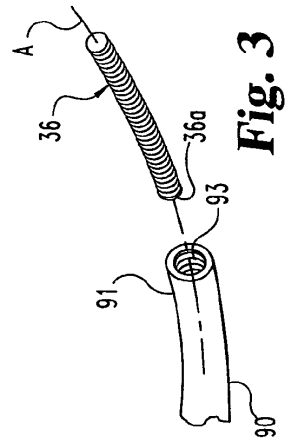
A
36
36a
93
91
90

Fig. 3

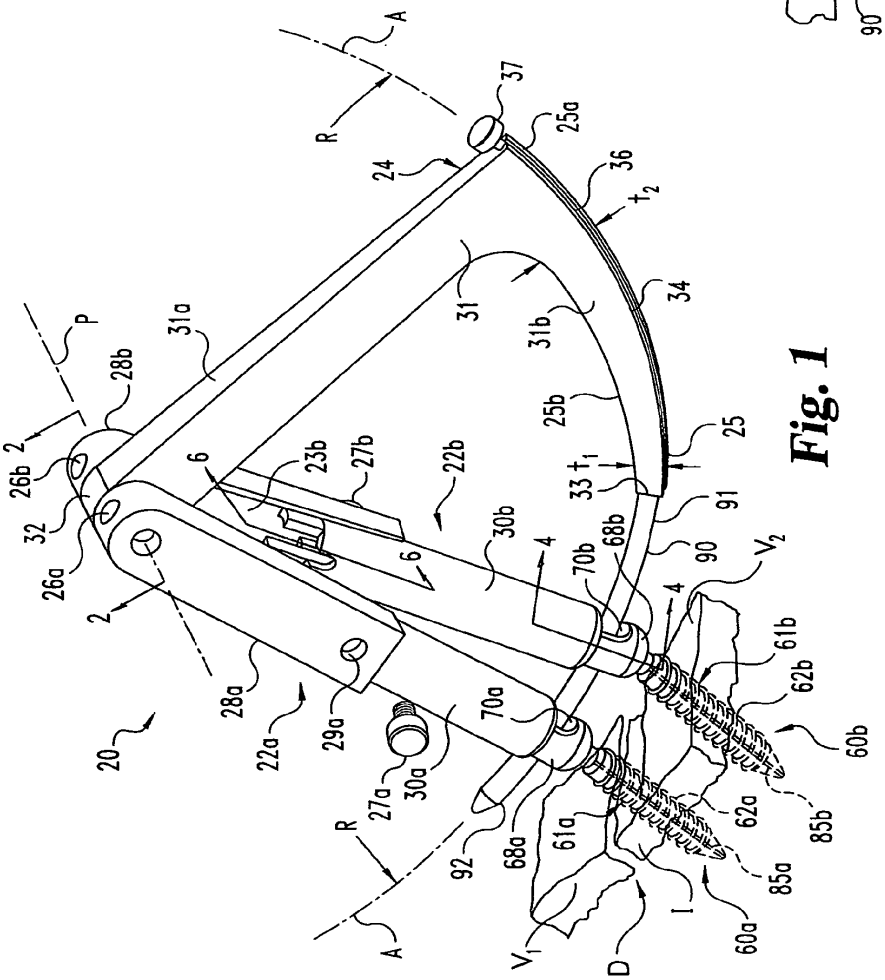
A
R
37
25a
24
36
t_2
34
31
31b
31a
P
28b
2
26b
32
26a
6
23b
27b
22b
25b
25
33
t_1
91
90
30b
4
70b
68b
V_2
61b
62b
60b
85b
62a
85a
60a
I
D
V_1
61a
68a
92
70a
30a
27a
29a
22a
28a
20

Fig. 1

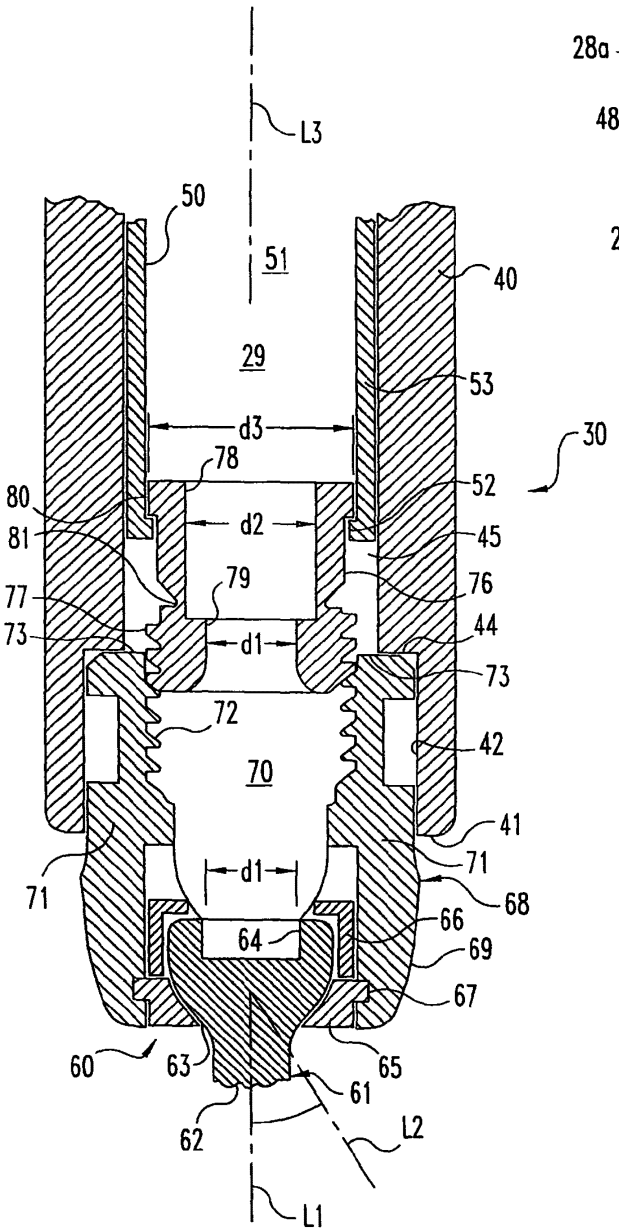

Fig. 4

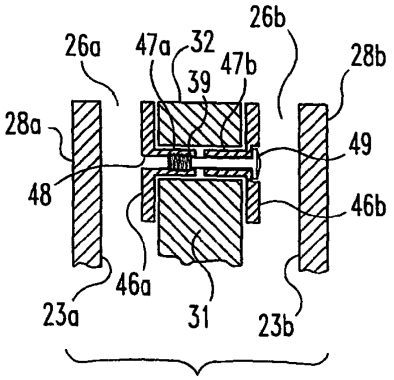

Fig. 2

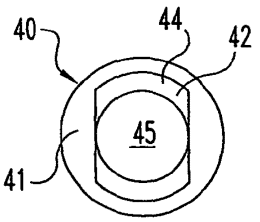

Fig. 5

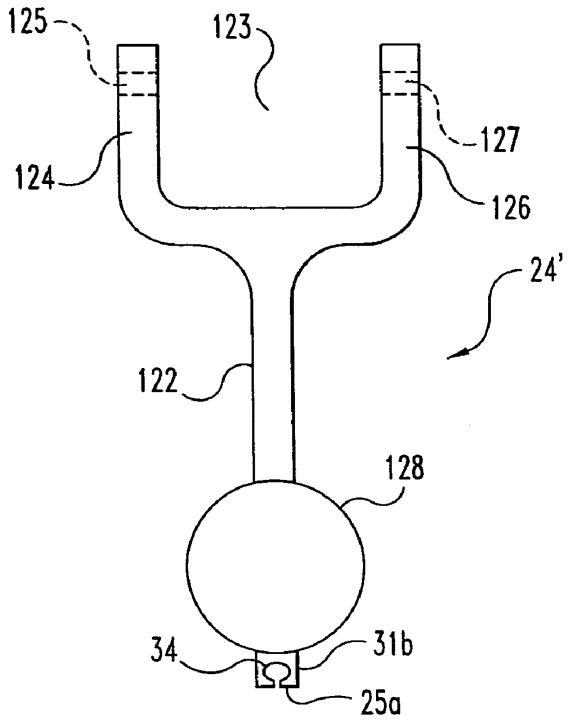
125
123
127
124
126
24'
122
128
34
31b
25a

Fig. 2A

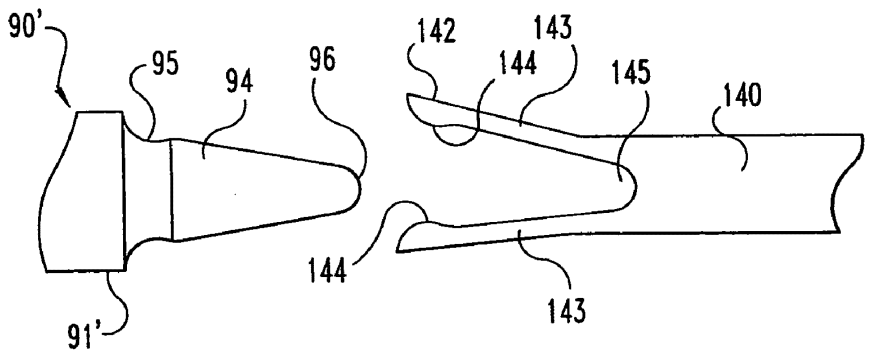
90'
95
94
96
142
143
144
145
140
144
143
91'

Fig. 3A

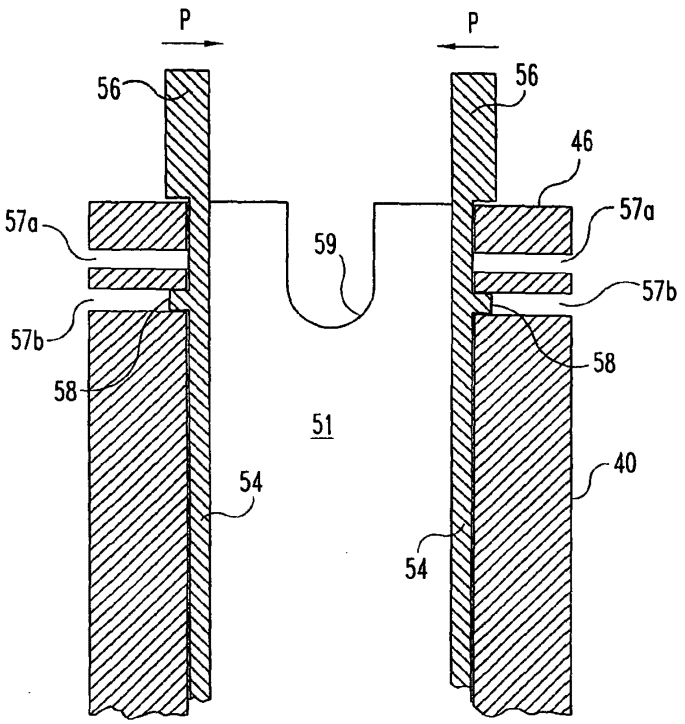
P
P
56
56
46
57a
57a
59
57b
57b
58
58
51
54
40
54

Fig. 6

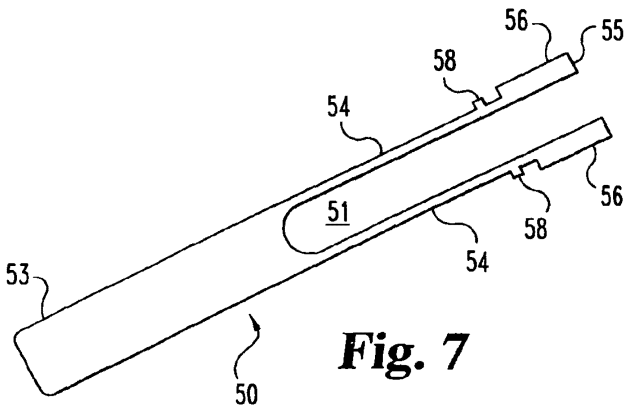
56
55
58
54
51
56
58
54
53
50

Fig. 7

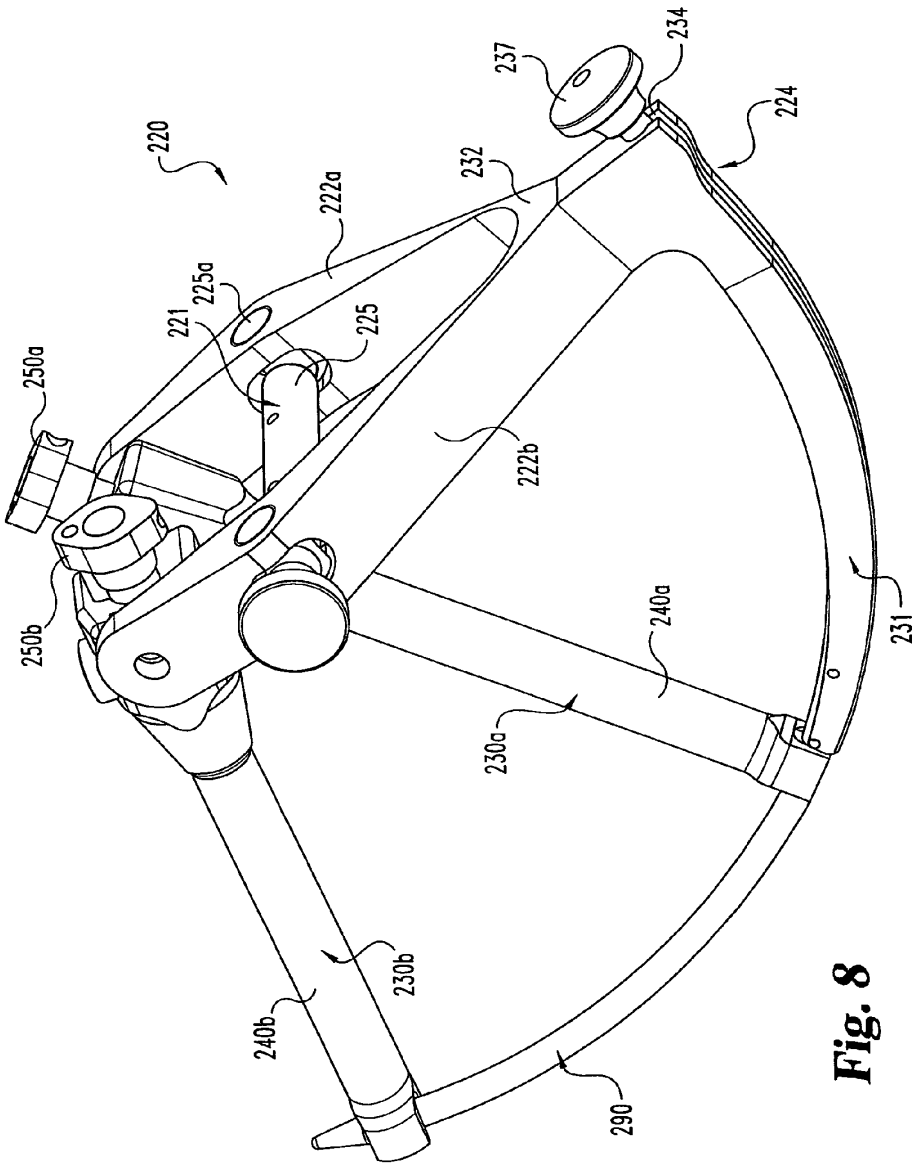
220
222a
225a
221
225
250a
250b
232
237
234
224
222b
240a
230a
231
230b
240b
290

Fig. 8

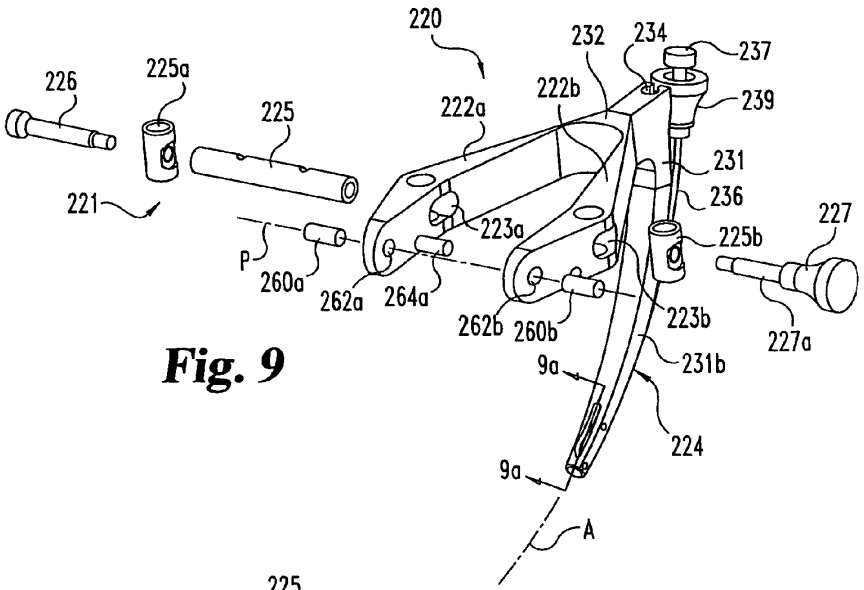

Fig. 9

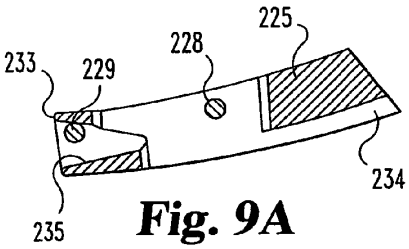

Fig. 9A

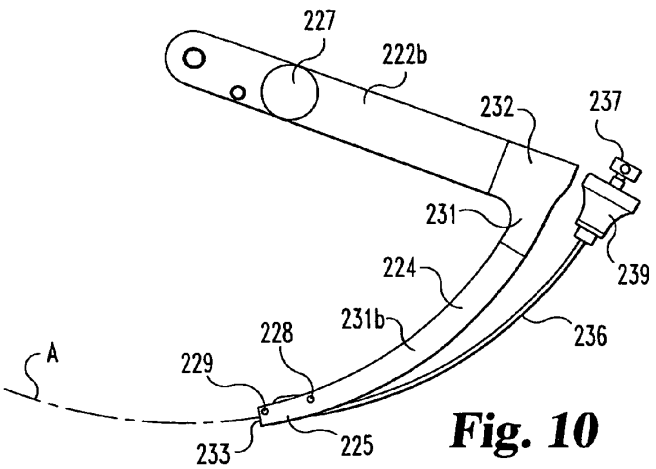

Fig. 10

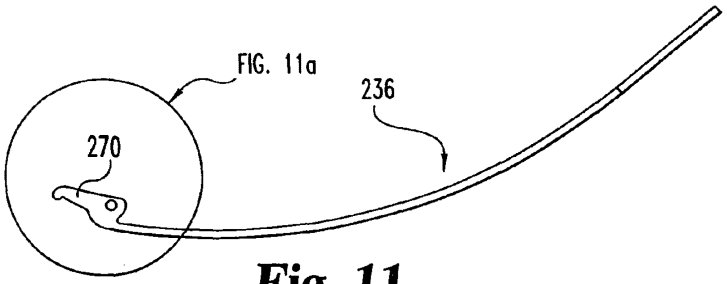

Fig. 11

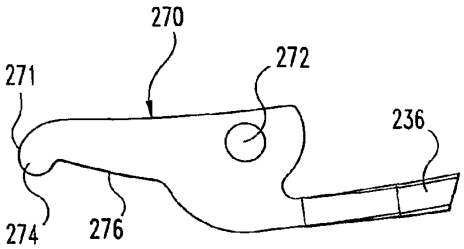

Fig. 11A

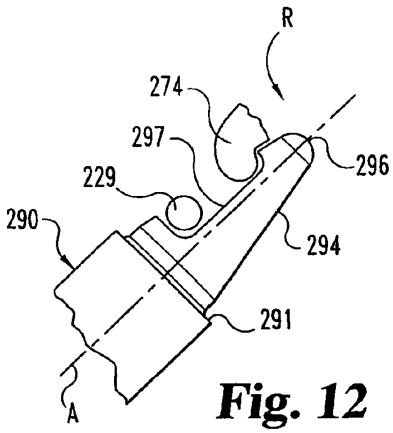

Fig. 12

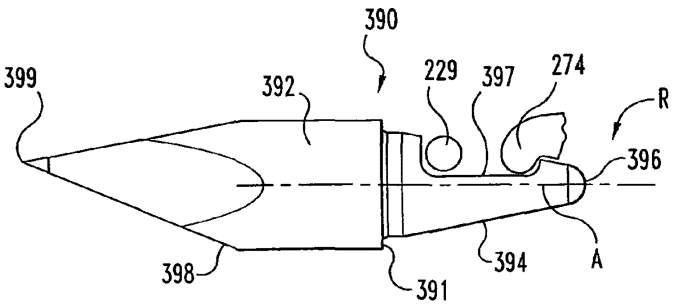

Fig. 13

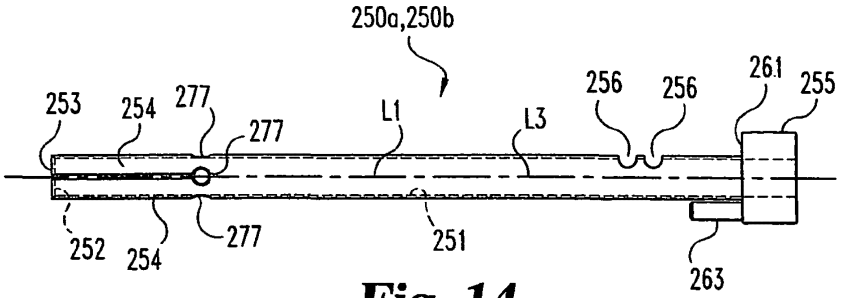

Fig. 14

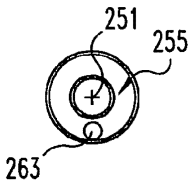

Fig. 15

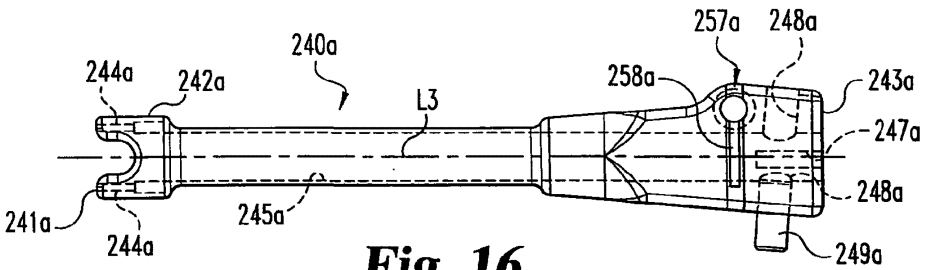

Fig. 16

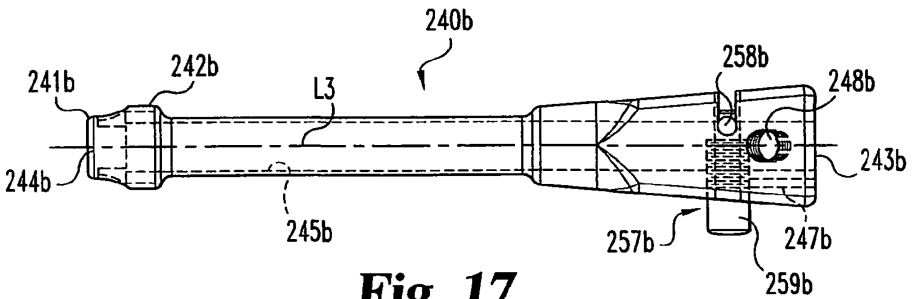

Fig. 17

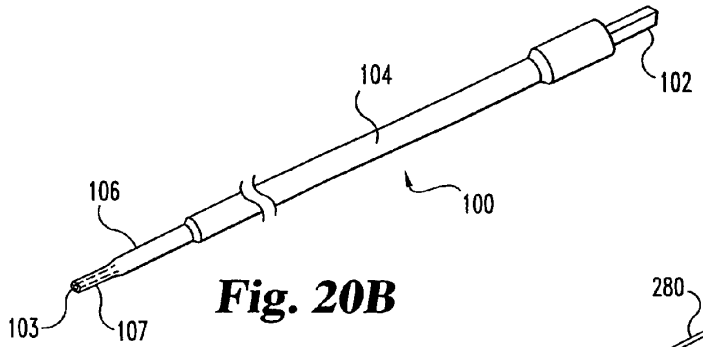

Fig. 20B

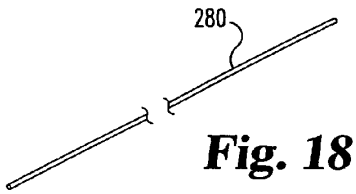

Fig. 18

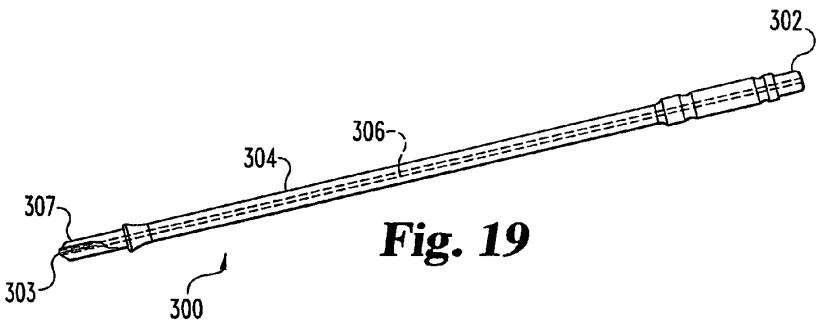

Fig. 19

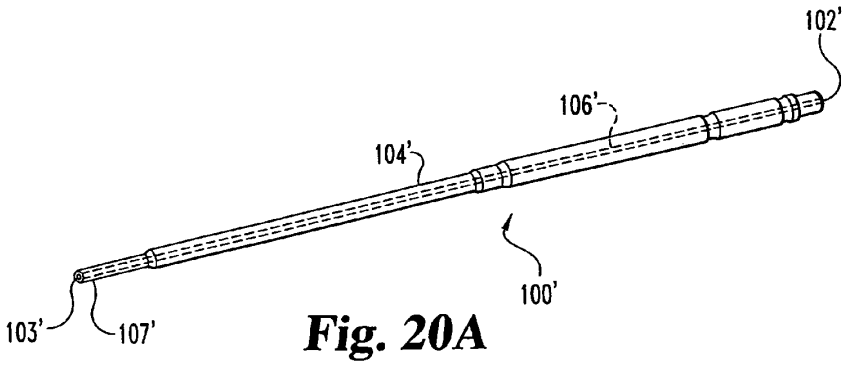

Fig. 20A

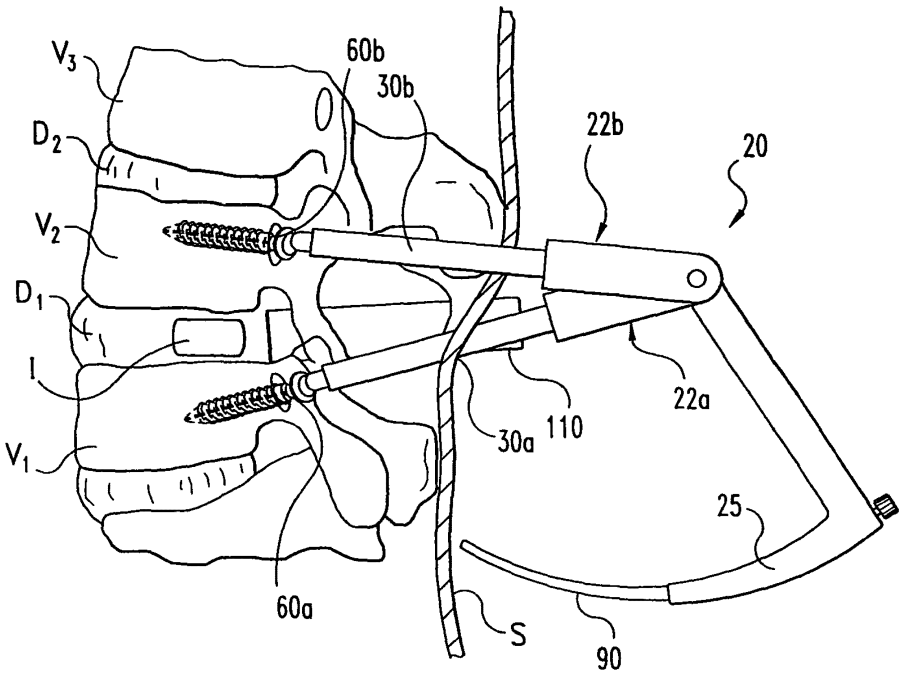
V3
60b
30b
22b
20
D2
V2
D1
I
22a
110
30a
V1
25
60a
S
90

Fig. 21

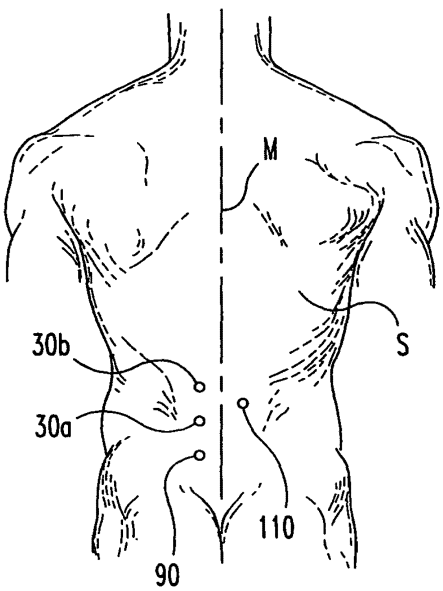
M
S
30b
30a
110
90

Fig. 22

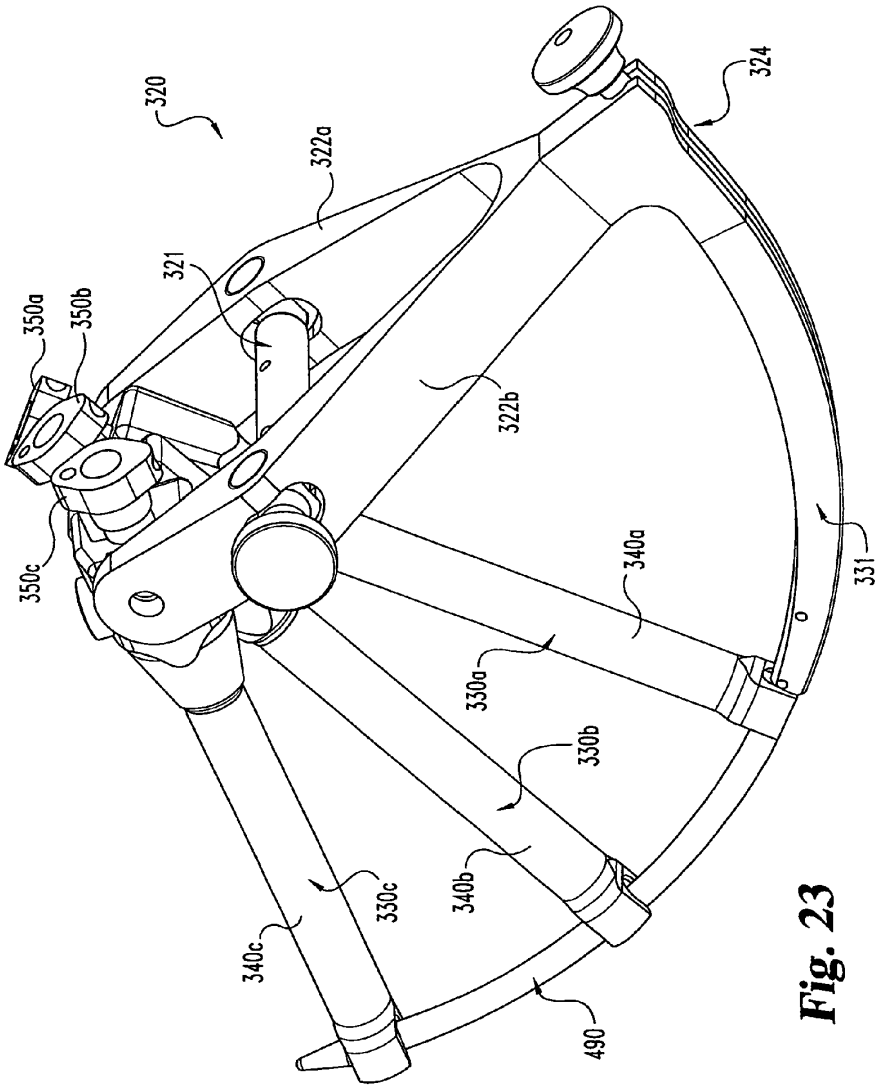
320
322a
321
350a
350b
350c
322b
324
331
340a
330a
330b
340b
330c
340c
490

Fig. 23

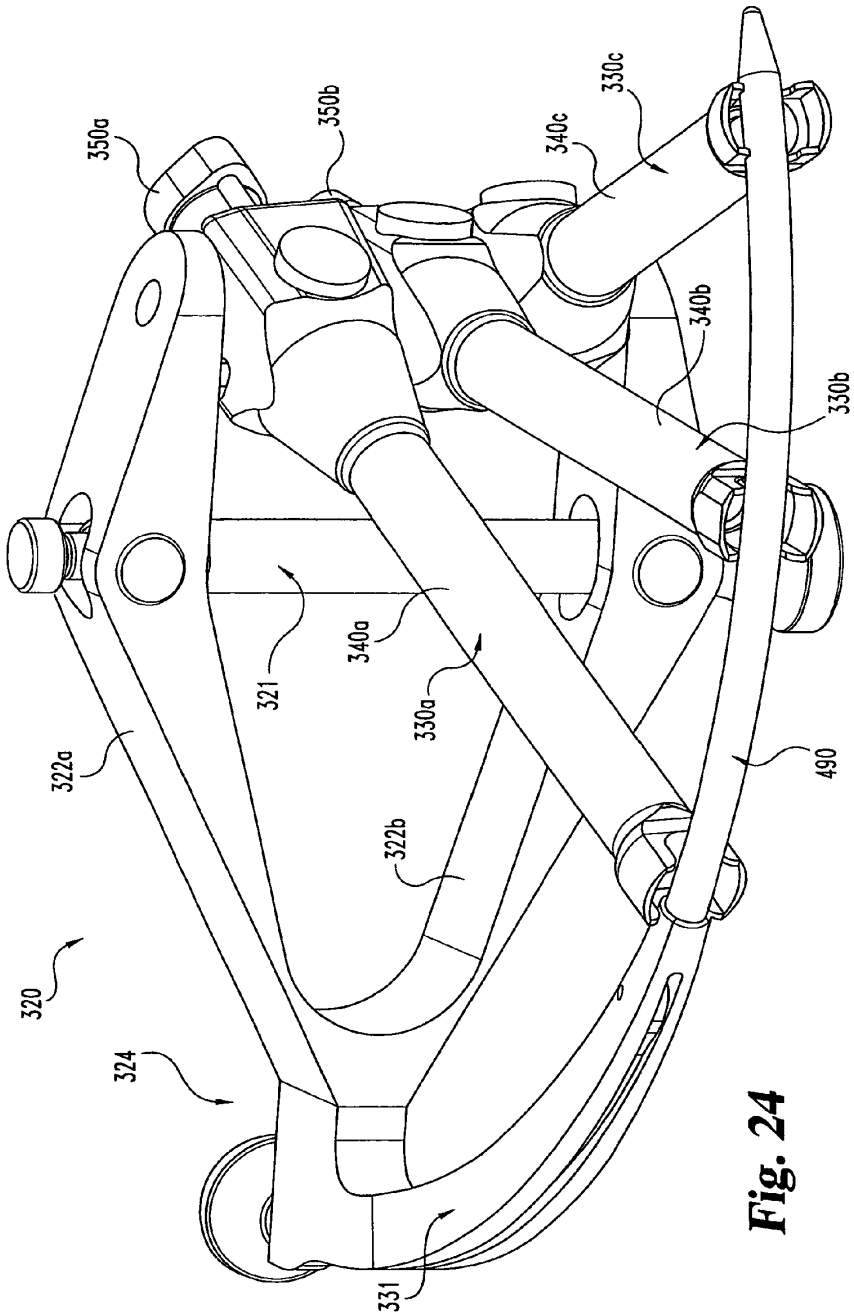
350a
350b
330c
340c
340b
330b
321
340a
330a
322a
322b
490
320
324
331

Fig. 24

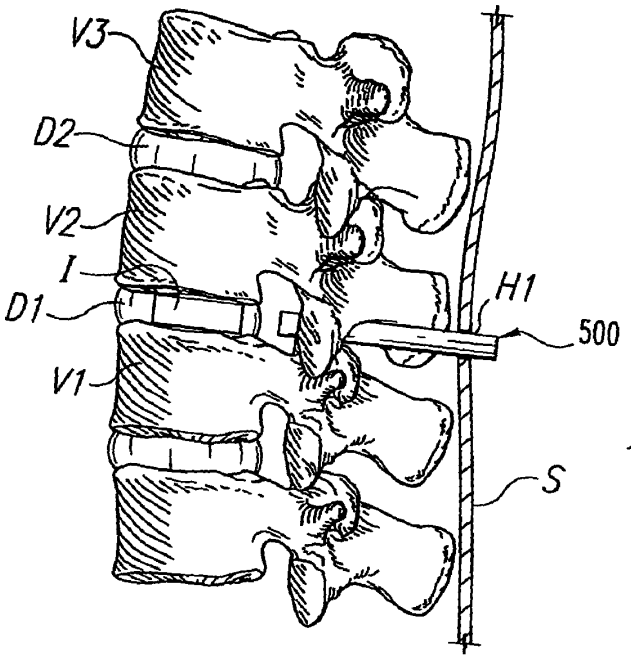

Fig. 25A

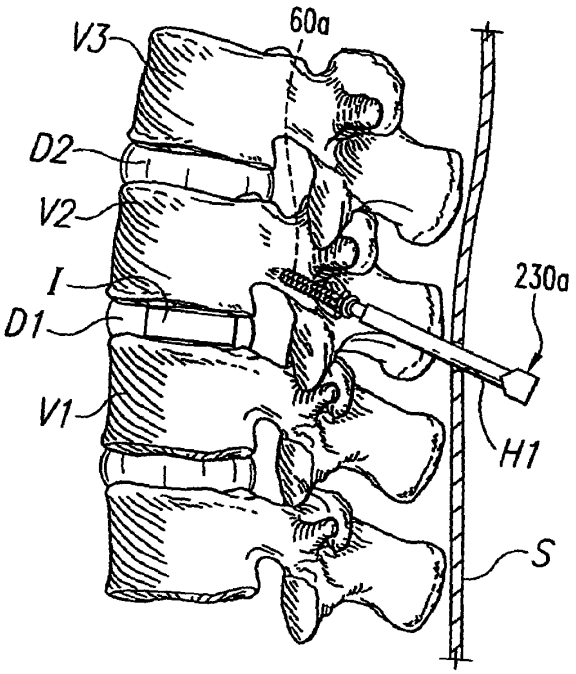

Fig. 25B

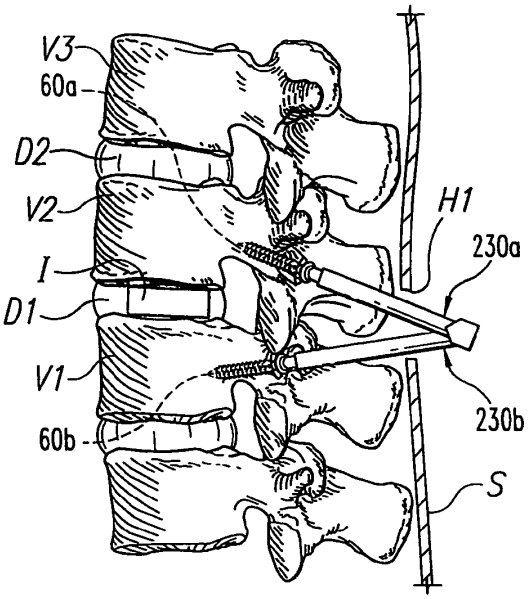

Fig. 25C

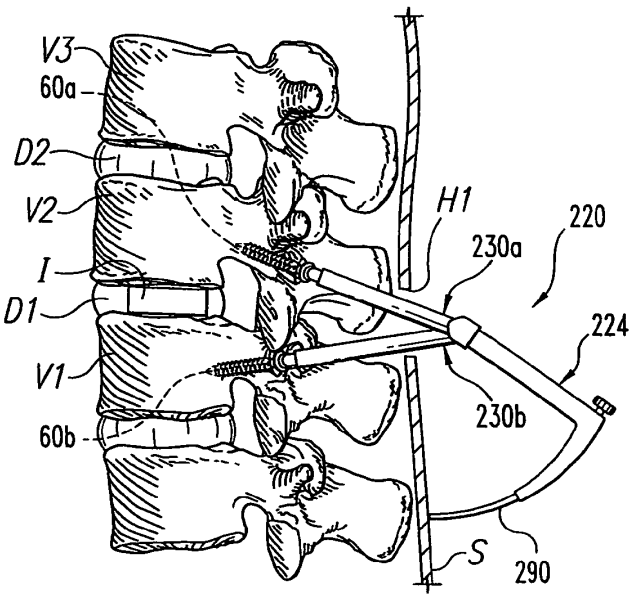

Fig. 25D

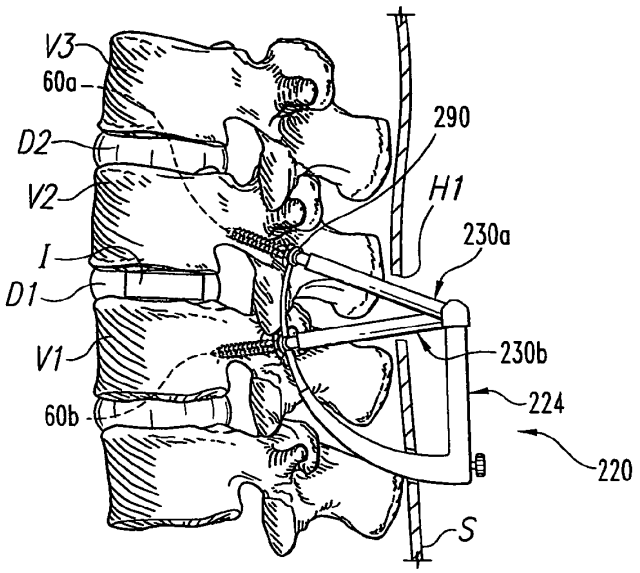

Fig. 25E

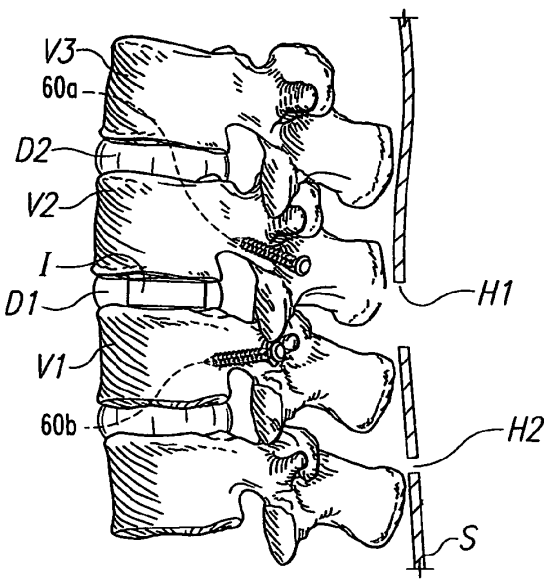

Fig. 25F

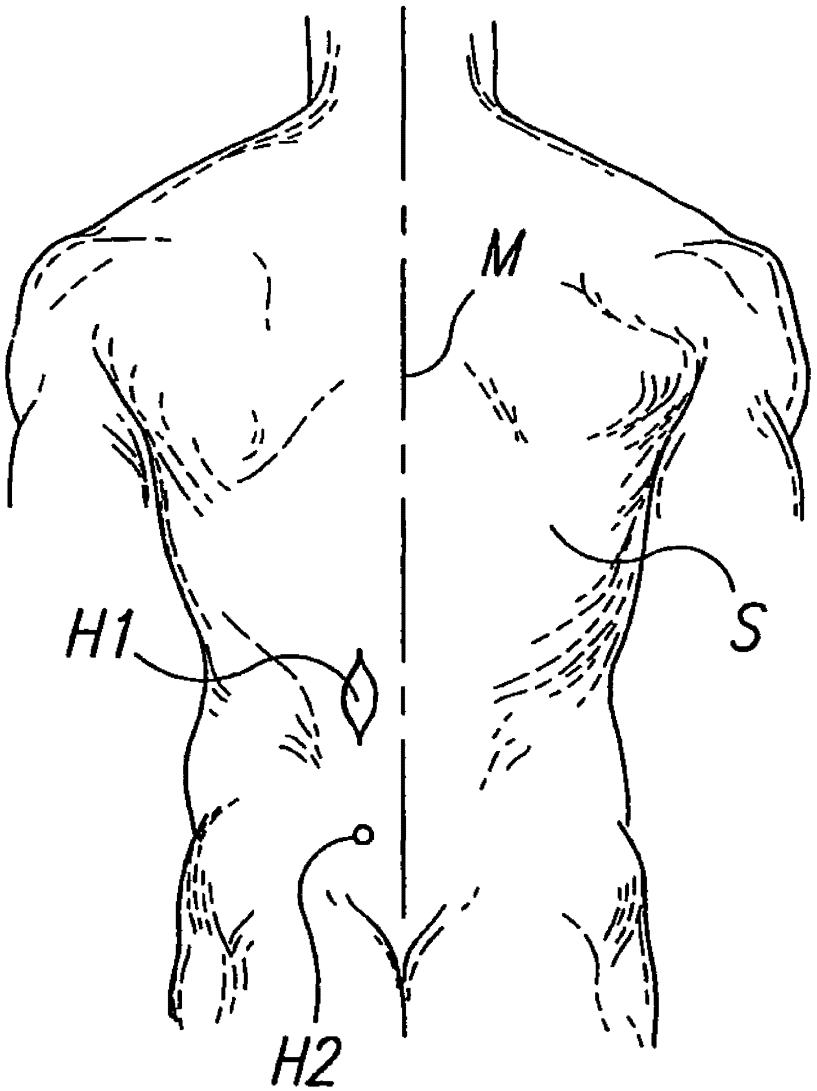

Fig. 25G

INSTRUMENTS AND METHODS FOR STABILIZATION OF BONY STRUCTURES

CROSS-REFERENCE TO RELATED APPLICATIONS

The present application is a divisional of U.S. patent application Ser. No. 10/126,237 filed on Apr. 19, 2002, now U.S. Pat. No. 7,188,626, which is a continuation-in-part of U.S. patent application Ser. No. 09/616,581 filed on Jul. 14, 2000, now issued as U.S. Pat. No. 6,530,929, which claims the benefit of the filing dates of Provisional Application Ser. No. 60/186,729, filed Mar. 3, 2000 and Provisional Application Ser. No. 60/160,489, filed Oct. 20, 1999. The referenced applications are each incorporated herein by reference in their entirety.

BACKGROUND

The present invention generally relates to surgical instruments and methods for use of the same, and more particularly, but not exclusively, relates to instruments and methods for stabilizing bony structures.

The use of various devices and methods for stabilizing bone structures have been used for many years. For example, the fracture of an elongated bone, such as a femur or humerus, can be stabilized by securing a plate to the fractured bone across the fracture. The plate extends across the fractured area and thus stabilizes the fractured components of the bones relative to one another in a desired position. When the fracture heals, the plate can be removed or left in place, depending on the type of plate that is used.

Another type of stabilization technique uses one or more elongated rods extending between components of a bony structure and secured to the bony structure to stabilize the components relative to one another. The components of the bony structure are exposed and one or more bone engaging fasteners are placed into each component. The elongated rod is then secured to the bone engaging fasteners in order to stabilize the components of the bony structure.

One problem associated with the above described stabilization structures is that the skin and tissue surrounding the surgical site must be cut, removed, and/or repositioned in order for the surgeon to access the location where the stabilization device is to be installed. This repositioning of tissue causes trauma, damage, and scarring to the tissue. There are also risks that the tissue will become infected and that a long recovery time will be required after surgery for the tissue to heal.

Minimally invasive surgical techniques are particularly desirable in, for example, spinal and neurosurgical applications because of the need for access to locations deep within the body and the danger of damage to vital intervening tissues. The development of percutaneous minimally invasive spinal procedures has yielded a major improvement in reducing recovery time and post-operative pain because they require minimal, if any, muscle dissection and can be performed under local anesthesia. These benefits of minimally invasive techniques have also found application in surgeries for other locations in the body where it is desirable to minimize tissue disruption.

Examples of instruments and techniques for performing surgeries using minimally invasive techniques are found in U.S. Pat. Nos. 5,792,044 and 5,902,231 to Foley et al. While these techniques are steps in the right direction, there remains a need for instruments and methods for stabilizing bony structures using minimally invasive techniques. This need and others are addressed by the present invention.

SUMMARY

The present invention relates to devices and methods for insertion of an orthopedic brace or connecting element to one or more anchors secured to an animal subject.

In one aspect of the invention, there is provided a method for using an instrument to connect at least two bone anchors with a connecting element. The instrument is secured to one or both the anchors and manipulated to place the connecting element in a position more proximate at least one of the anchors.

In another aspect of the present invention, there is provided a method that includes: placing at least two anchors in a bony structure, each of the anchors having an extension associated therewith; attaching a brace inserter of an installation instrument to the extensions; and guiding a brace into a desired position relative to the anchors.

In a further aspect of the invention, there is provided an instrument for placing a brace or connecting element into a desired position relative to at least two anchors. The instrument employs a fixed geometric relationship to guide the connecting element into a position proximate the anchors.

In yet a further aspect of the invention, there is provided an instrument for placing a connecting element into a desired position proximate the location of two anchors. The instrument is mounted to the at least two anchors and holds the connecting element in spatial relation to the anchors about a pivot point. The instrument is rotated about the pivot point to guide the connecting element to the desired position.

According to an additional aspect of the invention, there is provided an installation instrument having a brace secured thereto. The brace is indexed so that the brace can assume only a desired orientation when secured to the installation instrument.

According to one aspect of the invention, the percutaneous brace placement device includes first and second anchor extensions and a pivoting brace inserter mounted to the anchor extensions about a pivot axis. The pivoting brace inserter includes an arm having a brace mounting portion at its distal end for connecting an orthopedic brace to the device.

In another aspect of the present invention, the installation instrument includes a support arm engaged to the anchor extension. An anchor is engaged to the distal end of each anchor extension. Preferably, the anchors are in the form of a multi-axial screw capable of allowing universal rotation of the anchor extension. In one form, the arm is located at a predetermined radius from the pivot axis and in a curve at a substantially constant radius relative to the pivot axis to the brace mounting portion. In yet another form, a brace gripper or coupler is operable to selectively grip and release an orthopedic brace from the inserter. In another form, a brace has one end connected at the brace mounting portion and an opposite end adapted to puncture soft tissue of an animal body. Preferably, the brace and pivot arm lie in a circle centered on the pivot axis at a constant radius. The brace is curved at the constant radius relative to the pivot axis in one plane, and the brace is oriented to lie in the circle.

According to another aspect of the invention, a method of installing an orthopedic brace in an animal subject is provided. The method comprises placing first and second anchors mounted on first and second anchor extensions, respectively, percutaneously in first and second bony parts of the body of the subject; mounting a brace inserter on the anchor extensions, the inserter having a pivot axis about the

anchor extensions; mounting the brace on the pivoting brace inserter; and swinging the brace inserter relative to the anchor extensions about the pivot axis and thereby moving the brace in a forward direction through an arc centered on the pivot axis and introducing an end of the brace percutaneously to the location of the anchors. In a further form, the brace is fixed to the anchors; the inserter disconnected from the brace; and the inserter moved in a reverse direction through the arc and to remove the inserter from the body. Preferably, the brace is a shaft curved at a single radius about an axis co-linear with the pivot axis of the arc, and the method further includes introducing the shaft through receivers in the anchors during the introduction step.

In yet another aspect of the present invention, anchors, or anchors and anchor extensions are placed by image guided navigation to locate optimum placement and orientation of the anchors in pedicles of vertebral bodies of a single level of the spine of the animal. The image guided technology is also used to determine animal skin locations for percutaneous puncture entry of the anchors. In one form the anchors are cannulated and inserted over guidewires anchored in the vertebral bodies.

According to another aspect of the invention, a technique for spinal fusion of adjacent vertebral bodies of the animal spine is provided. The method includes removal of intervertebral disc material from the space between first and second vertebral bodies of the subject. One or more interbody fusion devices are introduced into the space. First and second anchors are engaged to the first and second vertebral bodies, respectively, through first and second percutaneous punctures in the subject. A curved brace is installed through a third percutaneous puncture in the subject using an installation instrument. The brace is connected to the anchors by application of fastening tool to the anchors through the first and second punctures.

In another form of the present invention, a curved brace is installed by swinging the brace through an arc in a plane containing the brace and perpendicular to the axis of curvature of the brace, and passing portions of the brace into passageways in the anchors. The pivot axis of the brace is at a fixed distance from the passageways equal to the radius of curvature of the brace.

Techniques for minimally invasive surgery are provided in which first and second anchors are inserted through a single incision and engaged to respective ones of first and second vertebrae. A connecting element is positioned proximate the first and second anchors from an entry location into the patient remote from the incision.

One object of the present invention of the present invention is to provide minimally invasive techniques and instruments for stabilizing a bony structure in an animal subject.

Related features, aspects, embodiments, objects and advantages of the present invention will be apparent from the following description.

BRIEF DESCRIPTION OF THE DRAWINGS

FIG. **1** is a perspective view of a brace and an installation instrument for installing the brace according to one embodiment of the present invention.

FIG. **2** is an enlarged fragmentary section view taken at line **2-2** of FIG. **1** and viewed in the direction of the arrows.

FIG. **2***a* is a side elevational view of another embodiment of a brace inserter.

FIG. **3** is an enlarged fragmentary exploded view of the connection of the brace to a portion of the installation instrument.

FIG. **3***a* is an enlarged fragmentary exploded view of another embodiment connection of the brace to a portion of the installation instrument.

FIG. **4** is an enlarged section view of a portion of the installation instrument taken at line **4-4** of FIG. **1**.

FIG. **5** is an end view, on a smaller scale than FIG. **4**, of an outer sleeve comprising a portion of the installation instrument of FIG. **1**.

FIG. **6** is an enlarged section view of a portion of the installation instrument taken through line **6-6** of FIG. **1**.

FIG. **7** is a perspective view on a much smaller scale than FIGS. **4** and **6** of an inner sleeve comprising a portion of the installation instrument of FIG. **1**.

FIG. **8** is a perspective view of a further embodiment of a brave and an installation instrument according to the present invention.

FIG. **9** is an exploded perspective view of a portion of the installation instrument of FIG. **8**.

FIG. **10** is a side elevational view of the portion of the installation instrument of FIG. **9**.

FIG. **11** is a side elevational view of the brace coupler of the installation instrument of FIG. **8**.

FIG. **11***a* is an enlarged detail view of a portion of the brace gripper of FIG. **10**.

FIG. **12** is an enlarged detail view of the portion of installation instrument connected to an indexed brace.

FIG. **13** is an enlarged view of a trocar and the portion of the installation instrument connected thereto.

FIG. **14** is an elevational view of an inner sleeve forming a portion of the anchor extension of the installation instrument of FIG. **8**.

FIG. **15** is a right hand end view of the inner sleeve of FIG. **14**.

FIG. **16** is a side elevational view of a first outer sleeve forming a portion of the anchor extension of the installation instrument of FIG. **8**.

FIG. **17** is a side elevational view of a second outer sleeve forming a portion of the anchor extension of the installation instrument of FIG. **8** rotated 90 degrees about its longitudinal axis as compared with the first outer sleeve of FIG. **16**.

FIG. **18** is a perspective view of a guidewire.

FIG. **19** is a perspective view of a cannulated awl usable in a surgical technique with the installation instrument of the present invention.

FIGS. **20***a* and **20***b* are perspective views of driver tools usable in a surgical technique with the installation instrument of the present invention.

FIG. **21** is a side elevational view of a portion of the spinal column and the installation instrument along with a cannula for performing surgical procedures in the disc space.

FIG. **22** is a top plan view of the instruments of FIG. **21** at the skin level.

FIGS. **23** and **24** are perspective views of another embodiment of an installation instrument of the present invention usable in a two level stabilization procedure.

FIGS. **25***a*-**25***g* illustrate various steps of a minimally invasive surgical procedure according to the present invention.

DESCRIPTION OF THE ILLUSTRATED EMBODIMENTS

For the purposes of promoting an understanding of the principles of the invention, reference will now be made to the embodiments illustrated in the drawings and specific language will be used to describe the same. It will nevertheless be understood that no limitation of the scope of the invention is thereby intended. Any such alterations and further modifi-

cations in the illustrated devices, and such further applications of the principles of the invention as illustrated herein are contemplated as would normally occur to one skilled in the art to which the invention relates.

The present invention is directed to instruments and methods for insertion of a brace for connection with anchors engaged to bony parts of the body. Referring to FIG. **1**, connecting element or brace **90** is preferably an elongated rod or shaft curved along its length between a connecting end **91** and an insertion end **92** with a radius of curvature R. However, it should be understood that the present invention contemplates that brace **90** can include any configuration known for a rod, implant, or fastener, so long as brace **90** is insertable using installation instrument **20**. Further, brace **90** can be elastic or super-elastic member in the form of a cable, band or artificial ligament that used in tethering or other surgical procedures. Non-rigid bracing elements can be positioned with respect to the anchors with a rigid guide member therealong or at the leading end thereof, which can be thereafter removed once the non-rigid bracing element is in its desired position or left in the patient's body. Brace **90** can be percutaneously or non-percutaneously inserted with an installation instrument **20** into passageways of anchors engaged to a bony structure in the body of an animal subject to stabilize the bony structure.

In the illustrated embodiment, brace **90** is a shaft curved at a single radius R along an arc A, and brace **90** has an axis co-linear with arc A. However, it is contemplated that brace **90** can have a curvature that differs from arc A, or can have a curvature that varies or is compounded along its length. The curvature of brace **90** can be defined by any one or any combination of mathematical relationships, including, for example, linear, exponential, logarithmic, trigonometric, geometric, parabolic, quadratic, cubic, hyperbolic, elliptic, or parametric relationships. Brace **90** in FIG. **1** is inserted via the installation instruments of the present invention through passageways **70***a* and **70***b* of anchors **60***a* and **60***b*, respectively in order to stabilize adjacent vertebrae V**1** and V**2**. The installation instrument can employ any type of fixed geometric relationship to insert brace **90** into passageways **70***a* and **70***b*. This fixed geometric relationship can be governed by any one or combination of a pinned joint, a cam, a four-bar linkage, a guide member that provides a path for translational movement of brace **90**, or any other mechanical relationship that would occur to those skilled in the art.

Installation instrument **20** illustrated in FIG. **1** includes a first support arm **22***a* and a second support arm **22***b*. Support arms **22***a*, **22***b* are pivotally connected at a proximal end **32** of a brace inserter **24**. Brace inserter **24** includes a distal end **33** from which a brace **90** extends. A pivot arm **31** has a straight portion **31***a* extending from proximal end **32** to a curved portion **31***b* that extends to a brace mounting portion **25** at distal end **33**. Inserter **24** is pivotable about a pivot axis P to define a curvilinear arc or axis A. Brace mounting portion **25** includes a brace receiving opening **35** at distal end **33**.

Preferably, brace **90** is supported by mounting portion **25** in receiving opening **35** so that brace **90** is relatively fixed with respect to inserter **24**, maintaining alignment of brace **90** along arc axis A during insertion of brace **90**. Curved portion **31***b* includes a channel **34** extending therealong that receives a brace coupler **36** therein. Preferably, brace coupler **36** is an elongated pin that extends along arc axis A from distal end **33** to a thumb screw **37** adjacent pivot arm **31**. As shown in FIG. **3**, brace coupler includes an elongated pin having a distal end **36***a* that is preferably threaded, and is received within an internally threaded bore **93** formed at brace connecting end **91**. It is further contemplated that the pin can be a wire or a flexible rod. Thumb screw **37** is manipulated by the surgeon to connect brace **90** to inserter **24** at brace mounting portion **25**. After brace **90** is inserted, the surgeon manipulates thumbscrew **37** to disconnect brace **90** from inserter **24**.

The present invention also contemplates other mechanisms for connecting brace **90** to inserter **24**. For example, in FIG. **3***a* brace coupler **36** includes a draw bar **140** positionable within channel **34**. Bar **140** has a distal end **142** with a pair of opposed jaws **143** forming a mouth **145**. Each jaw **143** includes a tooth **144** projecting therefrom towards the opposing jaw. Brace **90'** is the same as brace **90**, except brace **90'** has a connecting end **91'** with a connecting post **94** extending therefrom.

Connecting post **94** is tapered from connecting end **91'** to tip **96**, and is configured to mate with jaws **143** in mouth **145** when jaws **143** are clamped around connecting post **94**. Connecting post **94** includes a recess **95** formed adjacent connecting end **91'** configured to receive teeth **144** therein. In order to clamp connecting post **94**, a proximal end of draw bar **140** extends from inserter **24**, as shown in FIG. **1** with respect to coupler **36**, and has a threaded thumbscrew engaged thereto. The jaws are actuated and clamped around connecting post **94** by threading the thumbscrew in an appropriate direction to draw bar **140** into channel **34**. Jaws **143** are pressed towards one another and teeth **144** are received into recess **95**, thereby connecting brace **90'** to inserter **24**. Preferably, connecting post **94** is indexed so that brace **90'** can only be coupled to inserter **24** with brace **90'** extending along axis A. This indexing can be accomplished by providing two recesses **95** each sized to receive tooth **144** and positioned on post **94** such that brace **90'** can only be coupled via teeth **144** if brace **90'** is oriented along axis A.

Inserter **24** has a bottom surface **25***a* that is preferably curved along axis A to facilitate smooth percutaneous insertion of brace **90**. Further, curved portion **31***b* has at mounting portion **25***a* thickness t**1** between bottom surface **25***a* and a top surface **25***b*. The thickness increases along the length of curved portion **31***b* of pivot arm **31** in a smooth taper to a thickness t**2** adjacent the straight portion **31***a*. Thickness t**2** is preferably greater than thickness t**1**, facilitating percutaneous insertion and withdrawal of curved portion **31***b* while minimizing damage and trauma to the surrounding tissue.

Support arms **22***a* and **22***b* have proximal end portions adjacent axis P with tool bores **26***a* and **26***b*, respectively, for receiving a driving tool therethrough to manipulate anchors **60***a* and **60***b*, respectively, as described further below. In the illustrated embodiment, support arm **22***a* includes an upper post **28***a* having a channel **23***a* extending upwardly to the proximal end portion and communicating with tool bore **26***a*. An anchor extension **30***a* is mounted in channel **23***a* via a thumbscrew **27***a* threadedly received in a threaded aperture **29***a* that extends through upper post **28***a* and anchor extension **30***a*. Anchor extension **30***a* is mounted at its lower or distal end to anchor **60***a*. Similarly, support arm **22***b* includes an upper post **28***b* having a channel **23***b* communicating with tool bore **26***b*. An anchor extension **30***b* is mounted in channel **29***b* via a thumbscrew **27***b* threadedly received in a threaded aperture (not shown) extending through upper post **28***b* and anchor extension **30***b*. Anchor **30***b* is mounted at its lower or distal end to anchor **60***b*. The present invention also contemplates that upper post **28***a* and anchor extension **30***a*, and similarly upper post **28***b* and anchor extension **30***b*, are not separate components but rather are formed as a unit to which brace inserter **24** is pivotably attached.

Inserter **24** is pivotally connected to upper posts **28***a* and **28***b* of support arms **22***a* and **22***b*, respectively. As shown in FIG. **2**, a cross-section taken at line **2-2**, inserter **24** is positioned between support arms **22***a* and **22***b*. Upper post **28***a* has

a cylindrical portion **46***a* with a first flanged bushing **47***a* extending therefrom. Upper post **28***b* has a cylindrical portion **46***b* with a second flanged bushing **47***b* extending therefrom. Bushings **47***a* and **47***b* are rotatably received in a through-hole **39** that extends through pivot arm **31**. Bushings **47***a* and **47***b* define a through opening **48** for receiving a pin **49** therein to secure posts **28***a* and **28***b* to pivot arm **31**. Preferably, pin **49** is threaded along a portion of its length to engage internal threads in bushing **47***a*, and the head of pin **49** sits within a countersink formed in cylindrical portion **46***b* at bushing **47***b* to maintain clearance of bore **26***b*.

An alternate form of pivot arm **31** for pivoting rod inserter **24** is illustrated in FIG. **2***a* and designated as rod inserter **24'**, and like elements between inserter **24** and **24'** are designated with like reference numerals. Inserter **24'** has pivot arm **122** extending from curved portion **31***b* to a proximal end **123**. A handle **128** is positioned adjacent brace mounting portion **25** on pivot arm **122** to facilitate percutaneous insertion of brace **90** and withdrawal of the instrument by the surgeon. A pair of arms **124**, **126** adjacent proximal end **123** form a passage therebetween. The passage is configured to receive support arms **22***a*, **22***b* between arms **124** and **126**. Holes **125** and **127** formed through arm **124** and **126**, respectively, are provided for a connection mechanism to pivotally connect inserter **24'** to support arms **22***a* and **22***b*.

Referring now to FIG. **4**, details of anchor extensions **30***a* and **30***b* and anchors **60***a* and **60***b* (hereinafter collectively referred to as anchor extension **30** and anchor **60**) will now be described. In FIG. **4**, anchor **60** is shown fragmentarily as a bone screw **61** with its head **63** mounted in a receiver or connector. In FIG. **1**, screws **61***a* and **61***b* are shown cannulated with central passage **85***a* and **85***b*, respectively; however, non-cannulated screws **61** are also contemplated.

In the illustrated embodiment, the receiver or connector is a yoke **68** that defines a passageway **70** for receiving brace **90** therethrough and a set screw **76** to secure brace **90** in yoke **68**. Yoke **68** is mountable to anchor extension **30** before and during percutaneous placement and securement of anchor **60** to the bony structure. Anchor extension **30** includes an outer sleeve **40** and an inner sleeve **50** disposed within a bore **45** through outer sleeve **40**. Inner sleeve **50** defines a bore **51** therethrough that communicates with the channel and tool bore **26** of the upper post **28** to which inner sleeve **50** is attached (FIG. **1**). Distal end **53** of inner sleeve **50** includes a lip **52** extending radially therearound projecting into inner bore **51**. Lip **52** retains set screw **76** on inner sleeve **50** with screw **76** at least partially threaded into yoke **68**, thereby mounting anchor **60** on anchor extension **30**.

Screw **61** has bone engaging threads formed on shank **62** and a head **63** that includes tool opening **64**, such as a hex opening or the like, configured to receive a driving tool. In a preferred form, anchor **60** is a multi-axial screw assembly that has yoke **68** pivotably coupled to head **63** of screw **61**. However, the use of an anchor **60** that does not include a screw having multi-axial capabilities is not precluded by the present invention. As is known in the art, screw **61** is capable of being rotated within yoke **68** to assume a plurality of angles between axes L**1** and L**2**. Further, screw **61** can be rotated 360 degrees about axis L at any one of the angular positions between axis L**1** and L**2**. One specific example of a multi-axial screw having application with the present invention is described in U.S. Pat. Nos. 5,797,911 and 5,879,350, each of which is incorporated herein by reference.

In the illustrated example, anchor **60** includes a connector in the form of a generally cylindrical yoke **68** having passageway **70** therethrough for receiving brace **90**. Head **63** of screw **61** is received within a bowl **69** formed at the bottom of yoke **68**. A groove **67** is formed in bowl **69**, and a collar **65** is retained in bowl **69** via groove **67**. Collar **65** captures screw **61** in yoke **68**, and is configured to mate with head **63** to allow multi-axial orientations of screw **61** as described above. A cap **66** is positioned over head **63** and limits upward displacement of screw **61** in yoke **68**.

Yoke **68** includes arms **71** extending upwardly from bowl **69** on opposite sides of passageway **70**. Arms **71** have internal threads **72** configured to mate with external threads **77** on set screw **76**. Set screw **76** has upper tool engaging portion **78** having tool dimension d**2** and a lower tool engaging portion **79** having tool dimension d**1** that is less than d**2**. Set screw **76** has a shoulder **80** that is supported on inner sleeve **50** by lip **52**. Set screw **76** is positioned with shoulder **80** on lip **52** by threading external threads **77** past lip **52**. In FIG. **4**, set screw **76** is partially threaded into internal threads **72** of yoke **68** in order to couple anchor **60** to anchor extension **30**. Upper tool engaging portion **78** has a reduced thickness portion **81** where it joins lower tool engaging portion **79**. Thus, in this embodiment, set screw **76** is a break-off type set screw which severs at reduced thickness portion **81** when a predetermined threshold torque is applied at upper tool engaging portion **78**, thus allowing a desirable and uniform securing force to be applied to brace **90** with each of the set screws **76**. Another advantage is that set screw **76** can be released from anchor extension **30** when set screw **76** is severed.

Yoke **68** is received within recess portion **42** at distal end **41** of outer sleeve **40**. As shown in FIG. **5**, an end view of outer sleeve **40**, recess **42** is shaped with a generally cylindrical wall with a couple of flat surface to conform to the outer perimeter of yoke **68** at upper end surfaces **73**. Upper surfaces **73** of arms **71** are held firmly against recessed surface **44** by set screw **76**, which is releasably coupled to yoke **68** and inner sleeve **50**, by drawing yoke **68** into recess **42** via inner sleeve **50**. Anchor **60** is mounted to anchor extension **30** and held in a fixed position relative to anchor extension **30**. Axis L**3** of anchor extension **30** is aligned with axis L**1** of bone screw **61** when a guidewire, such as guidewire **280** of FIG. **18**, or a tool, such as tool **100** or **100'** of FIGS. **20** and **20***b* is inserted into screw **61** to maintain anchor **60** in this aligned position.

Referring to FIGS. **6** and **7**, inner sleeve **50** and its connection with outer sleeve **40** will be further described. Inner sleeve **50** includes lower cylindrical tubular body portion **53**. Fingers **54** extend from body portion **53** to upper end **55** of inner sleeve **50**. Fingers **54** include retainers **56** adjacent upper end **55**. A pin or nub **58** is positioned on and extends from the outer surface of each finger **54**. Outer sleeve **40** includes upper paired holes **57***a* and lower paired holes **57***b*, which serve as catches. As shown in FIG. **6**, nubs **58** are positionable within catches **57***a* or **57***b* formed in outer sleeve **40** to hold inner sleeve **50** relative to outer sleeve **40**. Retainers **56** contact upper end **46** of outer sleeve **40** when nubs **58** are positioned in lower catches **57***b*. Retainers **56** limit the depth of insertion of inner sleeve **50** into bore **45** of outer sleeve **40**. Retainers **56** also facilitate insertion and withdrawal of inner sleeve **50** relative to outer sleeve **40** by providing the surgeon means to grasp fingers **54** and squeeze.

Finger **54** can be deflected towards one another as indicated by arrows P in order to disengage nubs **58** from catches **57***a* and **57***b*, thus allowing rotation and axial translation of inner sleeve **50** in outer sleeve **40**. Outer sleeve **40** includes notches **59** formed at upper end **46** on opposite sides of outer sleeve **40** between respective ones of the paired catches **57***a* and paired catches **57***b*. Notches **59** allow inner sleeve **50** to be positioned in outer sleeve **40** with nubs **58** at a depth approximating the location of catches **57***a* and **57***b* without deflecting fingers **54**. Fingers **54** can then be pressed together to with-

drawal nubs **58** from notches **59**, allowing inner sleeve **50** to be rotated and nubs **58** positioned in the desired paired catches **57***a* or paired catches **57***b*.

With nubs **58** positioned in lower catches **57***b*, set screw **76** extends into recess portion **42** of outer sleeve **40** enough to allow anchor **60** to be mounted on extension **30** by threading set screw **76** partially into yoke **68**. Nubs **58** can then be positioned in upper catches **57***a*, retracting yoke **68** into recessed portion **42** of outer sleeve **40** to hold anchor **60** firmly in place as shown in FIG. **4** and described above. Anchor **60** can thus be pre-assembled with anchor extension **30** before engaging anchors **60** to the bony structure, allowing the assembled anchor **60** and anchor extension **30** to be positioned percutaneously together in a minimally invasive approach to the bony structure. However, it is also contemplated that anchor extension **30** can be mounted on an anchor **60** that is already engaged to the bony structure.

Referring now to FIGS. **8** and **9**, another embodiment of an installation instrument is illustrated. In FIG. **9**, anchor extensions **230** are not illustrated. Anchor extensions **230** include an inner sleeve **240** that is received proximally within outer sleeve **250** in a manner similar to that described above with respect to anchor extension **30**. The inner sleeve **240** and outer sleeve **250** are further illustrated in FIGS. **14-17**, and are described in further detail below.

Installation instrument **220** includes a brace inserter **224** having a first support arm **222***a* and a second support arm **222***b*. Support arms **222***a*, **222***b* come together and are fixedly connected at a proximal end **232** of a pivot arm **231**. Referring now further to FIGS. **9***a* and **10**, pivot arm **231** includes a distal end **233** from which brace **290** extends. Brace inserter **224** includes a brace mounting portion **225** adjacent distal end **233** for securing a brace, such as brace **290**, thereto. Brace **290** is similar to brace **90**, and includes a connecting portion **291** as described further below. Brace inserter **224** is pivotable about a pivot axis P to define a curvilinear arc or axis A. Pivot arm **231** of brace inserter **224** is preferably curved along curved portion **231***b* to follow axis A and facilitate smooth percutaneous insertion and withdrawal of pivot arm **231**. As shown in FIG. **9***a*, brace mounting portion **225** includes a brace receiving opening **235** extending proximally from distal end **233**.

Pivot arm **231** includes a channel **234** extending from distal end **233** therealong towards proximal end **232**. Channel **234** receives a brace coupler **236** therein that is secured to inserter **224** by a nut **239** and pin **228**. For the purposes of clarity, nut **239** and brace coupler **236** are shown displaced from channel **234** except at distal end **233**. Preferably, brace coupler **236** is an elongated flexible member that extends with arc axis A from distal end **233** through nut **239** to a set screw **237** adjacent proximal end **232**. Coupler **236** is pivotably coupled to inserter **224** at brace mounting portion **225** via pin **228**. Set screw **237** is threadingly received in a threaded opening formed in nut **239**. Brace mounting portion **225** also includes stop pin **229** extending therethough in communication with brace receiving opening **235**.

Referring now further to FIGS. **11-12**, brace **290** is positionable in brace receiving opening **235** so that brace **290** is relatively fixed with respect to inserter **224** by brace coupler **236**, maintaining alignment of brace **290** along arc axis A during insertion of brace **290**. Brace coupler **236** includes gripping portion **270** at its distal end for gripping brace **290**. Gripping portion **270** has through-hole **272** receiving pin **228** therethrough and rotatably coupling gripping portion **270** at brace mounting portion **225**. Gripping portion **270** further includes a tooth **274** extending therefrom at its distal end **271**. A notch **276** extends proximally from tooth **274**.

Brace **290** has a connecting end **291** with a connecting post **294** extending therefrom. Preferably, connecting post **294** is tapered from connecting end **291** to tip **296**, and has a recess **297** with a length and depth configured to receive tooth **274** at the end of the recess **297** adjacent tip **296** and stop pin **229** at the end of recess **297** adjacent connecting end **291**. Stop pin **229** contacts brace **290** in recess **297** to limit the depth of insertion of brace **290** into opening **235**.

In one aspect of the invention, brace **290** is indexed by providing a single recess **297** at a predetermined location on post **294**. Post **294** cannot be inserted properly into channel **235** unless stop pin **229** is received in recess **297**, thus ensuring an orientation of brace **290** with respect to inserter **224** that is determined by the position of recess **297** with respect to stop pin **229**. Preferably, the position of recess **297** is such that it is located with respect to gripping portion **270** so that the radius of curvature of brace **290** extends from inserter **224** along arc axis A. This ensures accurate positioning and orientation of brace **290** with respect to anchors **60** during installation of brace **290**.

In order to grip brace **290** when connecting portion **291** is placed into opening **235**, gripping portion **270** is rotated downwardly about pin **228** in the direction of arrow R by drawing brace coupler **236** proximally via threading of set screw **237** in a first direction with respect to lock nut **239**. Set screw **237** is threaded in an opposite second direction to push brace coupler **236** distally and therefore bend coupler **236**, rotating tooth **274** about pin **228** in the direction opposite arrow R out of recess **297** thereby releasing brace **290**.

Referring back to FIGS. **8** and **9**, support arms **222***a* and **222***b* have through-holes **223***a*, **223***b* for receiving a clamping mechanism **221**. Clamping mechanism **221** draws arms **222***a*, **222***b* towards one another to pivotably secure anchor extensions **230***a*, **230***b* therebetween. Pivot nuts **225***a* and **225***b* are positionable in through holes **223***a* and **223***b*, respectively. A clamping bar **225** extends between arms **222***a* and **222***b*, and has threaded bores at each end that allow bar **225** to be secured to and clamp arms **222***a*, **222***b* via threaded fastener **226** and clamping knob **227** having a threaded stem **227***a*. Clamping knob **227** is manipulated by the surgeon to secure or release extensions **230***a* and **230***b* from arms **222***a* and **222***b*.

In the illustrated embodiment, pin **260***a* is press fit into opening **262***a* of arm **222***a*. Anchor extension **230***a* is rotatably mounted on support arm **222***a* via pin **260***a*. Similarly, anchor extension **230***b* is rotatably mounted on support arm **222***b* via pin **260***b* press fit into opening **262***b* of arm **222***b*. Other techniques for securing pins **260***a*, **260***b* and mounting extensions **30***a*, **30***b* thereto are also contemplated as would occur to those skilled in the art. Each arm **222***a*, **222***b* can be provided with a stop bar **264***a*, **264***b* extending therefrom towards the other support arm **222***b*, **222***a*, respectively. Stop bars **264***a* and **264***b* limit rotation of instrument **220** along axis A when stop bars **264***a*, **264***b* contact a corresponding one of the extensions **230***a*, **230***b*.

Referring now to FIGS. **14-17**, anchor extensions **230** that coupled to inserter **224** will now be described in further detail. These anchor extensions **230** are illustrated in an assembled condition in FIG. **8**. It should be noted that second outer sleeve **240***b* of FIG. **17** is illustrated rotated 90 degrees about its longitudinal axis as compared with the orientation of the elevational view of first outer sleeve **240***a* of FIG. **16**.

Although anchors are not shown in FIG. **8**, anchor extension **230***a* can have mounted thereon at its lower or distal end a first anchor, such as anchor **60***a* described above. Similarly, anchor **230***b* can have mounted at its lower or distal end a second anchor, such as anchor **60***b*, described above. Anchor extensions **230***a*, **230***b*, collectively referred to as anchor

extensions **230**, each include outer sleeve **240** and an inner sleeve **250** disposed within a bore **245** through outer sleeve **240**. Inner sleeve **250** defines a bore **251** therethrough that allows tools to extend to the anchor. Distal end **253** of inner sleeve **250** includes a lip **252** extending radially therearound projecting into inner bore **251**. Lip **252** supports a set screw, such as set screw **76** described above, on the distal end of inner sleeve **250**.

Yoke **68** is preferably received within end portion **242** at distal end **241** of outer sleeve **240**. As shown in FIG. **16**, end portion **242** has a U-shaped opening that is alignable with passageway **70** to accommodate insertion of brace **290** therethrough. The arms **244** of end portion **242** are alignable with the arms **71** of yoke **68**, receiving arms **71** therein, firmly securing anchor **60** onto anchor extension **230** during insertion of the anchor.

The positioning of inner sleeve **250** into outer sleeve **240** will be further described, although those skilled in the art will appreciate that anchor extension **30** and anchor extension **230** are similar in many respects. Inner sleeve **250** includes lower gripping elements or fingers **254** that include circular relief portions **277** therebetween to allow flexing of fingers **254**. Inner sleeve **250** further includes upper notch **256** and lower notch **256'** between fingers **254** and upper end **255**. Outer sleeve **240** includes a plunger-type spring biased retainer **257** extending therein adjacent bore **245** having a cross bar **258** extending transversely from a plunger **259**. Cross bar **258** is selectively positionable in a desired one of the notches **256** and **256'** to hold inner sleeve **250** relative to outer sleeve **240**. Shoulder **261** limits the depth of travel of inner sleeve **250** distally into bore **245** of outer sleeve **240**. When cross bar **258** is in upper notch **256**, set screw **76** of anchor **60** can be threaded onto or pushed between fingers **254** at distal end **253**, where set screw **76** is retained thereon by lip **252**.

If not already secured to set screw **76**, yoke **68** can then be at least partially threaded onto set screw **76**. Movement of inner sleeve **250** relative to outer sleeve **240** is facilitated by depressing plunger **259** to lift cross bar **258** out of upper notch **256**. Inner sleeve **250** is moved proximally to position cross bar **258** in lower notch **256'**, drawing yoke **68** between the arms **244** and against end portion **242** with passage **70** aligned with the U-shaped opening between the arms **244**. Axis L**3** of anchor extension **230** is aligned with axis L**1** of bone screw **61** when a guidewire or a tool, such as tool **100** or **100'** of FIGS. **20** and **20***b* is inserted into screw **61** to maintain anchor **60** in this aligned position. An alignment pin **263** of inner sleeve **250** is received in slot **249** of outer sleeve **240** to ensure and maintain proper alignment of inner sleeve **250** in outer sleeve **240**.

The assembly of anchor extensions **230***a* and **230***b* to one another and also to inserter **224** will now be described. Each anchor extension **230** includes passage **248** through outer sleeve **240** adjacent the proximal end **243**. A coupling pin **249***a* is press fit or otherwise secured in passage **248***a* on the side of anchor extension **230***a* adjacent anchor extension **230***b*. After anchor extensions **230***a* and **230***b* and anchors **60***a* and **60***b* are secured to bony structure, anchor extensions **230***a* and **230***b* are manipulated through the skin and tissue to place pin **249***a* into the portion of passage **248***b* adjacent anchor extension **230***a*. Inserter **224** is secured to anchor extensions **230***a* and **230***b* by placing pin **260***a* in a portion of passage **248***a* of first extension **230***a* opposite pin **249***a*, and pin **260***b* in a portion of passage **248***b* of second extension **230***b* opposite pin **249***a*. Pins **260***a* and **260***b* are rotatably received in the passages **248***a* and **248***b*, respectively, and anchors extension **230***a* and **230***b* are secured to support arms **222***a* and **222***b* via clamping mechanism **221**. Bores **251***a* and **251***b* of inner sleeves **250***a* and **250***b* remain substantially unobstructed for access to anchors **60***a* and **60***b* when instrument **220** is assembled.

Techniques using the above described installation instruments **20**, **220** will now be described. The present invention contemplates that placement of anchors **60** into the bony structure can be completed without an anchor extension **30** or **230** mounted thereto, and anchor extension **30** or **230** is thereafter mounted on the anchor **60** engaged to the bony structure. Other techniques contemplate that the anchor **60** is mounted on anchor extension **30** or **230**, and anchor extension **30** or **230** and anchor **60** are placed through an open incision, micro-incision, a tube or cannula, or directly through the skin and tissue of the animal subject to engage anchor **60** to a bony structure, such as the pedicles of vertebrae V**1** and V**2** as shown in FIG. **1**.

The surgical techniques of the present invention can employ any type of known imaging system to determine and locate optimum placement and orientation of the anchors in the bony structure and, if necessary, to locate skin locations for percutaneous puncture entry of the anchors. Image guided systems useful in practicing the invention and in placing anchors **60** are known in the art. Examples of image guided technology are provided in U.S. Pat. No. 5,772,594; U.S. Pat. No. 5,383,454; U.S. Pat. No. 5,851,183; U.S. Pat. No. 5,871,445; U.S. Pat. No. 5,891,034; and PCT Publication WO 99/15097, each of which is incorporated herein by reference in its entirety. The STEALTHSTATION® or ION™ systems, sold by Medtronic Surgical Navigation Technologies, Inc. can further be used with the present invention for pre-operative planning and image guided navigation of anchor placement and installation of brace **90**.

Other techniques for locating and placing anchors **60** into the bony structure are also contemplated herein as would occur to those skilled in the art. For example, a CT scan or x-ray can be used for pre-operative planning of anchor positioning and orientation. Anchor insertion can be monitored using any known viewing instrument or apparatus. Another example contemplates anchor placement through a cannula or sleeve inserted through the skin that forms a working channel to the anchor location. Anchor placement into the bony structure can be monitored endoscopically or microscopically through the cannula.

In one specific technique, a guidewire, such as guidewire **280** of FIG. **18**, of sufficient length is inserted percutaneously and anchored to the bony structure. The guidewire is coupled to a trackable instrument that is tracked via an image guided surgical system that generates a display on a computer monitor. Further examples of such instruments and systems are described in further detail in PCT Publications WO 99/15097 and WO 99/26549, each of which is incorporated herein by reference in its entirety. With the guidewire secured at the appropriate location on the bony structure, various instruments for preparing and inserting the screw into the bony structure can be guided by the guidewire. The preparation and insertion can be monitored via a tracking instrument coupled to the various preparation and insertion instruments.

Various instruments can be used to prepare the surgical site for anchor insertion. For example, in FIG. **19** there is illustrated a cannulated awl **300** that is inserted over the guidewire to prepare the bony structure for screw insertion. Awl **300** has a bore **306** extending between distal end **303** and proximal end **302** that allows awl **300** to be inserted over the guidewire. Awl **300** is configured at proximal end **302** to engage a driving instrument, which can also include a tracking instrument to monitor insertion depth. Awl **300** has shaft **304** extending to

distal end **303**. A cutting head **307** at distal end **303** prepares a hole in the bony structure for the anchor.

After determining the desired position and orientation of guidewire **280** in the bony structure and the skin location for puncture entry and preparing the screw hole, a cannulated anchor **60** mounted on anchor extension **30** or **230** can be placed over the guidewire and advanced, for example, through the skin and tissue directly, through an incision, or through a cannula to the prepared hole. A driving tool, such as cannulated driving tool **100'** shown in FIG. **20***a*, is used to threadingly engage anchor **60** to the bony structure. Cannulated tool **100'** includes bore **106'** extending between proximal end **102'** and distal end **103'**. Distal end **103'** includes an engaging portion **107'** to mate in tool engagement recess **64** of screw **61**. Tool **100'** is placed over the guidewire and through the tool bores of the anchor extensions **30**, **230** to drive the cannulated screw **61** into the bony structure.

It is further contemplated that if the technique does not employ a guidewire, a driving tool **100** of FIG. **20***b* can be inserted through the tool bores of the anchor extensions **30**, **230** to screw **61**. Tool **100** includes proximal end **102** and a shaft **104** extending to distal end **103**. Proximal end **102** is preferably configured to engage a wrench or handle to facilitate application of a driving force with tool **100**. Distal end **103** includes a lower engaging portion **107** having a length configured to mate in tool engagement recess **64** of screw **61** to drive screw **61** into the bony structure.

Anchor extension **30**, **230** follows anchor **60** towards the bony structure as anchor **60** is driven therein with driving tool **100** or **100'**. Tool **100** is then withdrawn from the tool bore, and if necessary, the guidewire is also withdrawn. In embodiments of anchor **60** having a multi-axial screw, yoke **68** and anchor extension **30**, **230** are pivotable about head **63** by manipulating anchor extension **30**, **230** in the skin and tissue to the desired position.

With anchors **60***a* and **60***b* secured to the bony structure, passageways **70***a* and **70***b* are aligned to receive brace **90**. For instrument **20**, upper posts **28***a* and **28***b* are mounted on anchor extensions **30***a* and **30***b* using thumb screws **27***a* and **27***b*, respectively, aligning passageways **70***a* and **70***b*. With anchors **60** employing a multi-axial screw, the anchor extensions **30***a* and **30***b* can be manipulated into the desired position for connection with upper posts **28***a* and **28***b*. For instrument **220**, anchor extensions **230***a* and **230***b* are manipulated to place pin **249***a* in passage **248***b*, aligning passageways **70***a* and **70***b*. Support arms **222***a* and **222***b* are secured to anchor extensions **230***a* and **230***b* with clamping mechanism **220**. If anchor **60** does not have multi-axial capabilities, the orientation of the anchor extensions required to connect the inserter thereto is accounted for during the determination of the orientation and positioning anchors **60***a* and **60***b* into the bony structure.

Brace **90**, **290** is fixed on inserter **24**, **224** and readied for percutaneous insertion into passageways **70***a* and **70***b* of anchors **60***a* and **60***b*, respectively. Preferably, brace **90**, **290** is curved and has a radius of curvature equal to the distance between passageways **70***a*, **70***b* and pivot axis P. Inserter **24**, **224** swings about pivot axis P to move brace **90** in a forward direction along arc axis A and thereby introducing pointed end of brace **90**, **290** into the subject's body towards the aligned passageways **70***a* and **70***b*. Brace **90**, **290** and inserter **24**, **224** are further pivoted to pass portions of brace **90** through passageways **70***a* and **70***b* of anchors **60***a* and **60***b*.

As discussed above, it is preferred that brace is indexed so that it can be secured at a predetermined orientation onto the installation instrument **20**, **220**. This ensures alignment of brace **90**, **290** along the insertion path of the installation instrument and through the passageways of anchors **60***a* and **60***b*. In a further form, trocar **390**, as shown in FIG. **13**, can be used to puncture skin and tissue along the insertion path and facilitate insertion of brace **90**, **290** in a percutaneous procedure. Trocar **390** has a connecting end **394** identical to that of brace **290**. However, trocar **390** has a short shaft **392** extending to puncture tip **398**. Puncture tip **398** has a sharp point **399** to facilitate insertion and create a pathway through skin and tissue of the patient.

Brace **90**, **290** is placed through the passageways of anchors **60***a* and **60***b* to the desired position, which can be confirmed radiographically or with any know imaging technique. Set screws **76***a* and **76***b* of each anchor **60***a* and **60***b* are driven downward to contact brace **90**, **290**. A driving tool is placed through the tool bores of the installation instruments **20**, **220** to engage either the upper tool engagement portion **78***a*, **78***b* or lower tool engagement portion **79***a*, **79***b* and drive set screw **76***a*, **76***b* downwardly, tightening it against brace **90**, **290** until set screw **76***a*, **76***b* is firmly seated thereagainst. Inserter **24**, **224** can then be uncoupled from brace **90**, **290** and removed from the subject by swinging inserter **24**, **224** back along arc axis A. A tool is positioned in upper tool engagement portion **78***a*, **78***b* to break off the upper portion of the set screw **76***a*, **76***b* upon application of the requisite torque, releasing the anchor extension **30***a*, **30***b* from anchor **60***a*, **60***b* and allowing removal of extensions **30**, **230** from the subject.

The surgeon may also desire to initially seat set screw **76***a*, **76***b* using a tool in upper tool engagement portion **78***a*, **78***b* and apply sufficient torque to severe the break-off portion of set screw **76***a* **76***b* before uncoupling brace **90**, **290**. In an alternate form, the driving force that is applied to set screw **76***a*, **76***b* could force shoulder **80***a*, **80***b* through lip **52***a*, **52***b*, deflecting lip **52***a*, **52***b* downward to release set screw **76***a*, **76***b* from inner sleeve **50***a*, **50***b* of instrument **20** or deflect fingers **154***a*, **154***b* outward to release set screw **76***a*, **76***b* from inner sleeve **150***a*, **150***b* of instrument **220**.

In one specific application of the present invention, brace **90** is installed to stabilize a first vertebra V**1** and second vertebra V**2** after placement of one or more implants I into disc space D as shown in FIG. **21**. The method includes removing the intervertebral disc from the space between first and second vertebral bodies through one percutaneous puncture in the subject. An implant I is introduced into the disc space. Implant I is preferably one or more interbody fusion devices or the like as is known in the art. The first and second anchors **60***a* and **60***b* and anchor extensions **30***a* and **30***b* are engaged to the first and second vertebral bodies, respectively, through second and third percutaneous punctures in the subject as described above. If desired, the anchor extensions **30** can be manipulated by the surgeon to apply a load to compress or distract the vertebrae prior to installing brace **90**. Brace **90** is installed through a fourth percutaneous puncture in the subject using installation instrument **20** and secured to anchors **60***a*, **60***b* as described above. In some surgical procedures, it may be desirable to insert one or more additional braces to stabilize the bony structure using the above described installation instrument and techniques.

The present invention has application in further minimally invasive and open techniques for placing interbody fusion device into a disc space between adjacent vertebrae. For example, transforaminal, posterior, and posterior-midline approaches to the disc space are contemplated for placement of one or more implants or interbody fusion device in the disc space. Examples of such techniques are described in U.S. patent application Ser. No. 09/692,932, filed on Oct. 20, 2000. The present invention further has application for engagement of one or more rigid elongated connecting elements to one or

more anchors for stabilization of a motion segment without fusion of the motion segment. The present invention also has application for engagement of one or more flexible elongated connecting elements to one or more anchors for stabilization of a motion segment without fusion of the motion segment.

As shown in FIG. **21**, installation instrument **20** is mounted on anchors **60***a* and **60***b* engaged to vertebrae V**1** and V**2**, respectively. Brace **90** is shown before percutaneous insertion. A cannula **110** is percutaneously inserted to a position adjacent disc space D**1**. As shown in FIG. **22**, a plan view taken at skin surface S, first and second anchor extensions **30***a*, **30***b* and brace **90** are positioned on one side of midline M of the spine. Cannula **110** is positioned on the opposite side of midline M. One or more interbody fusion devices, bone graft material, or other material or implants are placed in the disc space. The adjacent vertebrae V**1** and V**2** are then stabilized by installing brace **90** as described above. Thus, a minimally invasive surgical procedure of the present invention contemplates interbody fusion and stabilization of the adjacent vertebrae to be accomplished with four entry holes or punctures through skin S.

The installation instrument of the present invention can also be used to install braces on both sides of midline M of the spine. The installation instrument can also be used to install multiple braces at one or more levels of the spine. The present invention can be used to stabilize adjacent vertebra in conjunction with any minimally invasive or open surgical techniques for placement of one or more interbody fusion devices into a disc space as would occur to those skilled in the art. For example, one or more interbody fusion devices or intervertebral spacers may be inserted into the disc space via an anterior approach. Examples of anterior approaches are described in PCT International Publication No. WO 97/30666; pending U.S. patent application Ser. No. 09/287,917; and pending U.S. patent application Ser. No. 09/498,426 filed on Feb. 4, 2000; each of which is incorporated herein by reference in its entirety. Further, the present invention may also be used to stabilize adjacent vertebrae, or any other bony structure, without placement of fusion devices or implants in the bony structure.

It is further contemplated that brace **90** may be installed and secured to anchors engaged in respective ones of three vertebrae using an installation instrument such as the one illustrated in FIGS. **23-24** and designated generally at **320**. Instrument **320** is similar to and functions principally the same as instrument **220**, except instrument **320** has a size and configuration adapted for this two level stabilization procedure. In this embodiment, three anchors that are like anchor **60** (not shown) are engageable to respective ones of three vertebrae or other bony structure using any of the above described techniques. Three anchor extensions **330***a*, **330***b*, **330***c* each include outer sleeves **340***a*, **340***b*, **340***c* and inner sleeves **350***a*, **350***b*, **350***c* that are substantially the same as outer sleeve **240** and inner sleeve **250** of instrument **220**. Anchor extensions **330** are each mounted on a corresponding one of the three anchors. After the anchors are engaged to the bony structure, the three anchor extensions **330***a*, **330***b*, **330***c* are manipulated through the skin and coupled to one another in the same manner as described above with respect to anchor extensions **230***a* and **230***b*. Support arms **322***a*, **322***b* of inserter **324** are then rotatably mounted on the anchor extensions **330***a*, **330***b*, and **330***c* and clamped via clamping mechanism **321**. Support arms **322***a*, **322***b* and clamping mechanism **321** are similar to support arms **222***a*, **222***b* and clamping mechanism **221** of installation instrument **220** except that each is sized to accommodate three anchor extensions **330** therebetween. An indexed brace **490** is similar to brace **290** and has a sufficient length for a two-level stabilization procedure. Brace **490** is secured to pivot arm **331** and then inserted through the passageways of the anchors as described above with respect to installation instrument **220**.

With reference to FIGS. **25***a*-**25***g*, further description of minimally invasive surgical techniques will be provided. It should be understood that although surgical techniques described with reference to FIGS. **25***a*-**25***g* make specific reference to installation instrument **220** with brace inserter **224** and anchor extensions **230**, the other embodiment installation instruments discussed herein are also contemplated with such techniques. Furthermore, thought the technique is described with reference to first and second vertebrae V**1** and V**2**, it should be understood that the techniques described herein have application with other bony structures and elements of the body. In FIG. **25***a* an incision H**1** has been made through the skin and tissue of the patient in order to provide access to disc space D**1** between vertebrae V**1** and V**2**. In the illustrated embodiment, incision H**1** is made for a postero-lateral approach to the disc space, although transforaminal, posterior, and posterior-midline, lateral, antero-lateral and anterior approaches to the disc space are also contemplated. A retractor sleeve **500** is positioned through incision H**1** to provide access to disc space D**1** for performing surgical procedures in and/or adjacent to the disc space and vertebrae V**1** and V**2**. Surgical procedures such as a laminotomy, laminectomy, foramenotomy, facetectomy and/or discectomy can be performed through retractor sleeve **500**. A spinal fusion device, artificial disc or other interbody device indicated by implant I can also be inserted in the disc space through retractor sleeve **500**. Examples of retractor sleeves and surgical approaches to the spinal disc space for inserting an implant or fusion device in the disc space through a retractor sleeve are provided in U.S. patent application Ser. No. 09/692,932 filed on Oct. 20, 2000 and also in U.S. patent application Ser. No. 09/815,963 filed on Mar. 13, 2001, each of which is incorporated herein by reference in its entirety.

In one specific procedure, it is contemplated that a needle having a stylet is inserted through the skin and tissue of the patient and entered into the bone at the desired location. The stylet is removed from the needle, and a guide wire inserted through the central needle bore and anchored to the bone. The needle is then withdrawn, and sequential dilation of the tissue is completed over the guidewire using one or more tissue dilators of increasing size. The retractor sleeve is then placed over the last inserted dilator.

Such procedures in disc space D**1** through retractor sleeve **500** are considered to be minimally invasive because the cutting and retraction of muscle and soft tissue required to access disc space D**1** and vertebrae V**1** and V**2** is minimized. The muscle and other tissue below skin S is sequentially dilated or retracted through incision H**1** to separate the muscle and tissue and provide a pathway for insertion of retractor sleeve **500**. Alternatively, retractor sleeve **500** can be configured to retract the muscle and tissue through incision H**1** to accommodate its insertion and also after its insertion. Thus, the size of incision H**1** is minimized to the size needed to accommodate retractor sleeve **500**. For example, in one surgical technique, incision H**1** has a length in the direction of the central axis of the spinal column that is the same as the cross sectional dimension as retractor sleeve **500**. In one embodiment, incision H**1** is 18 millimeters or less. In another embodiment, incision H**1** is 16 millimeters or less. In a further embodiment, incision H**1** is 14 millimeters or less.

As shown in FIG. **25***b*, once the desired surgical procedures through retractor sleeve **500** have been completed, retractor

sleeve **500** can be withdrawn from incision H**1**. Anchor **60***a* and anchor extension **230***a* are secured to vertebrae V**2** using the techniques described herein. For example, a guidewire can be anchored to a desired location on vertebra V**2** using lateral fluoroscopy or other image guidance instrumentation, and anchor **60***a* and anchor extension **230***a* are placed over the guidewire and anchor **60***a* secured to vertebra V**2**. Alternatively, anchor **60***a* and anchor extension **230***a* could be percutaneously guided through incision H**1** and engaged to vertebra V**2**. As shown in FIG. **25***c*, anchor **60***b* and anchor extension **230***b* can be similarly secured to vertebra V**1**.

In FIG. **25***d*, inserter **224** of installation instrument **220** is mounted on anchor extensions **230***a* and **230***b*. Connecting element or brace **290** is coupled to inserter **224**, and is shown in a position adjacent skin S of the patient before percutaneous insertion of connecting element **290**. In FIG. **25***e*, brace **290** is percutaneously inserted and passed through passageways defined by receiving portions on anchors **60***a* and **60***b*. Brace **290** is then secured to anchors **60***a* and **60***b* with set screws. In FIG. **25***f*, inserter **224** and anchor extensions **230***a*, **230***b* of installation instrument **220** are removed. As also shown in FIG. **25***g*, the entry location of connecting element **290** forms a puncture wound H**2** that is spaced and remote from incision H**1**.

The surgical technique provides for surgical treatment and/or stabilization of at least vertebrae V**1** and V**2**. Surgical procedures are performed in or adjacent vertebrae V**1** and V**2** through retractor sleeve **500**. Anchors **60***a*, **60***b* are engaged to vertebrae V**2** and V**1**, respectively, through the same incision H**1**. The adjacent vertebrae V**1** and V**2** are stabilized by installing brace **290** through puncture wound H**2**. Thus, a minimally invasive surgical technique is provided the only requires an incision for surgical procedures in or adjacent to the disc space and vertebrae V**1** and V**2**, and a puncture would for stabilization of vertebrae V**1** and V**2** with a connecting element.

While the invention has been illustrated and described in detail in the drawings and foregoing description, the same is to be considered as illustrative and not restrictive in character, it being understood that only the preferred embodiment has been shown and described and that all changes and modifications that come within the spirit of the invention are desired to be protected.

What is claimed is:

1. A minimally invasive surgical method, comprising:

making an incision in a patient for accessing first and second bony elements;

placing through the incision first and second anchors coupled to first and second anchor extensions, respectively;

engaging the first and second anchors to the first and second bony elements, respectively;

mounting an inserter instrument on the first and second anchor extensions, the inserter instrument having a pivot axis relative to the anchors and further including a connecting element mounted thereon;

swinging the inserter instrument relative to the anchors about the pivot axis and thereby moving the connecting element through an arc centered on the pivot axis of the inserter instrument;

introducing an end of the connecting element into the patient from a location remote from the incision; and

positioning the connecting element proximate to the first and second anchors.

2. The method of claim **1**, wherein placing first and second anchors includes placing the first and second anchors percutaneously through the incision.

3. The method of claim **2**, wherein introducing the end of the connecting element includes introducing the end of the connecting element percutaneously at the location.

4. The method of claim **1**, further comprising:

securing the connecting element to the first and second anchors;

disconnecting the inserter instrument from the connecting element; and

moving the inserter instrument in a reverse direction through the arc and thereby removing the inserter instrument from the patient.

5. The method of claim **4**, further comprising:

unmounting the inserter instrument from the first and second anchor extensions; and

uncoupling the first and second anchor extensions from the first and second anchors.

6. The method of claim **1**, wherein the connecting element is positioned through receivers in the anchors after introducing the connecting element.

7. The method of claim **1**, further comprising:

removing through the incision material from an intertransverse space between the first and second bony elements;

introducing through the incision one or more devices into an intertransverse space between the first and second bony elements;

engaging first and second anchors to the first and second bony elements after introducing the one or more devices.

8. The method of claim **7**, wherein introducing the one or more devices includes introducing one or more interbody fusion devices via a postero-lateral approach to the intertransverse space between adjacent vertebrae.

9. A method of placing a connecting element in a patient, comprising:

placing first and second anchors in first and second bony elements of the body through an incision in the patient;

positioning first and second anchor extensions with distal ends removably engaged to respective ones of the first and second anchors so that the first and second anchor extensions extend through the incision to proximal ends of the first and second anchor extensions located outside the patient;

manipulating the anchor extensions in the incision so that the proximal ends of the anchor extensions are located closer to one another than the distal ends of the anchor extensions engaged to the first and second anchors;

referencing an elongated connecting element to at least one of the anchor extensions, the connecting element being secured to an installation instrument; and

moving the installation instrument relative to the at least one anchor extension to position the connecting element from outside the patient into passageways of the first and second anchors in the patient that are located between the first and second anchor extensions and the first and second anchors.

10. The method of claim **9**, further comprising referencing the connecting element to each of the first and second anchor extensions.

11. The method of claim **9**, further comprising:

securing the connecting element to the first and second anchors after moving the connecting element into the passageways of the first and second anchors.

12. The method of claim **9**, wherein the incision extends generally in the direction of the central axis of the spine for a distance of about 20 millimeters or less.

13. The method of claim **9**, wherein the first and second bony elements are first and second vertebrae, respectively.

14. The method of claim **9**, wherein the first and second bony elements comprise the same bone.

15. A minimally invasive surgical method, comprising:

making an incision in a patient for accessing first and second bony elements;

placing through the incision first and second anchors, wherein the first and second anchors are configured to be removably coupled to first and second anchor extensions, respectively, wherein the first anchor and the first anchor extension include a first passageway for receiving a connecting element and the second anchor and the second anchor extension include a second passageway for receiving the connecting element;

engaging the first and second anchors to the first and second bony elements, respectively;

referencing a connecting element to a proximal end of at least one of the first and second anchor extensions, the first and second anchor extensions extending through the incision to the proximal end thereof at a location outside the patient;

moving the connecting element relative to the first and second extensions from the proximal ends of the first and second anchor extensions outside the patient to the first and second anchors in the patient;

introducing the connecting element into the passageways of the first and second anchors;

engaging the connecting element in the passageways of the first and second anchors with engaging members received from respective ones of the first and second anchor extensions to the first and second anchors; and

removing the first and second anchor extensions from the first and second anchors after engaging the connecting element in the passageways with the engaging members.

16. The method of claim **15**, wherein moving the connecting element includes swinging an inserter instrument mounted along a pivot axis to proximal ends of the first and second anchor extensions and moving the connecting element through an arc centered on the pivot axis of the inserter instrument.

17. The method of claim **15**, wherein moving the connecting element includes positioning the connecting element percutaneously from a second location to the first and second anchors.

18. The method of claim **15**, wherein the incision extends generally in the direction of the central axis of the spine.

19. The method of claim **18**, wherein the first and second bony elements are first and second vertebrae, respectively.

20. The method of claim **15**, wherein referencing the connecting element includes mounting an inserter instrument to proximal ends of the first and second anchor extensions with the connecting element extending from the inserter instrument.

* * * * *