US 20050286984A1

(19) United States

(12) Patent Application Publication (10) Pub. No.: US 2005/0286984 A1

Weise et al. (43) Pub. Date: Dec. 29, 2005

(54) SCREW THREAD CUTTING APPARATUS AND METHOD

(75) Inventors: **Gary K. Weise**, Plancentia, CA (US); **Richard J. Kesl**, Plancentia, CA (US)

Correspondence Address:
Terry L. Miller
24832 Via San Fernando
Mission Viejo, CA 92692 (US)

(73) Assignee: **Thermocraft Industries**

(21) Appl. No.: **10/877,854**

(22) Filed: **Jun. 25, 2004**

Publication Classification

(51) **Int. Cl.**[7] **B23C 3/32**

(52) **U.S. Cl.** **409/66**

(57) **ABSTRACT**

A thread cutting milling tool comprises a shank with a working portion formed with a recess for receiving a thread cutting insert. The thread cutting insert has one edge formed with a line of thread-form teeth of identical profile. The thread cutting teeth project laterally for cutting engagement with a work-piece while the tool spins about its axis. The tool also orbits within or about a work piece, and in one orbit of the tool in a helical cutting path relative to the work piece a number of complete turns of the screw-thread are formed which is equal to the number of teeth of the insert in engagement with the work-piece. A secondary cutter carried on the thread cutting milling tool provides for formation of a pilot portion or counter bore on the work piece at an end of the screw thread. The pilot portion or counter bore provides for alignment of a threaded member which is to engage the screw thread. Also, the secondary cutter provides for formation of a blunt or scalloped full-thread starting end for the screw thread at the pilot portion. The blunt starting end for the screw thread is robust, resists damage, and resists cross threading.

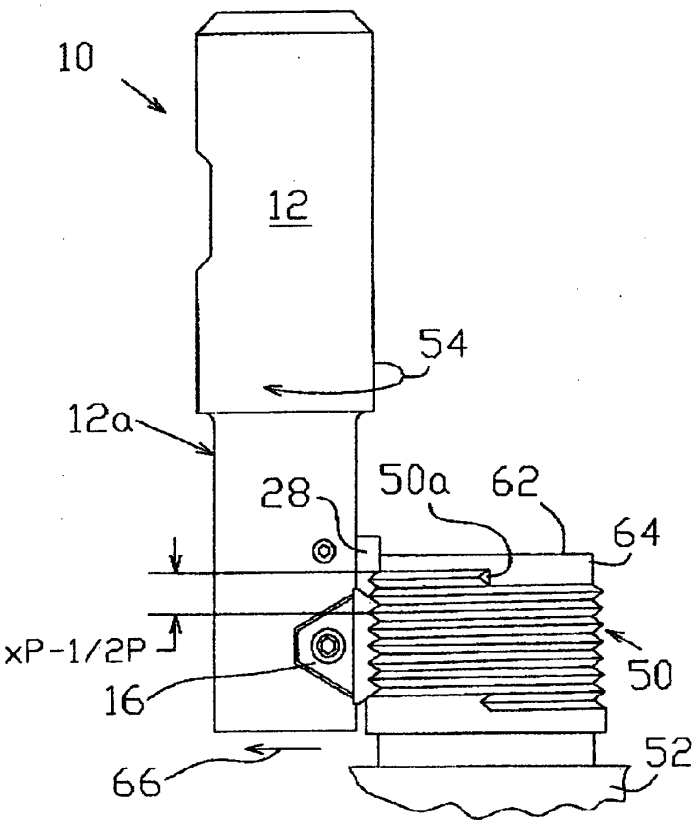

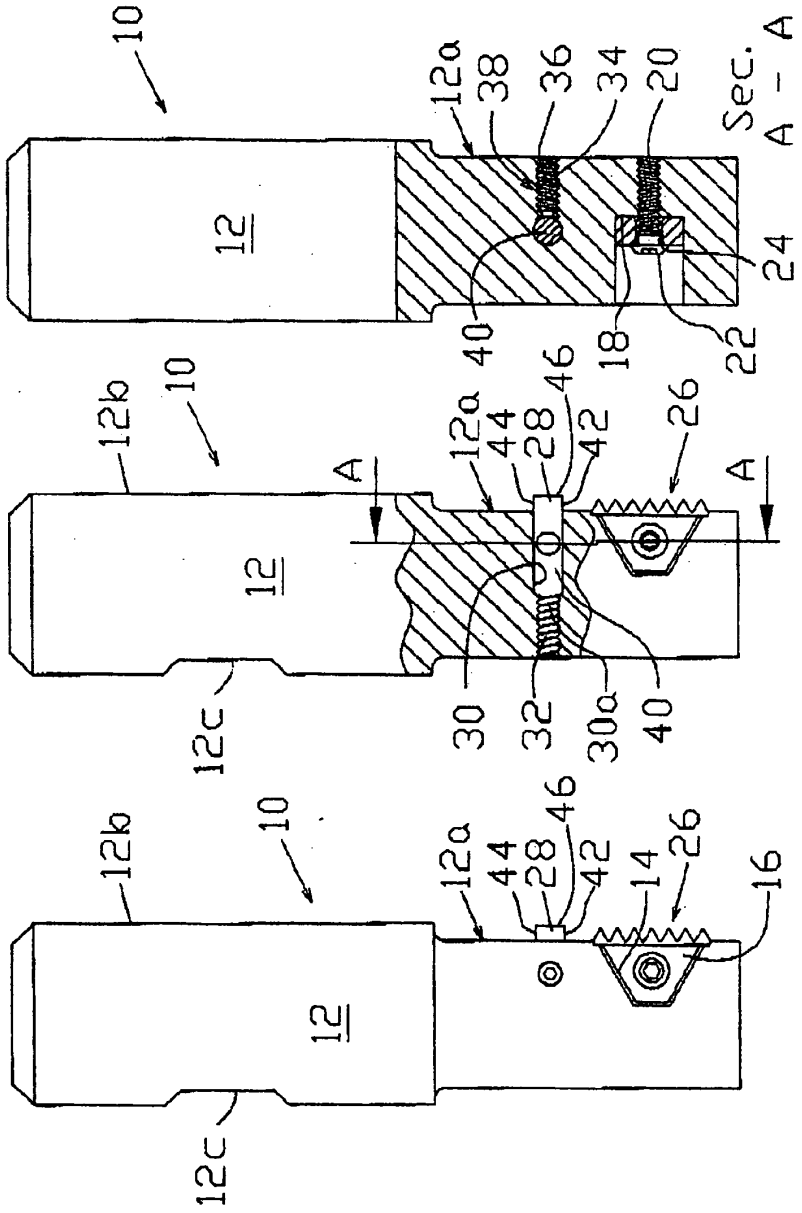

Fig. 1

Fig. 2

Fig. 3

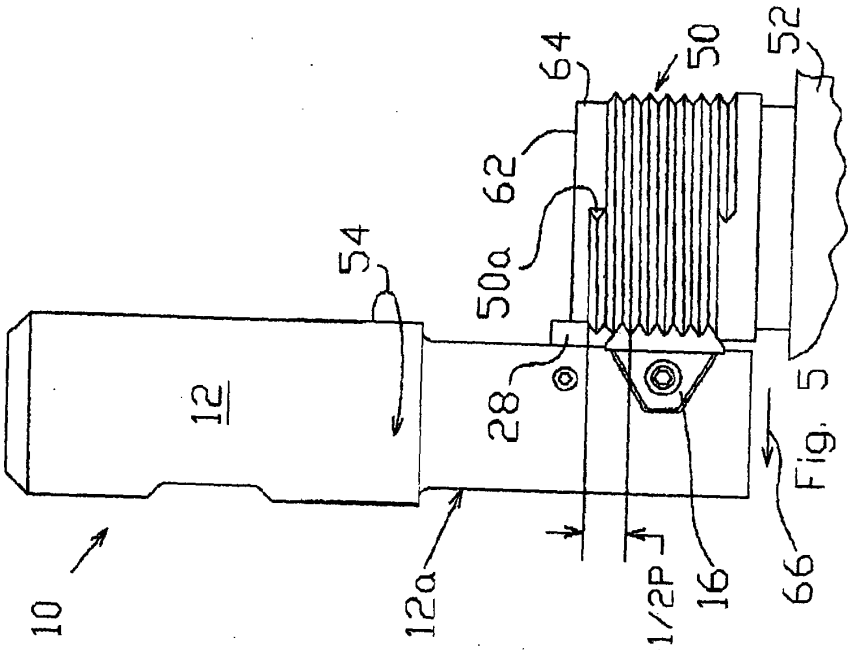
10
12
12a
54
28
50a
62
64
50
52
16
xP-1/2P
66

Fig. 5

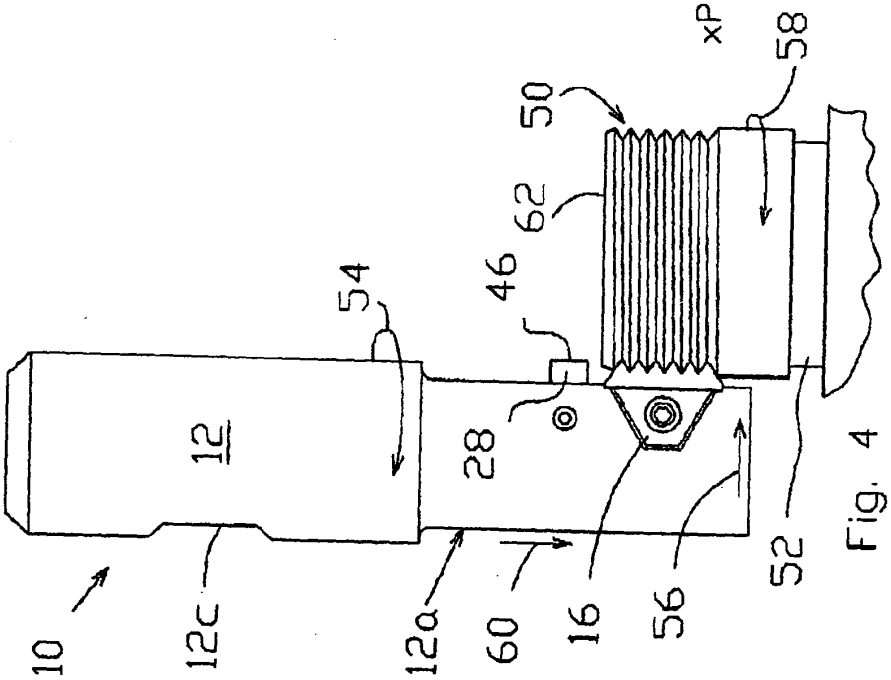
10
12c
12
12a
54
28
46
60
16
56
62
50
58
52

Fig. 4

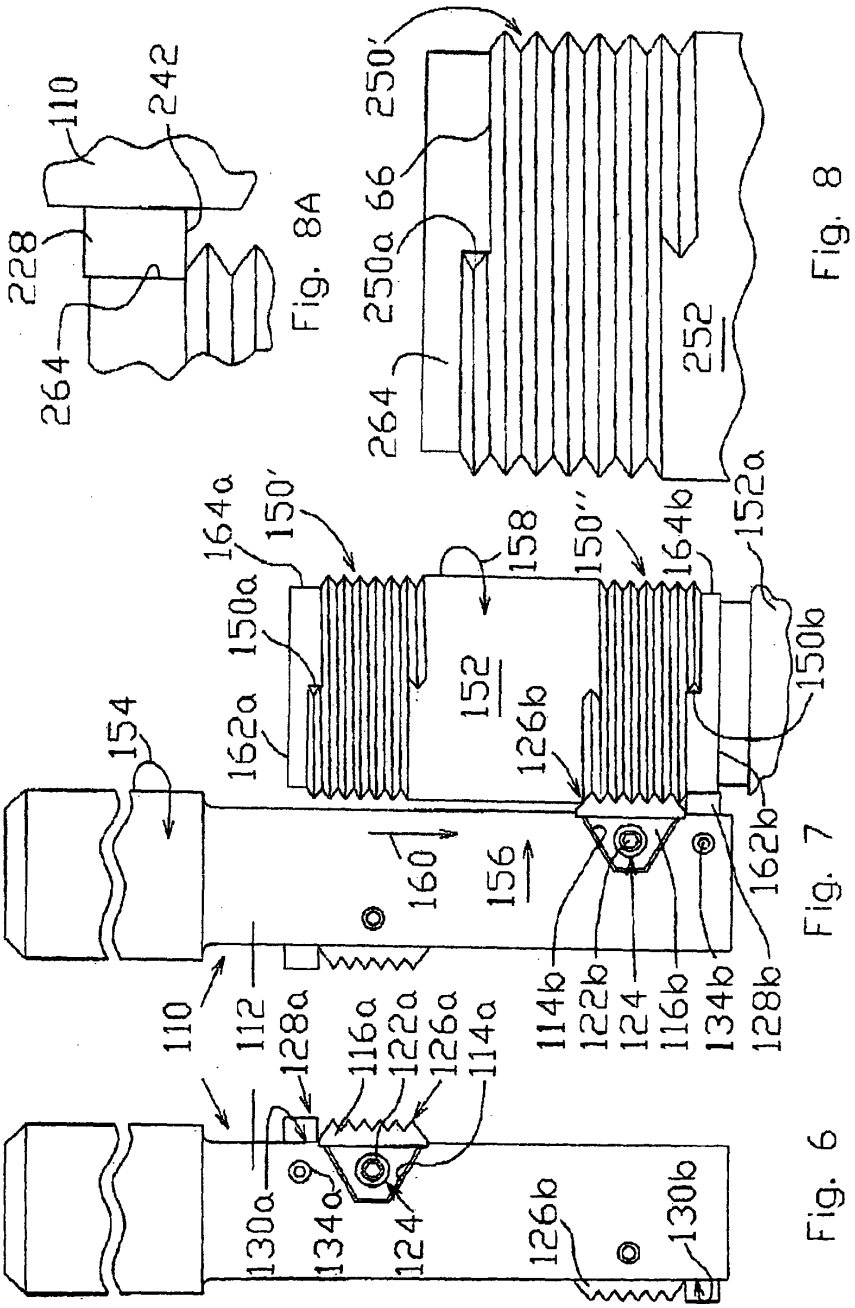
110
242
228
264
Fig. 8A
250'
250a 66
264
252
Fig. 8
164a
150'
150a
162a
154
158
152
126b
150''
164b
152a
150b
162b
160
156
110
112
128a
116a
122a
126a
114a
130a
134a
124
126b
130b
114b
122b
124
116b
134b
128b
Fig. 7
Fig. 6

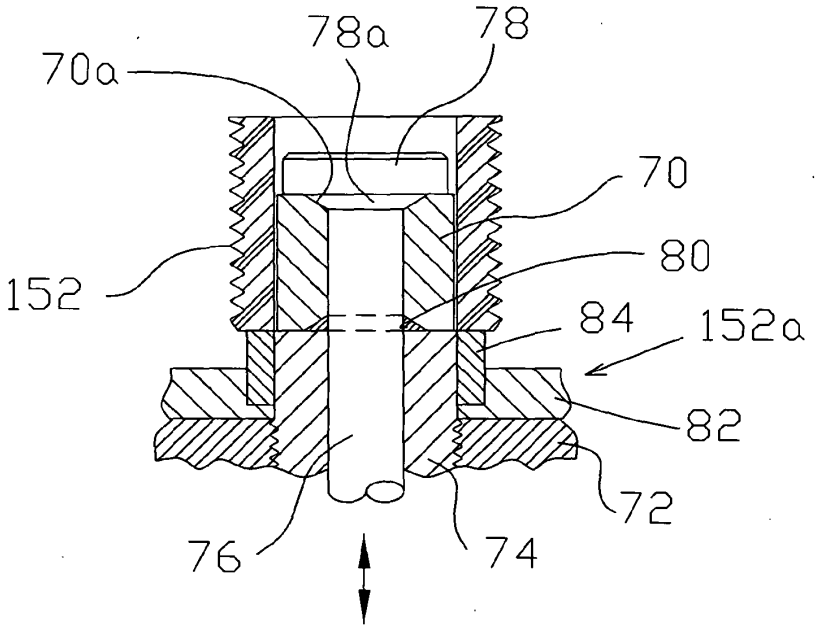
78a
78
70a
70
80
152
84
152a
82
72
76
74

Fig.9

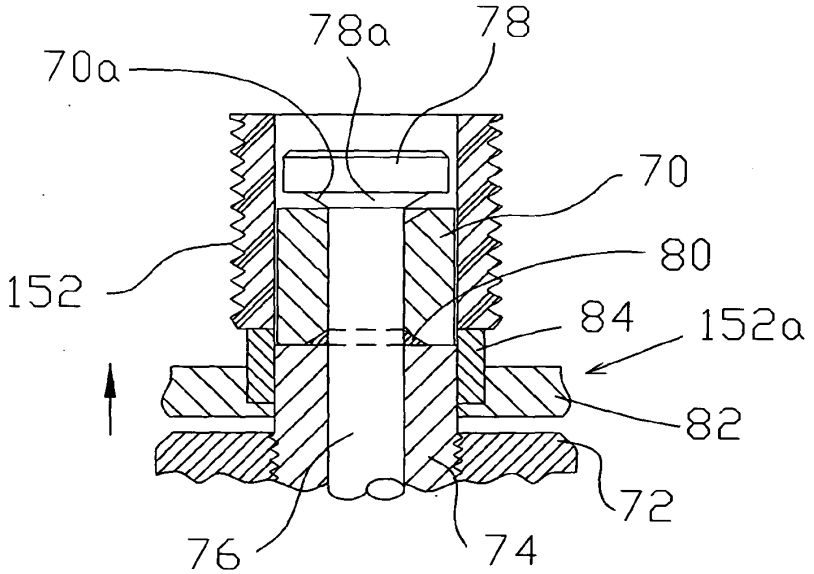
78a
78
70a
70
80
152
84
152a
82
72
76
74

Fig.10

SCREW THREAD CUTTING APPARATUS AND METHOD

BACKGROUND OF THE INVENTION

[0001] 1. Field of the Invention

[0002] This invention concerns the cutting of screw-threads. More particularly, this invention relates to a screw thread cutting apparatus and method for cutting screw threads on a surface, which surface may be either an interior surface (i.e., female screw threads) or exterior (i.e., male screw threads), and which may be a straight cylindrical surface or a tapering surface. Still more particularly, the present invention relates to such a screw thread cutting apparatus and method in which the starting end of the first screw thread is spaced away from an adjacent end of the threaded surface to provide a pilot portion or counter bore portion. Further, the starting end of the first screw thread is blunt or scalloped, so as to provide a jam-resistant start for the screw thread, and to avoid cross threading as well.

[0003] 2. Brief Description of Related Technology

[0004] The use of a screw thread cutting tool including a milling cutter with a shank defining a recess in which is received a replaceable multi-tooth thread cutting insert is well known and conventional. These thread cutting tools are employed in computer numerically controlled (CNC) milling machines to cut both internal and external threads, which threads may be of straight (i.e., cylindrical) shape, or may be tapered (i.e., conical shape). The cutting of such screw threads on or within a work piece conventionally creates a thread form that runs right up to the end of an externally threaded part, or right up to the open end of a bore defined within an internally threaded part.

[0005] Conventional technology of the type described immediately above may be seen in U.S. Pat. Nos. 4,913,604; and 5,098,232

[0006] With the conventional technology, after the performance of an interior or exterior thread cutting operation, if it is desired to provide a starting pilot portion on a work piece having a male screw thread, or a starting counter bore portion within a work piece having a female threaded bore, then in each case the provision of such starting portions requires the performance of a second operation. That is, a second cutting operation must be performed using a tool to form the counter bore or pilot portion on the work piece. Further, when such a starting portion is provided on a male or female threaded part, the starting end of the first thread adjacent to the starting portion is most usually reduced to a thin edge, or to a fine-dimension. That is, at its starting end, the thread form tapers from a full thread shape to essentially a fine edge or toward a zero thickness. Such a fine starting end of a first thread also has a low thread form height, so that it is easily cross threaded in the event that threaded parts are not perfectly aligned when it is attempted to screw them together. That is, such a fine-dimension or thin starting end for a screw thread is fragile and is highly subject to damage. Such damage may cause jamming of threaded parts when assembly of these parts is attempted. Further, a fine-dimension or thin starting end on the first thread tapers to a low height which is easily crossed over by a matching thread and promotes cross threading of screw threaded parts if an attempt is made to assemble them with imperfect alignment. Such cross threading when it occurs can ruin the screw threads, and can possibly make the screw threaded parts unusable as well.

SUMMARY OF THE INVENTION

[0007] An object for this invention is to reduce or eliminate one or more of the deficiencies of the conventional technology.

[0008] Further, an object for this invention is to provide a thread cutting milling tool and method which provides a starting pilot at the start of a male or female thread cut with the tool.

[0009] A further object for this invention is to provide a thread cutting milling tool and method as described above, and in which the starting pilot leads to a starting or first thread having a blunt or scalloped end, such that the starting pilot assists in aligning threaded parts to be assembled, and the blunt starting or first thread is both robust and resistant to damage, and also resists cross threading.

[0010] The present invention provides according to one aspect, a thread cutting tool with a recess in which is received a multi-tooth thread cutting insert formed with a line of teeth which are identical to each other and which have a profile complementary to that of the finished tooth of the screw-thread to be cut. In use of this thread-cutting tool, the tool is mounted on the spindle of a CNC milling machine for rotation about the axis of the spindle and the spindle is simultaneously moved in a path centered on the axis of the surface of the work-piece which is to be screw-threaded. The work-piece is mounted on a stationary work table. The thread cutting tool includes a secondary cutter spaced from and having a selected axial and rotational orientation relative to the thread cutting insert. The secondary cutter is so oriented relative to the thread cutting insert that a starting pilot is cut by the secondary cutter when it engages the work piece. Further, the secondary cutter scallops or blunts the end of the starting or first thread of the finished screw thread which is adjacent to the starting pilot.

[0011] If the inventive thread cutting milling tool is to cut a straight screw thread, then the line of thread cutting teeth of the insert is disposed parallel to the axis of the work-piece on or in which the thread is to be cut, so that where the surface is cylindrical the line of teeth extends parallel to the axis of the shank of the tool. On the other hand, where the surface to be screw threaded is conically inclined (i.e., to make a tapering thread) the line of thread cutting teeth of the thread cutting milling tool is similarly inclined to the axis of the shank of the tool.

[0012] Where the threaded surface is cylindrical, the radius of the cutting tool path as it orbits or gyrates in engagement with the work piece is constant; but where the threaded surface is conically inclined the radius of the cutting tool path (i.e., its orbital and helical path of engagement with the work piece) is varied continuously to follow the desired profile of the tapered thread surface.

[0013] In one aspect the invention provides a thread-cutting tool comprising an elongate shank having a lengthwise axis; a recess or pocket formed in the shank for receiving a multi-tooth thread cutting insert, and a starting thread removal cutter projecting laterally of the thread

cutting tool such that this starting thread removal cutting substantially removes the first thread adjacent to an end of the work piece.

[0014] Removal of the first thread adjacent to an end of the work piece (i.e., adjacent to an end of the thread on an externally threaded part, or adjacent to the opening of a threaded bore within an internally threaded part) to provide a starting portion (i.e., a pilot or counter bore portion) makes alignment and threading engagement of threaded parts with one another very much easier. The removal of the first thread on a externally threaded part provides a cylindrical pilot feature which is first inserted into a threaded bore of an internally threaded part, and guides the externally threaded part toward threading engagement. Similarly, the removal of the first thread of a female threaded part provides a counter bore starting pilot portion, which may receive and assist in aligning a male threaded part.

[0015] Still further, a blunted or scalloped end of the first or starting thread on a threaded part makes jamming of threaded parts upon assembly much more unlikely. Conversely, such a blunted or scalloped starting or first thread on a threaded part or work piece provides a much more robust, damage resistant, and cross threading resistant part.

[0016] Additional objects and advantages of the present invention will be apparent in view of the following description of preferred exemplary embodiments of the invention, taken in conjunction with the following drawing Figures, in which like reference numerals indicate like features throughout the several views.

BRIEF DESCRIPTION OF THE DRAWING FIGURES

[0017] **FIG. 1** is a side elevation view of a thread cutting milling tool embodying the present invention;

[0018] **FIG. 2** is a side elevation view similar to **FIG. 1**, and having a portion of the structure of the thread cutting milling tool broken away for clarity of illustration;

[0019] **FIG. 3** is a side elevation view similar to **FIGS. 1 and 2**, with the view being taken along line **3-3** of **FIG. 2**, so that the viewer is looking perpendicularly to the direction of view seen in **FIG. 2**;

[0020] **FIGS. 4 and 5** are sequential views of the thread cutting milling tool seen in **FIGS. 1-3** being employed to form an external thread on a work piece and to providing a thread starting pilot feature on the free end of the work piece;

[0021] **FIGS. 6 and 7** are respective side elevation views of a thread cutting milling tool according to an alternative embodiment of the present invention, and show opposite sides of the thread cutting milling tool, and **FIG. 7** also shows a step in the method of employing the thread cutting milling tool seen in these Figures to simultaneously form two screw thread portions of the same hand on opposite ends of an elongate work piece, and to also simultaneously form a thread starting pilot feature on each of the thread portions;

[0022] **FIG. 8** is an enlarged fragmentary view of a screw threaded portion of a work piece having screw threads formed in accord with the first or second embodiment of this invention;

[0023] **FIG. 8A** is a still more greatly enlarged fragmentary portion of the screw threaded portion of the work piece seen in **FIG. 9** and is taken adjacent to a starting pilot feature of this work piece; and

[0024] **FIGS. 9 and 10** are respective illustrations of sequential steps in the method of using a thread cutting milling tool according to the present invention in order to form a thread portion adjacent to the upper end of a tubular work piece.

DETAILED DESCRIPTION OF PREFERRED EXEMPLARY EMBODIMENTS

[0025] Referring to **FIGS. 1, 2**, and **3** in conjunction, a thread cutting tool or thread cutting milling tool **10** embodying this present invention includes an elongate shank **12** defining a recess or pocket **14**, in which is received a multi-tooth thread cutting insert **16**. The elongate shank **12** includes a working portion **12***a* on which the pocket **14** is formed, and an engagement portion **12***b* which is chucked by the CNC milling machine. A flat **12***c* provided on the engagement portion **12***b* provides for positive driving of the tool **10** by the CNC milling machine.

[0026] In this particular embodiment of the tool **10**, the pocket **14** and thread cutting insert **16** are each trapezoidal in plan view, as is seen in **FIGS. 1 and 2**. However, the present invention is not limited to use of a thread cutting insert of any particular form or shape. As is seen in **FIG. 3**, the pocket **14** has a flat bottom surface **18**, and a threaded bore **20** opens to this flat bottom surface **18**. A thread cutting insert **16** is received into the recess **14**, and is shaped in plan view (as is seen in **FIGS. 1 and 2**) to seat closely and securely in this pocket **14**. A socket head cap screw **22** of button head configuration is received through a hole **24** defined by the thread cutting insert **16** and threadably engages into the bore **20**. Thus, the insert **16** is securely held in the pocket **14** by cap screw **22**. The insert **16** defines plural radially outwardly extending thread cutting teeth **26**.

[0027] As those ordinarily skilled in the pertinent arts will appreciate, if the tool **10** is intended to cut straight threads (as is tool **10** illustrated in the **FIGS. 1-5**) then the teeth **26** will be arrayed parallel to the axis of the shank **12**. On the other hand, in the event that the thread cutting milling tool **10** is intended to cut tapered threads (i.e., tapered pipe threads, for example) then the pocket **14** is disposed relatively angulated relative to the axis of the shank **12**, so that the cutting insert **16** is similarly arranged to present thread cutting teeth **26** arrayed along a line that is angulated relative to the axis of shank **12**, according to the taper desired to be provided on the tapered threads cut with the tool **10**.

[0028] Those ordinarily skilled in the pertinent arts will also appreciate that the features of the thread cutting milling tool **10** described to this point are conventional, and are within the scope of the conventional technology. Also, those ordinarily skilled will appreciate that the thread cutting milling tool **10** may be employed to cut male or female threads. Because the principles and operation of the thread cutting milling tool **10** are easily transposed from cutting male screw threads to cutting female screw threads, the disclosure below addresses only the cutting of male screw threads. In the case of use of the thread cutting milling tool to cut female screw threads, then the relative positions of the minor and major diameters of the screw thread so cut are

reversed relative to the center axis of the screw thread. Further to the above, it is seen in **FIGS. 1-3** that the thread cutting milling tool **10** also carries a secondary radially projecting cutter **28** spaced a selected distance (i.e., in axial distance, or possibly both in axial and rotational orientation about the axis of shank **12**) from the thread cutting insert **16**. The secondary cutter **28** is disposed in a transverse bore **30** provided in the shank **12**. A portion of the transverse bore **30** provides a screw thread **30***a* and a set screw **32** received into the threaded bore portion **30***a* engages the secondary cutter **28** to allow adjustment of the extent of outward radial projection or protrusion of this secondary cutter **28**. The secondary cutter **28** is secured in a selected position of radially outward protrusion by a lock screw **34**, in the form of a set screw threadably received into an intersecting bore **36** defining a screw thread **38**. That is, an end of the lock screw **34** bears against a shank portion **40** of the secondary cutter **28**.

[**0029**] As is seen in **FIGS. 1 and 2**, the secondary cutter **28** preferably includes a pair of opposite radially extending side cutting edges **42**, **44**. Also, the secondary cutter **28** defines an axially extending cutting edge **46** extending between radially outer terminations of the side cutting edges **42**, **44**. As a result, the radially outwardly protruding portion of the secondary cutter **28** as seen in **FIGS. 1 and 2** has a square or rectangular shape. As **FIG. 3** shows, the shank portion **40** of the secondary cutter **28** may be round in transverse sectional view, although the invention is not so limited.

[**0030**] **FIGS. 4 and 5** illustrate sequential steps in the method of utilizing a CNC milling machine (not seen in the drawing Figures) and a thread cutting milling tool **10** as described by reference to **FIGS. 1-3**, to form an external (i.e., male) screw thread **50** on the outside of a stationary cylindrical work piece **52**. In this respect, **FIGS. 4 and 5** are merely descriptive, and the tool **10** could as well be used to cut a female screw thread within a bore of a work piece. Those ordinarily skilled in the pertinent arts will understand that concepts and teachings of cutting male or female screw threads with a CNC milling machine and by use of a tool **10** embodying this invention are equivalents of one another.

[**0031**] In preparation to this screw thread cutting operation (which is shown in progress in **FIG. 4**), and while the tool **10** is still spaced radially from engagement with the work piece **52**, the tool **10** is spun up or rotated at high speed about its axis by the CNC milling machine, as is indicated on **FIG. 4** by arrow **54**. The tool **10** is then advanced radially into engagement with the work piece **52**, as is indicated by arrow **56**, so that the thread cutting insert **16** engages the work piece **52**. Simultaneously, the CNC milling machine gyrates or orbits the tool **10** about the work piece **52**, while maintaining the desired degree of engagement of the thread cutting insert **16** with the work piece **52**, as is indicated by arrow **58**.

[**0032**] The result is that the tool **10** spins on its axis, gyrates or orbits about the work piece **52** with the thread cutting insert **16** engaging the work piece, and advances axially according to the pitch of screw thread **50** with each gyration. So, the cutting of the screw thread **50** advances from the free end **62** of the work piece along the length of this work piece (as is seen in **FIG. 4**) according to the length of the screw thread **50** desired. In the event that the tool **10** is used to cut a tapered screw thread, in addition to the angulation of the pocket **14** and thread cutting insert **16**, the tool **10** will be moved slightly outward radially as it progresses about (i.e., gyrationally or orbitally) and axially along the work piece **52**. This slight radial movement is coordinated with the taper angle of the screw thread so that the required increase in screw thread diameter from starting end **62** to the finish of the screw thread **50** is achieved.

[**0033**] As **FIG. 5** illustrates, when the desired length of screw thread **50** is nearly finished being cut on work piece **52**, the secondary cutter **28** also engages the work piece **52**. This results from the axial relative motion of the cutter **10** along the work piece **52**, as is indicated by arrow **60**. As the secondary cutter **28** engages the work piece **52**, it removes substantially the first thread form of screw thread **50** (i.e., the first wrap of thread from end edge **62** axially and helically about the work piece **52** through substantially one thread pitch dimension. That is, the secondary cutter **28** removes the screw thread form axially and through substantially **360** degrees of helical motion about the work piece **52**. As is seen in **FIG. 5**, the result is a cylindrical pilot portion **64** on work piece **52**. The axially extending end cutting edge **46** of the secondary cutter **28** is disposed relative to the thread cutting insert **16** so that the pilot portion **64** has a diameter just slightly less than the minor diameter of the screw thread **50** formed by the thread cutting insert **16**.

[**0034**] Further, it is desired that the starting end (or end of the first thread) of screw thread **50** immediately adjacent to pilot portion **64** not start with a fine-edged partial thread, but that this screw thread start with substantially a full thread form. Because the tool **10** carries the secondary cutter **28** in a radially outwardly disposed orientation, and at the completion of a thread cutting operation this tool is disengaged from the work piece **52** by the CNC milling machine effecting a quick radially outward relative motion (indicated by arrow **66**) at the completion of the cutting of screw thread **50**, the starting end **50***a* of screw thread **50** immediately adjacent to pilot portion **64** will inherently have a scalloped or concave blunt end surface which is of substantially full screw thread form. This is the case because the spinning of cutter **10** is very fast in relation to the quick outward radial motion indicated by arrow **66**, so that the cutting surface **46** of cutter **28** effects a radius of cut on the end of the screw thread **50** which is about equal to the effective cutting diameter of the edge **46** of cutter **28** as it spins on tool **10**.

[**0035**] Further, in order to achieve this desired blunt or scalloped full-thread form start **50***a* of the screw thread **50** adjacent to pilot portion **64**, the axial spacing and rotational orientation of the secondary cutter **28** on shank **12** relative to the position of the thread cutting insert **16** is such that an axial spacing of an integer number of thread pitches minus about one-half (½) a thread pitch is disposed axially between the peak of a thread form **50** on work piece **52** formed by the cutting teeth on cutter **16**, and the edge **42** of cutter **28**. That is, any one of the peaks of the thread form **50** on work piece **52** formed by the cutting teeth of the cutter **16** is an integer number of thread pitches minus about one-half a thread pitch dimension axially from the cutting edge **42** of the secondary cutter **28**. This axial relationship is illustrated in **FIG. 4** by the indicated axial spacing arrow and the equation: "xP−½P", in which "x" is an arbitrary integer, and "P" is the screw thread axial pitch dimension.

[0036] Stated differently, the result of the axial and rotational relationship of the thread cutting insert **16** and secondary cutter **28** is that the cutting edge **42** of the cutter **28** is about centered on the valley between adjacent screw threads **50**, or on the minor diameter of the thread form of screw thread **50**, and as the tool **10** advances axially while the cutting of screw thread **50** is completed, this cutting edge **42** and axial edge **46** progressively remove the first wrap of thread form starting from the end edge **62**, forming pilot portion **64**, and progressing helically to the blunt thread end **50***a*. So, as this cutting edge **42** of the secondary cutter **28** removes the first wrap of thread form adjacent to the pilot portion **64**, a scalloped or rather blunt substantially full thread form is maintained at the start **50***a* of the screw thread **50** adjacent to starting pilot portion **64**.

[0037] As described immediately above, such will be the axial relationship of the thread cutting insert **16** and the secondary cutter **28** if they lie along substantially the same longitudinal line of shank **12** (as is seen in **FIGS. 1 and 2**, and as is best illustrated in **FIG. 3**). By careful consideration of **FIG. 3** it can be appreciated that the cutters **16** and **28** are substantially aligned with one another along the length and on the same side of the shank **12**. In the event that the positions of secondary cutter **28** and thread cutting insert **16** are relatively rotated along the shank **12**, then the desired axial spacing between these two cutters in order to form a blunt-start screw thread **50***a* at the beginning of screw thread **50** will be adjusted in view of the rotational orientation of these two cutters. That is, a 180 degree orientation of these cutters relative to one another would require an axial relative spacing of an integer number of thread pitches between the any one of the peaks of the thread form **50** and the cutting edge **42** of the cutter **28**. The important feature is that the cutting edge **42** of the secondary cutter be disposed about centered on the valley of the thread form cut by the thread cutting insert **16**. In this way, the cutting edge **46** will remove the thread form and also scallop the starting end **50***a* of the screw thread **50** adjacent to pilot portion **64**.

[0038] Other possible axial and rotational relative orientations between the thread cutting insert **16** and secondary cutter **28** on shank **12** are, of course, possible. However, the required relationship of the cutters **16** and **28** in order to achieve a blunt, or full-thread start **50***a* for the screw thread **50** at pilot portion **64** is clear in view of the above, and is within the skill of those ordinarily skilled in the art who have now received the advantages of this disclosure.

[0039] **FIGS. 6 and 7** provide side elevation views of the opposite sides of an alternative embodiment of a thread cutting milling tool according to this invention. Because the alternative embodiment of **FIGS. 6 and 7** has many features in common with the first embodiment described in connection with **FIGS. 1-5**, features of the alternative embodiment that are the same as or analogous in structure or function to those described and depicted earlier are referenced with the same numeral used above, and increased by one-hundred (100).

[0040] Viewing now **FIGS. 6 and 7** in conjunction with one another, it is seen that a thread cutting tool or thread cutting milling tool **110** embodying this present invention includes an elongate shank **112** defining a pair of spaced apart recesses or pockets **114***a* and **114***b*. Received into each one of the pair of pockets **114***a* and **114** is a respective one of a pair of multi-tooth thread cutting inserts **116***a* and **116***b*.

[0041] A respective one of a pair of socket head cap screws **122***a* and **122***b* each of button head configuration is received through a hole **124** defined by the thread cutting inserts **116***a* and **116***b*. These cap screws **122***a* and **122***b* and threadably engage into respective threaded bores (not seen in **FIGS. 6 and 7** in order to secure the thread cutting inserts **116***a* and **116***b* in the recesses **114***a* and **114***b*.

[0042] Each of the inserts **116***a* and **116***b* defines plural radially outwardly extending thread cutting teeth **126***a* and **126***b*. As was explained above, the pockets **114***a* and **114***b* may be arranged to present the thread cutting inserts **116***a* and **116***b* to cut either straight or tapered threads.

[0043] The thread cutting milling tool **110** also carries a pair of secondary radially projecting cutters **128***a* and **128***b* each spaced along the shank **112** (i.e., spaced axially and possibly rotationally as well) a selected distance from the adjacent thread cutting insert **116***a* and **116***b*. Each one of the pair of secondary cutters **128***a* and **128***b* are disposed in a respective pair of transverse bores (indicated by arrowed numerals **130***a* and **130***b*) provided in the shank **112**, and are there adjustable for depth in the same way described above with respect to the first embodiment, as well as being secured by a respective set screw or lock screw **134***a* or **134***b*.

[0044] **FIG. 7** also illustrates a step in the method of utilizing a CNC milling machine (not seen in the drawing Figures) and a thread cutting milling tool **110** as described by reference to **FIGS. 6 and 7** to simultaneously form a pair of spaced apart external (i.e., male) screw thread portions **150'** and **150"** on the outside of a stationary cylindrical work piece **152**. In this case, the work piece **152** is tubular and is carried on a collet (not seen in **FIG. 8**) extending upwardly above a base member **152***a*.

[0045] As is seen in **FIG. 7**, the screw threads **150'** and **150"** are formed while the tool **110** is rotated by a CNC milling machine (not seen in the drawing Figures) at high speed about the axis of shank **112** (as is indicated on **FIG. 7** by arrow **154**), and is advanced radially into engagement with the work piece **152** (indicated by arrow **156**) and is simultaneously gyrated or orbited about the work piece **152** (i.e., while maintaining the desired degree of engagement of the thread cutting inserts **116** with the work piece **152**), and is simultaneously advanced axially according to the pitch of screw threads **150'** and **150"** (which have the same pitch and same handedness) with each gyration (indicated by arrows **158** and **160**).

[0046] So, at one end of the work piece **152**, the cutting of the screw thread **150'** or **150"** advances from the respective free end **162***a* or **162***b* of the work piece along the length of this work piece, while at the other end of the work piece, the thread cutting starts at a point intermediate of the ends of the work piece and spaced from the adjacent free end (**162***a* or **162***b*), and progresses toward the respective free end. In other words, viewing **FIG. 7**, the relative axial motion of the thread cutting tool **110** along work piece **152** during thread cutting may be relatively upwardly or downwardly. In each case, screw threads **150'** and **150"** of the same hand (i.e., left handed or right handed screw threads) are simultaneously formed on the opposite end portions of the work piece **152**.

[0047] Also, each screw thread portion **150'** and **150"** is provided with a pilot portion **164***a* and **164***b* by action of the

secondary cutters **128***a* and **128**b. Still further, the starting thread at each pilot portion **164***a* and **164***b* will have a blunt or scalloped full-thread form surface **150***a,* **150***b*. The formation of such a blunt starting thread end **150***a,* **150***b* at one end of the work piece is easy to understand in view of the description of the first embodiment above. That one end is the one having the same sense of tool movement described above with respect to the first embodiment, in which the relative tool movement is from the free end of the work piece toward a screw thread completion spaced from this free end. In the same sense as described above for the first embodiment, the secondary cutter (**128***a* or **128***b*) of the tool **110** will form the pilot portion (**164***a* or **164***b*) and will scallop the starting end of the first screw thread.

[**0048**] However, formation of a blunt starting thread form end **150***a* or **150***b* at the opposite end of the work piece is accomplished by the secondary cutter **128***a* or **128***b* first making a cut into the work piece, and proceeding helically toward the adjacent free end of the work piece to form the pilot portion. Then the thread cutting insert working at that end of the work piece advances also toward the adjacent free end (cutting screw threads as it progresses) and encounters the starting cut made by the secondary cutter. Because of the axial and rotational relationship of the thread cutting inserts and secondary cutters as described above, in this case the screw thread is cut with an alignment such that the starting cut made by the secondary cutter becomes the end of the thread form when the screw thread is cut at that location by the cutter **116**. Again, the secondary cutter **128***a* or **128***b* provides a blunt or scalloped full-thread starting end for the thread form cut by the adjacent cutter **116***a* or **116***b*.

[**0049**] Stated differently, at one end of the work piece **152**, the screw thread adjacent to the end edge **162***a* or **162***b* is cut first, followed by formation of the pilot portion **164** and scalloping of the starting screw thread end. At the other end of the work piece **152**, the pilot portion **162***a* or **162***b* is cut first (while the thread cutting insert is working at some distance from the starting pilot portion), and the thread leading to this pilot portion is formed next, ending at a surface **150***a* or **150***b* of the pilot portion which was cut earlier by the secondary cutter **128***a* or **128***b*. Because the thread cutting inserts and secondary cutters have the desired axial and rotational relationship, the scalloped starting end of the thread form can be cut before or after the cutting of the screw thread.

[**0050**] Still further, it is possible with the thread cutting milling tool **110** of **FIGS. 6 and 7** to simultaneously cut tapered threads of the same hand on opposite ends of a work piece, but with the screw threads so cut having opposite directions of taper. And, the work piece is also provided with a respective pilot portion at which the tapered thread portion starts with a blunt full-thread. This unique combination of functions is possible using a thread cutting milling tool according to the present invention, by selecting the lengths of the thread cutting inserts **116***a* and **116***b* to be substantially equal in length to the length of each screw thread portion **150**' and **150**" minus a single thread pitch dimension. Particularly, the thread cutting inserts can be one thread pitch less in length than the number of tapered screw threads desired to be cut onto a work piece. Thus, the screw thread cutting milling tool **110** will make a single helical orbit about the work piece **152**, with no radial motion to account for screw thread taper. The taper of the screw threads so cut is achieved simply by the angulation of the thread cutting inserts **116***a* and **116***b* on the tool **110**. Further, the secondary cutters **128***a* and **128***b* are rotationally positioned on the shank **112** such as to provide room for both the thread cutting inserts **116***a* and **116***b* and the adjacent secondary cutters **128***a* and **128***b* at each end of the working portion of shank **112**.

[**0051**] Turning now to **FIGS. 8 and 8**A an additional embodiment of the invention is there illustrated. Again, because this embodiment has many features in common with the first two embodiments, features which are the same or which are analogous in structure or function to those depicted and described above are indicated with the same reference numeral used above, and increased by two-hundred (200). Viewing **FIGS. 8 and 8**A, it is seen that a work piece **252** has screw threads **250** cut thereon by the method of this invention and using a tool as described above. However, it will be noted also that the first full wrap of the screw thread **250** has both a blunt starting surface **250***a,* as well as a slight undercut (indicated by arrowed numeral **66**) which extends axially about 0.005 inch from the center of the thread form at its minor diameter and into the next adjacent full thread. This undercut **66** is achieved by having the secondary cutter **228** positioned about 0.005 inch closer to the thread cutting insert **216** than would be indicated by the relationship set out above. That is, instead of the secondary cutter **228** being positioned with the cutting edge **242** at an integer number of thread pitches minus one-half thread pitch, as described above; the secondary cutter **228** is so positioned with an additional 0.005 inch of spacing subtracted from the integer number of thread pitches (minus one-half thread pitch) which space the thread cutting insert (not seen in the drawing Figures) from secondary cutter **228**. Thus, the secondary cutter **228** fully removes the thread form radius which is formed at the minor diameter of the screw thread **250** by the thread cutting insert. That is, a close consideration of standard thread forms will reveal that the minor diameter is defined not by a sharp angular intersection of adjacent thread surfaces, but by a blending radius. This blending radius is removed by the embodiment of **FIGS. 8 and 8**A in the pilot portion **264** and up to the blunt starting end **250***a*. As a result, ease of assembly of the work piece **250** with another screw threaded part is better assured.

[**0052**] Turning now to **FIGS. 9 and 10** in conjunction with one another, a fixture **152***a* (as was alluded to above) and including an expansible collet structure **70** is carried by a base plate **72** having a cylindrical bushing member **74** extending upwardly on the base plate. The bushing **74** guides a draw bolt **76** which is forcefully reciprocable relative to the base plate, as is indicated by the associated double headed arrow on **FIG. 9**. The draw bolt **76** includes a head portion **78** having a forcing cone section **78***a* on its underside, and bearing against matching conical surfaces **70***a* of the collet **70**. At the lower end of the collet **70**, opposed conical surfaces **70***a* are engaged by a forcing washer **80**, which surrounds the pull bolt **76** and rests atop of the bushing **74**. A stripper plate **82** is carried above the base plate **72**, and carries a tubular stripper boss **84** surrounding the bushing **74**. The stripper plate **82** and stripper boss **84** are reciprocable vertically relative to the base plate **72**, as is indicated by the associated double headed arrow of **FIG. 9**. In the relative positions of the stripper plate **82** and base plate **72** illustrated in FIG. **9**, the top surfaces of the bushing **74** and of the tubular stripper boss are coextensive.

Also as is seen in **FIG. 9**, the top surface of the bushing **74** provides a surface supporting the collet **70**, while the top surface of the stripper boss **84** provides a surface for supporting a work piece **152**.

[**0053**] As is indicated in **FIG. 9**, when the stripper plate **82** is in engagement with the base plate **72** and a work piece **152** is engaged over the collet **70**, a forceful downward movement of the draw bolt **76** expands the collet **70** and locks the work piece **152** in place. As thus locked in place, the work piece **152** may be screw threaded on its radially outer surfaces, as was explained above with respect to the use of the thread cutting tool **10**. In **FIG. 9**, this screw thread cutting operation is illustrated as already having taken place on the work piece **152**.

[**0054**] Now, on the other hand, at the completion of a screw thread cutting operation, as is indicated in **FIG. 10**, an upward relative motion of the draw bolt **76** allows the collet **70** to contract radially a small amount, which is enough to release the locking hold of the collet **70** on the work piece **152**. Subsequently, the stripper plate **82** is forcefully moved slightly upwardly relative to the base plate **72**, so that the work piece **152** is raised a fraction of the length of the collet member **70**, in preparation for the work piece **152** being removed from the fixture **152***a*.

[**0055**] While the invention has been described with reference to the foregoing preferred exemplary embodiments, many changes and modifications may be made thereto which fall within the scope of the appended claims.

I claim:

1. A thread cutting milling tool comprising an elongate rotary shank defining a longitudinal axis and carrying a radially projecting thread cutting insert for rotationally engaging a work piece along a helical orbital path in order to cut screw threads thereon, the screw threads including a thread form helically wrapping about an axis of said work piece, said shank further carrying a secondary radially extending cutter spaced from said thread cutting insert for also rotationally engaging the work piece along a helical orbital path.

2. The thread cutting milling tool of claim 1 wherein said secondary cutter engages the work piece along a helical orbital path corresponding to said thread form in order to substantially remove at least a partial wrap of said thread form from said work piece.

3. The thread cutting milling tool of claim 2 wherein said substantial removal of at least a partial wrap of said thread form from said work piece is positioned at an end of the screw threads cut by said thread cutting insert, and provides an axially and helically extending non-threaded portion on the work piece.

4. A thread cutting milling tool according to claim 1 in which said thread cutting insert and said secondary cutter are spaced apart on said elongate rotary shank so as to have an effective linear spacing along the axis of said shank which is equal to an integer number of thread pitch dimensions minus one-half a thread pitch dimension.

5. A thread cutting milling tool according to claim 5 in which said thread cutting insert and said secondary cutter are spaced apart on said elongate rotary shank so as to have an effective linear spacing along the axis of said shank which is equal to an integer number of thread pitch dimensions minus one-half a thread pitch dimension and also minus a selected additional dimension.

6. A thread cutting milling tool according to claim 5 in which said selected additional dimension is in the range from about 0.002 inch to about 0.010 inch.

7. A thread cutting milling tool according to claim 1 in which said thread cutting insert includes a plurality of axially arrayed thread cutting teeth complementary to said thread form.

8. A thread cutting milling tool according to claim 7 wherein said plurality of thread cutting teeth are arrayed in an axially extending line parallel to the longitudinal axis of said shank, whereby said thread cutting milling tool is configured to cut straight screw threads on the work piece.

9. A thread cutting milling tool according to claim 7 wherein said plurality of thread cutting teeth are arrayed in an axially extending line at a selected angle relative to the longitudinal axis of said shank, whereby said thread-milling tool is configured to cut tapered screw threads of said selected angle on the work piece.

10. A thread cutting milling tool according to claim 1 wherein said secondary cutter defines a radially outer axially extending cutting edge, and said secondary cutter is arranged on said shank in axially and rotationally spaced relationship to said thread cutting insert so that said radially outer cutting edge is radially and axially congruent with the location the helical screw thread form on the work piece, whereby as said thread cutting insert rotationally engages said work piece along a helical orbital path and relatively moves helically to cut said screw threads thereon, said secondary cutter likewise engages said work piece and moves along a corresponding helical orbital path congruent with the path of said screw thread form on said work piece to there removes a portion of said work piece thus to provide a non-threaded cylindrical portion on said work piece.

11. A thread cutting milling tool according to claim 10 wherein said secondary cutter forms a scalloped starting thread end surface on said thread form adjacent to said pilot portion, whereby a starting thread end on the work piece is a full thread form which is resistant to damage and cross threading.

12. A thread cutting milling tool according to claim 10 wherein said axially extending cutting edge of said secondary cutter is disposed relative to said shank so as to form said non-threaded cylindrical portion with a diameter corresponding to one of: the minor diameter of a male screw thread, or the major diameter of a female screw thread cut by said thread cutting insert.

13. A thread cutting milling tool according to claim 1 wherein said shank includes a pair of recesses, each recess receiving a respective radially projecting thread cutting insert for engagement with a work piece, and said shank further carries a pair of secondary cutters, each one of said pair of secondary cutters being associated in selected spaced relationship with one of said pair of thread cutting inserts so as to engage a work piece at locations along a respective helical orbital path corresponding to respective screw thread portions defined by a respective one of said pair of thread cutting inserts, said pair of secondary cutters engaging said work piece so as to helically remove portions of said work piece at respective helical thread form paths corresponding to the associated thread cutting insert, thereby to provide a pair of non-threaded portions each adjacent to a respective

end of the work piece and to each of the pair of screw thread portions cut on said work piece by said pair of thread cutting inserts.

14. A method of utilizing a single milling tool in a single operation to simultaneously provide on a work piece both a cut screw thread and a threadless portion adjacent to one end of the cut screw thread, while also providing a blunt starting thread of full-thread-form at said threadless portion, said method including steps of:

providing a thread cutting milling tool having an elongate rotational shank carrying a radially extending thread cutting insert;

providing said thread cutting milling tool with a secondary radially extending cutter in selected spaced relationship with said thread cutting insert so as to engage and remove a portion of said work piece along a helical path corresponding with a helical thread form path corresponding with said thread cutting insert.

15. The method of claim 14 further including the step of spacing apart said thread cutting insert and said secondary cutter on said elongate rotary shank so as to effect an equivalent linear spacing along the axis of said shank between a thread form cutting edge of the thread cutting insert an adjacent edge of said secondary cutter which is substantially equal to an integer number of thread pitch dimensions minus one-half a thread pitch dimension.

16. The method of claim 15 further including the step of spacing apart said thread cutting insert and said secondary cutter on said elongate rotary shank so as to effect an equivalent linear spacing along the axis of said shank between a thread form cutting edge of the thread cutting insert an adjacent edge of said secondary cutter which is substantially equal to an integer number of thread pitch dimensions minus one-half a thread pitch dimension, and also minus an additional selected dimension.

17. The method of claim 16 wherein said additional selected dimension is selected to be in the range from about 0.002 inch to about 0.010 inch.

18. The method of claim 14 further including the step of disposing said thread cutting insert on said shank with a plurality of thread cutting edges thereof arranged in an axially extending straight line disposed parallel to the longitudinal axis of said shank, whereby said thread cutting milling tool is configured to cut straight screw threads on a work piece.

19. The method of claim 14 further including the step of disposing said thread cutting insert on said shank with a plurality of thread cutting edges thereof arrange in an axially extending straight line disposed at a selected angle relative to the longitudinal axis of said shank, whereby said thread cutting milling tool is configured to cut tapered screw threads on a work piece.

20. A method of simultaneously cutting screw threads on a work piece, cutting a threadless portion adjacent an end of the screw threads, and forming a blunt starting end of the screw threads at said threadless portion, said method including steps of:

providing a thread cutting milling tool comprising an elongate rotary shank defining a longitudinal axis and a working end portion;

defining a recess on said working end portion for receiving a radially projecting thread cutting insert

providing features on said working shank portion for also carrying a secondary radially projecting cutter spaced from said thread cutting insert;

spinning said thread cutting tool while simultaneously moving said thread cutting tool in a helical orbital path relative to the work piece to engage said thread cutting inset with the work piece to cut screw threads thereon along a helical thread form path;

while spinning and moving said thread cutting milling tool in said helical orbital path relative to the work piece also engaging said secondary cutter with the work piece along a respective helical orbital path corresponding to said helical thread form path to engage the work piece and remove a selected part thereof.

21. A fixture for use in milling screw threads on an upstanding elongate tubular work piece, said fixture comprising:

a base plate having an upstanding tubular boss thereon;

a tubular expansible collet member resting upon said upstanding tubular boss;

a draw bolt extending through said tubular expansible collet member and through said upstanding tubular boss, said draw bolt including a head portion forcefully engageable with an upper end of said tubular expansible collet member to effect expansion thereof;

a stripper plate disposed above said base plate, said stripper plate including a bore surrounding said upstanding tubular boss, and said stripper plate also providing a surface circumscribing said upstanding tubular boss and upon which said work piece rests;

a moving device for vertically reciprocating said stripper plate from a first position most closely disposed to said base plate and in which said work piece is fully engaged upon said tubular expansible collet, and to a second position spaced from said base plate above said first position and in which said work piece is engaged by said surface to be elevated above full engagement with said tubular expansible collet so as to be easily removable there from.

* * * * *