US006488681B2

(12) **United States Patent**
Martin et al.

(10) **Patent No.: US 6,488,681 B2**
(45) **Date of Patent: Dec. 3, 2002**

(54) **PEDICLE SCREW ASSEMBLY**

(75) Inventors: **Greg Martin**, New York, NY (US); **Yves Crozet**, Ramsey; **William J. Kelly**, Montville, both of NJ (US)

(73) Assignee: **Stryker Spine S.A.** (FR)

(*) Notice: Subject to any disclaimer, the term of this patent is extended or adjusted under 35 U.S.C. 154(b) by 0 days.

(21) Appl. No.: **09/755,846**

(22) Filed: **Jan. 5, 2001**

(65) **Prior Publication Data**

US 2002/0091386 A1 Jul. 11, 2002

(51) **Int. Cl.**[7] **A61B 17/86**
(52) **U.S. Cl.** **606/61**; 606/73
(58) **Field of Search** 606/61, 69, 60, 606/70, 71, 72, 73, 78, 53; 411/433, 911

(56) **References Cited**

U.S. PATENT DOCUMENTS

5,129,388	A		7/1992	Vignaud et al.	606/61
5,246,442	A		9/1993	Ashman et al.	606/61
5,253,406	A	*	10/1993	Shere et al.	29/240
5,466,237	A	*	11/1995	Byrd, III et al.	606/61
5,476,464	A		12/1995	Metz-Stavenhagen et al.	606/61
5,669,911	A		9/1997	Errico et al.	606/61
5,672,176	A		9/1997	Biedermann et al.	606/61
5,733,286	A		3/1998	Errico et al.	606/61
5,882,350	A	*	3/1999	Ralph et al.	606/61
5,885,286	A		3/1999	Sherman et al.	606/61
5,946,988	A	*	9/1999	Metz-Stavenhagen	81/111
5,951,553	A		9/1999	Betz et al.	606/61
6,030,389	A		2/2000	Wagner et al.	606/61
6,053,917	A	*	4/2000	Sherman et al.	606/61
6,063,090	A		5/2000	Schlapfer	606/61
6,074,391	A	*	6/2000	Metz-Stavenhagen	606/61
6,077,262	A		6/2000	Schlapfer et al.	606/61
6,090,110	A		7/2000	Metz-Stavenhagen	606/61
6,090,111	A		7/2000	Nicholas	606/61
6,113,601	A	*	9/2000	Tatar	606/61
6,280,442	B1	*	8/2001	Barker et al.	606/60

FOREIGN PATENT DOCUMENTS

DE 195 42 116 A1 11/1995

* cited by examiner

Primary Examiner—Pedro Philogene
(74) *Attorney, Agent, or Firm*—Lerner, David, Littenberg, Krumholz & Mentlik, LLP

(57) **ABSTRACT**

A stabilizing assembly includes a fastener having an upper end and a lower end, a head at the upper end, and at least one anchoring element extending between the upper and lower ends. The head includes a center, an underside including a first radial surface and a top side including a second radial surface. The first radial surface of the head defines a first radius from the center of the head and the second radial surface defines a second radius from the center of the head, the first radius being greater than the second radius. The assembly also includes a coupling element having an upper end and a lower end, the coupling element including a rod receiving opening extending from the upper end thereof being adapted to receive a stabilizing rod, a bore extending through the lower end of the coupling element for receiving the fastener, and a conical-shaped seat adjacent the lower end of the coupling element adapted to engage the first radial surface of the head when the fastener is positioned in the bore. A locking element associated with the coupling element is adapted to apply a force upon a stabilizing rod positioned in the rod receiving opening. As a force is applied to a stabilizing rod, the rod in turn, engages the second radial surface at the top side of the head for forcing the underside of the head against the conical-shaped seat of the coupling element so as to prevent further pivotal and rotational movement of the fastener and the coupling element relative to one another. In certain embodiments, the fastener may be a screw fastener having screw threads. In other embodiments, the fastener may include a hook.

43 Claims, 11 Drawing Sheets

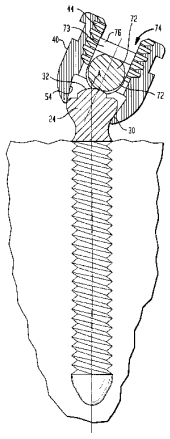

FIG. 1

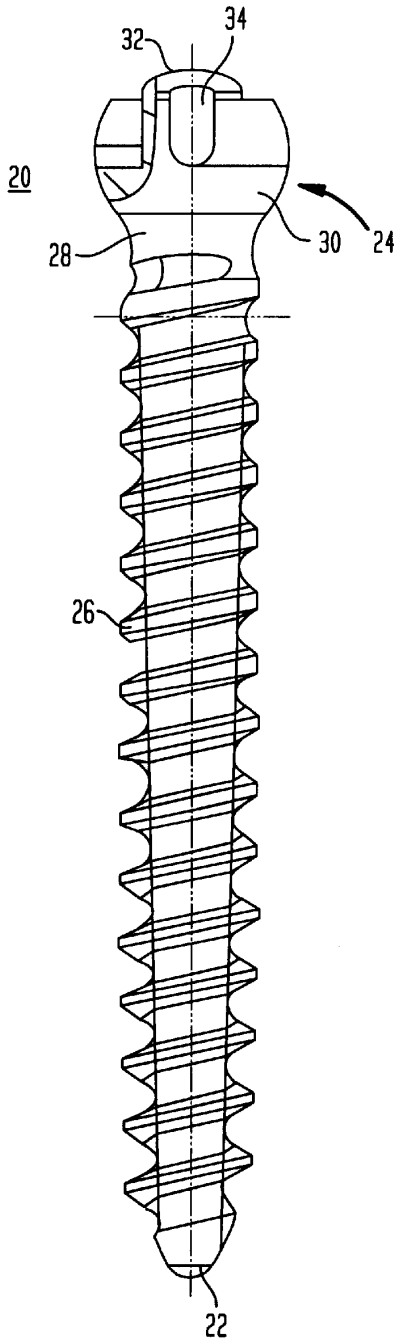

FIG. 2

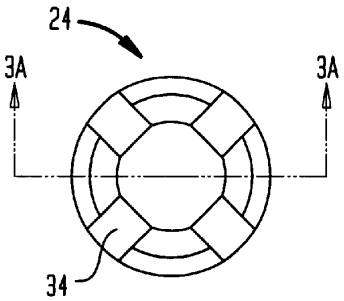

FIG. 3A

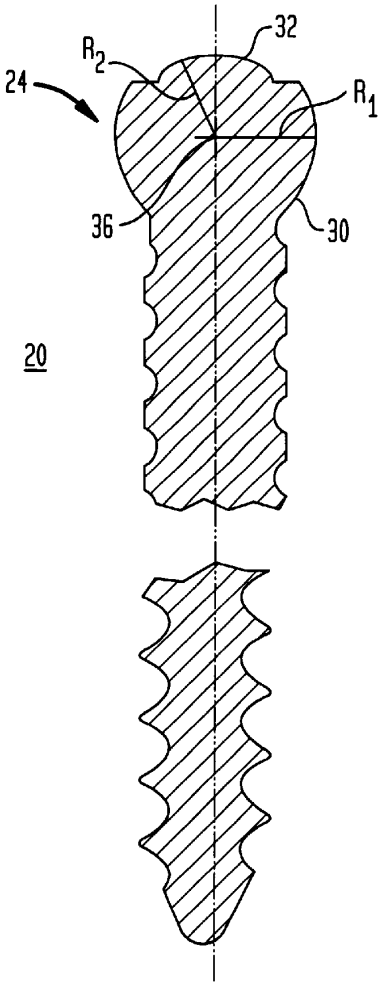

FIG. 3B

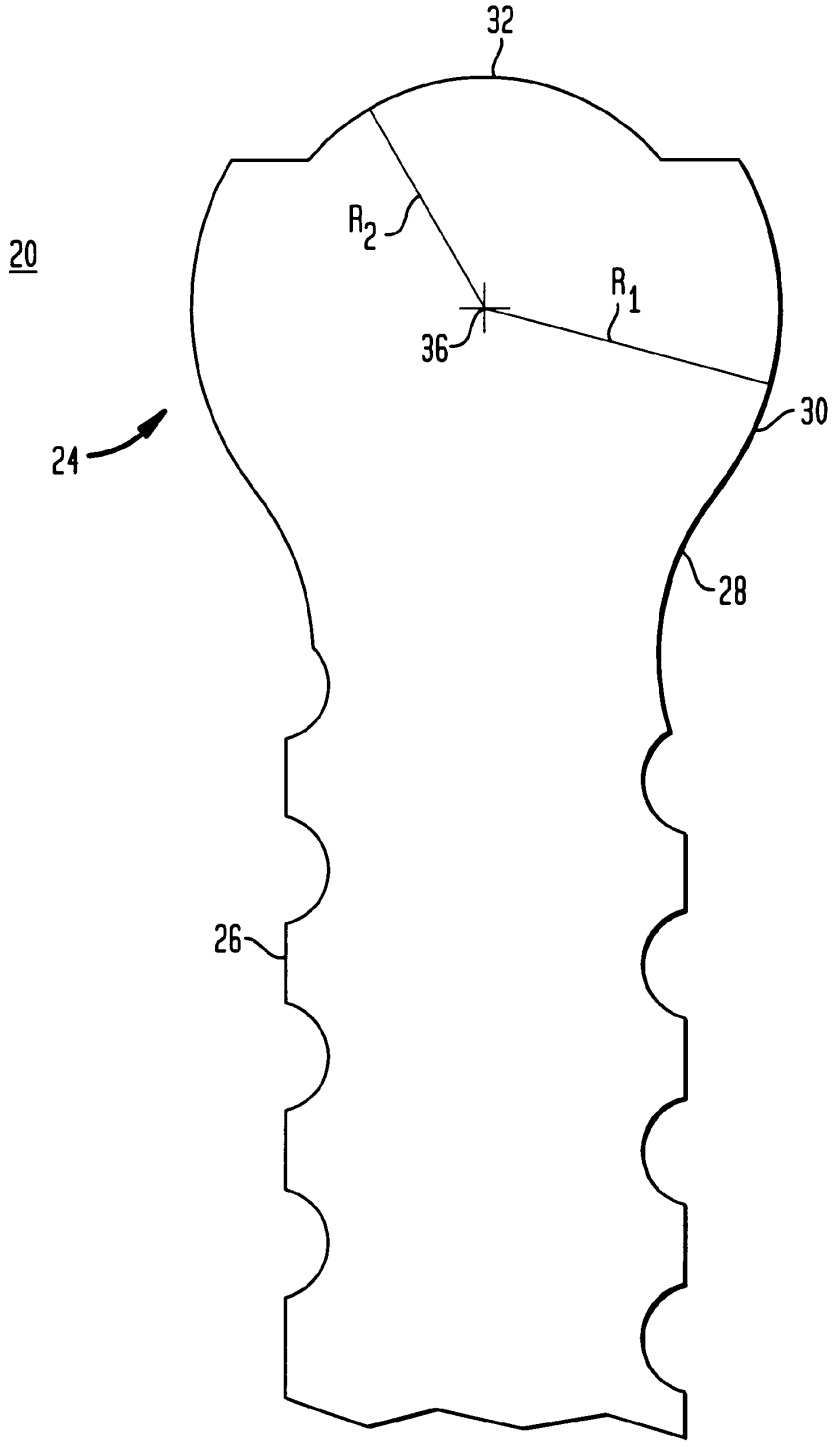

FIG. 4

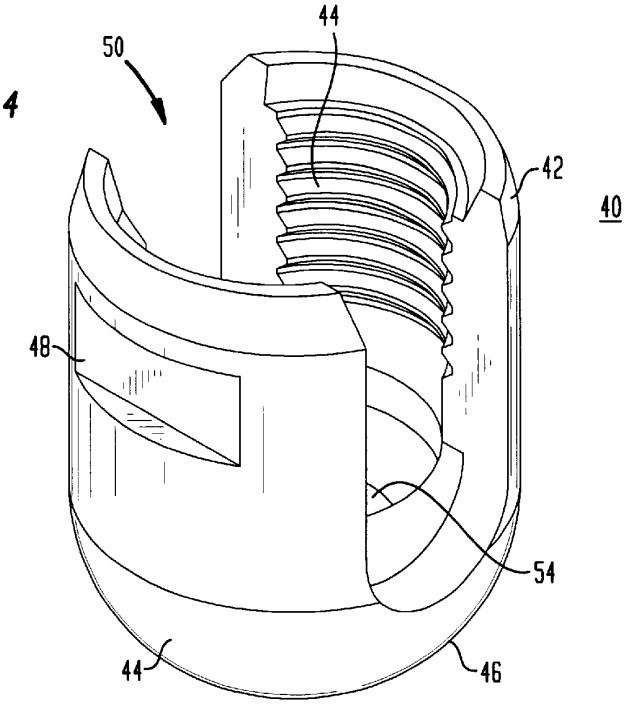

FIG. 5

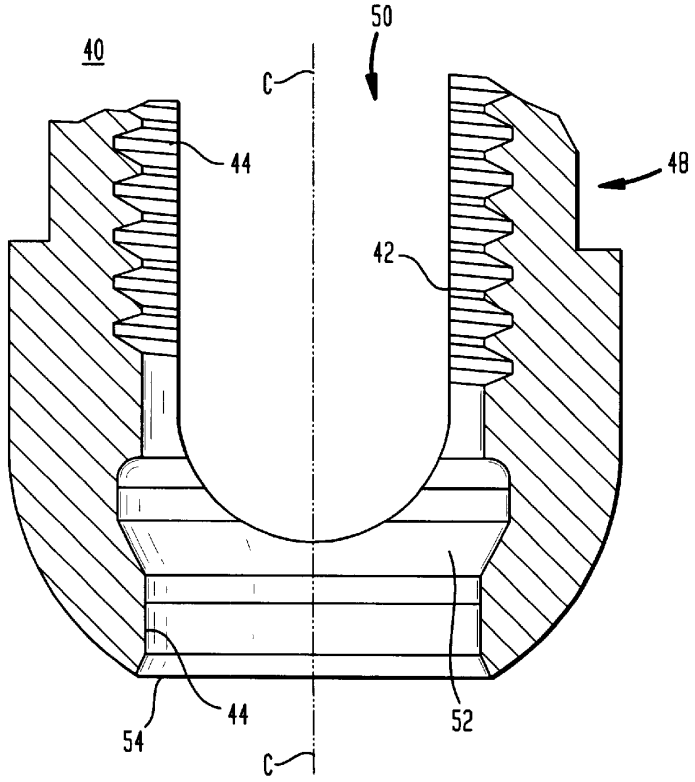

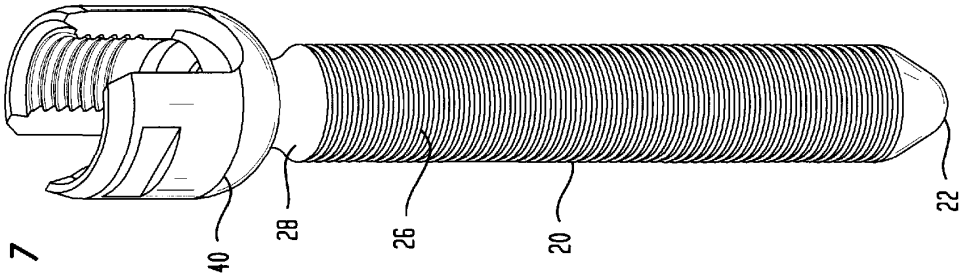

FIG. 7

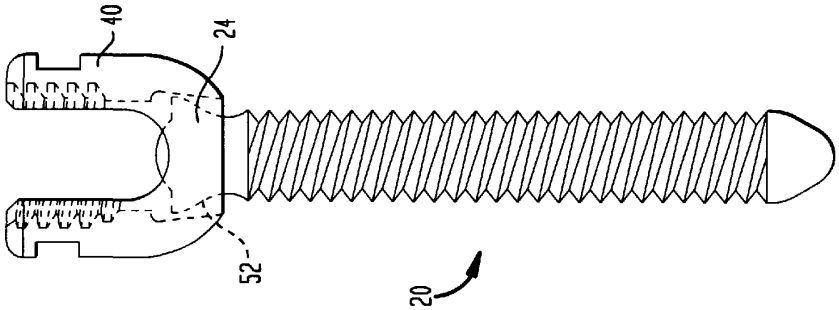

FIG. 6B

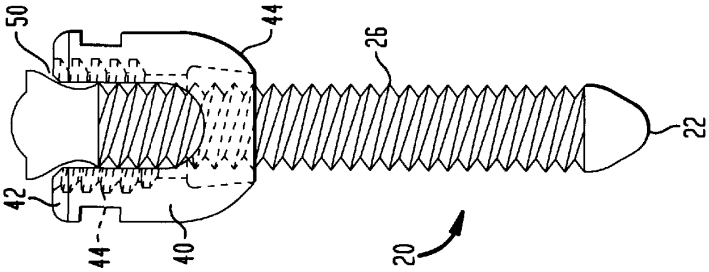

FIG. 6A

FIG. 8

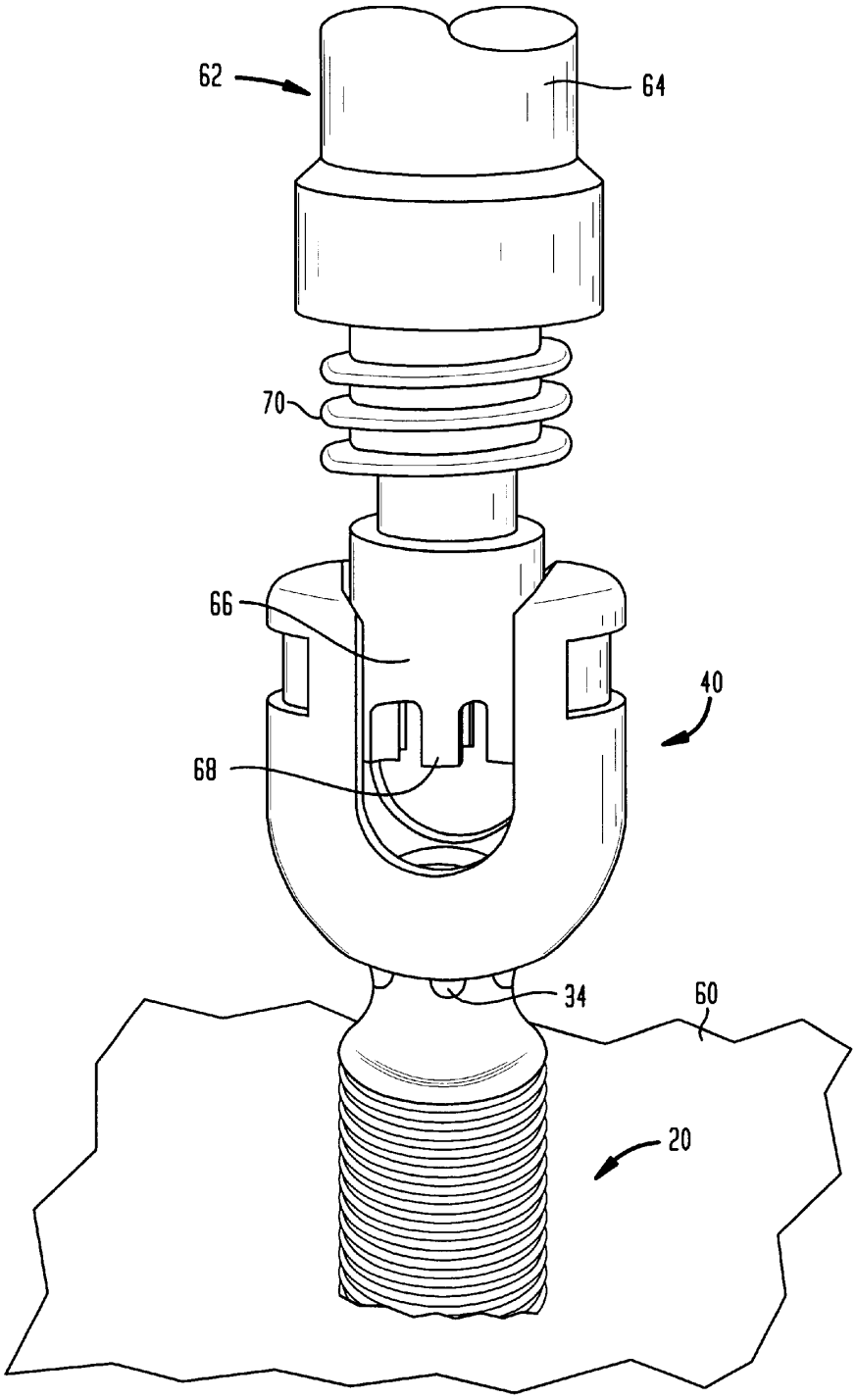

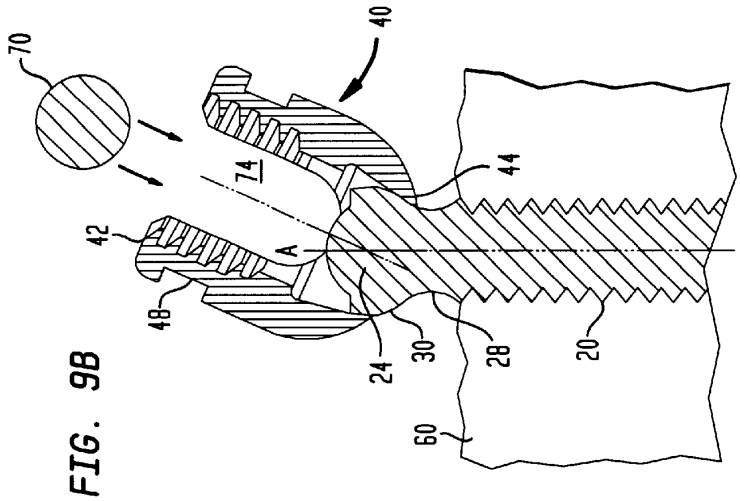

FIG. 9B

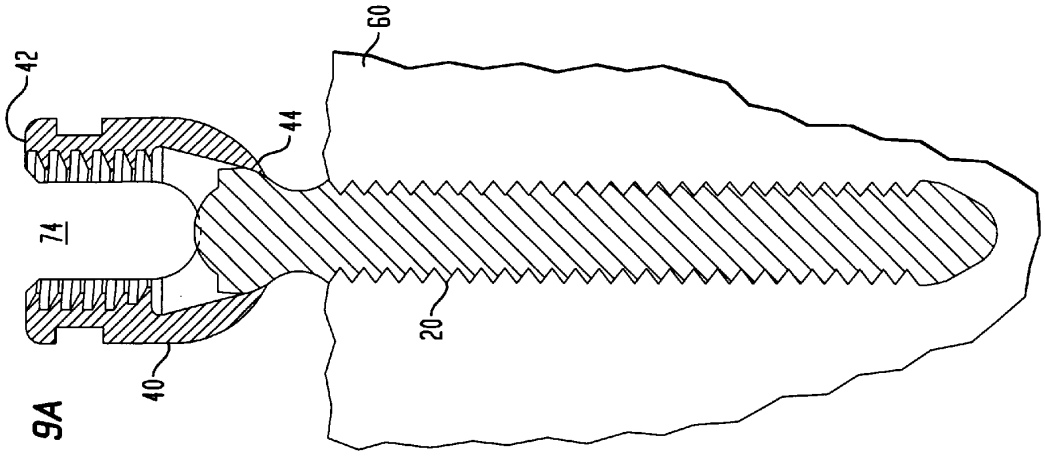

FIG. 9A

FIG. 9C

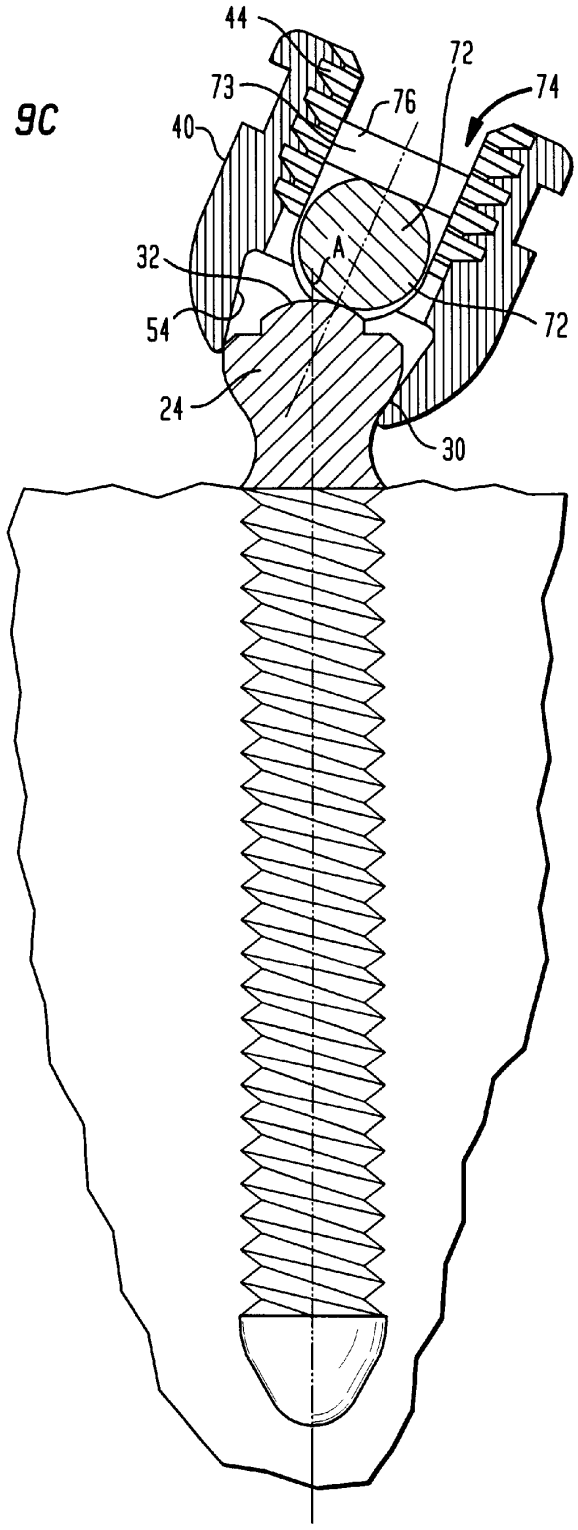

FIG. 10

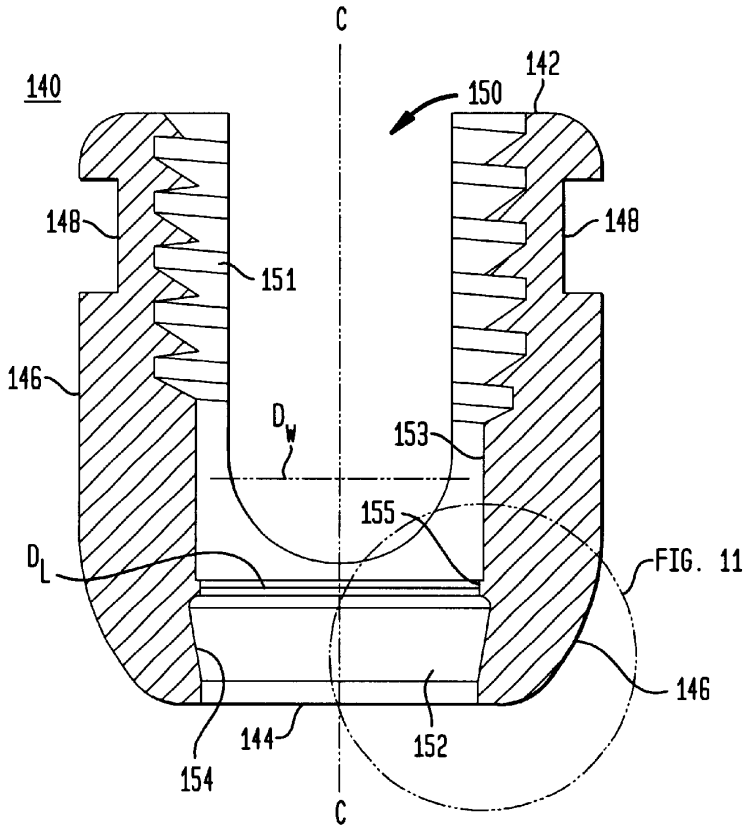
C
140
142
150
148
148
151
146
D_W
153
155
D_L
FIG. 11
146
144
152
154
C

FIG. 11

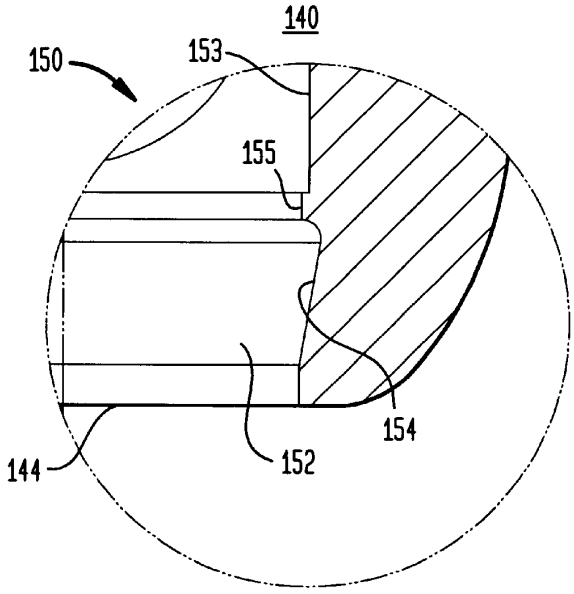
140
150
153
155
154
144
152

FIG. 12

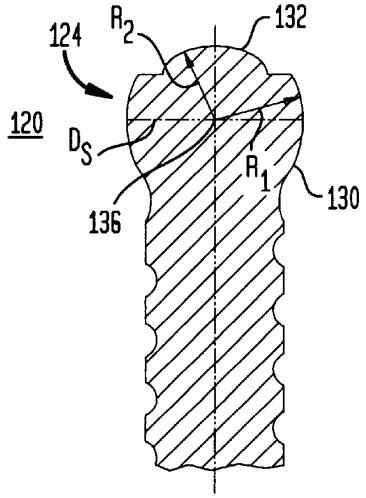

FIG. 18

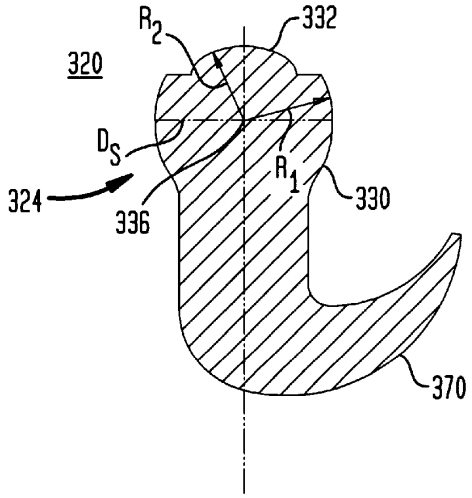

FIG. 13A

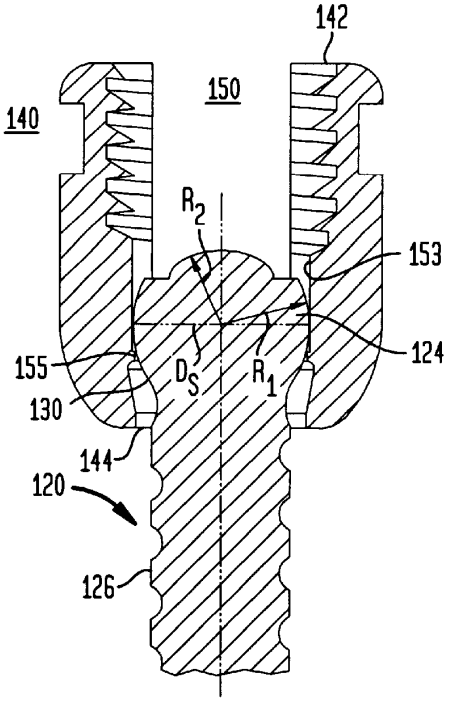

FIG. 13B

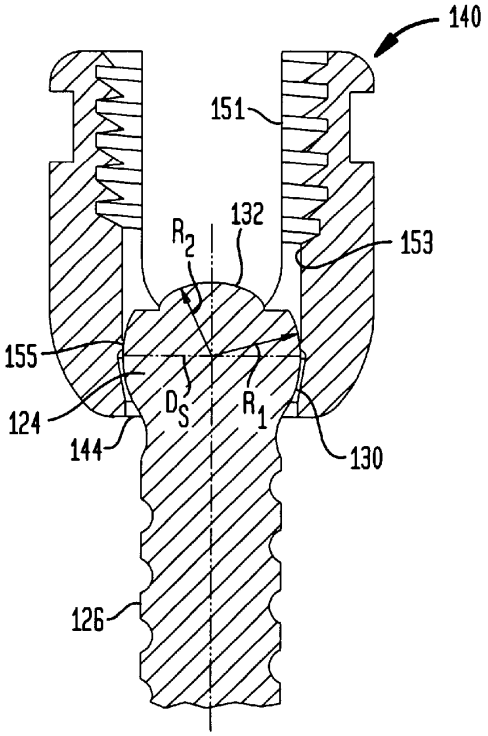

FIG. 14

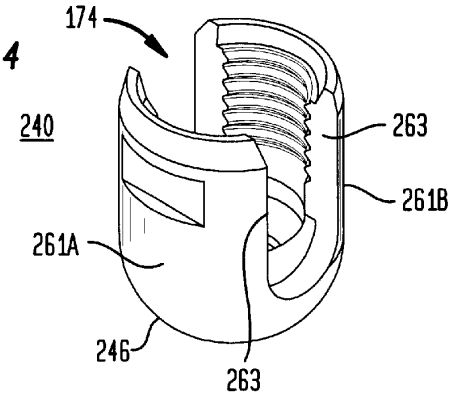

FIG. 15

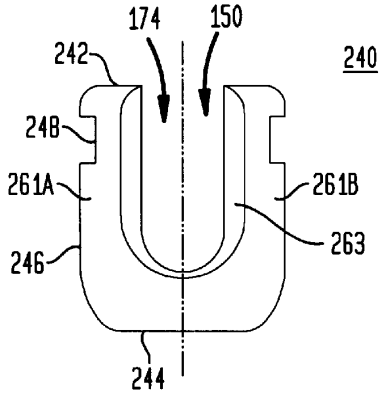

FIG. 16

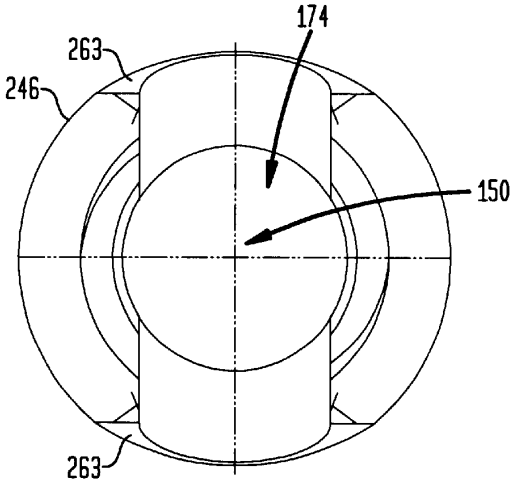

FIG. 17

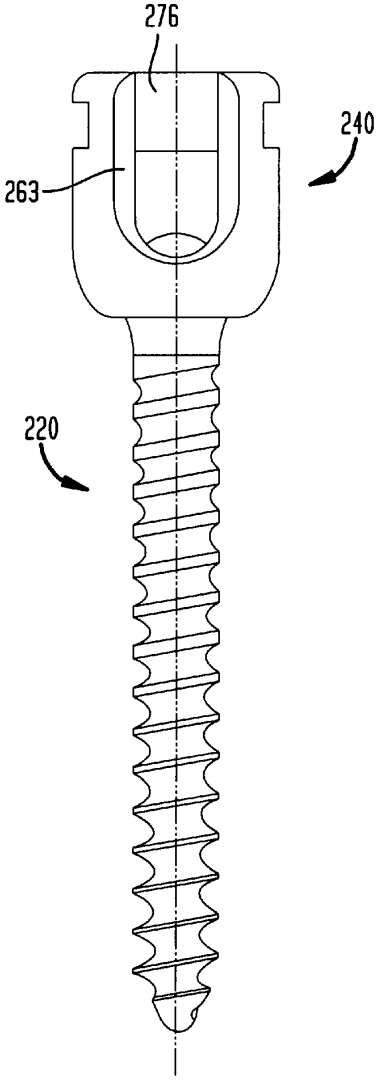

FIG. 19

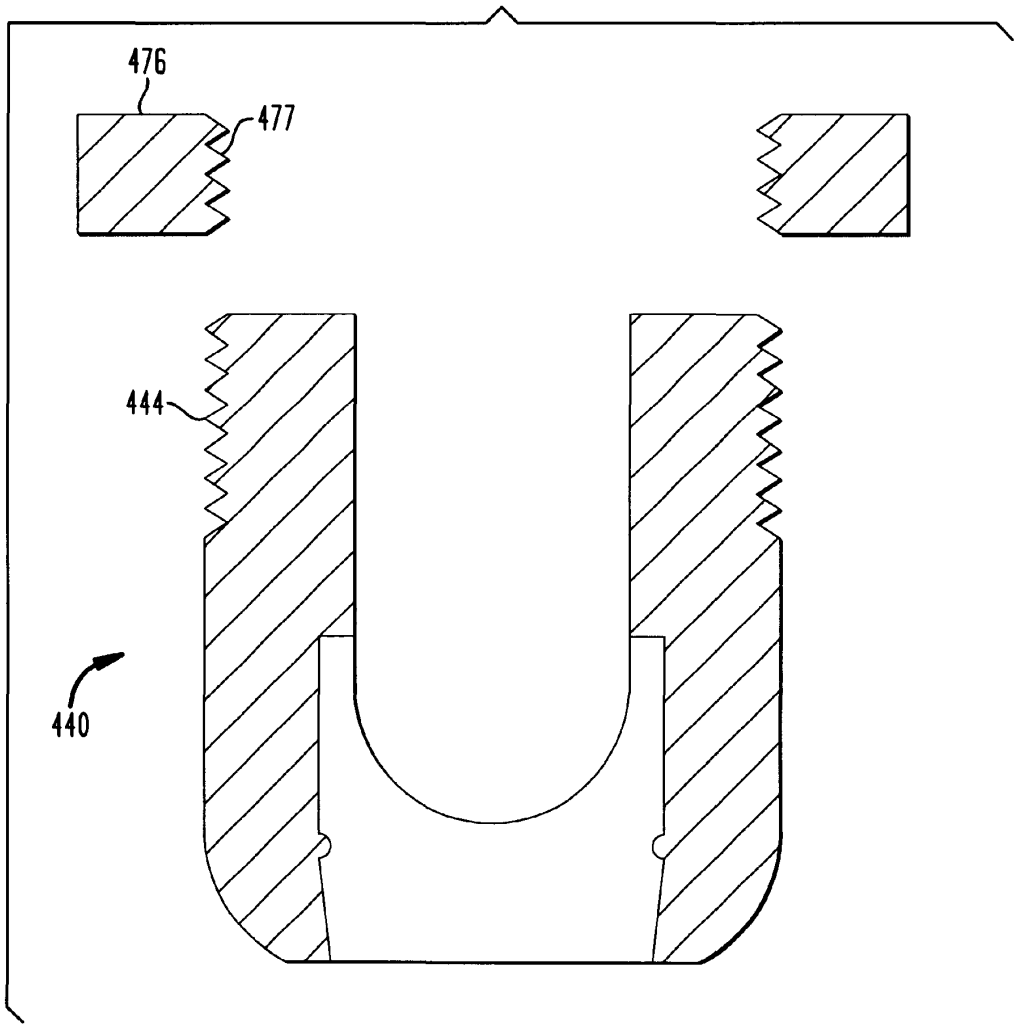

PEDICLE SCREW ASSEMBLY

BACKGROUND OF THE INVENTION

The present invention relates generally to spinal fixation devices and more specifically relates to a pedicle screw assembly having a low profile and having an improved screwhead/coupling element interface for locking the assembly.

The spinal column is a highly complex system of bones and connective tissues that provides support for the body and protects the delicate spinal cord and nerves. The spinal column includes a series of vertebrae stacked one atop the other, each vertebral body including an inner or central portion of relatively weak cancellous bone and an outer portion of relatively strong cortical bone. Situated between each vertebral body is an intervertebral disc that cushions and dampens compressive forces experienced by to the spinal column. A vertebral canal containing the spinal cord and nerves is located behind the vertebral bodies.

There are many types of spinal column disorders including scoliosis (abnormal lateral curvature of the spine), kyphosis (abnormal forward curvature of the spine, usually in the thoracic spine), excess lordosis (abnormal backward curvature of the spine, usually in the lumbar spine), spondylolisthesis (forward displacement of one vertebra over another, usually in a lumbar or cervical spine) and other disorders caused by abnormalities, disease or trauma, such as ruptured or slipped discs, degenerative disc disease, fractured vertebra, and the like. Patients that suffer from such conditions usually experience extreme and debilitating pain, as well as diminished nerve function.

The present invention generally involves a technique commonly referred to as spinal fixation whereby surgical implants are used for fusing together and/or mechanically immobilizing vertebrae of the spine. Spinal fixation may also be used to alter the alignment of adjacent vertebrae relative to one another so as to change the overall alignment of the spine. Such techniques have been used effectively to treat the above-described conditions and, in most cases, to relieve pain suffered by the patient. However, as will be set forth in more detail below, there are some disadvantages associated with current fixation devices.

One spinal fixation technique involves immobilizing the spine by using orthopedic rods, commonly referred to as spine rods, that run generally parallel to the spine. This may be accomplished by exposing the spine posteriorly and fastening bone screws to the pedicles of the appropriate vertebrae. The pedicle screws are generally placed two per vertebra and serve as anchor points for the spine rods. Clamping elements adapted for receiving a spine rod therethrough are then used to join the spine rods to the screws. The aligning influence of the rods forces the spine to conform to a more desirable shape. In-certain instances, the spine rods may be bent to achieve the desired curvature of the spinal column.

U.S. Pat. No. 5,129,388 to Vignaud et al. discloses a spinal fixation device including a pedicle screw having a U-shaped head rigidly connected to an upper end of the screw. The U-shaped head includes two arms forming a U-shaped channel for receiving a spine rod therein. The U-shaped head is internally threaded so that a set screw having external threads may be screwed therein. After the pedicle screw has been inserted into bone and a spine rod positioned in the U-shaped channel, the set screw is threaded into the internal threads of the U-shaped channel for securing the spine rod in the channel and blocking relative movement between the spine rod and the pedicle screw. The fixation device also includes a cap covering an upper portion of the U-shaped head to prevent the arms from spreading upon threading the set screw into the internal threads of U-shaped head.

Surgeons have encountered considerable difficulty when attempting to insert spinal fixation devices such as those disclosed in the above-mentioned '388 patent. This is because the U-shaped heads of adjacent screws are often out of alignment with one another due to curvature in spines and the different orientations of the pedicles receiving the screws. As a result, spine rods must often be bent in multiple planes in order to pass the rods through adjacent U-shaped channels. These problems weaken the strength of the assembly and result in significantly longer operations, thereby increasing the likelihood of complications associated with surgery.

In response to the above-noted problems, U.S. Pat. No. 5,733,286 to Errico et al., U.S. Pat. No. 5,672,176 to Biedermann et al., and U.S. Pat. No. 5,476,464 to Metz-Stavenhagen disclose polyaxial spinal fixation devices wherein the anchoring element fixed to the bone has a spherically-shaped head. The fixation devices in the above-identified patents also have orthopedic rod capturing assemblies for securing orthopedic rods in the capturing assemblies and connecting the rods with the anchoring elements. The spherically shaped heads of the anchoring elements permit movement of the anchoring elements relative to the orthopedic rod capturing assemblies. However, the above-mentioned patents do not solve all of the deficiencies of fixation devices such as those described in the Vignaud '388 patent because the respective spinal fixation devices may shift following insertion. This is due primarily to the fact that there is insufficient surface area contact between the spherically-shaped heads of the anchoring elements and the rod capturing assemblies. In addition, the devices are complex, include many parts, and are difficult to manufacture.

In certain preferred embodiments of commonly assigned U.S. patent application 09/414,272, filed Oct. 7, 1999, the disclosure of which is hereby incorporated by reference as if fully set forth herein, a pedicle screw assembly includes a fastener having a tip end for insertion into bone and an expandable head at the opposite end of the fastener. The expandable head has an outer surface including a convex portion, a recess having an inner surface and defining an inner dimension, and at least one slot extending between the inner and outer surfaces thereof for allowing expansion of the head. The assembly also has an insert which can be positioned at least partially in the recess, the insert having an outer surface and defining an outer dimension that is greater than the inner dimension of the recess. The assembly includes a coupling element having a rod receiving opening, a bore for receiving the fastener, and a seat for receiving the head of the fastener, the seat including a concave portion for receiving the convex underside of the head and allowing the fastener to pivot and rotate relative to the coupling element before being locked therein. After an orthopedic rod has been positioned within the coupling element, a locking element associated with the coupling element locks the orthopedic rod in the rod-receiving opening. The locking element is adapted to be forced against an orthopedic rod arranged in the rod receiving opening, to in turn force the insert into the recess of the expandable head so that the outer dimension of the insert bears against the inner dimension of the head, thereby expanding the outer surface of the head

against the concave seat of the coupling element for locking the fastener from further pivotal movement relative to the coupling element. In other preferred embodiments, the head is expandable by virtue of the material of which it is made such as carbon fiber.

In spite of the above-mentioned devices, there remains room for improvement of prior art spinal fixation devices in the manner of locking the screwhead, the complexity of use, difficulty in properly positioning the orthopedic rod and the rod-capturing assemblies, the required manipulation of the many parts associated with some complex devices and post-operative movement of the rod-capturing assemblies relative to the bone anchoring elements due to the weak interfaces between the two.

SUMMARY OF THE INVENTION

In accordance with certain preferred embodiments of the present invention, a stabilizing assembly used for stabilizing a spinal column includes a fastener having an upper end and a head at the upper end, and at least one anchoring element between the upper and lower ends thereof. The head of the fastener preferably includes a center, an underside including a first radial surface and a top side including a second radial surface, the first radial surface defining a first radius from the center of the head and the second radial surface defining a second radius from the center of the head, the first radius being greater than the second radius. Although the present invention is not limited by any particular theory of operation, it is believed that utilizing a fastener head having a dual-radius outer surface will provide a stabilizing assembly having a lower overall silhouette, thereby enhancing the compactness of the assembly. The lower silhouette results, in part, from the lower height of the second radial surface at the top of the head.

The pedicle screw assembly also preferably includes a coupling element that couples together the fastener and a stabilizing rod inserted into the coupling element. The coupling element desirably includes an upper end and a lower end, a rod receiving opening adapted to receive a stabilizing rod, a bore extending through the lower end of the coupling element for receiving the fastener, and a seat adjacent the lower end of the coupling element adapted to engage the first radial surface of the head when the fastener is positioned in the bore. In certain preferred embodiments the seat is a conical-shaped seat having side walls that taper inwardly toward the lower end of the coupling element. In certain preferred embodiments, the rod-receiving opening begins at the upper end of the coupling element and extends toward the lower end of the coupling element, the lower end of the rod-receiving opening preferably terminating at U-shaped channels on opposite sides of the coupling element.

The stabilizing assembly also preferably includes a locking element associated with the coupling element, the locking element being adapted to apply a force upon a stabilizing rod positioned in the rod receiving opening, whereby the stabilizing rod in turn applies a force upon the second radial surface of the head for forcing the first radial surface of the head against the conical-shaped seat for preventing further pivotal and rotational movement of the fastener and the coupling element relative to one another. The locking element may include a set screw having external threads for threadably engaging internal threads of the coupling element. However, in other embodiments, the coupling element preferably includes external threads formed on an exterior surface of the coupling element and the locking element includes a nut having internal threads threadable onto the external threads of the coupling element.

In certain preferred embodiments, the fastener is a screw fastener having a longitudinal axis extending between the upper and lower ends thereof, and includes a screwhead having at least one groove extending from the top surface of the screwhead toward the underside of the screwhead, the at least one groove being adapted to receive a driver for inserting the fastener into bone. The at least one groove preferably extends in a direction substantially parallel to the longitudinal axis of the fastener. Moreover, the at least one groove desirably includes a plurality of grooves that are equally spaced apart from one another about the head. The fastener also preferably includes a neck portion having a reduced diameter for facilitating pivotal movement of the coupling element and the fastener relative to one another. The neck of the fastener may also have a concave surface so as to broaden the pivotal range of the fastener relative to the coupling element.

The fastener may be inserted into bone using a driver including a shaft having a lower end and a plurality of prongs extending from the lower end of the shaft. The prongs are preferably adapted for being inserted into the grooves of the head. The shaft of the driver may include external threads that adapted for engaging the internal threads of the coupling element.

In operation, the coupling element is anchored in place by anchoring the screw fastener into bone, such as vertebral bone. A pilot hole may be formed in the bone before the fastener is anchored to the bone. After the coupling element is anchored in place, a gap preferably remains between the lower end of the coupling element and the bone so that the coupling element is free to pivot and rotate relative to the fastener and bone. This pivoting and rotary action facilitates the positioning of an orthopedic stabilizing rod within the rod-receiving opening of the coupling element.

After a stabilizing rod has been positioned in the rod-receiving opening of the coupling element, the locking element, i.e., an externally threaded set screw, is threaded into the internal threads of the coupling element. As the set screw is tightened, the underside of the set screw abuts the orthopedic rod to apply a downward force through the rod onto the second radial surface of the head. As used herein, the term "downward force" means a force directed toward the lower end of the coupling element. The downward force applied to the second radial surface of the head forces the first radial surface of the head into the conical-shaped seat of the coupling element. Engagement of the first radial surface of the screwhead with the conical-shaped seat locks the coupling element relative to the screwhead, thereby preventing further pivotal and rotary movement of the coupling element. As a result, the likelihood of post-operative shifting and/or movement of a spine rod or coupling element relative to one or more of the bone fasteners is significantly reduced. Thus, the present invention provides for a more reliable spinal fixation device and overcomes the post-operative shifting problems seen in prior art devices. Moreover, the pedicle screw assembly of the present invention has fewer parts. As a result, implantation operations are greatly simplified and the possibility of a component being dropped inside a patient's body greatly reduced.

In certain preferred embodiments, the fastener may have one or more holes therein for receiving bone graft material as disclosed in U.S. Pat. No. 4,484,570 to Sutter. Instead of using a screw for securing the screw to bone, in other preferred embodiments the fastener may include a hook-

shaped anchoring element as disclosed in the above-mentioned U.S. Pat. No. 5,476,464 to Metz-Stavenhagen. The fastener may also be a structure having barbs on an outer surface thereof, whereby the fastener is forced into bone and the barbs prevent the fastener from being withdrawn from the bone.

In certain preferred embodiments, the top surface of the fastener head may include a socket adapted to receive a driver, such as a screwdriver or a hexagonal wrench. In this embodiment, the fastener is attached to bone by inserting the driver into the socket, and then turning the driver to rotate the fastener in either a clockwise or counterclockwise direction.

The coupling element may also have one or more impressions or grooves formed therein for receiving a controlling device, such as a persuader instrument for seating the rod in the coupling element. In some embodiments, the impressions or grooves generally extend in a direction substantially perpendicular to the longitudinal axis of the coupling element. The groove or blind holes may be formed in the exterior surface of the coupling element.

The interior surface of the coupling element at the lower end thereof preferably defines the seat adapted for engaging the first radial surface at the underside of the head and for allowing the head to pivot relative to the coupling element before being locked in place. The seat is preferably provided adjacent the lower end of the coupling element. The seat may define a conical shape or a convex shape. In particular preferred embodiments, the seat is a conical-shaped seat. The walls of the conical-shaped seat preferably taper inwardly toward one another so that the diameter of the walls at the lower end thereof is less than the outer diameter of the head.

During assembly of the above-mentioned stabilizing device, a portion of the fastener is passed through the bore of the coupling element until the underside of head is positioned adjacent the conical-shaped seat of the coupling element. During a spinal fixation operation, after the fastener has been anchored in bone, the coupling element remains free to pivot relative to the fastener. Moreover, a gap preferably exists between the bottom of the coupling element and bone, the presence of the gap facilitating pivoting movement of the coupling element. The neck portion of the fastener, preferably having a concave surface with a diameter less than the diameter of the threaded portion of the fastener, enables the coupling element to pivot through a broader range of angles relative to the fastener. Thus, a spine rod may be more easily positioned within the rod receiving opening of the coupling element. After the rod has been positioned within the rod receiving opening, a locking element is threaded into the threads of the coupling element. As the locking element tightens down upon the rod, the rod, in turn, exerts a downward force onto the second radial surface of the head. The downward force applied to the second radial surface of the head forces the first radial surface of the head into the conical-shaped seat of the coupling element. Engagement of the first radial surface of the head with the conical-shaped seat locks the coupling element relative to the head, thereby preventing further pivotal and rotary movement of the coupling element. As a result, the likelihood of post-operative shifting and/or moving of the pedicle screw assembly is greatly reduced, thereby minimizing the occurrence of post-operative complications for spinal implant patients.

The present invention also preferably includes a tool for securing or anchoring the fastener in bone. The tool is preferably a driver having a rotatable shaft and one or more prongs extending from an end of the shaft for engaging grooves in the head. In preferred embodiments, the driver has one prong for each groove in the head of the fastener. The driver may also have external threads at a lower end of the shaft. The external threads are preferably adapted for engaging the internal threads of the coupling element when a fastener is being anchored to the bone. The engagement of the external threads of the driver and the internal threads of the coupling element generally stabilizes the assembly when the fastener is secured to bone. Specifically, the engagement of the threads prevents the coupling element from moving relative to the fastener when driving the fastener into bone, thereby simplifying installation of the fasteners.

These and other objects, features and advantages of the present invention will be more readily apparent from the detailed description of preferred embodiments set forth below, taken in conjunction with the accompanying drawings.

In other preferred embodiments, a coupling element for a stabilizing assembly desirably includes an upper end and a lower end, a rod receiving opening adapted to receive a stabilizing rod, a bore extending through the lower end of the coupling element for receiving a fastener having a head with a first radial surface of a first diameter, and a seat adjacent the lower end of the coupling element adapted to engage an underside of the head of the fastener. The coupling element preferably includes threads extending from the upper end toward the lower end of the coupling element, and an annular lip between the threads and the seat of the coupling element, whereby the annular lip has a second diameter that is less than the first diameter of the first radial surface of the head.

In still other preferred embodiments, a coupling element for a stabilizing assembly includes an upper end and a lower end remote therefrom, and a rod receiving opening adapted to receive a stabilizing rod. The coupling element preferably ahs an exterior surface and an interior surface defining a central bore extending through the lower end of the coupling element. A seat adjacent the lower end of the coupling element is desirably adapted to engage an underside of a head of the fastener, whereby the coupling element includes one or more cuts between the rod-receiving opening and the exterior surface thereof for minimizing the width of the coupling element. Although the present invention is not limited by any particular theory of operation, it is believed that providing cuts at the edge of the rod receiving opening reduces the width of the coupling element so that more coupling elements may be fit onto a given length of a stabilizing rod. The cuts also minimize the sharp edges on the coupling element, thereby reducing the chance that the coupling element will irritate a patient's tissue and/or cutting a surgeon's glove.

These and other objects, features and advantages of the present invention will be more readily apparent from the detailed description of preferred embodiments set forth below, taken in conjunction with the accompanying drawings.

BRIEF DESCRIPTION OF THE DRAWINGS

FIG. **1** shows a front elevation view of a fastener for a stabilizing assembly, in accordance with certain preferred embodiments of the present invention

FIG. **2** shows a plan view of the fastener shown in FIG. **1**.

FIG. **3**A shows a fragmentary, cross-sectional view of the fastener shown in FIG. **2** taken along line IIIA—IIIA of FIG. **2**.

FIG. **3**B shows an expanded view of a portion of the fastener shown in FIG. **3**A.

FIG. **4** shows a perspective view of a coupling element for a stabilizing assembly, in accordance with certain preferred embodiments of the present invention.

FIG. **5** shows a fragmentary, cross-sectional view of the coupling element shown in FIG. **4**.

FIGS. **6**A and **6**B show a method of assembling the fastener of FIGS. **1**–**3**B with the coupling element of FIGS. **4**–**5**, in accordance with certain preferred embodiments of the present invention.

FIG. **7** shows a perspective view of the assembly shown in FIG. **6**B.

FIG. **8** shows a perspective view of a driver for engaging the assembly of FIG. **7** for driving the fastener into bone, in accordance with certain preferred embodiments of the present invention.

FIG. **9**A shows the assembly of FIG. **7** after the fastener has been anchored in bone.

FIG. **9**B shows an expanded view of a portion of FIG. **9**A with the coupling element being pivoted to receive a stabilizing rod.

FIG. **9**C shows a stabilizing rod secured to coupling element by a set screw, in accordance with certain preferred embodiments of the present invention.

FIG. **10** shows a cross-sectional view of a coupling element, in accordance with further preferred embodiments of the present invention.

FIG. **11** shows a fragmentary view of the coupling element shown in FIG. **10**.

FIG. **12** shows a fragmentary view of a fastener, in accordance with certain preferred embodiments of the present invention.

FIGS. **13**A and **13**B show a method of assembling the fastener to a coupling element, in accordance with certain preferred embodiments of the present.

FIG. **14** shows a perspective view of a coupling element, in accordance with further preferred embodiments of the present invention.

FIG. **15** shows a front elevation view of the coupling element of FIG. **14**.

FIG. **16** shows a plan view of the coupling element shown in FIGS. **14** and **15**.

FIG. **17** shows a front elevation view of a screw fastener coupled with a coupling element, in accordance with further preferred embodiments of the present invention.

FIG. **18** shows a coupling element having external screw threads in accordance with another preferred embodiment of the present invention.

FIG. **19** shows an assembly in accordance with another embodiment of the present invention including a coupling element **440** having external threads **444** extending from an upper end thereof. The assembly also includes a locking element **476** having internal threads **477** adapted to thread onto the external threads **444** of coupling element **440**.

DETAILED DESCRIPTION

Referring to FIG. **1**, in accordance with certain preferred embodiments of the present invention, a pedicle screw assembly includes a fastener **20**, such as a screw fastener having a tip end **22** for insertion into bone and a head **24** at an upper end thereof. The screw fastener **20** preferably has external screw threads **26** that extend between the tip end **22** and screwhead **24**. The screw threads **26** terminate at a neck **28** preferably located between screwhead **24** and an upper end of the screw threads **26**. The neck **28** desirably has a concave surface having a diameter that is less than the diameter of the screw threads. The reduced diameter neck **28** allows the screw fastener **20** to pivot and rotate through a broader range of motion, as will be described in more detail below. The screw fastener, including the external threads **26**, neck **28** and screwhead **24**, are preferably made of a non-organic material that is durable and that can be implanted in a human body, such as titanium or stainless steel.

Referring to FIGS. **1** and **2**, screwhead **24** preferably has an underside **30** defining a first radial surface and a top side **32** defining a second radial surface. Screwhead **24** also desirably includes one or more grooves **34** that extend in a direction substantially parallel to the longitudinal axis of screw fastener **24**. Referring to FIG. **2**, in one preferred embodiment, screwhead **24** includes a plurality of grooves **34** evenly spaced from one another and extending around the outer perimeter of screwhead **24**. The top surface **32** screwhead **24** is preferably centered on the plurality of grooves **34**.

Referring to FIGS. **3**A and **3**B, screwhead **24** includes a center **36**, whereby the underside **30** of screwhead **24** defines the first radial surface having a radius R_1 from center **36**. Screwhead **24** includes top surface **32** having second radial surface at a second radius R_2 from center **36**. The plurality of grooves **34** are preferably adapted to receive prongs of a driver used to screw the screw fastener into bone, as will be described in more detail below.

Referring to FIGS. **4** and **5**, pedicle screw assembly also includes a coupling element **40** for coupling an orthopedic stabilizing rod with the screw fastener shown in FIGS. **1**–**3**B. Coupling element **40** is preferably made of an inert material such as titanium or stainless steel. Coupling element **40** has an upper end **42**, a lower end **44**, and a longitudinal axis C—C extending between the upper and lower ends. Coupling element **40** also preferably has an outer surface **46** including a convex surface at the lower end **44** thereof and a cylindrical surface at the upper end thereof. Outer surface **46** also preferably includes one or more grooves **48** formed therein so that coupling element **40** may be grasped and/or maneuvered using a securing element or tool, such as a persuader instrument used to seat the orthopedic rod in the pedicle screw assembly. The grooves **48** preferably extend in directions substantially perpendicular to the longitudinal axis C—C of coupling element **40**.

The coupling element **40** has a bore **50** for receiving the screw fastener the bore extending along the longitudinal axis C—C of coupling element **40**. The bore **50** defines an inner surface of coupling element **40** and has internal threads **44** extending from the upper end **42** of the coupling element toward a cavity **52** adjacent lower end **44**. The lower end of cavity **52** preferably has a conical shaped seat **54** including sidewalls tapering inwardly toward the lower end **44**. In other embodiments, the threads on the coupling element may be external threads.

FIGS. **6**A and **63** show one preferred method for assembling screw fastener **20** with coupling element **40**. Referring to FIG. **6**A, tip end **22** of screw fastener **20** is passed through bore **50** of coupling element **40** from the upper end **42** toward the lower end **44** of the coupling element so that the threaded portion of screw fastener passes through bore **50**. The threaded portion **26** of screw fastener **20** is able to pass freely through bore **50** because the threaded portion **26** has an outer diameter that is less than the internal diameter of the

internal threads **44** of coupling element **40**. Referring to FIG. **6**B, screw fastener **20** continues to be inserted toward the lower end of coupling element **40** until screwhead **24** is disposed within cavity **52** of coupling element **40** and the underside of screwhead engages the seat of coupling element.

Referring to FIG. **7**, after the screw fastener **20** has been assembled with coupling element **40**, the neck **28** of screw fastener **20** is free to pivot and rotate relative to coupling element. As mentioned above, neck **28** preferably has a reduced diameter and may also have a concave outer surface so that the screw fastener **20** and coupling element may pivot relative to one another over a broader range of angles.

After screw fastener **20** and coupling element have been assembled together, the subassembly is ready to be inserted into bone **60**. In a first step, the screw fastener **20** may be anchored to bone **60** by drilling a pilot hole into the bone. The tip end (not shown) of screw fastener **20** may then be placed in the pilot hole and the screw fastener screwed into bone **60** using a driver or tool. One preferred driver **62** for driving screw fastener **20** into bone **60** includes a rotatable shaft **64** having a lower end **66** with a plurality of downwardly extending prongs **68**. The prongs **68** are sized for fitting into the grooves **34** of the screwhead (not shown) of screw fastener **20**. Upon rotation of shaft **64**, prongs **68** engage grooves **34** of screw fastener **20** for rotating screw fastener **20** and screwing the fastener into bone **60**. Driver **62** may also include external threads **70**, preferably between shaft **64** and prongs **68**. External threads **70** are designed for threadably mating with the internal threads **44** of coupling element **40** (FIGS. **4**–**5**). The mating engagement of the external threads **70** of driver **62** and the internal threads **44** of coupling element **40** generally stabilizes the pedicle screw assembly when driving the screw fastener **20** into bone **60**.

Referring to FIGS. **9**A and **9**B, after screw fastener **20** is anchored in bone **60**, coupling element **40** remains free to pivot and rotate relative to the screw fastener so that an orthopedic stabilizing rod **72** may be positioned within the rod receiving opening **74** of coupling element **40**. Rod receiving opening **74** preferably includes a U-shaped opening extending from the top **42** of coupling element **40**. Moreover, after screw fastener has been fully inserted into bone, a gap exists between the lower end **44** of coupling element **40** and bone **60**. The gap facilitates pivotal and rotational movement of coupling element **40** relative to screw fastener **20**. The coupling element **40** may then be moved (e.g. pivoted) by engaging grooves **48** with a tool or by grasping the outer body portion of the coupling element. Coupling element **40** would then be pivoted and/or rotated so that an orthopedic rod **72** can be positioned in the rod receiving opening **74**, as shown in FIG. **9**B.

Referring to FIG. **9**C, after stabilizing rod **72** has been positioned within coupling element **40**, a set screw **76** having external threads (not shown) is screwed into the internal threads **44** of coupling element **40**. Set screw **76** continues to be threaded into the internal threads **44** until an underside **78** of set screw **76** abuts against stabilizing rod **72**. Set screw **76** is then further rotated into internal threads **44** for locking stabilizing rod **72** in rod receiving channel **74**. The tightened set screw **76** applies a downward force through rod **72** onto the second radial surface at the top side **32** of screwhead **24**. The downward force applied to the second radial surface of screwhead **24** forces the first radial surface at the underside **30** of screwhead **24** into the conical-shaped seat **54** of coupling element **40**. Engagement of the first radial surface at the underside **30** of screwhead **24** with the conical-shaped seat **54** creates a spherical surface/conical surface friction lock that locks the coupling element **40** relative to the screwhead **24**, thereby preventing further pivotal and rotary movement of coupling element **40** and screw fastener **20** relative to one another. Although the present invention is not limited by any particular theory of operation, it is believed that the engagement of the spherical surface of the screwhead with the conical seat of the coupling element dramatically improves the locking force exerted at the interface of the screwhead and the coupling element.

Referring to FIG. **10**, in accordance with other preferred embodiments of the present invention, a coupling element **140** for a stabilizing assembly includes an upper end **142** and a lower end **144**. Coupling element **140** also includes an outer surface **146** extending between upper and lower ends **142**, **144**, the outer surface **146** including one or more grooves **148**. Coupling element also includes a centrally located bore **150** extending between the upper end **142** and lower end **144** along longitudinal axis C—C. Bore **150** is surrounded by interior threads **151** extending from the upper end **142** toward the lower end **144**. Coupling element **140** also includes a cavity **152** adjacent lower end **144**, the cavity including a conical-shaped seat **154** having sidewalls that taper inwardly toward the lower end **144** of coupling element **140**. Coupling element **140** also preferably includes an interior wall **153** having diameter D_W between interior threads **151** and cavity **152**, and a lip **155** between interior wall **153** and cavity **152**. The lip **155** has a diameter D_L that is less than the diameter D_W of interior wall **153**. As shown in FIG. **12**, the outer diameter D_S of the first radial surface **130** of screwhead **124** is greater than the diameter D_L of the lip **155** of coupling element. As a result, lip **155** serves as a detent that holds fastener **120** in the cavity **152** of coupling element **140** after the screwhead of fastener **120** has been assembled with the coupling element **140**.

FIG. **11** shows a magnified view of a portion of the coupling element **140** shown in FIG. **10**. As described above, coupling element **140** includes bore **150** extending from an upper end (not shown) toward lower end **144** thereof, and an interior wall **153** extending between internal threads **151** and cavity **152**. Cavity **152** includes conical-shaped seat **154** having inwardly tapering sidewalls **154**. Coupling element **140** includes lip **155** positioned between interior wall **153** and cavity **152**. Lip **155** has a diameter D_L that is less than the diameter D_W of the interior wall **153** of coupling element **140**.

FIG. **12** shows screw fastener **120** having screwhead **124** at an upper end thereof, the screwhead including a first radial surface **130** at an underside thereof and a second radial surface **132** at a top side of screwhead **124**. Screwhead **124** includes a center **136**, a first radial surface **130** from center **136** having has a radius R_1 and a second radial surface **132** from center **136** having a second radius R_2, whereby R_1 is greater than R_2. The first radial surface of screwhead **124** defines an outer diameter D_S that is two times the length of R_1.

FIGS. **13**A and **13**B show screw fastener **120** being assembled with the coupling element **140** shown in FIGS. **10** and **11**. As mentioned above, coupling element **140** includes lip **155** having a diameter D_L that is less than the diameter D_S of the first radial surface **130** of screwhead **124**, however, the outer diameter D_S of the first radial surface **130** of screwhead **124** is less than the inner diameter of inner wall **153**.

Referring to FIGS. **13**A and **13**B, during assembly of screw fastener **120** to coupling element **140**, the screw

fastener **120** is passed through bore **150** so that screw threads **126** pass through the opening at lower end **144** of coupling element **140**. Because the outer diameter D_S of screwhead **124** is less than the inner diameter of inner wall **153**, screwhead **124** passes easily through bore **150** until first radial surface **130** engages lip **155**. Because the inner diameter D_L of lip **155** is less than the outer diameter D_S of the first radial surface **130** of screwhead **124**, the lip **155** acts as a detent and the screwhead must be forced through the reduced diameter of lip **155**. Referring to FIG. **13**B, after the outer diameter D_S of screwhead **124** has passed by lip **155**, the screwhead is retained within cavity **152** by lip **155**, with coupling element **140** pivotable relative to screwhead **124** for capturing a stabilizing rod. After stabilizing rod is captured within the U-shaped opening of coupling element **140**, a set screw (not shown) may be threaded into internal threads **151** of coupling element **140** for capturing the stabilizing rod within the U-shaped opening. The set screw is then preferably tightened for exerting a downward force upon the stabilizing rod which, in turn, applies a force to the second radial surface **132** of screwhead **124**. The downward force on the second radial surface **132** forces the first radial surface **130** into the conical-shaped seat of coupling element for locking the screwhead and coupling element relative to one another.

FIGS. **14–16** show a coupling element **240** in accordance with further preferred embodiments of the present invention. Coupling element **240** includes upper end **242**, lower end **244** and outer wall **246** extending between upper and lower ends **242**, **244**. The outer surface **246** of coupling element **240** includes grooves **248** on opposing arms thereof. Coupling element **240** has central bore **150** extending between upper and lower ends thereof. Coupling element **240** has a first arm **261**A and a second arm **261**B on either side of U-shaped rod-receiving opening **174**, the U-shaped rod-receiving opening being adapted to receive a stabilizing rod (not shown). The edges of the U-shaped opening include cuts **263** formed therein. The cuts **263** reduce the profile or width of the coupling element, thereby minimizing interference with other coupling elements when a series of coupling elements are connected with a stabilizing rod. The cuts **263** allow the coupling elements **240** to be packed more tightly together and to be secured over each vertebrae, thereby improving fusion of a spinal segment. Although the present invention is not limited by any particular theory of operation, it has been observed that some patients have relatively small vertebrae, making it difficult to secure a coupling element over each vertebrae. As a result, some of the vertebrae may not have a section of the stabilizing assembly attached thereto, a situation that may adversely affect stabilization and fusion of a spine segment because the entire portion of the spine segment is not being stabilized. In addition, the cuts **263** minimize the occurrence of sharp edges on the coupling element that may irritate a patient's tissue or cut through a surgeon's surgical glove.

FIG. **17** shows a front elevation view of the coupling element **240** of FIGS. **14–16** assembled with screw fastener **220**. Coupling element **240** includes internal threads (not shown) for receiving set screw **276**. Coupling element **240** includes cuts **263** for minimizing the profile of the coupling element and reducing the occurrence of sharp edges.

FIG. **19** shows an assembly in accordance with another embodiment of the present invention including a coupling element **440** having external threads **444** extending from an upper end thereof. The assembly also includes a locking element **476** having internal threads **477** adapted to thread onto the external threads **444** of coupling element **440**.

Although the invention herein has been described with reference to particular embodiments, it is to be understood that these embodiments are merely illustrative of the principles and applications of the present invention. It is therefore to be understood that numerous modifications may be made to the illustrative embodiments and that other arrangements may be devised without departing from the spirit and scope of the present invention as defined by the appended claims.

What is claimed is:

1. A stabilizing assembly comprising:

a fastener having an upper end and a lower end, a head at the upper end, and at least one anchoring element between the upper and lower ends thereof;

said head including a center, an underside including a first radial surface and a top side including a second radial surface, wherein said first radial surface defines a first radius from the center of said head and said second radial surface defines a second radius from the center of said head, the first radius being greater than the second radius; and

a coupling element having an upper end and a lower end, said coupling element including a rod receiving opening adapted to receive a stabilizing rod, a bore extending through the lower end of said coupling element for receiving said fastener, and a conical-shaped seat adjacent the lower end of said coupling element, wherein the first radial surface of said head is engagable with the conical-shaped seat when said fastener is positioned in the bore.

2. The stabilizing assembly as claimed in claim **1**, further comprising:

a locking element associated with said coupling element to apply a force upon a stabilizing rod positioned in said rod receiving opening, wherein said stabilizing rod is in direct contact with and applies a force upon the second radial surface of said head for forcing the first radial surface of said head against the conical-shaped seat for preventing further pivotal and rotational movement of said fastener and said coupling element relative to one another.

3. The assembly as claimed in claim **1**, wherein said fastener is a screw fastener, and wherein the at least one anchoring element comprises screw threads extending between the upper and lower ends thereof.

4. The assembly as claimed in claim **1**, wherein the at least one anchoring element comprises a hook at the lower end of said fastener.

5. The assembly as claimed in claim **3**, wherein said head includes at least one groove extending from the top surface toward the underside thereof, said at least one groove being adapted to receive a driver for inserting said fastener into bone.

6. The assembly as claimed in claim **5**, wherein said at least one groove extends in a direction substantially parallel to the longitudinal axis of said screw fastener.

7. The assembly as claimed in claim **5**, wherein said at least one groove includes a plurality of grooves.

8. The assembly as claimed in claim **7**, further comprising a driver comprising a shaft having a lower end and a plurality of prongs extending from the lower end of the shaft and insertable into said grooves of said screwhead.

9. The assembly as claimed in claim **8**, wherein said driver includes external threads provided on the shaft.

10. The assembly as claimed in claim **9**, wherein said coupling element includes internal threads, and wherein the external threads of said driver are engagable with the internal threads of said coupling element.

11. The assembly as claimed in claim 1, wherein said coupling element includes internal threads extending from the upper end toward the lower end thereof, said coupling element including an annular lip having a diameter between the internal threads and the conical-shaped seat of the coupling element, and wherein the diameter of said annular lip is less than twice the first radius of said head.

12. The assembly as claimed in claim 1, wherein the center of said screwhead is in substantial alignment with the longitudinal axis of said screw fastener.

13. The assembly as claimed in claim 1, wherein said coupling element has threads extending from the upper end thereof.

14. The assembly as claimed in claim 13, wherein the threads of said coupling element are internal threads formed on an interior surface of said coupling element.

15. The assembly as claimed in claim 14, wherein said locking element comprises a set screw having external threads for threadably engaging the internal threads of said coupling element.

16. The assembly as claimed in claim 1, wherein the threads of said coupling element are exterior threads formed on an exterior surface of said coupling element.

17. The assembly as claimed in claim 16, wherein said locking element comprises a nut having internal threads for threadably engaging the exterior threads of said coupling element.

18. The assembly as claimed in claim 1, wherein said coupling element includes an exterior surface having one or more notches formed therein.

19. The assembly as claimed in claim 18, wherein said coupling element includes one or more cuts between the rod-receiving opening and the exterior surface thereof for minimizing the width of said coupling element.

20. The assembly as claimed in claim 1, wherein said fastener is a screw fastener having screw threads and a neck having a reduced diameter between the head of said fastener and the screw threads.

21. The assembly as claimed in claim 20, wherein the neck of said screw fastener has a concave surface.

22. The assembly as claimed in claim 1, wherein said stabilizing assembly is made from a material selected from the group consisting on titanium and stainless steel.

23. A stabilizing assembly comprising:

a fastener having an upper end and a lower end, a head at the upper end, and at least one anchoring element between the upper and lower ends for anchoring the fastener to bone;

said head including a center, an underside including a first radial surface and a top side including a second radial surface, said first radial surface defining a first radius from the center of said head and said second radial surface defining a second radius from the center of said head, the first radius being greater than the second radius; and

a coupling element having an upper end and a lower end, said coupling element including a rod receiving opening adapted to receive a stabilizing rod, a bore extending through the lower end of said coupling element for receiving said fastener, and a seat adjacent the lower end of said coupling element engagable with the first radial surface of said head when said fastener is positioned in the bore, wherein the seat of said coupling element is substantially conical-shaped and includes inwardly tapering sidewalls.

24. The stabilizing assembly as claimed in claim 23, further comprising:

a locking element associated with said coupling element, said locking element being adapted to apply a force upon a stabilizing rod positioned in said rod receiving opening, wherein said stabilizing rod in turn directly engages the second radial surface at the top side of said head for forcing the underside of said head against the conical-shaped seat for preventing further pivotal and rotational movement of said screw fastener and said coupling element relative to one another.

25. The stabilizing assembly as claimed in claim 23, wherein said fastener is a screw fastener having screw threads, the at least one anchoring element including the screw threads.

26. The stabilizing assembly as claimed in claim 23, wherein said fastener includes a hook, the at least one anchoring element including the hook.

27. A stabilizing assembly comprising:

a fastener having an upper end and a lower end, a head at the upper end, and at least one anchoring element extending between the upper and lower ends, said head including an underside having a first radial surface; and

a coupling element having an upper end and a lower end, said coupling element including a rod receiving opening adapted to receive a stabilizing rod, a bore extending through the lower end of said coupling element for receiving said fastener, and a conical-shaped seat adapted to engage the first radial surface of said head when said fastener is positioned in the bore.

28. The stabilizing assembly as claimed in claim 27, further comprising:

a locking element associated with said coupling element, said locking element being adapted to apply a force against a stabilizing rod positioned in said rod receiving opening, said stabilizing rod in turn applying a direct force to a top side of said head for forcing the first radial surface of said head against the conical-shaped seat of said coupling element.

29. The stabilizing assembly as claimed in claim 28, wherein the top side of said head includes a second radial surface, and wherein said first radial surface defines a first radius from a center of said head and said second radial surface defines a second radius from the center of said head, the first radius being greater than the second radius.

30. The assembly as claimed in claim 29, wherein the center of said head is in substantial alignment with a longitudinal axis of said fastener.

31. The assembly as claimed in claim 30, wherein said fastener is a screw fastener, the at least one anchoring element including screw threads extending between the upper and lower ends of said fastener.

32. The assembly as claimed in claim 27, wherein said coupling element has threads extending from the upper end thereof and said locking element includes a threaded set screw having threads adapted to mesh with the threads of said coupling element.

33. A bone fastener having an upper end and a lower end, said bone fastener comprising:

a head at the upper end thereof; and

at least one bone anchoring element extending between the upper and lower ends of said fastener, wherein said head includes a center, an underside having a first radial surface with a first radius from the center, and a top side having a second radial surface with a second radius from the center, wherein the first radius is greater than the second radius, wherein said fastener is insertable into a coupling element having an upper end and a

lower end, said coupling element including a rod receiving opening, a bore extending through the lower end of said coupling element for receiving said fastener, and a conical-shaped seat adjacent the lower end of said coupling element being engagable with the first radial surface at the underside of said head when said fastener is positioned in the bore, wherein said inserted screw fastener pivots relative to said coupling element before being locked from further movement relative to said coupling element.

34. The fastener as claimed in claim **33**, wherein said fastener comprises a material selected from the group consisting of titanium and stainless steel.

35. The fastener as claimed in claim **33**, wherein said fastener includes screw threads extending between the upper and lower ends thereof.

36. The fastener as claimed in claim **33**, wherein said fastener includes a hook at the lower end thereof.

37. A stabilizing assembly for use in conjunction with an orthopedic stabilizing rod, said assembly comprising:

a fastener including a lower end insertable into bone and a head at an upper end thereof having a first radial surface with a first radius at an underside of said head and a second radial surface with a second radius at a top side of said head, wherein the first radius is greater than the second radius; and

a coupling element having an upper end and a lower end, said coupling element including a rod receiving opening adapted to receive a stabilizing rod, a bore extending through the lower end of said coupling element for receiving said fastener, and a conical-shaped seat adapted to directly engage the first radial surface at the underside of said head when said fastener is assembled with said coupling element, wherein said fastener and said coupling element are free to pivot and rotate relative to one another before the head of said fastener is locked in said coupling element.

38. The assembly as claimed in claim **37**, wherein said coupling element includes an exterior surface having one or more notches formed therein, said notches being engageable for securing said coupling element.

39. The assembly as claimed in claim **37**, further comprising a locking element for locking a stabilizing rod in the rod receiving opening of said coupling element, said locking element being associated with said coupling element to force said stabilizing rod against the second radial surface of said head which in turn forces the first radial surface of said head against the conical-shaped seat of said coupling element for preventing said coupling element and said screw fastener from pivoting and rotating relative to one another.

40. The assembly as claimed in claim **37**, wherein said fastener includes screw threads extending between the upper and lower ends thereof.

41. The assembly as claimed in claim **37**, wherein said fastener includes a hook.

42. A coupling element for a stabilizing assembly comprising:

an upper end and a lower end;

a rod receiving opening adapted to receive a stabilizing rod;

a bore extending through the lower end of said coupling element for receiving a fastener having a head with a first radial surface of a first diameter;

a conical-shaped seat adjacent the lower end of said coupling element adapted to directly engage a radial underside of the head of said fastener;

threads extending from the upper end toward the lower end of said coupling element; and

an annular lip between the threads and the seat of said coupling element, wherein said annular lip has a second diameter that is less than the first diameter of the first radial surface of said head.

43. A coupling element for a stabilizing assembly comprising:

an upper end and a lower end remote therefrom;

a rod receiving opening adapted to receive a stabilizing rod;

said coupling element having an exterior surface and an interior surface defining a central bore extending through the lower end of said coupling element;

a conical-shaped seat adjacent the lower end of said coupling element adapted to directly engage a radial underside of a head of said fastener, wherein said coupling element includes one or more cuts between the rod-receiving opening and the exterior surface thereof for minimizing the width of said coupling element.

* * * * *

UNITED STATES PATENT AND TRADEMARK OFFICE

CERTIFICATE OF CORRECTION

PATENT NO. : 6,488,681 B2
DATED : December 3, 2002
INVENTOR(S) : Greg Martin, Yves Crozet and William J. Kelly

It is certified that error appears in the above-identified patent and that said Letters Patent is hereby corrected as shown below:

Column 7,
Line 50, "FIG. 18" should read -- FIG. 19 --.
Line 53, delete the paragraph beginning with "FIG. 19" and ending with "coupling element 440."

Signed and Sealed this

Fifteenth Day of July, 2003

JAMES E. ROGAN
Director of the United States Patent and Trademark Office

UNITED STATES PATENT AND TRADEMARK OFFICE

CERTIFICATE OF CORRECTION

PATENT NO. : 6,488,681 B2
DATED : December 3, 2002
INVENTOR(S) : Greg Martin, Yves Crozet and William J. Kelly

It is certified that error appears in the above-identified patent and that said Letters Patent is hereby corrected as shown below:

Column 1,
Line 55, “In-certain” should read -- In certain --.

Column 7,
Line 50, insert the following paragraph:
-- Figure 18 shows a fastener for a stabilizing assembly in accordance with further preferred embodiments of the present invention. --.
Line 50, "FIG. 18" should read -- FIG. 19 --.
Line 53, delete the paragraph beginning with "FIG. 19" and ending with "coupling element 440."

Column 11,
Line 62, insert the following paragraph: -- Figure 18 shows a fastener 320 in accordance with another embodiment of the present invention. Fastener 320 includes head 324 having a first radial surface 330 having radius R_1 from center 336 and second radial surface 332 having radius R_2 from center 336. The first radius R_1, is greater than the second radius R_2. Fastener 320 includes hook 370 for securing the fastener to bond (not shown). --

This certificate supersedes Certificate of Correction issued July 15, 2003

Signed and Sealed this

Sixteenth Day of September, 2003

JAMES E. ROGAN
Director of the United States Patent and Trademark Office