US010548641B2

(12) **United States Patent**
Jackson et al.

(10) **Patent No.: US 10,548,641 B2**
(45) **Date of Patent: Feb. 4, 2020**

(54) **MEDICAL IMPLANT RECEIVERS HAVING DUAL LEAD IN CLOSURE MATING THREAD FORMS**

(71) Applicant: **Roger P. Jackson**, Prairie Village, KS (US)

(72) Inventors: **Roger P. Jackson**, Prairie Village, KS (US); **James L. Surber**, Kansas City, KS (US)

(73) Assignee: **Roger P. Jackson**, Prairie Village, KS (US)

(*) Notice: Subject to any disclaimer, the term of this patent is extended or adjusted under 35 U.S.C. 154(b) by 0 days.

(21) Appl. No.: **15/964,502**

(22) Filed: **Apr. 27, 2018**

(65) **Prior Publication Data**

US 2018/0243013 A1 Aug. 30, 2018

Related U.S. Application Data

(63) Continuation of application No. 15/469,076, filed on Mar. 24, 2017, now Pat. No. 9,956,004, which is a continuation of application No. 14/566,356, filed on Dec. 10, 2014, now Pat. No. 9,636,146, which is a continuation of application No. 13/694,849, filed on Jan. 10, 2013, now Pat. No. 8,911,479.

(60) Provisional application No. 61/631,746, filed on Jan. 10, 2012, provisional application No. 61/634,361, filed on Feb. 28, 2012.

(51) **Int. Cl.**
A61B 17/70 (2006.01)
A61B 17/86 (2006.01)

(52) **U.S. Cl.**
CPC ***A61B 17/7035*** (2013.01); ***A61B 17/7032*** (2013.01); ***A61B 17/863*** (2013.01); ***A61B 17/8665*** (2013.01); ***A61B 17/8685*** (2013.01); *A61B 2017/8655* (2013.01)

(58) **Field of Classification Search**
CPC A61B 17/7035; A61B 17/7032; A61B 17/863; A61B 17/8665; A61B 17/8685; A61B 2017/8655
USPC 606/246, 264–273, 275, 278, 279, 305, 606/308, 315, 316; 403/362; 411/393
See application file for complete search history.

(56) **References Cited**

U.S. PATENT DOCUMENTS

2,005,348 A 6/1935 Michell
2,244,046 A 6/1941 Bradshaw
(Continued)

FOREIGN PATENT DOCUMENTS

DE 20207850 U1 10/2002
EP 1316294 A2 6/2003
(Continued)

OTHER PUBLICATIONS

U.S. Appl. No. 16/391,049, filed Apr. 22, 2019, Jackson et al.

Primary Examiner — Pedro Philogene
Assistant Examiner — David C Comstock
(74) *Attorney, Agent, or Firm* — Polsinelli PC

(57) **ABSTRACT**

An open implant closure structure includes a helically wound guide and advancement structure having at least two helically wound forms thereon providing a multi-start closing mechanism for use between spaced arms of a cooperating open medical implant having mating helically wound structure thereon. Illustrated structures include interlocking flange forms, v-threads, square threads, reverse angle threads and buttress threads and receivers with break-off extensions and cooperating tooling.

28 Claims, 7 Drawing Sheets

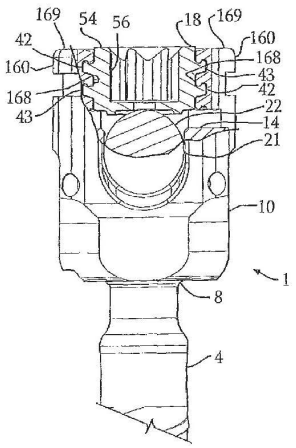

(56) **References Cited**

U.S. PATENT DOCUMENTS

2,833,325 A 5/1958 Laisy
3,963,322 A 6/1976 Gryctko
4,528,874 A 7/1985 Dunn
4,600,225 A 7/1986 Blose
5,067,955 A 11/1991 Cotrel
5,092,635 A 3/1992 DeLange et al.
5,171,279 A 12/1992 Mathews
5,217,497 A 6/1993 Mehdian
5,234,430 A 8/1993 Huebner
5,334,203 A 8/1994 Wagner
5,605,458 A 2/1997 Bailey et al.
5,607,304 A 3/1997 Bailey et al.
5,672,176 A 9/1997 Biedermann et al.
5,797,911 A 8/1998 Sherman et al.
5,961,517 A 10/1999 Biedermann et al.
6,006,930 A 12/1999 Dreyer et al.
6,010,502 A * 1/2000 Bagby A61F 2/44 606/247
6,063,090 A 5/2000 Schlapfer
6,077,262 A 6/2000 Schlapfer et al.
6,077,267 A 6/2000 Huene
6,254,146 B1 7/2001 Church
6,296,642 B1 10/2001 Morrison et al.
6,412,831 B1 7/2002 Noel et al.
6,443,953 B1 9/2002 Perra et al.
6,485,491 B1 11/2002 Farris et al.
6,520,962 B1 2/2003 Taylor et al.
6,554,834 B1 4/2003 Crozet et al.
6,730,089 B2 5/2004 Jackson
6,835,196 B2 12/2004 Biedermann et al.
6,997,927 B2 2/2006 Jackson
7,204,838 B2 4/2007 Jackson
7,250,052 B2 7/2007 Landry et al.
7,591,839 B2 9/2009 Biedermann et al.
7,717,942 B2 5/2010 Schumacher
7,766,945 B2 8/2010 Nilsson et al.
7,794,477 B2 9/2010 Melkent et al.
7,857,834 B2 12/2010 Boschert
7,972,364 B2 7/2011 Biedermann et al.
8,092,494 B2 1/2012 Butler et al.
8,162,989 B2 4/2012 Khalili
8,382,809 B2 2/2013 Kaufman et al.
8,814,913 B2 8/2014 Jackson
8,828,060 B2 9/2014 Biedermann et al.
8,911,479 B2 12/2014 Jackson et al.
8,998,956 B2 * 4/2015 George A61B 17/0642 606/250
9,068,587 B2 6/2015 Sage et al.
9,445,847 B2 9/2016 Biedermann et al.
9,636,146 B2 5/2017 Jackson et al.
9,717,533 B2 8/2017 Jackson et al.
9,743,957 B2 8/2017 Jackson
9,861,394 B2 1/2018 Jackson
10,004,541 B1 6/2018 Jackson
2002/0120272 A1 * 8/2002 Yuan A61B 17/7032 606/276
2002/0143341 A1 10/2002 Biedermann et al.
2003/0023243 A1 1/2003 Biedermann et al.
2003/0100904 A1 5/2003 Biedermann
2003/0149431 A1 8/2003 Varieur et al.
2003/0199873 A1 * 10/2003 Richelsoph A61B 17/7032 606/278
2004/0039383 A1 2/2004 Jackson
2004/0049196 A1 3/2004 Jackson
2004/0138662 A1 7/2004 Landry et al.
2004/0143265 A1 7/2004 Landry
2004/0147929 A1 7/2004 Biedermann et al.
2004/0167524 A1 8/2004 Jackson
2004/0167525 A1 8/2004 Jackson
2004/0172032 A1 9/2004 Jackson
2004/0186474 A1 9/2004 Matthis et al.
2005/0131421 A1 * 6/2005 Anderson A61B 17/00234 606/99
2005/0182410 A1 * 8/2005 Jackson A61B 17/7032 606/278
2005/0216003 A1 9/2005 Biedermann et al.
2005/0277928 A1 12/2005 Boschert
2006/0009773 A1 1/2006 Jackson
2006/0083603 A1 4/2006 Jackson
2007/0208344 A1 9/2007 Young
2008/0215100 A1 9/2008 Matthis et al.
2008/0269809 A1 10/2008 Garamszegi
2008/0292429 A1 11/2008 Hasenbohler et al.
2011/0152947 A1 6/2011 Kirschman
2011/0270321 A1 11/2011 Prevost et al.
2013/0013003 A1 1/2013 Carbone et al.
2014/0081334 A1 3/2014 Jackson
2014/0142633 A1 5/2014 Jackson et al.
2014/0214097 A1 7/2014 Jackson et al.
2015/0119942 A1 4/2015 Jackson et al.
2015/0148846 A1 5/2015 Jackson
2015/0164558 A1 6/2015 Jackson et al.
2016/0038188 A1 2/2016 Jackson et al.
2016/0242818 A1 8/2016 Jackson
2017/0189073 A1 7/2017 Jackson et al.
2017/0333083 A1 11/2017 Jackson et al.
2017/0354441 A1 12/2017 Jackson et al.
2017/0354443 A1 12/2017 Jackson
2018/0132901 A1 5/2018 Jackson et al.
2018/0296249 A1 10/2018 Jackson
2019/0231400 A1 8/2019 Jackson et al.

FOREIGN PATENT DOCUMENTS

EP 1570796 A1 9/2005
WO WO 95/13755 5/1995
WO WO 02/076314 10/2002

* cited by examiner

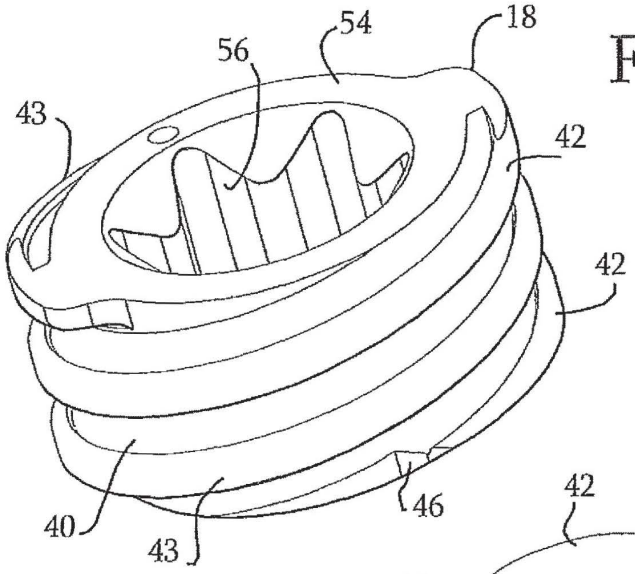

Fig. 1.

Fig. 2.

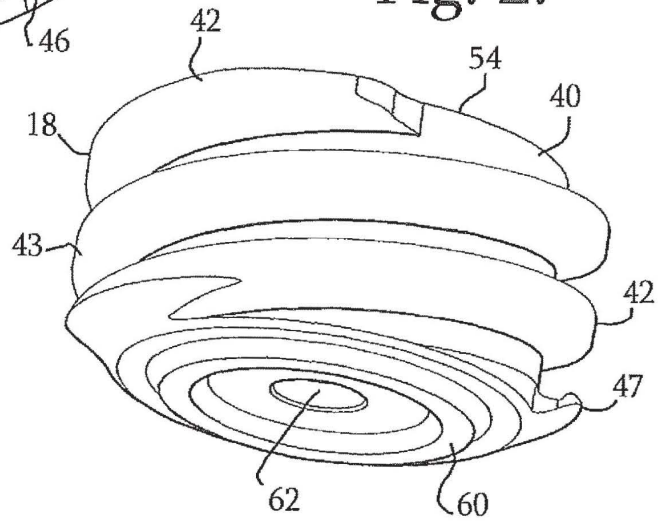

Fig. 3.

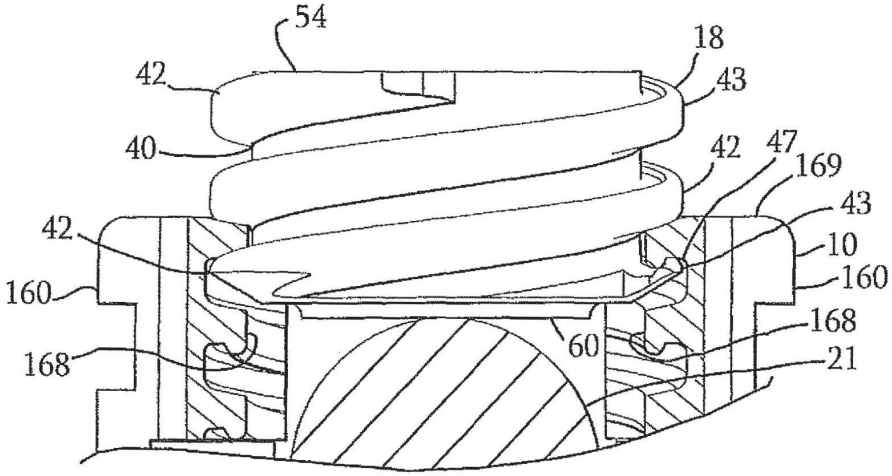

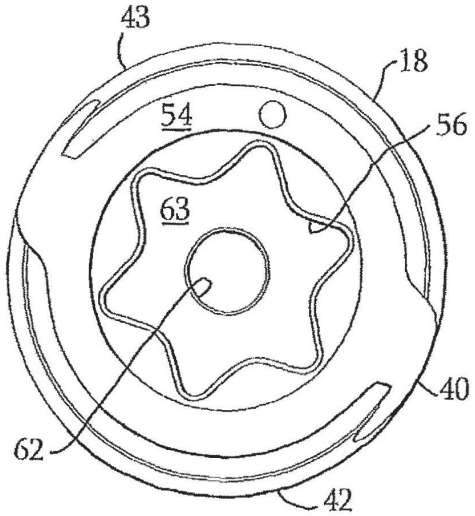

Fig. 4.

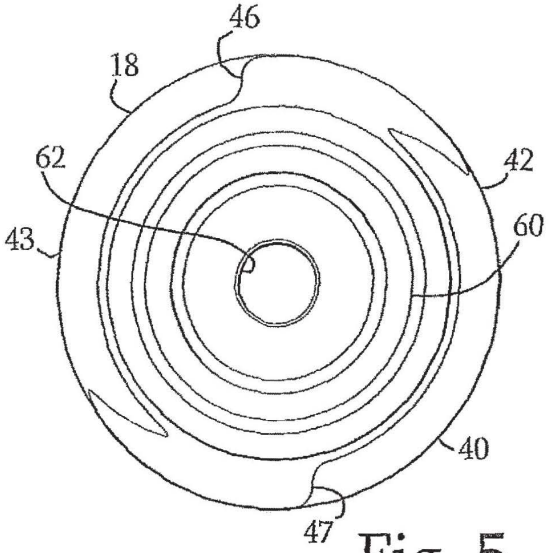

Fig. 5.

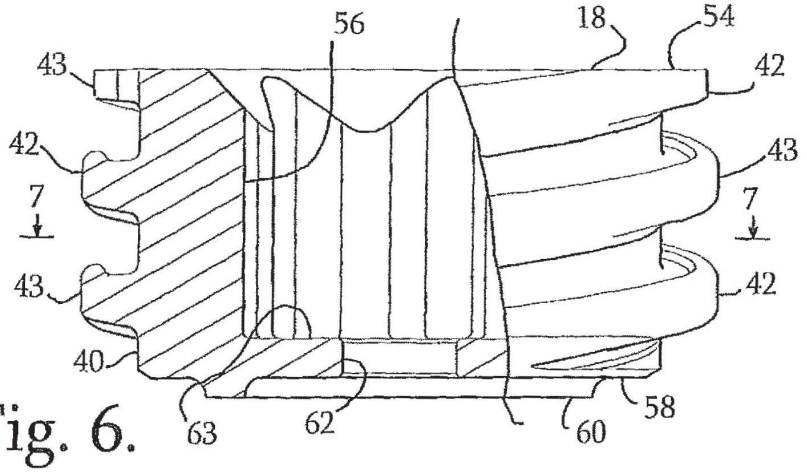

Fig. 6.

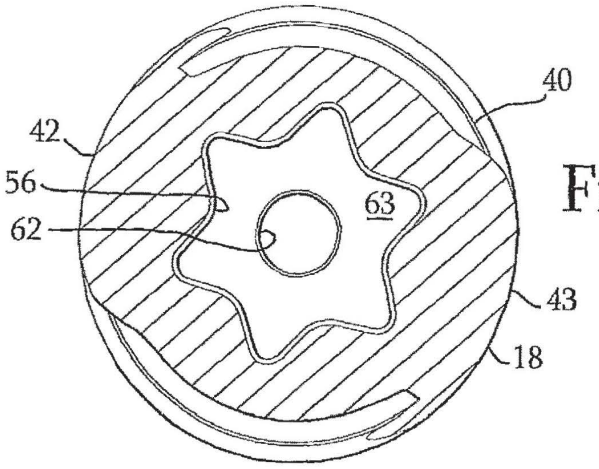

Fig. 7.

Fig. 8.

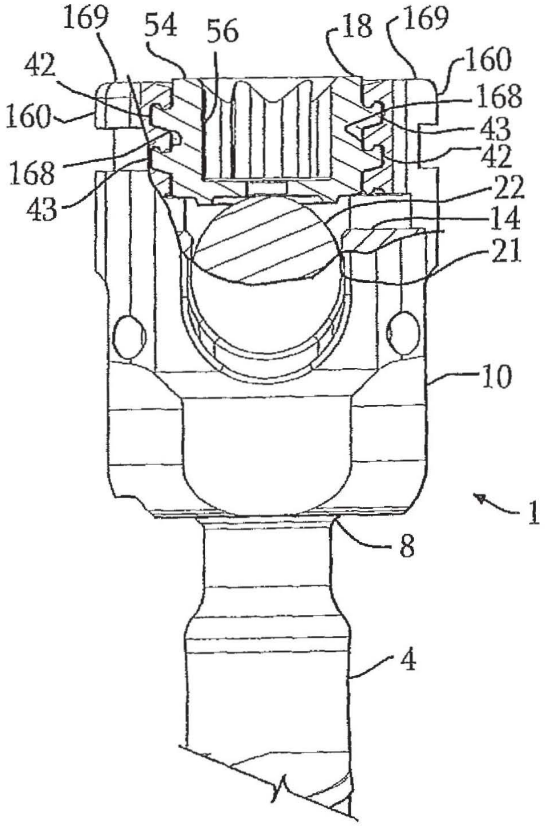

Fig. 9.

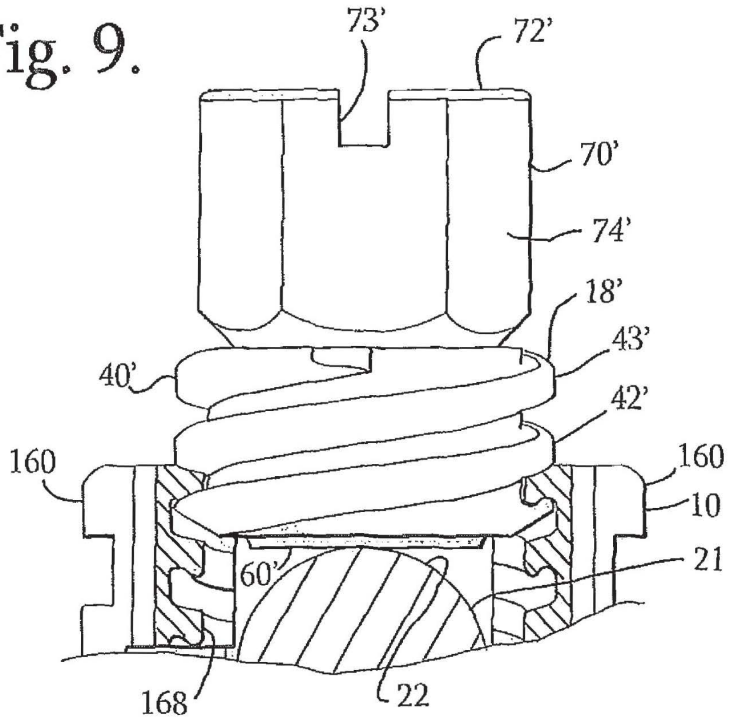
73'
72'
70'
74'
18'
43'
40'
42'
160
160
10
21
60'
168
22

Fig. 10.

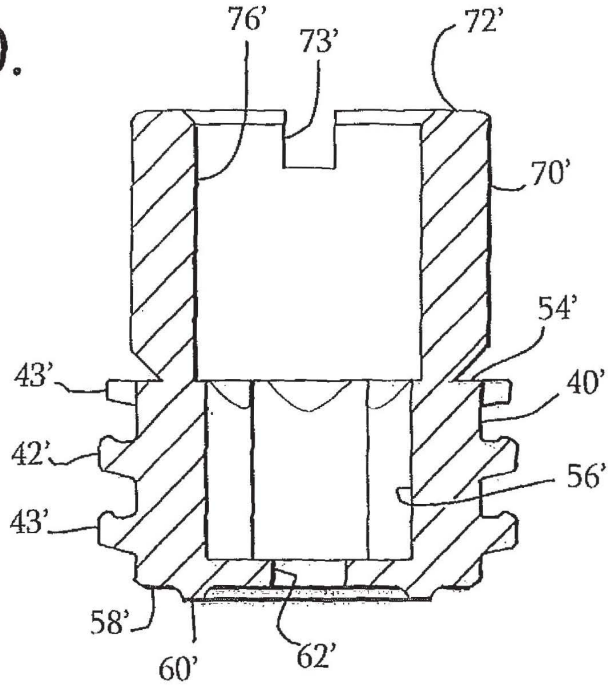
76'
73'
72'
70'
54'
43'
40'
42'
56'
43'
58'
60'
62'

Fig. 11.

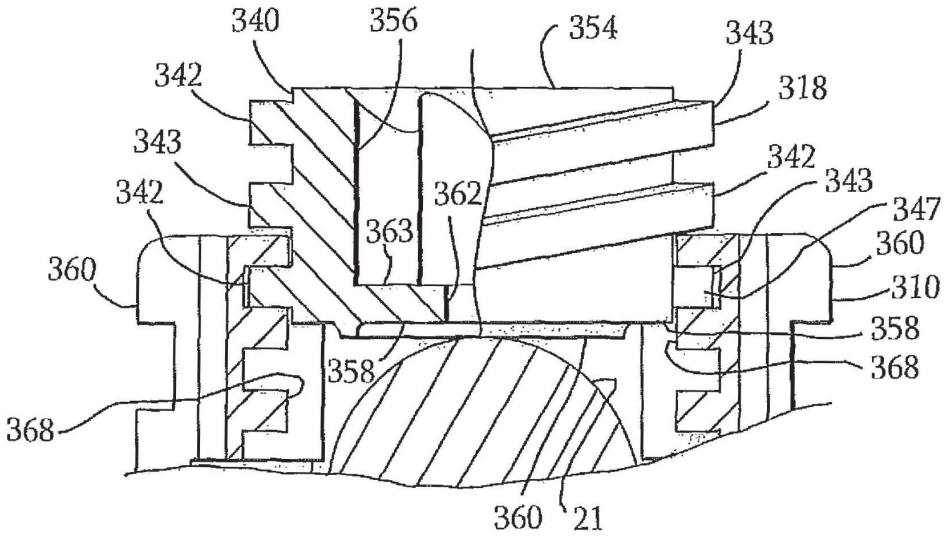
340
356
354
343
342
318
343
342
342
343
362
347
363
360
360
310
358
358
368
368
360
21

Fig. 12.

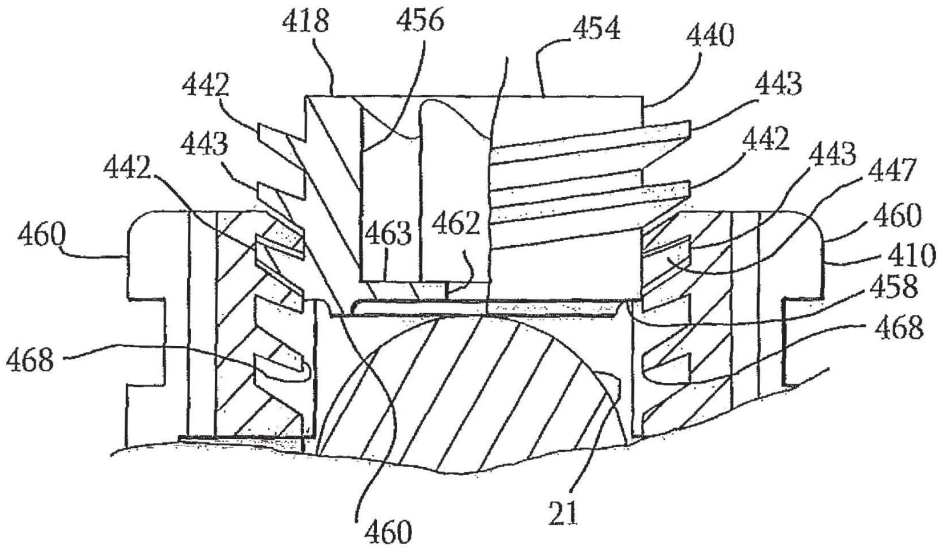
418
456
454
440
442
443
443
442
442
443
447
460
463
462
460
410
458
468
468
460
21

Fig. 13.

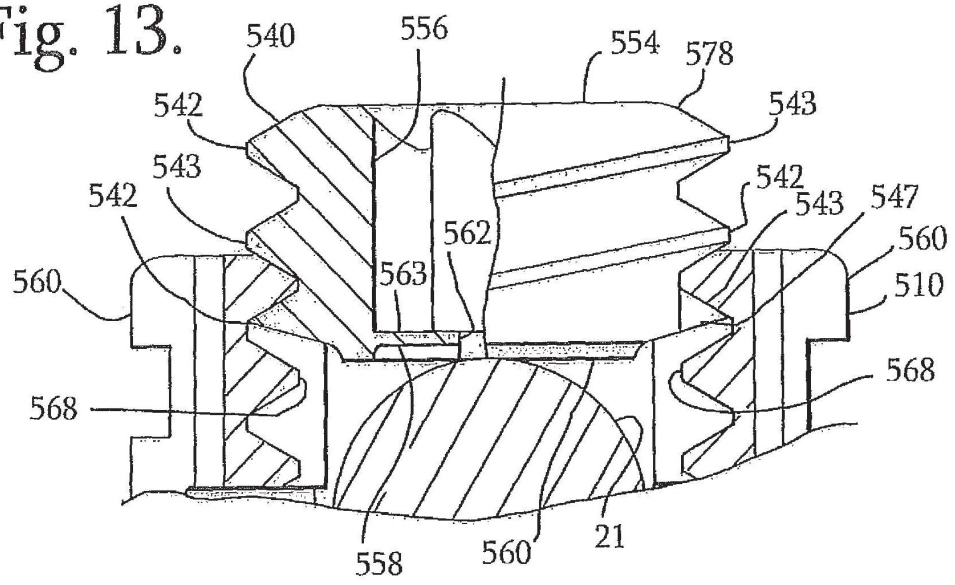
540
556
554
578
542
543
543
542
542
543
547
562
560
563
560
510
568
568
558
560
21

Fig. 14.

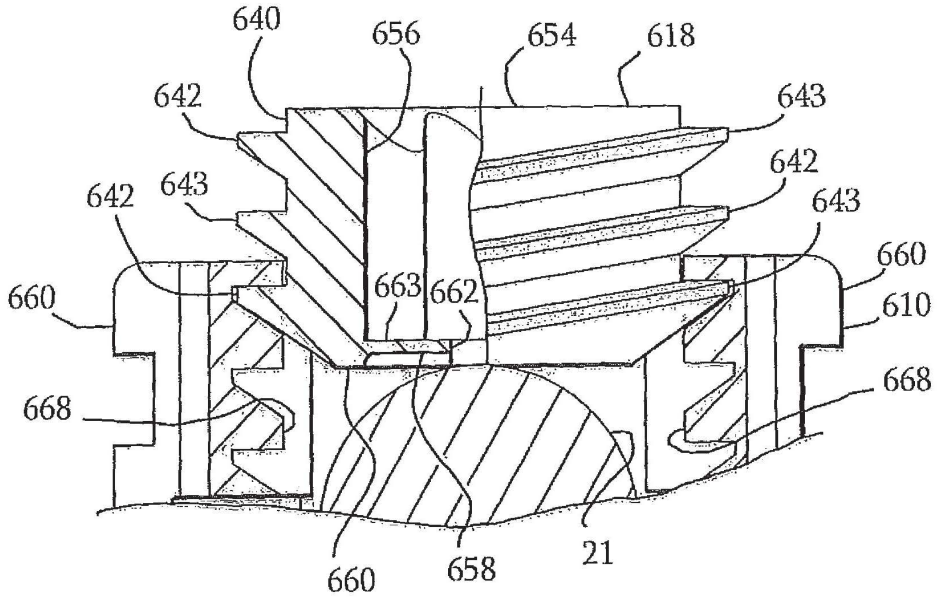
640
656
654
618
642
643
642
643
642
643
660
663
662
660
610
668
668
660
658
21

Fig. 15.

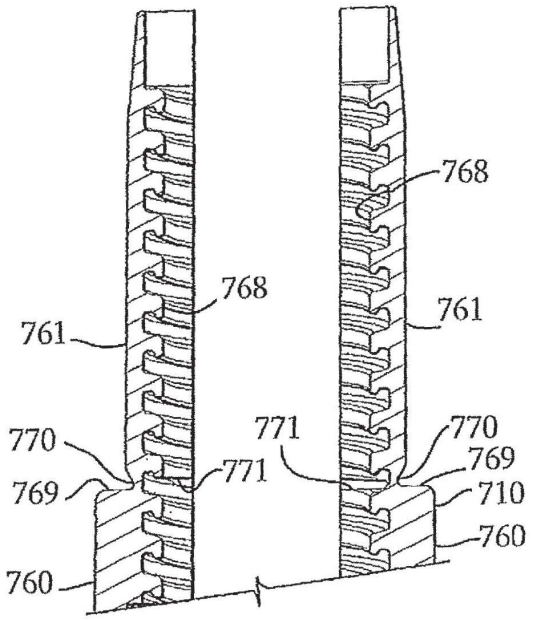

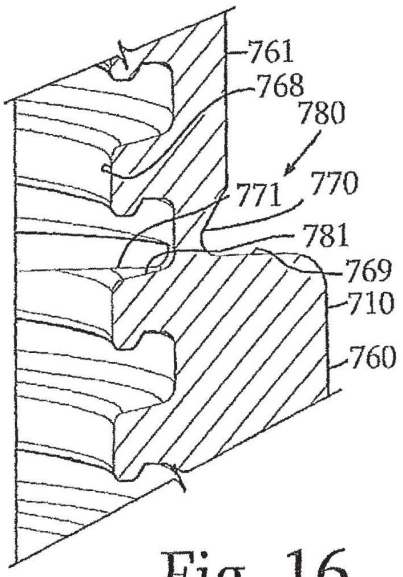

Fig. 16.

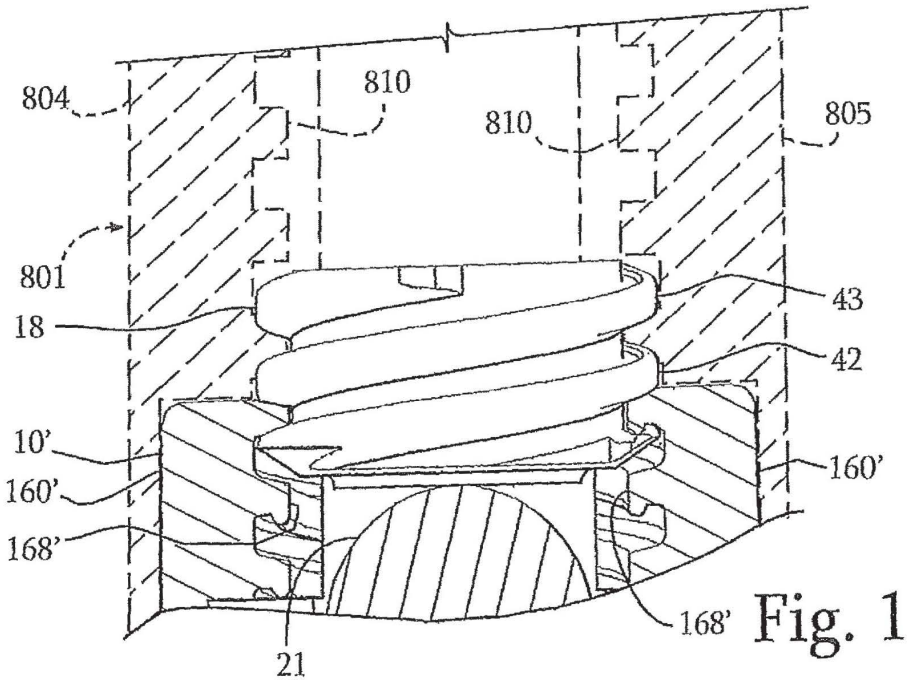

Fig. 17.

MEDICAL IMPLANT RECEIVERS HAVING DUAL LEAD IN CLOSURE MATING THREAD FORMS

CROSS-REFERENCE TO RELATED APPLICATIONS

The present application is a continuation of U.S. patent application Ser. No. 15/469,076, filed Mar. 24, 2017, which is a continuation of U.S. patent application Ser. No. 14/566,356, filed Dec. 10, 2014, now U.S. Pat. No. 9,636,146, which is a continuation of U.S. patent application Ser. No. 13/694,849, filed Jan. 10, 2013, now U.S. Pat. No. 8,911,479, issued Dec. 16, 2014, which claims the benefit of U.S. Provisional Application No. 61/631,746, filed Jan. 10, 2012 and U.S. Provisional Application No. 61/634,361, filed Feb. 28, 2012, all of which are incorporated by reference herein for all purposes.

BACKGROUND OF THE INVENTION

The present invention is directed to structure for joining together parts of a medical implant, in particular to closure mechanisms for use with open bone anchors in spinal surgery, and in some embodiments thereof, for use with spinal bone anchors such as polyaxial screws.

Bone anchors, such as bone screws and hooks are utilized in many types of spinal surgery in order to secure various implants to vertebrae along the spinal column for the purpose of stabilizing and/or adjusting spinal alignment. For example, the most common mechanism for providing vertebral support is to implant bone screws into certain bones which then in turn support a rod or are supported by the rod. Although both closed-ended and open-ended bone anchors are known, open-ended anchors are particularly well suited for connections to longitudinal connecting members such as hard, soft or deformable rods, dynamic or elastic connectors and connector arms, because such rods or other connector members do not need to be passed through a closed bore, but rather can be laid or urged into an open channel within a receiver or head of such a bone anchor. Generally, the anchors must be inserted into the bone as an integral unit or a preassembled unit, in the form of a shank or hook and connected pivotal receiver. In some instances, a portion of such a preassembled unit, such as a shank of a polyaxial bone screw assembly, may be independently implanted into bone, followed by push- or pop-on assembly of a receiver portion of the unit.

Typical open-ended bone screws include a threaded shank with a head or receiver having a pair of parallel projecting branches or arms which form a yoke with a U-shaped slot or channel to receive a rod or other longitudinal connecting member. Hooks and other types of connectors, as are used in spinal fixation techniques, may also include similar open ends for receiving rods or portions of other fixation and stabilization structure. The open-ended head or rod receiver portion of such implants typically includes a pair of spaced arms forming a channel closed by a closure member after the rod or other longitudinal connecting member is placed in the channel. Known closures include slide-on types, twist-on varieties that are rotated ninety degrees to a locked in position, and a variety of single start helically wound guide and advancement structures including, for example, thread forms having v-thread, reverse-angle buttress or square thread forms, to name a few, as well as other non-threadlike

helically wound forms. Sometimes threaded plugs are utilized with outer threaded nuts to prevent splaying of the receiver arms.

As indicated above, the force required to press a closure structure down onto a rod or other connector located between arms of an open implant is considerable. Even though a head or receiver portion of an open polyaxial bone anchor may be pivoted in a direction to make it easier for the arms of the open implant to receive a rod or other connector, spinal misalignments, irregularities and the placement of other surgical tools make it difficult to place the rod or other connector between the arms of the implant while a closure structure is mated with the open implant as well as used to push the rod or other connector downwardly into the implant. For example, when the closure is a cylindrical plug having a single start helically wound guide and advancement structure, such structure must be aligned with mating structure on one of the implant arms and then rotated until a portion of the structure is captured by mating guide and advancement structure on both arms of the implant, all the while the closure is being pressed down on the rod while other forces are pushing and pulling the rod back out of the implant. Integral or mono-axial open implants that cannot be pivoted to receive the rod are even more difficult to manipulate during the initial placement of the rod and initial mating rotation of a closure plug between the spaced, open arms of the implant. Therefore, extraordinary forces are placed on the implant and closure plug while the surgeon either pushes down on the rod or pulls up on the bone to get the rod in position between the implant arms and to initially push down upon the rod with the closure plug.

SUMMARY OF THE INVENTION

A closure structure, top or plug of the invention for insertion between spaced arms of an open medical implant includes one or more helically wound guide and advancement features, each feature having a start surface or structure located at or near a bottom surface of the closure plug, each start structure simultaneously engaging and being captured by each of the spaced arms of the open implant upon initial rotation of the closure structure with respect to the open implant arms. According to an aspect of the invention, a double-start closure is disclosed having two helically wound forms thereon, each form having a start structure for simultaneously engaging a mating helical form on a respective open implant arm. Each time the illustrated duel- or double-start closure plug is rotated one turn (three hundred sixty degrees) between the implant arms, the closure plug advances axially into the implant and toward the rod by a width of two helical forms. The helically wound forms of the multi-start closure spiral around a cylindrical plug body thereof to an extent that the closure rotates over ninety degrees to fully or substantially receive the entire closure plug between the arms of the open implant. The illustrated closure is sized for at least one complete rotation (three hundred sixty degrees) of the plug with respect to the open implant to substantially receive the plug between the implant arms. Multi-start closures of the invention may have two or more coarse or fine helical forms, resulting in fewer or greater forms per axial distance spiraling about the closure plug body and thus resulting in plugs that rotate less (when more coarse) or more (when thin or fine) than one complete rotation to be fully received between the implant arms, typically, at least a ninety-one degree rotation is preferred.

An illustrated multi-start closure and mating open implant is in the form of non-threaded, interlocking flange forms.

Also disclosed are multi-start closure structures provided with helically wound forms of other geometry, including, but not limited to helically wound threads such as reverse angle, buttress, square and v-threads. The multi-start closure may be cannulated for minimally invasive surgical applications.

Another illustrated multi-start closure embodiment of the invention is shown with a bone screw assembly having an open receiver with a pair of opposed arms, each arm having guide and advancement structure for simultaneous mating engagement with a start of the helically wound multi-start closure. A further embodiment according to the invention includes an open bone anchor receiver having integral upwardly extending break-off tabs that also have the guide and advancement structure for mating with the multi-start closure. A further embodiment includes an attachable/detachable guide tool cooperating with such a multi-start open receiver, the tool having inner guide and advancement structures located near a bottom thereof for rotatably and matingly receiving the multi-start closure and being synchronized with the receiver guide and advancement structure for rotating and driving the multi-start closure downward from the guide tool to the receiver.

Objects of the invention further include providing apparatus and methods that are easy to use and especially adapted for the intended use thereof and wherein the tools are comparatively inexpensive to produce. Other objects and advantages of this invention will become apparent from the following description taken in conjunction with the accompanying drawings wherein are set forth, by way of illustration and example, certain embodiments of this invention.

The drawings constitute a part of this specification and include exemplary embodiments of the present invention and illustrate various objects and features thereof.

BRIEF DESCRIPTION OF THE DRAWINGS

FIG. **1** is a perspective view of an embodiment of a multi-start closure according to the invention.

FIG. **2** is another perspective view of the multi-start closure of FIG. **1**.

FIG. **3** is a front elevational view of the closure of FIG. **1** shown with a portion of a receiver of a polyaxial bone screw according to FIG. **8**, the receiver shown in partial front elevation with portions broken away to show the detail thereof, and further showing a rod being pressed upon by the closure, the rod also in partial front elevation with portions broken away to show the detail thereof.

FIG. **4** is a reduced top plan view of the closure of FIG. **1**.

FIG. **5** is a reduced bottom plan view of the closure of FIG. **1**.

FIG. **6** is an enlarged front elevational view of the closure of FIG. **1** with portions broken away to show the detail thereof.

FIG. **7** is a reduced cross-sectional view taken along the line **7-7** of FIG. **6**.

FIG. **8** a partial front elevational view of an open bone screw assembly, with portions broken away to show the detail thereof, including a receiver, a shank, a compression insert and also shown in engagement with the closure top of FIG. **1** (in reduced view) and a longitudinal connecting member in the form of a hard rod.

FIG. **9** is a front elevational view of an alternative closure of an embodiment of the invention, similar to the closure of FIG. **1**, but including a break-off head, the alternative closure shown with a portion of a receiver of the polyaxial bone screw of FIG. **8** shown in enlarged and partial front elevation with portions broken away to show the detail thereof, and further showing a rod being pressed upon by the alternative closure, the rod also in partial front elevation with portions broken away to show the detail thereof.

FIG. **10** is another front elevational view of the closure of FIG. **9** with portions broken away to show the detail thereof.

FIG. **11** is a front elevational view of an alternative square-thread closure of an embodiment of the invention with portions broken away to show the detail thereof, the closure shown with a portion of a receiver of the polyaxial bone screw of FIG. **8** shown in enlarged and partial front elevation with portions broken away to show the detail thereof, and further showing a rod being pressed upon by the alternative closure, the rod also in partial front elevation with portions broken away to show the detail thereof.

FIG. **12** is a front elevational view of an alternative reverse angle closure of an embodiment of the invention with portions broken away to show the detail thereof, the closure shown with a portion of a receiver of the polyaxial bone screw of FIG. **8** shown in enlarged and partial front elevation with portions broken away to show the detail thereof, and further showing a rod being pressed upon by the alternative closure, the rod also in partial front elevation with portions broken away to show the detail thereof.

FIG. **13** is a front elevational view of an alternative v-thread closure embodiment of the invention with portions broken away to show the detail thereof, the closure shown with a portion of a receiver of the polyaxial bone screw of FIG. **8** shown in enlarged and partial front elevation with portions broken away to show the detail thereof, and further showing a rod being pressed upon by the alternative closure, the rod also in partial front elevation with portions broken away to show the detail thereof.

FIG. **14** is a front elevational view of an alternative buttress-thread closure embodiment of the invention with portions broken away to show the detail thereof, the closure shown with a portion of a receiver of the polyaxial bone screw of FIG. **8** shown in enlarged and partial front elevation with portions broken away to show the detail thereof, and further showing a rod being pressed upon by the alternative closure, the rod also in partial front elevation with portions broken away to show the detail thereof.

FIG. **15** is a partial front elevational view of an embodiment of a multi-start open bone anchor receiver of an embodiment of the invention with portions broken away to show the detail thereof, the receiver including break-off tabs.

FIG. **16** is an enlarged and partial front elevational view of the receiver of FIG. **15** with portions broken away to show the detail thereof.

FIG. **17** is a partial front elevational view of an embodiment of a bone anchor receiver having a guide and advancement structure that matingly cooperates with the multi-start closure of FIG. **1**, also shown in front elevation, the receiver having portions broken away to show the detail thereof, and further shown with a guide tool, shown in phantom, the guide tool having a multi-start guide and advancement structure receiving inner surface synchronized with the bone anchor receiver guide and advancement structure.

DETAILED DESCRIPTION OF THE INVENTION

As required, detailed embodiments of the present invention are disclosed herein; however, it is to be understood that the disclosed embodiments are merely exemplary of the invention, which may be embodied in various forms. There-

fore, specific structural and functional details disclosed herein are not to be interpreted as limiting, but merely as a basis for the claims and as a representative basis for teaching one skilled in the art to variously employ the present invention in virtually any appropriately detailed structure. It is also noted that any reference to the words top, bottom, up and down, and the like, in this application refers to the alignment shown in the various drawings, as well as the normal connotations applied to such devices, and is not intended to restrict positioning of the bone attachment structures in actual use.

Furthermore, the terms lead, pitch and start, as such terms are used to describe helically wound guide and advancement structures, are to be understood as follows: Lead is a distance along the axis of a closure plug that is covered by one complete rotation (360 degrees) of the closure plug with respect to a mating open implant. Pitch is the distance from a crest (or outer point or location) of one guide and advancement structure form to the next. For example in a single-start thread-form, such as a single start, helically wound v-thread closure plug, lead and pitch are the same. Single start means that there is only one ridge or helically wound form wrapped around a cylindrical core, or in the case of the present invention, wrapped around a cylindrical closure plug body and thus there is only one start structure or surface at a base or forward end of the closure body that initially engages a mating structure on the open implant. Each time a single start closure rotates one turn (360 degrees), the closure has advanced axially by a width of one ridge or one helical form. Double-start means that there are two ridges or forms wrapped around a core body and thus there are two starting surfaces or structures on the closure plug. Therefore, each time a double-start body rotates one turn (360 degrees), such a body has advanced axially by a width of two ridges or forms. Multi-start means that there are at least two and may be up to three or more of such ridges or forms wrapped around a core body.

With reference to FIGS. **1-8**, and in particular to FIG. **8**, the reference number **1** generally represents an open implant in the form of a polyaxial bone screw apparatus or assembly that cooperates with an illustrated closure structure **18** embodiment of the invention. The bone screw assembly **1** is described in detail in U.S. Provisional Patent Application No. 61/631,746 filed Jan. 10, 2012 and incorporated by reference herein (hereafter the '746 application) and therefore will not be described in great detail herein. The description set forth in the '746 application includes a more detailed explanation of all the components referenced in FIG. **8**. It is noted that multi-start closure embodiments of the invention, such as the closure **18** may be used with a variety of open implants including, but not limited to a wide variety of polyaxial screws, mono-axial or fixed screws, hooks and other types of open implants requiring a plug or closure mechanism to fix a rod or other implant member to a vertebra or other bone. Thus, the assembly **1** is only one example of how multi-start closures of the invention may be used.

Briefly, the illustrated assembly **1** includes a shank **4** with an upwardly extending upper portion or capture structure **8**; an open receiver **10**; a retaining structure or retainer (not shown) that pivots with the shank **4**, a compression or pressure insert **14** and the multi-start closure structure or plug **18** in the form of a cylindrical plug having a double-start helically wound flange-form. The closure structure **18** presses against and captures a longitudinal connecting member, for example, a rod **21** which in turn engages the compression insert **14** that presses against the shank upper portion **8** that is attached to the retaining structure that in turn presses against an inner surface of the receiver **10**, so as to capture and fix the longitudinal connecting member **21** within the receiver **10** and thus fix the member **21** relative to a vertebra (not shown). The illustrated receiver **10** and the shank **4** cooperate in such a manner that the receiver **10** and the shank **4** can be secured at any of a plurality of angles, articulations or rotational alignments relative to one another and within a selected range of angles both from side to side and from front to rear, to enable flexible or articulated engagement of the receiver **10** with the shank **4** until both are locked or fixed relative to each other near the end of an implantation procedure.

The illustrated rod **21** is hard, stiff, non-elastic and cylindrical, having an outer cylindrical surface **22**. However, in other embodiments, the rod **21** may be elastic, deformable and/or of a different cross-sectional geometry. The rod **21** may be made from a variety of metals, metal alloys and deformable and less compressible plastics, including, but not limited to rods made of elastomeric, polyetheretherketone (PEEK) and other types of materials, such as polycarbonate urethanes (PCU) and polyethylenes. Furthermore, in lieu of a rod, longitudinal connecting members for use with the assembly **1** may take a variety of shapes, and/or may include a tensioned cord as described in greater detail in the '746 application that is incorporated by reference herein.

It is noted that the receiver **10** includes guide and advancement structures **168** that are shown as interlocking flange forms described in greater detail in applicant's U.S. Pat. No. 6,726,689, also incorporated by reference herein. Alternately, when the closure structure includes a different helical form, the receiver cooperating structures (e.g., **168**) must also be of a cooperating, mating geometry, such as a square-shaped thread receiving form, a buttress thread receiving form, a reverse angle thread receiving form or other thread-like or non-thread-like helically wound discontinuous advancement structure receiving forms for operably guiding under rotation and advancing a multi-start closure structure downward between the receiver arms **160**, as well as eventual torquing when the closure structure abuts against the rod **21** or other connecting member.

With particular reference to FIGS. **1-7**, the illustrated multi-start closure structure **18** is a double start closure having a substantially cylindrical plug body **40** having an axis of rotation that is the same as that of the receiver **10** and including a helically wound guide and advancement structure in the form of a pair of helically wound forms **42** and **43**, each illustrated as an interlocking flange form that operably joins with mating flange form guide and advancement structures **168** disposed on the arms of the receiver **10**. The form **42** includes a start surface or structure **46** and the form **43** includes a start surface or structure **47**. Each helically wound form **42** and **43** may take a variety of forms and geometries, including those described in Applicant's U.S. Pat. No. 6,726,689, which is incorporated by reference herein. It is noted (and also described in greater detail subsequently herein) that each of the closure structure guide and advancement structures or forms **42** and **43** could alternatively be in the form of a buttress thread, a square thread, a reverse angle thread, a v-thread or other thread like or non-thread like helically wound advancement structures, for operably guiding under rotation and advancing the closure structure downward between the arms of the receive **10** and preferably having such a nature as to resist splaying of the receiver arms when the closure structure **18** is advanced into the receiver channel. The specific flange forms **42** and **43** illustrated in FIGS. **1-7**, as well as accept-

able alternative locking forms, are described in detail in Applicant's U.S. Pat. No. 6,726,689, incorporated by reference herein, and thus shall not be discussed further herein. Such interlocking flange forms are preferred as the added strength provided thereby beneficially cooperate with and counter any reduction in strength caused by the any reduced profile of the receiver **10** that may more advantageously engage longitudinal connecting member components.

The illustrated closure structure **18** also includes a top surface **54** with an internal drive **56** in the form of an aperture that is illustrated as a star-shaped internal drive such as that sold under the trademark TORX, or may be, for example, a hex drive, or other internal drives such as slotted, tri-wing, spanner, two or more apertures of various shapes, and the like. A driving tool (not shown) sized and shaped for engagement with the internal drive **56** is used for both rotatable engagement and, if needed, disengagement of the closure **18** from the receiver **10** at arms **160**. A base or bottom surface **58** of the closure is planar and further includes a rim **60** for engagement and penetration into the surface **22** of the rod **21** in certain embodiments of the invention. The closure top **18** further includes a cannulation through bore **62** extending along a central axis thereof and through a drive base surface **63** and the bottom surface **58** thereof. Such a through bore provides a passage through the closure **18** interior for a length of wire (not shown) inserted therein to provide a guide for insertion of the closure top into the receiver arms **160**.

The closure structure **18** helically wound flange form start structures **46** and **47** of the respective forms **42** and **43** are located on opposite sides of the closure plug body **40** and are both located adjacent the bottom surface **58**. As illustrated in FIG. **3**, for example, when the closure structure **18** is rotated into the receiver **10** between receiver arms **160**, each having a guide and advancement structure **168**, the start **46** engages mating guide and advancement structure **168** on one arm **160** and the start **47** simultaneously engages guide and advancement structure **168** on the opposing arm **160**, both forms **42** and **43** being simultaneously captured by the mating forms **168** on the opposed arms **160**. As the structure **18** is rotated, the structure advances axially downwardly between the arms **160** and presses evenly down upon the captured rod **21**. Each time the illustrated duel- or double-start closure plug **18** is rotated one complete turn or pass (three hundred sixty degrees) between the implant arms, the closure plug **18** advances axially into the implant and toward the rod by a width of two helical flange forms. The illustrated closure **18** is sized for at least one complete rotation (three hundred sixty degree) of the plug **18** with respect to the receiver **10** open arms **160** to substantially receive the plug between the implant arms. Each of the start structures **46** and **47** includes a leading face having at least one curvate surface. The at least one curvate surface includes at least one radius of curvature. In one embodiment, the at least one curvate surface is both concave and convex. Multi-start closures of the invention may have two or more coarse or fine helical forms, resulting in fewer or greater forms per axial distance spiraling about the closure plug body and thus resulting in plugs that rotate less or more than one complete rotation to be fully received between the implant arms. Preferably, helically wound forms of the multi-start closure of the invention are sized so as to spiral around a cylindrical plug body thereof to an extent that the closure rotates at least ninety-one degrees to fully or substantially receive the closure plug between the arms of the bone screw receiver or other open implant. Particularly preferred guide and advancement structures are sized for at least one complete turn or pass (three-hundred sixty degree) of the closure between the receiver **10** arms and as many as two to three rotations to be fully received between implant arms.

In use, the receiver **10**, the retainer **12** and the compression insert **14** are assembled with the shank **4** either before or after the shank is implanted into a vertebra, and the resulting assembly **1** is ultimately attached to the rod **21** or other longitudinal connecting member as described in the '746 application incorporated by reference herein. It is noted that the shank **4** and other bone screw assembly parts, the rod **21** (also having a central lumen in some embodiments) and the closure top **18** having the central bore **62** can be inserted in a percutaneous or minimally invasive surgical manner, utilizing guide wires. After the rod **21** or other longitudinal connecting member is positioned in an open or percutaneous manner in cooperation with the at least two bone screw assemblies **1** (or other open implants), the closure structure **18** is then inserted into and advanced between the arms **160** of each of the receiver **10**. The closure structure **18** is rotated, using a tool engaged with the inner drive **56** until a selected pressure is reached at which point the rod **21** engages a U-shaped seating surface of the compression insert **14**, further pressing the insert against the shank upper portion **8** and attached retainer into locked frictional engagement with the receiver **10**. Prior to locking the insert **14** against the shank head **8**, the shank **4** may be pivoted to a plurality of potentially desirable positions with respect to the receiver **10**, followed by locking of the polyaxial mechanism by fully mating the multi-start closure top **18** with the receiver **10**. Different angular or articulated positions of the shank **4** with respect to the receiver **10** are shown in the '746 application incorporated by reference herein.

With specific reference to FIGS. **3** and **8**, as the multi-start closure structure **18** rotates and moves downwardly into the respective receiver **10**, the rim **60** engages and penetrates the rod surface **22**, the closure structure **18** pressing downwardly against and biasing the rod **21** into compressive engagement with the insert **14** that urges the shank upper portion **8** and attached retainer into locking engagement with the receiver, the retainer outer surface frictionally abutting an inner spherical seating surface of the receiver **10**. For example, about 80 to about 120 inch pounds of torque on the closure top may be applied for fixing the bone screw shank **6** with respect to the receiver **10**. Also, for example, when the shank **4** is disposed at an angle with respect to the receiver **10**, a part of the shank upper portion **8** may also be in frictional engagement with a portion of the receiver spherical seating surface.

If removal of the rod **21** from any of the bone screw assemblies **1** is necessary, or if it is desired to release the rod **21** at a particular location, disassembly is accomplished by using the driving tool (not shown) that mates with the internal drive **56** on the closure structure **18** to rotate and remove such closure structure from the cooperating receiver **10**. Disassembly is then accomplished in reverse order to the procedure described previously herein for assembly.

With reference to FIGS. **9** and **10**, an alternative closure top **18'** is shown that is almost identical to the closure top **18**. However, the top **18'** differs from the top **18** in that the top **18'** includes a break-off head **70'** that further includes a top surface **72'** having tooling notches **73'**, an outer faceted driving surface **74'**, illustrated as having a hex-shaped profile, and an inner bore **76'**. Otherwise, the closure top **18'** includes a body **40'**, a first helical form **42'**, a second helical form **43'**, a body top surface **54'**, a body internal drive **56'**, a base **58'**, a rim **60'**, a cannulation bore **62'** and a drive base surface **63'** that is the same or substantially similar to the

respective body **40**, first helical form **42**, second helical form **43**, body top surface **54**, internal drive **56**, base **58**, rim **60**, cannulation bore **62** and drive base surface **63** previously described herein with respect to the closure top **18**. The break-off head **70'** is integral with the body **40'** at the body top surface **54'**. The inner bore **76'** communicates with the inner drive **56'** and the cannulation bore **62'**. The break-off head **70'** is designed to allow such head **70'** to break from the body **40'** at or near the top surface **54'** at a preselected torque, for example, 70 to 140 inch pounds, when a hex-shaped tool (not shown) engages the outer surfaces **74'** and drives the closure structure **18'** into the receiver **10** as shown in FIG. **9**. The inner drive **56'** is used for disassembly or loosening of the closure **18'** from the receiver **10**, and re-tightening, if needed.

With reference to FIG. **11**, another alternative multi-start closure top **318** is shown that is almost identical to the closure top **18** with the exception that the two flange forms **42** and **43** with respective starts **46** and **47** have been replaced with square threads **342** and **343** with respective starts **346** (not shown) and **347**. Otherwise, the dual or double start closure top **318** includes a body **340**, a body top surface **354**, a body internal drive **356**, a base **358**, a rim **360'**, a cannulation bore **362** and a drive base surface **363** that is the same or substantially similar to the respective body **40**, body top surface **54**, internal drive **56**, base **58**, rim **60**, cannulation bore **62** and drive base surface **63** previously described herein with respect to the closure top **18**. In FIG. **11**, the closure top **318** is shown partially wound into a polyaxial bone screw receiver **310** having opposed arms **360** with inner surfaces equipped with guide and advancement structures **368** that are sized and shaped to simultaneously closely receive and mate with the square threads **342** and **343** of the double closure structure **318**. Otherwise, the receiver **310** is identical or substantially similar to the receiver **10** described in detail in the '746 application incorporated by reference herein.

With reference to FIG. **12**, an alternative multi-start closure top **418** is shown that is almost identical to the closure top **18** with the exception that the two flange forms **42** and **43** with respective starts **46** and **47** have been replaced with reverse angle threads **442** and **443** with respective starts **446** (not shown) and **447**. Otherwise, the dual or double start closure top **418** includes a body **440**, a body top surface **454**, a body internal drive **456**, a base **458**, a rim **460'**, a cannulation bore **462** and a drive base surface **463** that is the same or substantially similar to the respective body **40**, body top surface **54**, internal drive **56**, base **58**, rim **60**, cannulation bore **62** and drive base surface **63** previously described herein with respect to the closure top **18**. The closure top **418** is shown partially wound into a polyaxial bone screw receiver **410** having opposed arms **460** with inner surfaces equipped with guide and advancement structures **468** that are sized and shaped to simultaneously closely receive and mate with the reverse angle threads **442** and **443** of the double start closure structure **418**. Otherwise, the receiver **410** is identical or substantially similar to the receiver **10** described in detail in the '746 application incorporated by reference herein.

With reference to FIG. **13**, another alternative multi-start closure top **518** is shown that is almost identical to the closure top **18** with the exception that the two flange forms **42** and **43** with respective starts **46** and **47** have been replaced with v-threads **542** and **543** with respective starts **546** (not shown) and **547**. Otherwise, the dual or double start closure top **518** includes a body **540**, a body top surface **554**, a body internal drive **556**, a base **558**, a rim **560'**, a cannulation bore **562** and a drive base surface **563** that is the same or substantially similar to the respective body **40**, body top surface **54**, internal drive **56**, base **58**, rim **60**, cannulation bore **62** and drive base surface **63** previously described herein with respect to the closure top **18**. The closure top **518** is shown partially wound into a polyaxial bone screw receiver **510** having opposed arms **560** with inner surfaces equipped with guide and advancement structures **568** that are sized and shaped to simultaneously closely receive and mate with the threads **542** and **543** of the double start closure structure **518**. Otherwise, the receiver **510** is identical or substantially similar to the receiver **10** described in detail in the '746 application incorporated by reference herein.

With reference to FIG. **14**, another alternative multi-start closure top **618** is shown that is almost identical to the closure top **18** with the exception that the two flange forms **42** and **43** with respective starts **46** and **47** have been replaced with buttress threads **642** and **643** with respective starts **446** and **447** (not shown). Otherwise, the dual or double start closure top **618** includes a body **640**, a body top surface **654**, a body internal drive **656**, a base **658**, a rim **660'**, a cannulation bore **662** and a drive base surface **663** that is the same or substantially similar to the respective body **40**, body top surface **54**, internal drive **56**, base **58**, rim **60**, cannulation bore **62** and drive base surface **63** previously described herein with respect to the closure top **18**. The closure top **618** is shown partially wound into a polyaxial bone screw receiver **610** having opposed arms **660** with inner surfaces equipped with guide and advancement structures **668** that are sized and shaped to simultaneously closely receive and mate with the buttress threads **642** and **643** of the double start closure structure **618**. Otherwise, the receiver **610** is identical or substantially similar to the receiver **10** described in detail in the '746 application incorporated by reference herein.

With reference to FIGS. **15** and **16**, an open receiver **710** is illustrated that is substantially similar to the receiver **10** previously described herein with the exception that the receiver **710** includes opposed arms **760**, each having an integral upstanding break-off extension **761**. Each receiver arm **760** and integral extension **761** has an inner helically wound guide and advancement structure **768** that is sized and shaped to mate with the flange forms **42** and **43** of the dual start closure **18** previously described herein. The break-off extensions **761** are initially integral with the respective arms **760** and are then broken off by a user after the closure **18** has been rotatingly advanced along the arm extensions **761** and into the channel located between the receiver arms **760**. In the illustrated embodiment, in addition to an outer groove or notch **770** located at or near a top surface **769** of each of the arms **760** where the extensions **761** break off from the receiver arms, illustrated inner arm surfaces include a recess or cut **771**, best shown in FIG. **16**, that runs substantially horizontally. Each recess **771** is curved and elongate and disposed somewhat cross-wise or transverse to the respective flange form **768**. For example, with reference to the arm **760** shown in FIG. **16**, the recess **771** cuts into a weakened region, generally **780**, where the arm **760** joins with the respective attached adjacent extension **761**, the curved and elongate recess **771** beginning at a lower portion or location **781** of the flange form recess or segment and terminating at an opposed upper end location of the flange form segment, while otherwise leaving the flange form **768** intact. Stated in another way, the substantially horizontally extending recess **771** cuts into both a lead portion and a trailing portion of each of the flange form segments located near and directly above the opposed arms **760** and substan-

tially opposite the notch **770**, thus further weakening the region where the extension and the arm attach, without destroying the flange form path, so that the closure **18** is not derailed by the recess **771** or otherwise prohibited from moving downwardly into the receiver channel formed between the receiver arms **760**.

With reference to FIG. **17**, the multi-start closure **18** is shown cooperating with a spinal implant receiver, such as a bone screw receiver **10'** and a discrete, detachable guide tool **801**. The elongate guide tool **801**, only partially shown in FIG. **17**, is typically sized for extending from the bone screw receiver **10'** upwardly to a location outside of a patient, the tool providing a guide channel for operably guiding the rod **21** or other longitudinal connecting member from a position exterior of the bone screw receiver **10'** toward and into the bone screw receiver **10'**. The illustrated guide tool has opposed arms **805**, each arm having a helical guide and advancement structure **810** thereon that is illustrated as a square thread form, but may be of other geometry, including a flange form the same or similar to the flange forms **168'** of the receiver **10'** that mates with the flange forms **42** and **43** of the closure structure **18**. Thus, the illustrated structures **810** are sized and shaped for receiving and rotating engagement with a dual start closure. The closure **18** is shown partially wound into the receiver **10'** that is identical or substantially similar to the receiver **10** with the exception of certain outer arm surface features (not shown). Thus, the receiver **10'** includes opposed arms **160'** with inner surfaces having guide and advancement structures **168'** that are sized and shaped to simultaneously closely receive and mate with the flange forms **42** and **43** of the dual start closure structure **18**. The guide tool **801** includes attachment structure for detachable attachment to the receiver **10'** (not shown), that may take a variety of forms and methods, including, but not limited to a slide-on, slide-off attachment, a snap-on, rotate off attachment, a rotate-on and rotate-off attachment, to name a few. For example, cooperating attachment structure for both the tool and the receiver may be used that is disclosed in U.S. Pat. No. 7,470,279 and incorporated by reference herein. Returning to the inner helically wound guide and advancement structure **810** formed on each arm **804** of the guide tool **801**, the structure **810** is sized and shaped for being aligned with the receiver arms **160'** during removable attachment of the tool **801** with the respective bone screw receiver **10'** so as to continue the helical pathway for the closure **18**, the structures **810** being synchronized with the flange forms **168'** to allow for the rotation and driving transfer of the closure **18** from the tool **801** into the receiver **10'**.

It is to be understood that while certain forms of the present invention have been illustrated and described herein, it is not to be limited to the specific forms or arrangement of parts described and shown.

The invention claimed is:

1. A medical implant assembly comprising:

a receiver having a first arm and a second arm spaced apart from each other by a channel, the first arm and the second arm each having a top surface and an inner surface having a first thread on the first arm and a second thread on the second arm comprising discontinuously helically wound threads being symmetrically and diametrically opposed to each other and extending up to the top surface on each arm, the opposed discontinuously helically wound threads forming a dual lead in closure starting arrangement for the receiver;

a closure having a longitudinal axis with an outer surface having a first continuously helically wound thread form and a second continuously helically wound thread form, the first continuously helically wound thread form having a first start structure with a leading face surface extending below a first upper loading surface disposed between a root and a crest of the first continuously helically wound thread form, the second continuously helically wound thread form having a second start structure with a leading face surface extending below a second upper loading surface disposed between a root and a crest of the second continuously helically wound thread form, the leading face surface on each of the first start structure and the second start structure including at least one curvate surface;

the channel positioned between the first arm and the second arm and opening onto the top surface, the channel adapted to receive a longitudinal connecting member, the channel closeable with the closure having an axis of rotation;

the first discontinuously helically wound thread form on the inner surface of the first arm having a first lower loading surface, the first start structure being rotatably advanceable under the first discontinuously helically wound thread form and the first lower loading surface being mateable with the first upper loading surface; and

the second discontinuously helically wound thread form on the inner surface of the second arm having a second lower loading surface, the second start structure being rotatably advanceable under the second discontinuously helically wound thread form and the second lower loading surface being mateable with the second upper loading surface, a rotation of the closure about the axis of rotation between the first arm and the second arm causing a simultaneous advancement of the first start structure under the first discontinuously helically wound thread form and the second start structure under the second discontinuously helically wound thread form and a mating of the first and second lower loading surface with the first and second upper loading surface, respectively, the closure rotationally advanceable within the channel until the closure locks the longitudinal connecting member within the channel.

2. The medical implant assembly of claim **1**, further comprising:

a guide tool having a first guide arm and a second guide arm detachably attached to the receiver;

a third discontinuously helically wound thread form on the first guide arm; and

a fourth discontinuously helically wound thread form on the second guide arm, the first start structure threadably engageable with the third discontinuously helically wound thread form simultaneously with the second start structure threadably engageable with the fourth discontinuously helically wound thread form when the closure is rotated between the first guide arm and the second guide arm, the third discontinuously helically wound thread form and the fourth discontinuously helically wound thread form adapted to transfer the closure between the guide tool and the receiver.

3. The medical implant assembly of claim **1**, wherein the first continuously helically wound thread form and the second continuously helically wound thread form are each flange forms.

4. The medical implant assembly of claim **1**, wherein the first continuously helically wound thread form and the second continuously helically wound thread form are each one of: v-threads, square threads, reverse angle threads, or buttress threads.

5. The medical implant assembly of claim **1**, wherein the first start structure is disposed at a diametrically opposite location on the closure from the second start structure.

6. The medical implant assembly of claim **1**, wherein each of the continuously first and the second helically wound thread form is disposed at a top of the closure, the first helically wound thread form and the second helically wound thread form each extending along the outer surface of the closure to a bottom of the closure and ending at the first and the second start structure, respectively.

7. The medical implant assembly of claim **1**, wherein the at least one curvate surface of both the first start structure and the second start structure is defined by at least one radius of curvature, the at least one radius of curvature being less than a radius of curvature for an outer surface on the crest of the first continuously helically wound thread form.

8. The medical implant assembly of claim **1**, wherein the at least one curvate surface of both the first start structure and the second start structure is defined by at least one radius of curvature, the at least one radius of curvature being less than a radius of curvature for an outer surface on the crest of the second continuously helically wound thread form.

9. The medical implant assembly of claim **1**, wherein the at least one curvate surface includes both a convex surface and concave surface.

10. The medical implant assembly claim of **9**, wherein both of the concave surface and the convex surface of the first start structure are positioned between the root and the crest of the first continuously helically wound thread form, and wherein both of the concave surface and the convex surface of the second start structure are positioned between the root and the crest of the second continuously helically wound thread form.

11. The medical implant assembly of claim **10**, wherein the concave surface is adjacent the root and the convex surface is adjacent the crest of the first and second start structures for the first and second continuously helically wound thread form, respectively.

12. The medical implant assembly of claim **9**, wherein a radius of curvature of the convex surface is substantially equal to a radius of curvature of the concave surface.

13. The medical implant assembly of claim **9**, wherein each of the first start structure and the second start structure includes a bottom beveled surface.

14. The medical implant assembly of claim **1**, wherein the first and second start structure leading face surfaces are at least partially planar surfaces parallel with respect to each other.

15. The medical implant assembly of claim **1**, wherein each of the at least one curvate surfaces is substantially parallel to the closure longitudinal axis.

16. The medical implant assembly of claim **1**, wherein each of the at least one curvate surface includes both a convex surface and concave surface.

17. The medical implant assembly of claim **1**, wherein each of the at least one curvate surfaces is a concave surface.

18. The medical implant assembly of claim **1**, wherein the closure first continuously helically wound thread form includes a first lower surface disposed between the root and the crest and the closure second continuously helically wound thread form includes a second lower surface disposed between the root and the crest, and wherein the leading face surface of the first start structure extends between the first upper surface and the first lower surface and the leading face surface of the second start structure extends between the second upper surface and the second lower surface.

19. The medical implant assembly of claim **18**, wherein each of the leading face surfaces of the first start structure and the second start structure include at least a partial planar surface.

20. The medical implant assembly of claim **1**, wherein the receiver first arm and the second arm top surface each include a breakoff extension with an inner surface having a discontinuously helically wound thread form, the first arm breakoff extension thread form being continuous with the first discontinuously helically wound thread form on the inner surface of the first arm and the second arm breakoff extension thread form being continuous with the second discontinuously helically wound thread form on the inner surface of the second arm.

21. A medical implant assembly comprising:

a receiver having a first arm and a second arm spaced apart from each other by a rod-receiving channel, the first arm and the second arm each having a top surface and an inner surface having a first thread on the first arm and a second thread on the second arm comprising first and second discontinuously helically wound threads, respectively, being symmetrically and diametrically opposed to each other and extending up to the top surface on each arm, the opposed discontinuously helically wound threads forming a dual lead in closure starting arrangement for the receiver;

a closure having a first continuously helically wound thread form and a second continuously helically wound thread form, the first continuously helically wound thread form having a first start structure and a first loading surface extending between a root and a crest of the first continuously helically wound thread form, the second continuously helically wound thread form having a second start structure and a second loading surface extending between a root and a crest of the second continuously helically wound thread form, each of the first start structure and the second start structure having a leading face surface extending below each closure loading surface and including at least a partial concave surface;

the channel being formed by the first arm and the second arm, the channel closeable with the closure having an axis of rotation;

the first discontinuously helically wound thread form on the inner surface of the first arm having a first discontinuous loading surface, the first start structure rotatable under the first discontinuously helically wound thread form and the first discontinuous loading surface mateable with the closure first loading surface; and

the second discontinuously helically wound thread form on the inner surface of the second arm having a second discontinuous loading surface, the second start structure rotatable under the second discontinuously helically wound thread form and the second discontinuous loading surface mateable with the closure second loading surface, a rotation of the closure about the axis of rotation between the first arm and the second arm causing the first start and the second start structures to simultaneously rotatably advance under the first discontinuously helically wound thread form and the second discontinuously helically wound thread form, respectively, the closure rotationally advanceable within the channel until a rod positioned within the channel is locked therein.

22. The medical implant assembly of claim **21**, wherein the closure has a bottom surface that is closed.

23. The medical implant assembly of claim **22**, wherein the bottom surface is flat.

24. The medical implant assembly of claim **21**, wherein the first continuously helically wound thread form and the second continuously helically wound thread form are each one of: v-threads, square threads, reverse angle threads, or buttress threads.

25. The medical implant assembly of claim **21**, wherein the first continuously helically wound thread form and the second continuously helically wound thread form are each flange forms.

26. A medical implant assembly comprising:

a receiver having a first arm and a second arm spaced apart from each other by a rod-receiving channel, the first arm and the second arm each having a top surface and an inner surface having a first thread on the first arm and a second thread on the second arm comprising first and second discontinuously helically wound threads, respectively, being symmetrically and diametrically opposed to each other and extending up to the top surface on each arm, the opposed discontinuously helically wound threads forming a dual lead in closure starting arrangement for the receiver;

a closure having a first continuously helically wound thread form and a second continuously helically wound thread form, each of the first continuously helically wound thread form and the second continuously helically wound thread form being a reverse angle thread, the first continuously helically wound thread form having a first start structure and a first upper loading surface extending between a root and a crest of the first continuously helically wound thread form, the second continuously helically wound thread form having a second start structure and a second upper loading surface extending between a root and a crest of the second continuously helically wound thread form, each of the first start structure and the second start structure having a leading face extending below their respective upper loading surfaces, each leading face including at least a partial concave surface and a partial convex surface;

the channel being formed by the first arm and the second arm opening onto the top surface, the channel adapted to receive a rod, the channel closeable with the closure having an axis of rotation;

the first discontinuously helically wound thread form on the inner surface of the first arm being a reverse angle thread having a first lower loading surface, the first start structure rotatable under the first discontinuously helically wound thread form and the first lower loading surface threadably engageable to the first upper loading surface; and

the second discontinuously helically wound thread form on the inner surface of the second arm being a reverse angle thread having a second lower loading surface, the second start structure rotatable under the second discontinuously helically wound thread form and the second lower loading surface threadably engageable to the second upper loading surface, a rotation of the closure about the axis of rotation between the first arm and the second arm causing a simultaneous mating of the first continuously helically wound thread form with the first discontinuously helically wound thread form and the second continuously helically wound thread form with the second discontinuously helically wound thread form, the closure rotationally advanceable within the channel until the closure locks the rod received within the channel.

27. The medical implant assembly of claim **26**, wherein the concave surface is adjacent the root and the convex surface is adjacent the crest for each of the first and second continuously helically wound thread forms.

28. The medical implant assembly of claim **26**, wherein the first start structure is disposed at a diametrically opposite location on the closure from the second start structure.

* * * * *