US006716214B1

(12) **United States Patent**
Jackson

(10) **Patent No.: US 6,716,214 B1**
(45) **Date of Patent: Apr. 6, 2004**

(54) **POLYAXIAL BONE SCREW WITH SPLINE CAPTURE CONNECTION**

(76) Inventor: **Roger P. Jackson**, 4706 W. 86th St., Prairie Village, KS (US) 66207

(*) Notice: Subject to any disclaimer, the term of this patent is extended or adjusted under 35 U.S.C. 154(b) by 0 days.

(21) Appl. No.: **10/464,633**

(22) Filed: **Jun. 18, 2003**

(51) **Int. Cl.**[7] **A61B 17/70**; A61B 17/84
(52) **U.S. Cl.** **606/61**; 606/73
(58) **Field of Search** 606/60, 61, 62, 606/64, 65, 66, 69, 72, 73; 411/81, 353, 533, 922

(56) **References Cited**

U.S. PATENT DOCUMENTS

5,312,404	A		5/1994	Asher et al.
5,360,431	A	*	11/1994	Puno et al. 606/72
5,429,639	A		7/1995	Judet
5,443,467	A		8/1995	Biedermann et al.
5,466,237	A		11/1995	Byrd, III et al.
5,476,464	A		12/1995	Metz-Stavenhagen et al.
5,591,166	A		1/1997	Bernhardt et al.
5,601,553	A		2/1997	Trebing et al.
5,669,911	A		9/1997	Errico et al.
5,672,176	A		9/1997	Biedermann et al.
5,725,528	A		3/1998	Errico et al.
5,733,286	A		3/1998	Errico et al.
5,800,435	A		9/1998	Errico et al.
5,817,094	A		10/1998	Errico et al.
5,879,350	A		3/1999	Sherman et al.
6,019,759	A		2/2000	Rogozinski
6,063,090	A		5/2000	Schlapfer
6,074,391	A		6/2000	Metz-Stavenhagen et al.
6,077,262	A		6/2000	Schlapfer et al.
6,090,111	A		7/2000	Nichols
6,132,432	A		10/2000	Richelsoph
6,146,383	A		11/2000	Studer et al.
6,187,005	B1		2/2001	Brace et al.
RE37,161	E		5/2001	Michelson et al.
6,224,596	B1		5/2001	Jackson
6,254,602	B1		7/2001	Justis
6,273,888	B1		8/2001	Justis
6,280,442	B1		8/2001	Barker et al.
6,287,308	B1		9/2001	Betz et al.
6,287,311	B1		9/2001	Sherman et al.
6,302,888	B1		10/2001	Mellinger et al.
6,565,565	B1	*	5/2003	Yuan et al. 606/61
2001/0001119	A1		5/2001	Lombardo
2002/0143341	A1		10/2002	Biedermann et al.

FOREIGN PATENT DOCUMENTS

DE	G 92 02 745 8	4/1992
DE	19 07 141 A 1	9/1996
EP	1121902 A2	1/2001

OTHER PUBLICATIONS

EBI Omega 21 Brochure, EBI Spine Systems, pub. 1999.
Claris Instrumentation Brochure, G Med, pub. 1997.

(List continued on next page.)

Primary Examiner—Kevin Shaver
Assistant Examiner—David Comstock
(74) *Attorney, Agent, or Firm*—John C. McMahon

(57) **ABSTRACT**

A polyaxial bone screw having a bone implantable shank, a head and a retaining ring. The retaining ring includes an outer partial hemispherical surface and an inner bore with radially extending channels and partial capture recesses. The shank includes a bone implantable body with an external helical wound thread and an upwardly extending capture structure. The capture structure includes at least one spline which extends radially outward and has a wedged surface that faces radially outward therefrom. The capture structure operably passes through a central bore of the retaining ring while the spline passes through a suitably shaped channel so that the spline becomes positioned above the head at which time the shank is rotated appropriately and the shank is drawn back downwardly so that the spline engages and seats in the capture recess. The head includes an internal cavity having a spherical shaped surface that mates with the ring surface and has a lower restrictive neck that prevents passage of the ring once the ring is seated in the cavity.

25 Claims, 7 Drawing Sheets

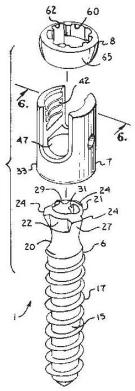

OTHER PUBLICATIONS

VLS System Variable Locking Screw Brochure, Interpore Cross International, pub. 1999.
CD Horizon M8 Multi Axial Screw Spinal System Brochure, Medtronic Sofamore Danek, no publish date.
Contour Spinal System Brochure, Ortho Development, no publish date.
Xia Spinal System Brochure, Stryker Howmedica Osteonics, no publish date.
The Rod Plate System Brochure, Stryker Howmedia Osteonics, pub. Oct., 1999.
Silhouette Spinal Fixation System Brochure, Suizer Medica Spine–Tech, no publish date.
SDRS Surgical Dynamics Rod System Brochure, Surgical Dynamics, pub. 1998–99.
Versalok Low Back Fixation System Brochure, Wright Medical Technology, Inc., pub. 1997.
The Strength of Innovation Advertisement, Blackstone Medical Inc., no publish date.
The Moss Miami 6.0mm System Advertisement, author unknown, no publish date.

* cited by examiner

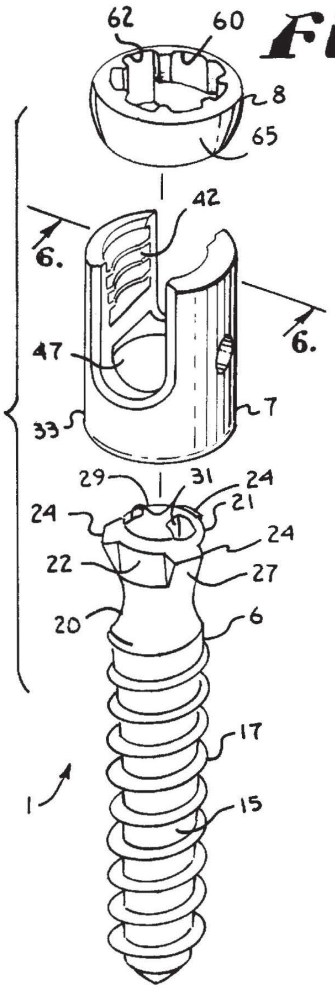

Fig. 1.

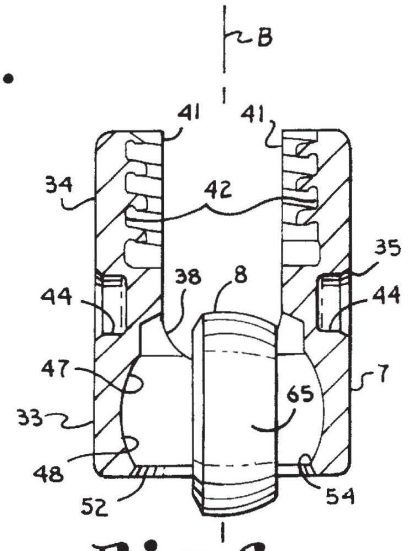

Fig. 6.

Fig. 7.

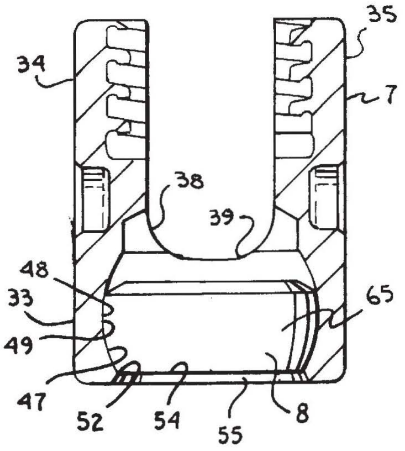

Fig. 2.

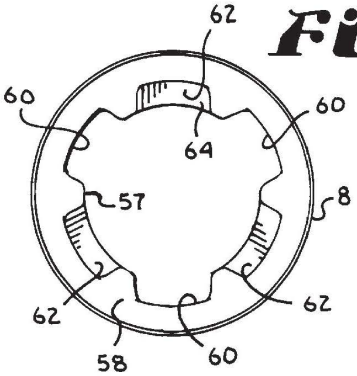

Fig. 3.

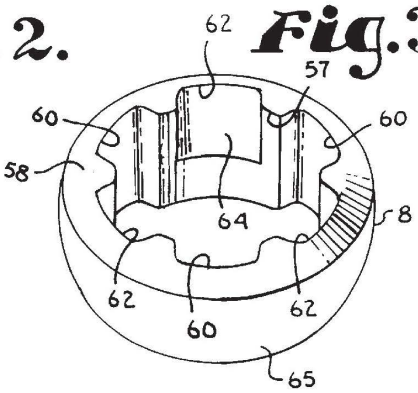

Fig. 4.

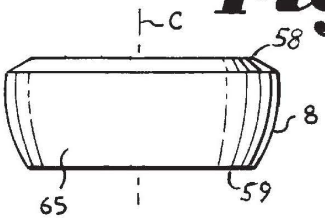

Fig. 5.

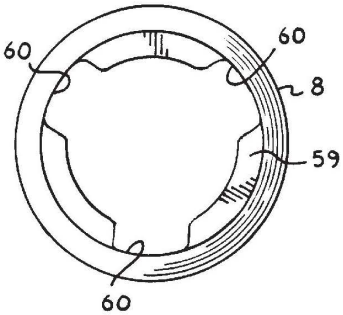

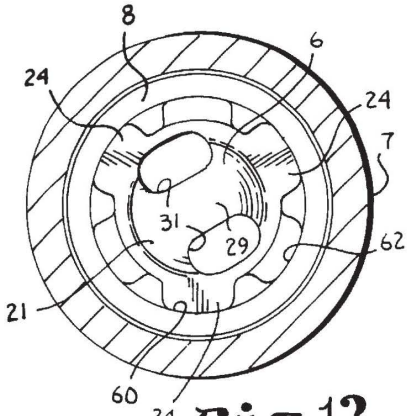

Fig. 12.

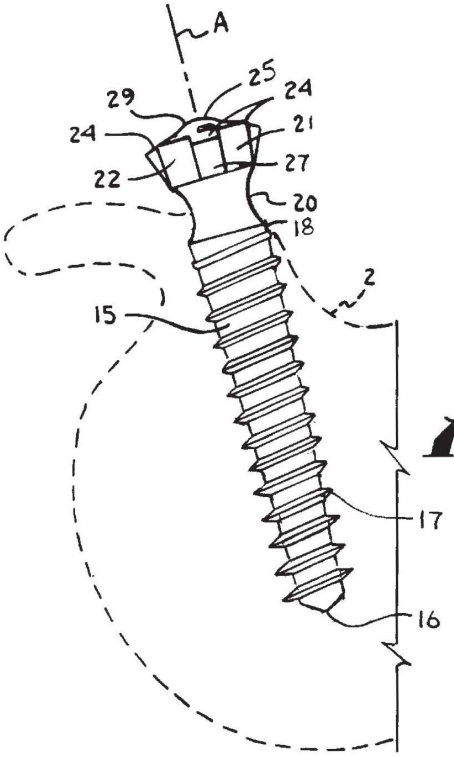

Fig. 8.

Fig. 13.

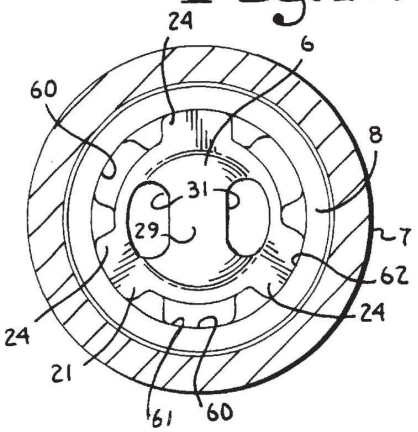

Fig. 9.

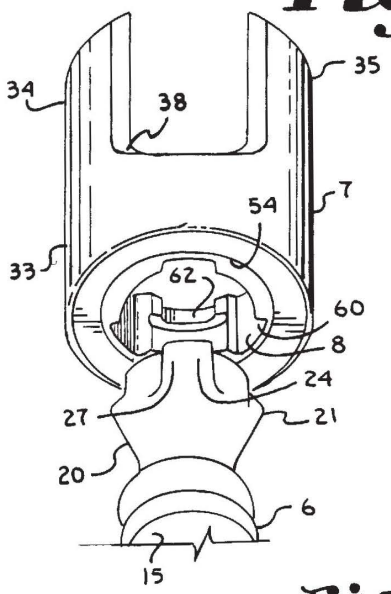

Fig. 10.

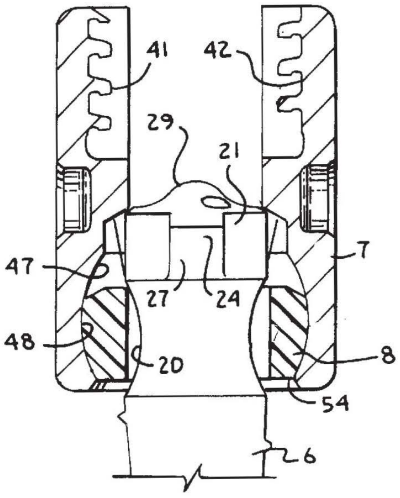

Fig. 11.

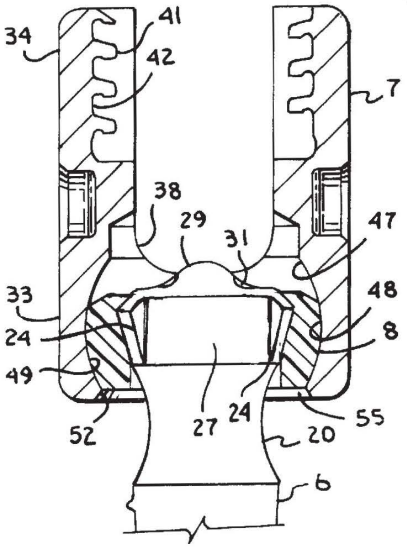

Fig. 14.

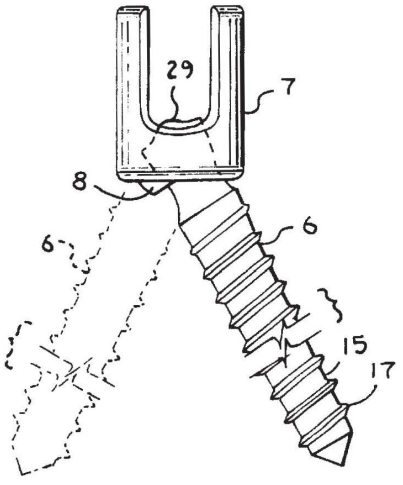

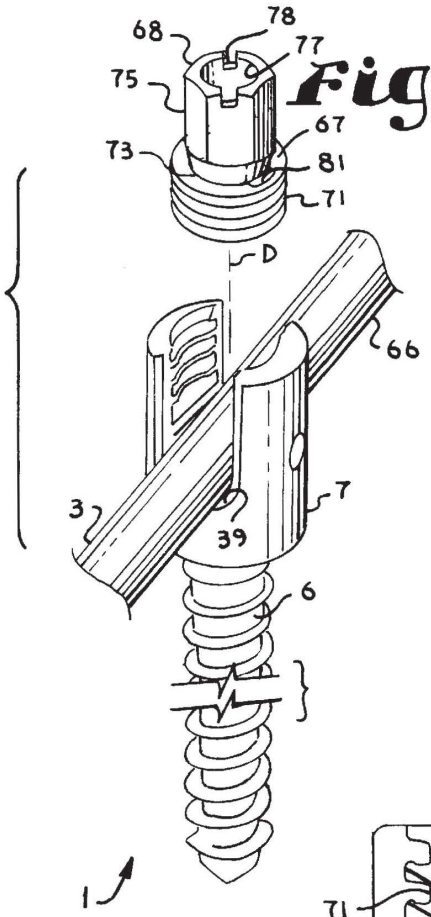

Fig. 15.

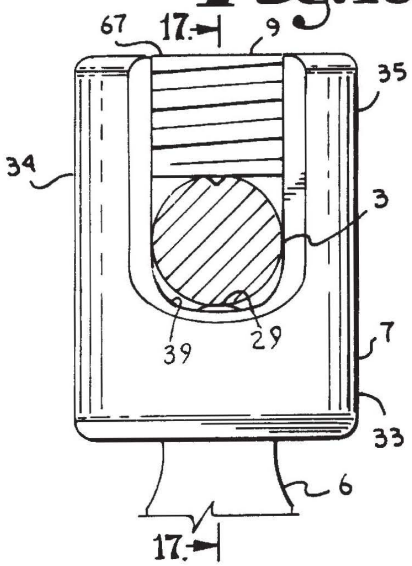

Fig. 16.

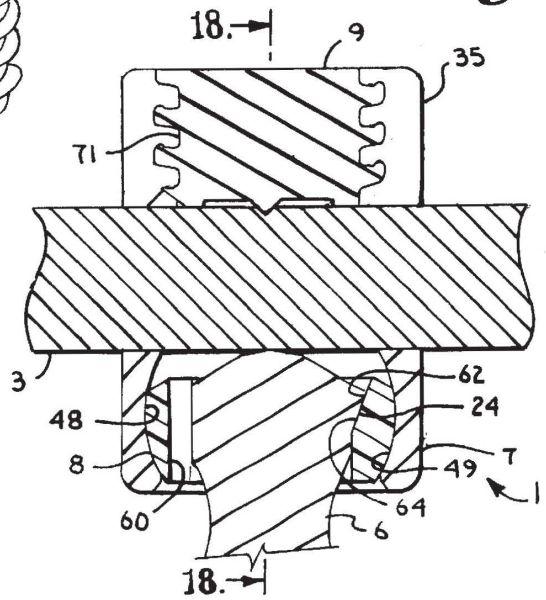

Fig. 17.

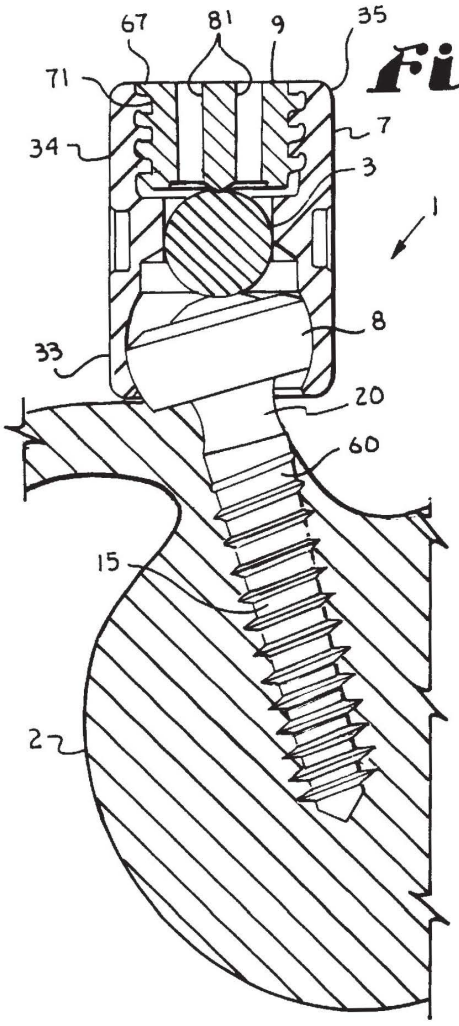

Fig. 18.

Fig. 19.

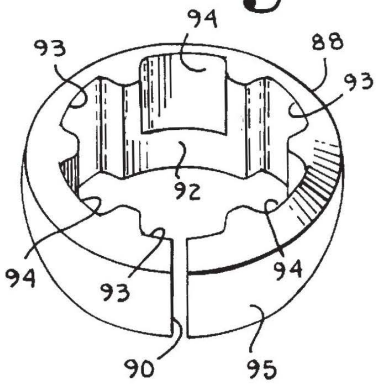

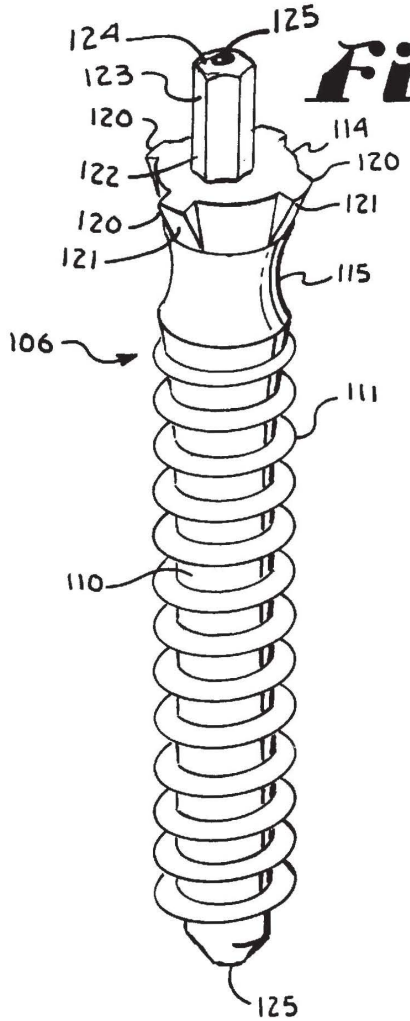
124
125
123
120
114
122
120
120
121
121
115
106
111
110
125

Fig.20.

Fig.21.

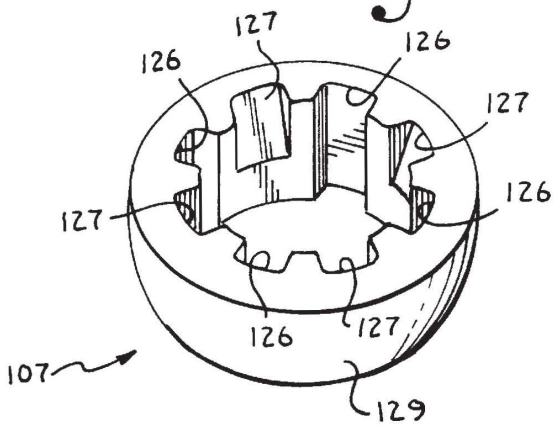
127
126
126
127
127
126
126
127
107
129

POLYAXIAL BONE SCREW WITH SPLINE CAPTURE CONNECTION

BACKGROUND OF THE INVENTION

The present invention is directed to a polyaxial bone screw for use in spinal surgery and the like and especially to such a screw adapted to receive a rod member and secure the rod member to a vertebra or the like.

Many spinal surgery procedures require securing various implants to bone and especially to vertebrae along the spine. For example, elongate rods are often required that extend along the spine to provide support to vertebrae that have been damaged or weakened due to injury, disease or the like. Such rods must be supported by certain vertebra and support other vertebra. The most common mechanism for providing such structure is to implant bone screws into certain bones which then in turn support the rod or are supported by the rod. Bone screws of this type may have a fixed head relative to a shank thereof. In the fixed bone screws, the head cannot be moved relative to the shank and the rod must be favorably positioned in order for it to be placed within the head. This is sometimes very difficult or impossible to do so polyaxial bone screws are commonly used. The polyaxial bone screws allow rotation of the head about the shank until a desired rotational position is achieved for the head relative to the shank after which the rod can be inserted and the position of the head eventually locked with respect to movement relative to the shank.

The present invention is directed to such swivel head type bone screws and, in particular, to swivel head bone screws having an open head that allows placement of the rod member within the head and then subsequent closure by use of a closure top, plug or the like to capture the rod in the head of the screw.

Because such implants are for placement within the human body, it is always desirable for the implant to have as little effect on the body as possible. Consequently, it is quite desirable for the implants to have a relatively small profile both in height and width. It is also desirable that the implants be lightweight.

Furthermore, it is desirable that the swivel head implants be unlikely to unintentionally disassemble within the body. It is very undesirable for pieces of the implant to be free to move around within the body after surgery is completed and it also assures that the implant retains an ability to correct the structural problem for which it was implanted. Furthermore, if the implant should slip or become loose for some reason, it is still desirable for all of the parts to remain together and not separate.

Consequently, it is desirable for there to be a lightweight, low profile polyaxial bone screw which assembles in such a manner that each subsequent piece locks proceeding pieces within the overall structure, so that there is less likelihood that the various pieces of the structure will undesirably disassemble.

SUMMARY OF THE INVENTION

The present invention is directed to a polyaxial bone screw that comprises a shank, a head and a retainer ring that operably cooperate with each other. The bone screw is designed to allow the shank to be locked or secured in a selected angular configuration with respect to the head, while the head receives a rod member and while the shank is implanted in a bone, such as a vertebra or vertebral body.

The shank has an implant body which includes an external helically wound thread that is in turn attached by a neck to a capture end with a capture or connector type structure. The capture structure is positioned outside the bone in use and has a radiused and cylindrically shaped radially outer surface that has at least one radially outwardly extending non helically wound projection or spline thereon. The capture structure also has an upper axially aligned and radiused dome that protrudes above the remainder of the shank and above the ring during use to manipulate the shank and to contact the rod. Further, in some embodiments the shank includes off axis apertures, grooves, side slots or the like for use by an installation tool with a mating configured head for driving and rotating the shank into the bone.

The head has a generally cylindrical shaped profile with an upwardly open U-shaped channel formed therein so as to effectively produce a lower base with two upstanding and spaced arms. The inner surfaces of the arms have a thread-form thereon or another suitable guide and advancement structure such as a helically wound flangeform for use in closing the upper part of the channel. Located in the interior of the base and coaxially aligned with the head is a chamber having an interiorly facing partial spherical shaped surface. The chamber further opens onto a bottom surface of the head through a head lower wall bore forming a constricted or restrictive neck sized and shaped to allow passage of the capture structure therethrough.

The retainer ring includes an external partial spherical or hemispherical surface that is sized and shaped to be seated in and slidably engage the partial spherical surface within the head, both having approximately the same radius of generation. The ring also has an internal, centrally located and axially extending ring bore sized and shaped to receive the capture structure of the shank therethrough. Further, the ring has a series of axially extending channels positioned about and opening into the central bore that are sized and shaped to allow sliding passage of the shank splines entirely through the ring so that the shank can be inserted through the ring while the ring is positioned within the chamber in the head. The channels are not helically wound about the bore and preferably extend vertically or parallel to the axis of the ring. The ring further includes a set of recesses that are circumferentially spaced from the channels and that open onto the upper part of the ring and into the bore, but do not pass entirely through the ring and that can be entered by the splines by drawing the shank with the splines thereon axially downwardly with respect to the ring. In this manner, the splines can be passed upwardly or uploaded through the ring by sliding through the channels in conjunction with the remainder of the shank capture and after sliding completely through the bore, the shank is then rotated a certain number of degrees relative to the head, and then drawn back downwardly or downloaded so that the splines encounter and engage the recesses wherein the splines are captured by the ring. The splines preferably have a wedge-shaped surface thereon which pushes not only downwardly, but radially outward against the retainer or capture ring when force is applied to the top of the shank.

During assembly, the ring is placed through the U-shaped channel into the chamber having the partial spherical surface and then rotated so that the ring hemispherical surface mates with and slidably engages the head partial spherical surface. Subsequently, the shank capture structure is uploaded into and extended through the ring central bore, while the splines pass through the channels. The shank is then rotated relative to the ring and then the shank is moved in an axially reverse direction opposed to uploading while the splines are posi-

tioned over the recesses so as to be aligned with the recesses and not aligned with the channels and so that the splines then enter the recesses. The ring with connected shank effectively thereafter form a ball and socket joint with the head and allow free rotation to a selected angular configuration until later locked in the selected configuration. The shank, head and ring are then placed in a bone by screwing the shank body into the bone using the apertures on the top of the shank or alternative structure such as grooves or faceted surfaces on the outside of the portion of the shank extending above the ring.

Thereafter, a rod is placed in the U-shaped channel and captured therein by closing the channel by use of a closure top or plug having a threadform or other external guide and advancement structure that mates with and advances along mating guide and advancement structure of the arms of the head, when the closure top is rotated. Preferably, the closure top also includes a break-off head that provides purchase for a tool for rotation and torquing of the closure top to a preselected torque and that such torque is transferred and applied as pressure against the rod received in the head. Once the preselected torque is achieved, the break-off head breaks away from the closure top. Under pressure from the closure top, the rod pushes against the dome of the shank that extends above the ring and thereby urges the splines downwardly. Because of the wedge shaped structure of the splines, the splines push both downwardly and outwardly upon the retainer or capture ring, when force is applied to the dome, so as to frictionally engage and positively seat the retaining ring in the cavity and prevent further rotation in conjunction with the shank dome frictionally engaging the rod under pressure. In particular, the hemispherical surface of the ring abuttingly and frictionally mates with the integral hemispherical interior facing surface of the head, while the dome frictionally mates with the rod under pressure from the rod so as to lock the shank and ring in a selected angular configuration relative to the head. The shank, in this manner, can be locked in a configuration selected from an infinite number of angular configurations with respect to the head. Once fully assembled in this manner, unless a part breaks into pieces, the shank cannot disengage from the capture ring and the head without disassembly of the device by reversing the process or breaking the parts.

OBJECTS AND ADVANTAGES OF THE INVENTION

Therefore, the objects in the present invention are: to provide a polyaxial bone screw having a bone implantable shank that can be locked in a fixed position relative to a head of the bone screw; to provide such a bone screw having a capture or retaining ring having a partial external hemispherical surface that seats within a partial internal spherical shaped chamber surface within and integrally formed with a head of the bone screw to form a ball and socket joint and wherein the shank is securable to the retaining ring; to provide such a bone screw wherein the shank has at least one spline that extends radially outward from a capture end thereof and wherein the retaining ring has a central bore that receives the capture end while a channel opening into the bore allows the spline to slide through the ring so as to pass above the ring, at which time the shank can be rotated a select number of degrees and further wherein the retaining ring has a capture recess that receives the spline on further downward or reverse movement along the axis of the shank relative to the retainer ring; to provide such a bone screw wherein the shank has an upwardly protruding radiused dome which has a radius that in one embodiment is substantially less than the radius of the external hemispherical surface on the retainer ring and that extends upwardly within the head chamber so as to reduce height of the screw head and further, is operably positioned so as to engage a rod member received in the head so as to receive downward pressure from the rod during assembly; to provide such a bone screw wherein a closure top is used to close a channel in the bone screw head after receiving the rod and to apply pressure to the rod member that in turn, exerts pressure on the dome of the shank so as to urge each spline into an abutting and tight relationship with the retaining ring and to urge the retaining ring both downwardly and radially outwardly, so that the external hemispherical surface on the retaining ring more completely contacts and frictionally engages the internal spherical surface within the chamber of the head thereby providing improved mechanical fixation to prevent further rotation of the shank relative to the head; to provide such a bone screw which has a comparatively low profile and which is comparatively light in weight; to provide such a bone screw that resists disassembly thereof except by removal of the closure top; to provide such a bone screw wherein the closure top can be removed by the surgeon should disassembly be desired at which time the entire structure can be easily and quickly disassembled and removed from the bone, if necessary; to provide such a bone screw wherein the shank is locked in position relative to the head during usage in a locked or fixed configuration; to provide such a bone screw wherein the shank cannot disassemble from the head and the retaining ring once the screw is fully assembled except if the closure top is removed and the device is disassembled by the surgeon; to provide such a bone screw which is easy to use and extremely effective for the intended usage thereof.

Other objects and advantages of this invention will become apparent from the following description taken in conjunction with the accompanying drawings wherein are set forth, by way of illustration and example, certain embodiments of this invention.

The drawings constitute a part of this specification and include exemplary embodiments of the present invention and illustrate various objects and features thereof.

BRIEF DESCRIPTION OF THE DRAWINGS

FIG. **1** is an exploded perspective view of three elements of a polyaxial bone screw in accordance with the present invention, including a shank, a head, and a retaining ring.

FIG. **2** is an enlarged top plan view of the retaining ring.

FIG. **3** is an enlarged perspective view of the retaining ring.

FIG. **4** is an enlarged side elevational view of the retaining ring.

FIG. **5** is an enlarged bottom plan view of the retaining ring.

FIG. **6** is an enlarged cross-sectional view of the head, taken along line **6**—**6** of FIG. **1**, illustrating the retaining ring being inserted into the head.

FIG. **7** is an enlarged cross-sectional view of the head similar to FIG. **6**, showing the retaining ring seated in the head.

FIG. **8** is a cross-sectional view of a vertebra illustrating the shank implanted therein.

FIG. **9** is an enlarged and fragmentary perspective view of the shank, head and retainer ring during assembly and just prior to the retainer ring being placed over the shank.

FIG. **10** is an enlarged, fragmentary and perspective cross-sectional view of the head similar to FIG. **6**, illustrat-

ing splines on a capture end of the shank that have been inserted through channels in the retainer ring and are positioned upwardly in the head above the retainer ring.

FIG. **11** is a cross-sectional view of the head, similar to FIG. **10**, showing the upper capture end of the shank with the splines lowered into receiving recesses in the ring and positioned therein.

FIG. **12** is a cross sectional view of the head and a top plan view of the shank and ring corresponding to the positioning shown in FIG. **10**.

FIG. **13** is a cross sectional view of the head and a top plan view of the shank and ring corresponding to the positioning shown in FIG. **11**.

FIG. **14** is a side elevational view of the head, ring and shank, illustrating the shank swinging or rotating from one position shown in solid lines to a second position shown in phantom lines.

FIG. **15** is a fragmentary and partially exploded view of a complete polyaxial bone screw assembly, prior to final assembly and illustrating a rod received in the head and a closure top with a break-off head, prior to the closure top being rotatably inserted into the head.

FIG. **16** is a fragmentary and enlarged front elevational view of the bone screw assembly fully assembled and illustrating the head with the rod received therein and with the closure top fully inserted and biasing against the rod that in turn biases against the top of the shank.

FIG. **17** is an enlarged and fragmentary cross-sectional view of the bone screw assembly with rod inserted therein, taken along line **17**—**17** of FIG. **16**.

FIG. **18** is an enlarged cross-sectional view of the vertebra, head, rod and closure top, taken along line **18**—**18** of FIG. **17** showing the shank implanted in the vertebra and with the bone screw assembly in a completely assembled and operational configuration with the shank locked in an angled orientation with respect to the head.

FIG. **19** is a perspective view of a modified retainer ring of a first modified embodiment in accordance with the present invention.

FIG. **20** is a perspective view of a second modified embodiment of the present invention illustrating a cannulated shank having four splines and a hex tool engageable head for manipulating the shank.

FIG. **21** is a perspective view of a ring for use in accordance with the second modified embodiment of the invention and the shank of FIG. **20**.

DETAILED DESCRIPTION OF THE INVENTION

As required, detailed embodiments of the present invention are disclosed herein; however, it is to be understood that the disclosed embodiments are merely exemplary of the invention, which may be embodied in various forms. Therefore, specific structural and functional details disclosed herein are not to be interpreted as limiting, but merely as a basis for the claims and as a representative basis for teaching one skilled in the art to variously employ the present invention in virtually any appropriately detailed structure.

The reference number **1** generally represents a polyaxial bone screw apparatus or assembly in accordance with the present invention operably utilized by implantation into a vertebra **2** and in conjunction with a longitudinal member or rod **3** so as to operably secure the rod **3** in a fixed position relative with respect to the vertebra **2**.

The fully assembled bone screw assembly **1** comprises a shank **6**, a head **7**, a retainer ring **8** and a closure top **9**. The shank **6** is perhaps best seen in FIGS. **1** and **8**. The shank **6** is elongate and has a lower body **15** ending in a tip **16**. The shank body **15** has a helically wound bone implantable thread **17** extending from near the tip **16** to near the top **18** of the body **15** and extending radially outward therefrom. During use, the body **15** utilizing the thread **17** is implanted into the vertebra **2**, as is seen in FIG. **18**. The shank **6** has an elongated axis of rotation generally identified by the reference letter A. It is noted that the reference to the words top and bottom as used herein refers to the alignment shown in the various drawings, as well as the normal connotations applied to such devices, and is not intended to restrict positioning of the assembly **1** in actual use.

Axially extending outward and upward from the shank body **15** is a neck **20** of reduced radius as compared to the adjacent top **18** of the body **15**. Further extending axially and outwardly from the neck **20** is a capture end or structure **21** operably providing a connective or capture structure free from the bone or vertebra **2** for joining with the head **7**. The capture structure **21** has a radially outer cylindrical surface **22**. The cylindrical surface **22** has at least one non-helically wound and radially outward extending projection or spline **24** that extends beyond the surface **22**. In the embodiment shown in FIGS. **1** through **18**, the capture structure **21** has three such splines **24**. The splines **24** are located near an upper end **25** of the shank **6** and are equally circumferentially centered and spaced thereabout so as to be centered at approximately 120 degree intervals relative to each other. Each of the splines **24** has a triangular shaped profile and a front wedge forming face **27** that slopes downwardly and radially inwardly from near the upper end **25** of the shank **6**. Also located on the shank upper end **25** is a centrally located, axially extending and upwardly directed projection or dome **29** that is centrally radiused so as to have a first radius.

The shank upper end **25** still further includes at least one tool engagement aperture for engagement by a tool driving head (not shown) that is sized and shaped to fit into the apertures for both driving and rotating the shank **6** into the vertebra **2**. In the illustrated embodiment, a pair of apertures **31** located in spaced relationship to each other, the dome **29** and the shank axis of rotation A are located on the shank upper end **25**. The apertures **31** extend into the shank capture structure **21** parallel to the axis A. It is foreseen that various numbers of apertures, slots or the like may be utilized in accordance with the invention for engaging the driving tool of suitable and similar mating shape, or that the outer surface of the upper axial projection can be grooved or formed with a faceted surface that can be driven by a mating tool that goes over the surface.

The head **7** has a generally cylindrical shaped profile, as is seen in FIG. **1**, although the head **7** is not a solid cylinder. The head **7** has a base **33** with a pair of upstanding arms **34** and **35** forming a U-shaped channel **38** between the arms **34** and **35** with a lower seat **39** having substantially the same radius as the rod **3** for operably snugly receiving the rod **3**. Each of the arms **34** and **35** has an interior surface **41** that includes a partial helically wound guide and advancement structure **42**. In the illustrated embodiment, the guide and advancement structure **42** is a partial helically wound flangeform which will mate under rotation with a similar structure on the closure top **9**, as described below. However, it is foreseen that the guide and advancement structure **42** could alternatively be a V-shaped thread, a buttress thread, a reverse angle thread or other thread like or non-thread like helically wound advancement structures for operably guid-

ing under rotation and advancing the closure top between the arms **34** and **35**. Tool engaging apertures **44** are formed on the outsides of the arms **34** and **35** for holding the head **7** during assembly.

A chamber or cavity **47** is located within the head base **33** that opens upwardly into the U-shaped channel **38**. The cavity **47** includes a partial spherical shaped surface **48**, at least a portion of which forms a partial internal hemispherical seat **49** for the ring **8**, as is described further below. A bore **52** further communicates between the cavity **47** and the bottom exterior of the base **33** and is coaxial with a rotational axis B of the head **7**. The bore **52** at least partially defines a restrictive neck **54** that has a radius which is smaller than the radius of the ring **8**, as will be discussed further below, so as to form a restrictive constriction at the location of the neck **54** relative to the retainer ring **8** to prevent the ring **8** from passing between the cavity **47** and the lower exterior of the head **7**. A bevel **55** extends between the neck **54** and the bottom exterior of the base **33**. The hemispherical shaped surface **48** has a second radius associated therewith.

The retainer ring **8** which is best seen in FIGS. **2** through **5** has an operational central axis which is the same as the elongate axis A associated with the shank **6**, but when the ring **8** is separated from the shank **2**, the axis of rotation is identified as axis C, such as in FIG. **4**. The retainer ring **8** has a central bore **57** that passes entirely through the retainer ring **8** from a top surface **58** to a bottom surface **59** thereof. The bore **57** is sized and shaped to fit snugly but slidably over the shank capture structure cylindrical surface **22** in such a manner as to allow sliding axial movement therebetween under certain conditions, as described below. Three axially aligned channels **60** are spaced from the axis C and extend radially outward from the bore **57** and into the wall of the retainer ring **8** so as to form three top to bottom grooves or slots therein. Backs **61** of the channels **60** are the same radial distance from the axis C as the distance the outermost portion of the splines **24** extend from the axis A of the shank **6**. The channels **60** are also circumferentially angularly spaced equivalent to and have a width that corresponds with the splines **24**. In this manner, the shank capture structure **21** can be uploaded into the ring **8** by axially sliding the capture structure **21** through the ring central bore **57** whenever the splines **24** are aligned with the channels **60** or are in an aligned configuration, as seen in FIG. **12**.

The retainer ring **8** also has three capture partial slots, receivers or recesses **62** which extend radially outward from the upper part the bore **57** and that do not extend the entire length from top to bottom of the retainer ring **8**, but rather only open on the top surface **59** and extend partly along the height of the ring **8** thereof. The recesses **62** are sized and positioned and shaped to receive the splines **24** from above when the splines **24** are in a non-aligned configuration relative to the channels **60**. That is, each of the recesses **62** has a width that approximates the width of the splines **24** and has a mating wedge engaging surface **64** that is shaped similar to the spline wedge forming faces **27**, so that the splines **24** can be slidably received into the recesses **62** from above by axially translating or moving the shank **6** downward relative to the ring **8** when the splines **24** are positioned above the recesses **62** in a recess aligned configuration.

In some embodiments, the wedge engaging faces **64** slope slightly greater than the wedge forming faces **27** on the splines **24** so that there is additional outward wedging that takes place when the splines **24** are urged downwardly into the recesses **62**, as further discussed below.

In this manner the shank capture structure **21** can be uploaded or pushed upwardly through the retainer ring central bore **57** so as to clear the top **58** of the retainer ring **8**, rotated approximately 60 degrees and then downloaded or brought downwardly so that the splines **24** become located and captured in the recesses **62**. Once the splines **24** are seated in the recesses **62** the shank **6** cannot move further axially downward relative to the ring **8**. Preferably, the retainer ring **8** is constructed of a metal or other material having sufficient resilience and elasticity as to allow the ring **8** to radially expand slightly outward by downward pressure of the splines **24** on the recesses **62** under pressure from structure above, as will be discussed further below. This produces a slight outward radial expansion in the ring **8** at the location of the recesses **62**.

The ring **8** has a radially outer partial hemispherical shaped surface **65** sized and shaped to mate with the partial spherical shaped surface **48** and having a third radius approximately equal to the second radius associated with the surface **48**. The ring third radius is substantially larger than the first radius associated with the dome **29** and also substantially larger than the radius of the neck **54**.

The longitudinal member or elongate rod **3** can be any of many different types of implants utilized in reconstructive spinal surgery and the like, but is normally a cylindrical elongate structure having a cylindrical surface **66** of uniform diameter. The rod **3** is preferably sized and shaped to snugly seat near the bottom of the U-shaped channel **38** and, during normal operation, will be positioned slightly above the bottom of the channel **38**. In particular, the rod **3** normally engages the shank dome **29**, as is seen in FIG. **16** and urges the dome **29** and, consequently, the shank **6** downwardly when the entire assembly **1** is fully assembled.

The closure top **9** can be any of the variety of different types of closure tops for use in conjunction with the present invention with suitable mating structure on the upstanding arms **34** and **35**. The illustrated closure top **9** has a generally cylindrical shaped base **67** with an upwardly extending break-off head **68**. The base **67** includes a helically wound guide and advancement structure **71** that is sized, shaped and positioned so as to engage the guide and advancement structure **42** on the arms **34** and **35** to allow the closure top **9** to be rotated into the head **7** and, in particular, to close the top of the U-shaped channel **38** to capture the rod **3**, see FIG. **16**, preferably without splaying of the arms **34** and **35**. The closure top **9** also operably biases against the rod **3** by advancement and applying pressure to the rod **7** under torquing, so that the rod **3** is urged downwardly against the shank dome **29**. Downward biasing of the shank dome **29** operably produces a frictional engagement between the rod **3** and dome **29** and also urges the splines **24** downwardly to both bias downwardly and radially outwardly against the retainer ring **8**, so as to snugly and frictionally seat the retainer ring external hemispherical surface **65** into and quite tightly against the partial internal spherical surface **48** of the head **7** and further so as to lock the shank **6** and retainer ring **8** in a fixed position relative to the head **7**.

The closure top break-off head **68** is secured to the base **67** at a neck **73** that is sized and shaped so as to break away at a preselected torque that is designed to properly seat the retainer ring **8** in the head **7**. The break-off head **68** includes an external faceted surface **75** that is sized and shaped to receive a conventional socket head of a driving tool (not shown) to rotate and torque the closure top **9**. The break-off head **68** also includes a central bore **77** and grooves **78** for operably receiving the manipulating tools.

The closure top **9** also includes removal structure comprising a pair of off axis pass through apertures **81** that

extend from top to bottom of the base **67**. The apertures **81** are located parallel to an axis of rotation axis D of the closure top **9**, but are radially spaced away therefrom. The apertures **81** become accessible from the top of the base **67** after the break-off head **68** breaks away from the base **67**, as is seen in FIG. **18**. The apertures **81** are designed to receive a tool having a face that mates with and is insertable into the apertures **81** for rotating the closure top base **67** subsequent to installation so as to provide for removal, if necessary.

While the embodiment illustrated in FIGS. **1** through **18** includes three splines **3**, it is foreseen that a shank **6** with a single spline would be operable within the scope of the invention. However, in some embodiments additional splines **3** may provide a more even distribution of force upon the ring **8** and reduce the likelihood of failure because of hoop strain or the like. Paired and opposed splines in certain embodiments may provide a more even distribution of forces. While any number of splines are foreseen as possible for use under the present invention, the requirement that the splines must get smaller as their number gets larger, limits the maximum number at some point. However, the concept appears viable until that point is reached. It is also noted that additional channels and recesses allow the ring to be more elastic in certain embodiments.

When the polyaxial bone screw assembly **1** is placed in use in accordance with the invention the retainer ring **8** is normally first slid through the head U-shaped channel **38**, as is shown in FIG. **6**, and into and seated in the chamber **47**, as is seen in FIG. **6**. Thereafter, the retainer ring **8** is rotated 90 degrees so as to be coaxial with the head **7** and so that the retainer ring outer surface **65** snugly but slidably mates with the head interior spherical shaped surface **48**, as is seen in FIG. **7**.

With reference to FIGS. **9**, **10**, and **12** the ring **8** in the head **7** is slid over the shank capture structure **21** so that the splines **24** slide upwardly through and above respective channels **60** so that the splines **24** are then located, at least partially, in the U-shaped channel **38** and chamber **47** above the retainer ring **8**, as is shown in FIG. **10**. The shank **6** is then rotated 60 degrees relative to the head about the axis A and the translational direction of the shank **6** is reversed so that it goes downwardly or axially with respect to the head **7**, as is seen in FIGS. **11** and **13** and the splines **24** enter the recesses **62**. At this point there is no substantial outward or downward pressure on the retainer ring **8** and so the retainer ring **8** is easily rotatable along with the shank **6** within the chamber **47** and such rotation is of a ball and socket type limited by engagement of the shank neck **20** with the ring restrictive neck **54**. Rotation is shown in FIG. **14** where it is illustrated that the shank **6** can be rotated through a substantial angular rotation relative to head **7**, both from side to side and from front to rear so as to substantially provide a universal or ball joint wherein the angle of rotation is only restricted by engagement of the neck **20** with the neck **54** on the head **7**.

The assembly **1** is then normally screwed into a bone, such as vertebra **2**, by rotation of the shank **6** using a suitable driving tool (not shown) that operably drives and rotates the shank **6** by engagement thereof at the apertures **31**. The relative position of the shank **6** is shown in FIG. **8** with a phantom vertebra **2**. Normally, the head **7** and ring **8** are assembled on the shank **6** before placing the shank **6** in the vertebra **2**, but in certain circumstances, the shank **6** can be first implanted with the capture structure **21** extending proud to allow assembly and then the shank **6** can be further driven into the vertebra **2**.

A rod **3** is eventually positioned within the head U-shaped channel **38**, as is seen in FIG. **15**, and the closure top **9** is then inserted into and advanced between the arms **34** and **35** so as to bias or push against the rod **3**. The break-off head **68** of the closure top **9** is torqued to a preselected torque, for example 90 inch pounds, to urge the rod **3** downwardly. The shank dome **29**, because it is radiused and sized to extend upwardly into the U-shaped channel **38**, is engaged by the rod **3** and pushed downwardly when the closure top **9** pushes downwardly on the rod **3**, as is seen in FIG. **16**.

The downward pressure on the shank **6** in turn urges the splines **24** downwardly which exerts both a downward and outward thrust on the retainer ring **8**, as is seen in the configuration shown in FIG. **17**. The polyaxial bone screw assembly **1** including rod **3** and shown positioned in a vertebra **2** is illustrated in FIG. **18**. The axis A of the bone screw shank **6** is illustrated as not being coaxial with the axis B of the head **7** and the shank **6** is locked in this angular locked configuration. Other angular configurations can be achieved, as required during installation surgery due to positioning of the rod **3** or the like.

If removal of the assembly **1** is necessary, the assembly **1** can be disassembled by using a driving tool mating with the closure top apertures **81** to rotate the base **67** and reverse the advancement thereof in the head **7** and then disassembly of the remainder of the assembly **1** in reverse mode in comparison to the procedure described above for assembly.

Illustrated in FIG. **19** is a second embodiment of a retainer ring **88** in accordance with the present invention. The retainer ring **88** is quite similar to the retainer ring **8** of the previous embodiment except that it is noncontinuous and has a radially extending space or gap **90** from top to bottom along one side thereof. The gap **90** allows for expansion without requiring stretching of the material of construction of the ring **88**, as is the case with the previous embodiment. The ring **88** includes a central bore **92**, spline channels **93** and spline receivers **94** which are all similar to the similar structures described for the previous embodiment. The retainer ring **88** also has a partial hemispherical shaped surface **95** on the outer side thereof.

Illustrated in FIGS. **20** and **21** are elements of a third embodiment of the present invention including a shank **106** and a capture ring **107** which are used otherwise in the same manner as has been described in the first embodiment and, in particular, with a head such as head **7** which is not further described herein. The shank **106** is similar to the shank **6** in that it has a body **110** with a helically round thread **111** thereon and a capture structure **114** joined to the body **110** by a neck **115**. The principle differences between the present embodiment and the first embodiment is that the capture structure **114** includes four splines **120** that are similar in shape to the splines **24** of the first embodiment, but the splines **120** are centered and located at 90 degrees from one another such that there is a pairing of opposed splines **120** and the dome of the prior embodiment is replaced with an axial extension **122**. Each of the splines **120** includes a wedge face **121**. The extension **122** has a faceted surface **123** that extends parallel to the axis of the shank **106** and that is sized and shaped to receive a hex head driving tool (not shown) for driving the shank **106** into bone. The extension **123** also has a radiused upper surface **124**. The shank **106** also has an axial extending cannulation or bore **125** that extends entirely through the length of the shank **106**.

The capture ring **107**, shown in FIG. **21**, is otherwise similar to the retainer ring **8** except that it includes a set of four channels **126** and four recesses **127** that are sized shaped and positioned so as with respect to the channels **126** to allow the splines **120** to slidingly pass upwardly through

and with respect to the recesses **127** to capture and receive the splines **120**, as they move axially downwardly. The ring **107** has a partial hemispherical outer surface **129** that mates with the corresponding surface in the head **7** in the manner described for the first embodiment.

It is to be understood that while certain forms of the present invention have been illustrated and described herein, it is not to be limited to the specific forms or arrangement of parts described and shown.

What is claimed is:

1. A polyaxial bone screw comprising:

(a) a shank having a body adapted to be implanted in a bone and a capture structure extending from said body; said capture structure including at least one spline that extends radially outward therefrom;

(b) a head having a channel adapted to receive a rod member and a base having a cavity with a partial spherical surface and communicating with said channel through an upper opening; said cavity communicating with an exterior of said head through a lower opening sized and shaped to receive said shank capture structure therethrough;

(c) a retainer ring that is receivable into said head cavity and having an external partial spherical surface sized and shaped to be seated on said head partial spherical surface; said ring having a central bore with an axial pass through ring channel opening into said bore for each spline respectively; said ring bore and ring channels being sized and shaped to allow said shank capture structure to axially pass therethrough and then be rotated; said retainer ring also having a capture recess for each spline sized and shaped to receive and capture a respective spline when said shank is subsequently moved axially downward relative to said retainer ring such that said capture structure is captured by said ring, but said shank can be rotated relative to said head in an unlocked assembly configuration; and

(d) a closure top for operably urging said shank downward so as to frictionally engage said ring surface with said head surface so as to lock said shank in position relative to said head in a locked configuration.

2. The screw according to claim **1** wherein:

(a) said shank has at least two splines circumferentially equally spaced.

3. The screw according to claim **1** wherein:

(a) said shank has at least four splines circumferentially equally spaced.

4. The screw according to claim **1** wherein:

(a) said shank capture structure includes an upward extension having a radiused dome sized and shaped so as to be adapted to engage a rod member when received in said head and wherein said closure top is adapted to operably urge the rod member against said dome upon said closure top being operably positioned in said head.

5. The screw according to claim **4** wherein:

(a) said dome has a radius that is substantially less than the radius of said retainer ring hemispherical surface.

6. The screw according to claim **1** wherein:

(a) said head includes upstanding spaced arms forming a channel adapted to receive the rod member and having guide and advancement structures on the inside of said arms; and

(b) said top operably is positioned between said arms to close said channel and includes guide and advancement structure mating with the guide and advancement structures on said arms to allow said closure top to be rotated into said head and to be adapted to bias against the rod member located therein.

7. The screw according to claim **6** in combination with:

(a) a rod received in said U-shaped channel.

8. The screw according to claim **1** wherein:

(a) said head lower opening has a restrictive neck that is smaller in radius than said retainer ring.

9. The screw according to claim **1** wherein:

(a) said ring loads into said head through said upper opening and said shank loads into said head through said lower opening.

10. The screw according to claim **1** wherein:

(a) said ring is a split ring having a radially extending gap therealong.

11. In a polyaxial bone screw having a head and a shank, the improvement comprising:

(a) further including a capture ring sized and shaped to be received within said head and having a central bore with at least one axially aligned channel extending radially outward from said bore; and

(b) said shank having a capture end having a radially outward extending spline associated with each channel; said shank capture end being sized and shaped to pass through said bore with each of said splines, such that each of said splines is thereafter positioned above said ring; said shank being thereafter axially rotatable so that each of said splines is non aligned with a respective channel thereby capturing said shank relative to said ring.

12. The bone screw according to claim **11** including at least two channels and at least two splines sized and shaped and positioned to slidingly mate with respective channels when in an aligned configuration.

13. The bone screw according to claim **11** wherein:

(a) said shank includes an upper projection that extends above said ring after said shank and ring are joined; and including

(b) a closure mechanism for said head; said closure mechanism biasing against said projection when said bone screw is assembled so as to urge each of said splines against said ring.

14. The screw according to claim **13** wherein:

(a) said projection is a dome having a first radius of curvature that is smaller than a second radius of curvature associated with said ring.

15. The screw according to claim **11** wherein;

(a) said head has an inner chamber that has a partial spherical surface substantially having the same radius as a partial hemispherical surface on said ring; said ring operably seating in said head chamber and on said head surface.

16. The screw according to claim **15** wherein:

(a) said chamber opens onto an exterior of said head through a neck sized and shaped to receive said shank; said shank being operably at least partially received through said neck; and

(b) said neck is smaller in diameter than said ring.

17. The screw according to claim **16** wherein:

(a) said head has a rod receiving channel; and including

(b) a rod operably positioned in said rod channel and operably engaging said shank;

(c) a closure top for operably closing said rod channel and biasing against said rod.

18. The screw according to claim **11** wherein:

(a) said ring includes a spline receiving recess for each of said splines; each of said recesses being circumferentially spaced from a respective ring spline channel and operably capturing a respective spline therein when such a spline is aligned with a respective recess and inserted from above said ring.

19. In a polyaxial bone screw having a shank with a threaded body portion and a capture component joinable by a connection mechanism; the improvement wherein said capture mechanism comprises:

(a) a radially outward extending spline located on a capture end of said shank body portion;

(b) a passthrough bore located in said capture component and including a radially outward extending channel; and

(c) said bore being sized and shaped to slidingly receive and allow passage of said shank capture end with said spline through said bore and channel in an aligned configuration; said shank body portion being thereafter axially rotatable relative to said capture component to position said spline in a non aligned configuration wherein said spline will not pass through said channel.

20. The bone screw according to claim **19** wherein:

(a) said capture component includes a capture recess for said spline that is only accessible when said spline is not aligned with said channel in said non aligned configuration.

21. A polyaxial bone screw having:

(a) a head;

(b) a shank with a threaded body axially adjoining a capture end; said capture end having a circular cross section with at least one non helically wound and radially outward extending spline; and

(c) a capture member having a bore with a radially outward positioned channel; said bore and said channel being sized and shaped to slidingly receive said shank capture end and spline when in an aligned configuration; said shank being axially rotatable relative to said capture member after passage of said capture end and spline through said bore and channel to a non aligned configuration wherein said spline is not aligned with said channel and in a non aligned configuration thereby joining said shank to said capture member.

22. The bone screw according to claim **21** wherein:

(a) said capture member includes a capture recess for receiving and capturing said spline in said channel non aligned configuration.

23. The bone screw according to claim **21** wherein:

(a) said head includes a cavity with an integral partial spherical shaped surface; and

(b) said capture member includes an outer surface that is sized and shaped to be rotatingly received in said head surface.

24. The bone screw according to claim **23** including:

(a) a rod channel for receiving a rod member; and

(b) a locking closure top for operably locking said rod and said capture member in a fixed position relative to said head.

25. The bone screw according to claim **23** wherein:

(a) said cavity has a lower neck that operably receives said shank capture end and said neck has a radius associated therewith that is smaller than a radius of said capture member, so as to prevent passage of said capture member therethrough when said capture member is in said head cavity.

* * * * *