US007250052B2

(12) **United States Patent**
Landry et al.

(10) **Patent No.: US 7,250,052 B2**
(45) **Date of Patent: Jul. 31, 2007**

(54) **SPINAL STABILIZATION SYSTEMS AND METHODS**

(75) Inventors: **Michael E. Landry**, Austin, TX (US); **Larry T. Khoo**, Studio City, CA (US); **Erik J. Wagner**, Austin, TX (US); **Charles R. Forton**, Austin, TX (US); **Robert J. Jones**, Austin, TX (US)

(73) Assignee: **Abbott Spine Inc.**, Austin, TX (US)

(*) Notice: Subject to any disclaimer, the term of this patent is extended or adjusted under 35 U.S.C. 154(b) by 545 days.

(21) Appl. No.: **10/697,793**

(22) Filed: **Oct. 30, 2003**

(65) **Prior Publication Data**

US 2004/0138662 A1 Jul. 15, 2004

Related U.S. Application Data

(60) Provisional application No. 60/471,254, filed on May 16, 2003, provisional application No. 60/466,091, filed on Apr. 28, 2003, provisional application No. 60/422,455, filed on Oct. 30, 2002.

(51) **Int. Cl.**
A61B 17/56 (2006.01)

(52) **U.S. Cl.** **606/61**

(58) **Field of Classification Search** 606/61; 623/17.11

See application file for complete search history.

(56) **References Cited**

U.S. PATENT DOCUMENTS

3,875,595 A * 4/1975 Froning 623/17.12
5,015,247 A * 5/1991 Michelson 606/61
5,354,292 A * 10/1994 Braeuer et al. 606/1
5,647,873 A 7/1997 Ralph et al.
5,817,094 A 10/1998 Ralph et al.
6,139,549 A * 10/2000 Keller 606/61

(Continued)

FOREIGN PATENT DOCUMENTS

DE 29810798 U1 10/1999

(Continued)

OTHER PUBLICATIONS

Atavi Atraumatic Spine Fusion System, "Endoscopic Posterolateral Fusion," Endius Inc. (2001).

(Continued)

Primary Examiner—Eduardo C. Robert
Assistant Examiner—James L. Swiger
(74) *Attorney, Agent, or Firm*—Beth A. Vrioni; Michael L. Woods

(57) **ABSTRACT**

A spinal stabilization system may be formed in a patient. In some embodiments, a minimally invasive procedure may be used to form a spinal stabilization system in a patient. Bone fastener assemblies may be coupled to vertebrae. Each bone fastener assembly may include a bone fastener and a collar. The collar may be rotated and/or angulated relative to the bone fastener. Detachable members may be coupled to the collar to allow for formation of the spinal stabilization system through a small skin incision. The detachable members may allow for alignment of the collars to facilitate insertion of an elongated member in the collars. An elongated member may be positioned in the collars and a closure member may be used to secure the elongated member to the collars.

37 Claims, 50 Drawing Sheets

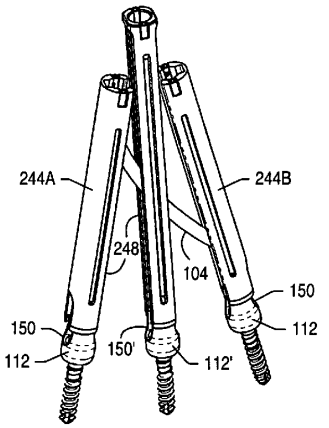

U.S. PATENT DOCUMENTS

6,183,472	B1 *	2/2001	Lutz	606/61
6,183,478	B1 *	2/2001	Konieczynski	606/104
6,200,322	B1 *	3/2001	Branch et al.	606/96
6,331,179	B1	12/2001	Freid et al.	
6,360,750	B1 *	3/2002	Gerber et al.	128/898
6,488,681	B2 *	12/2002	Martin et al.	606/61
6,520,907	B1	2/2003	Foley et al.	
6,530,926	B1 *	3/2003	Davison	606/61
6,530,929	B1 *	3/2003	Justis et al.	606/103
6,599,290	B2	7/2003	Bailey et al.	
7,056,321	B2 *	6/2006	Pagliuca et al.	606/61
2001/0001119	A1	5/2001	Lombardo	
2003/0208203	A1 *	11/2003	Lim et al.	606/61
2004/0143265	A1 *	7/2004	Landry et al.	606/61
2004/0249378	A1 *	12/2004	Saint Martin et al.	606/61

FOREIGN PATENT DOCUMENTS

EP	0190678	B1	3/2002
FR	27292391	A1	7/1996
FR	2796545	A	1/2001

OTHER PUBLICATIONS

Medtronic Sofamor DA, CD Horizon Rod Insertion System, as described by: Kevin T. Foley, M.D., Department of Neurosurgery University of Tennessee, Memphis, Tennessee, Medtronic Sofamor Danek (2002).

Versalok™ Low Back Fixaiton System, Setting a New Standar for Low Back Fixation, Wright Medical Technology, Inc. (1996).

* cited by examiner

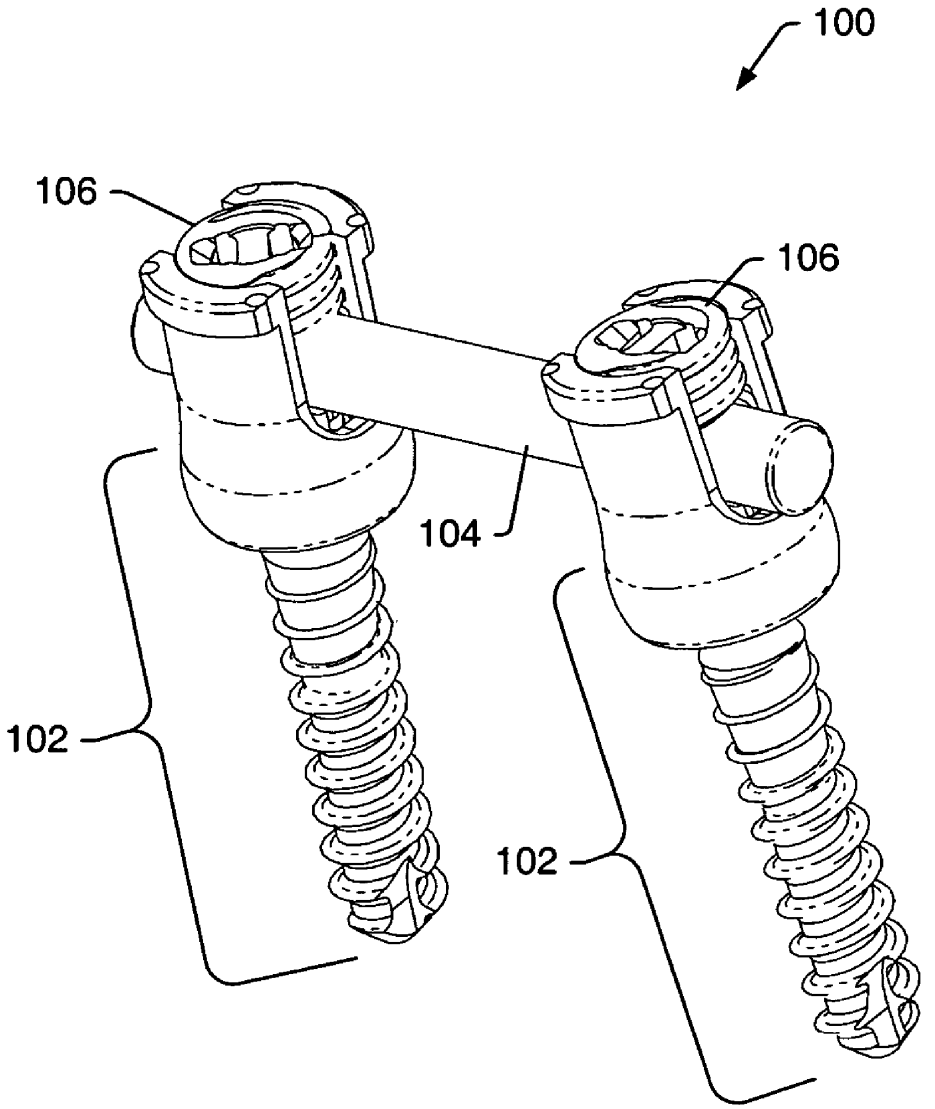

FIG. 1

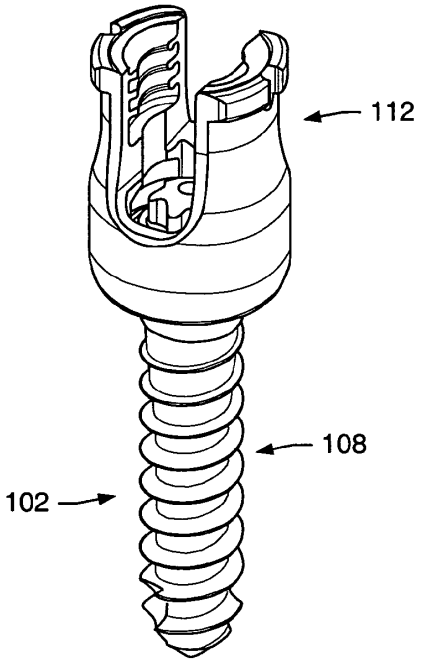

FIG. 2

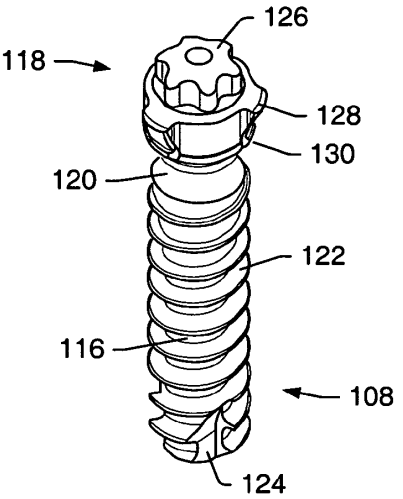

FIG. 3

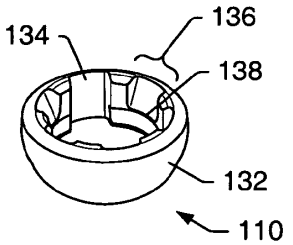

FIG. 4A

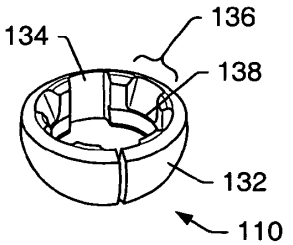

FIG. 4B

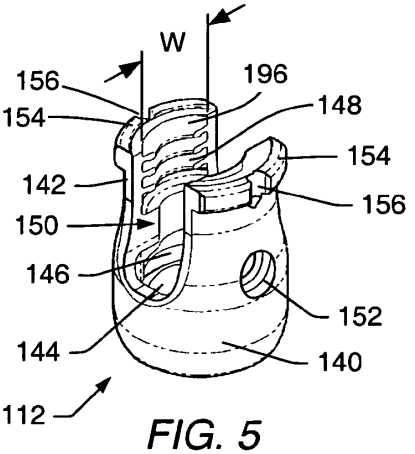

FIG. 5

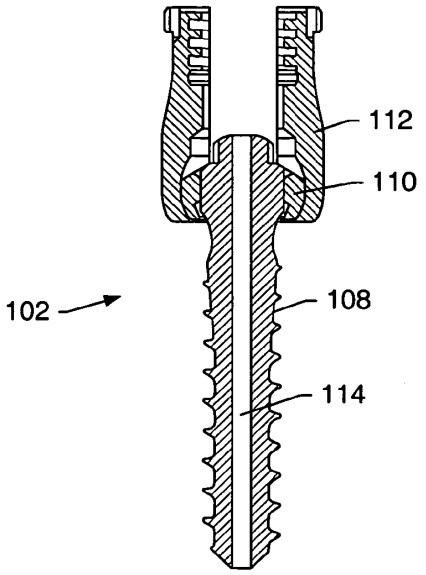

FIG. 6

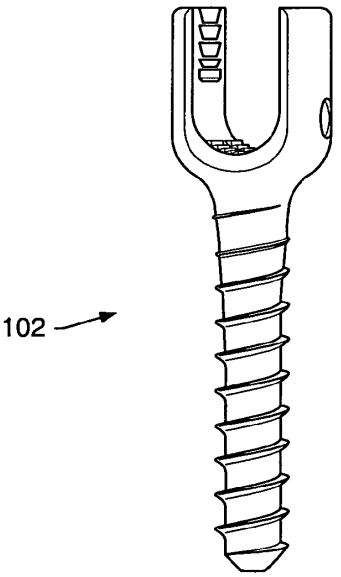

FIG. 7

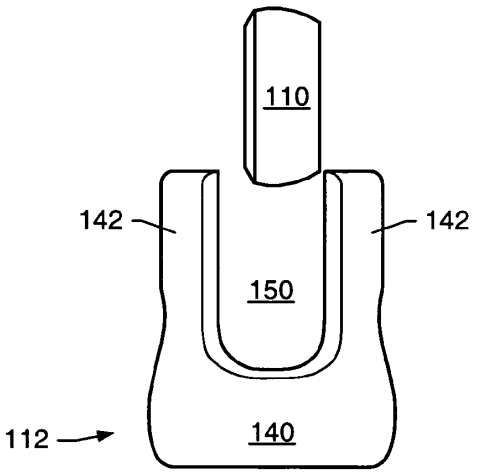

FIG. 8A

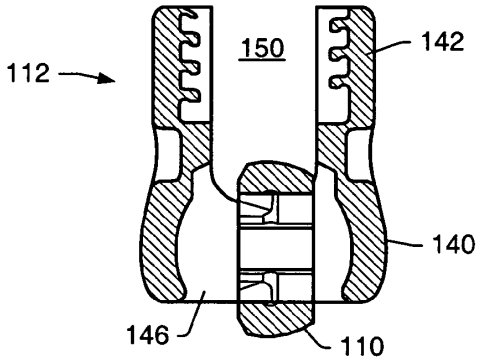

FIG. 8B

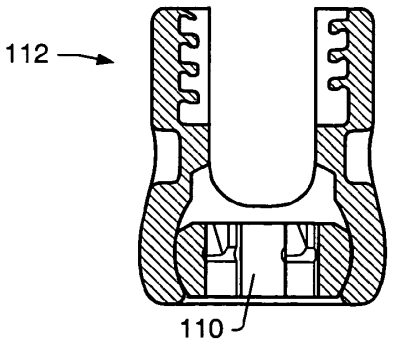

FIG. 8C

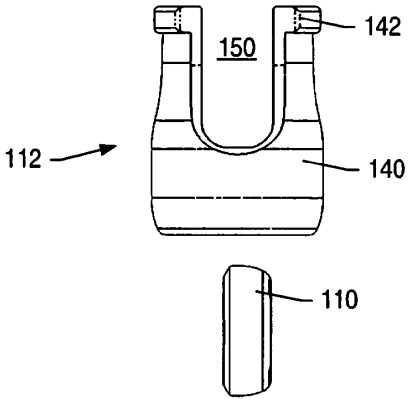

FIG. 9A

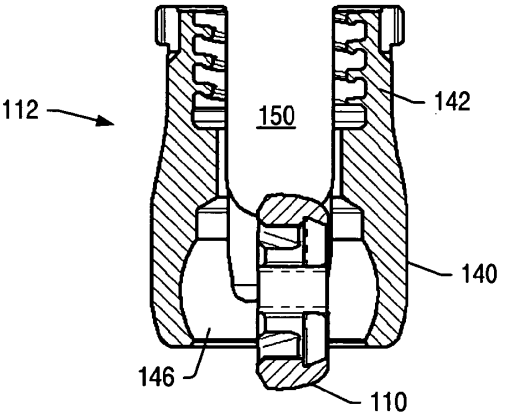

FIG. 9B

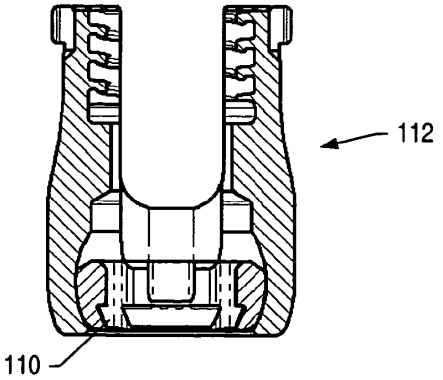

FIG. 9C

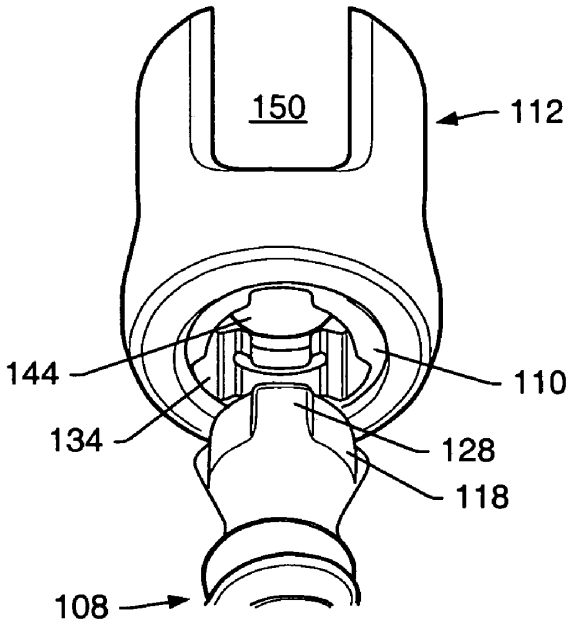

FIG. 10A

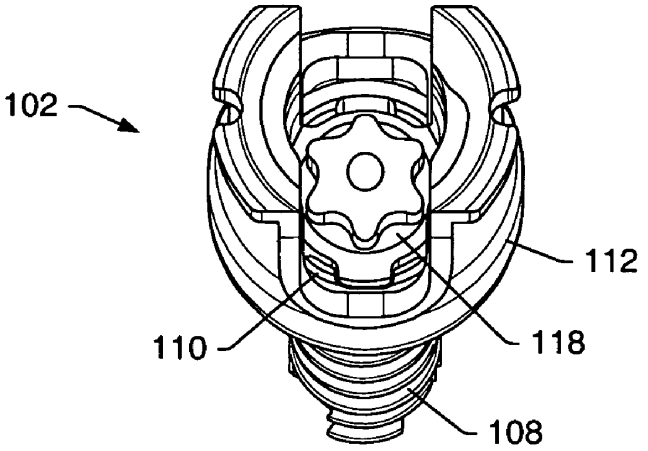

FIG. 10B

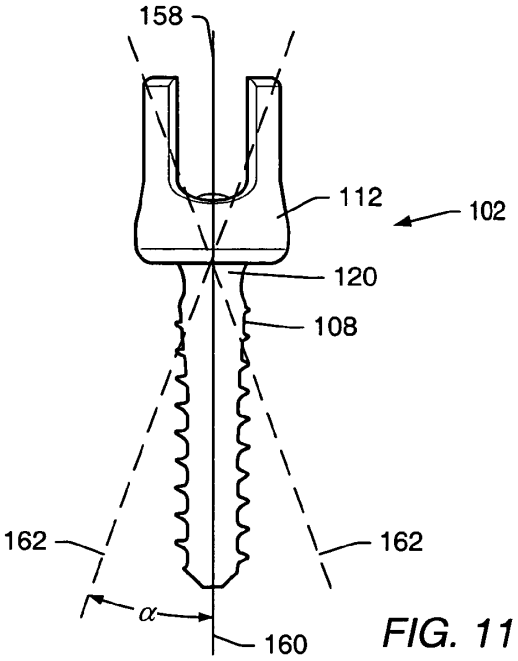

FIG. 11

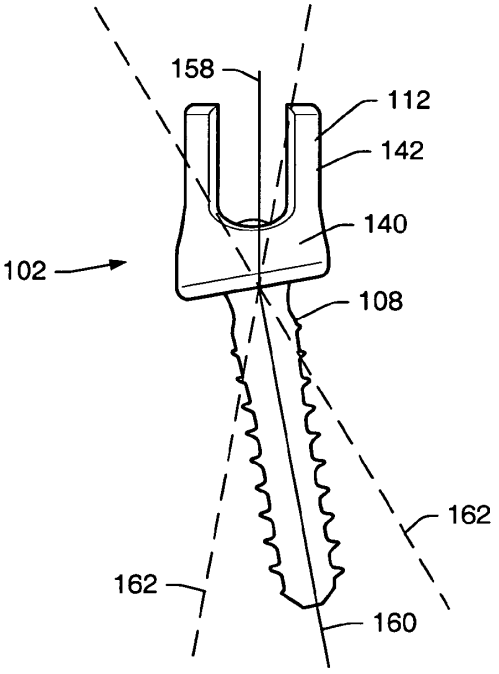

FIG. 12A

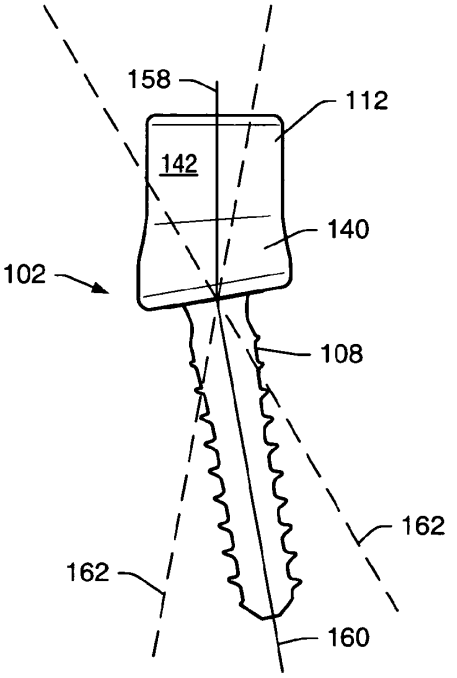

FIG. 12B

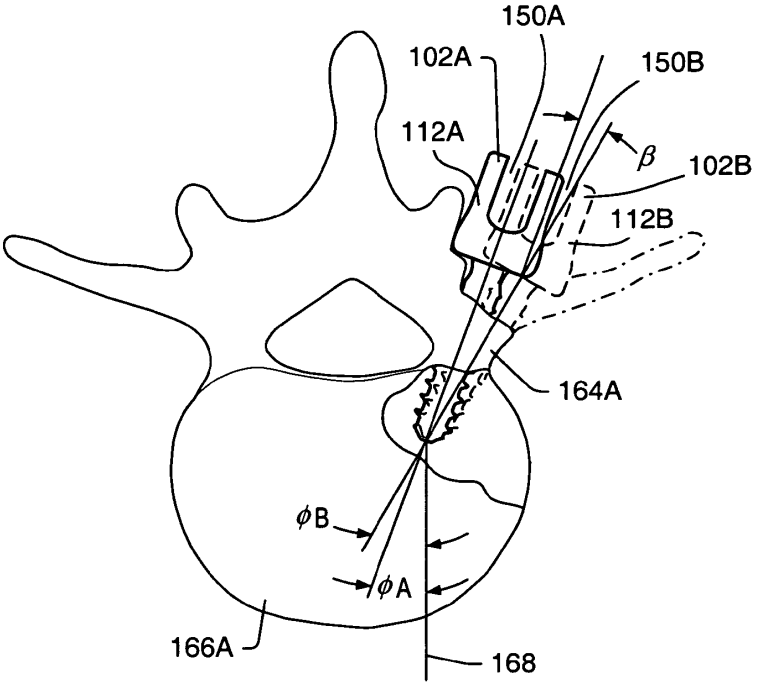

FIG. 13A

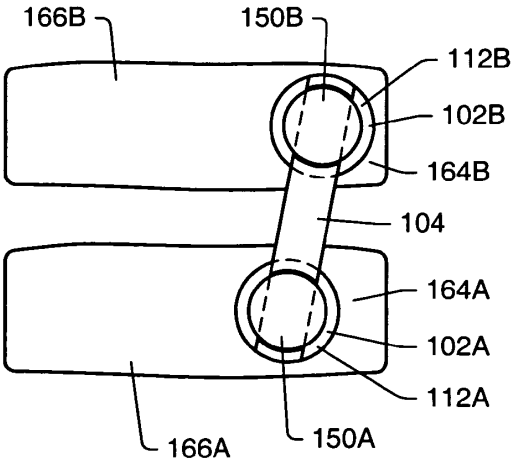

FIG. 13B

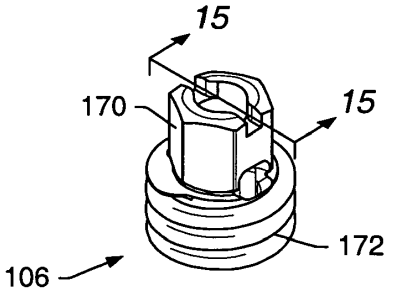

FIG. 14

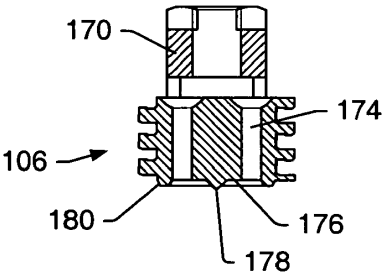

FIG. 15

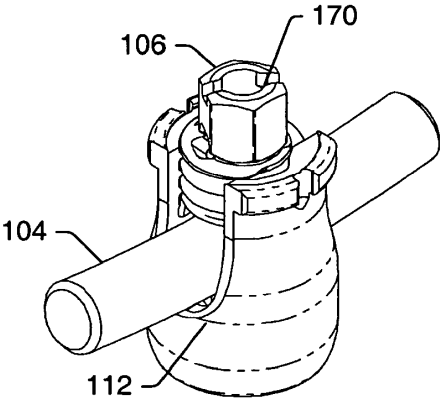

FIG. 16

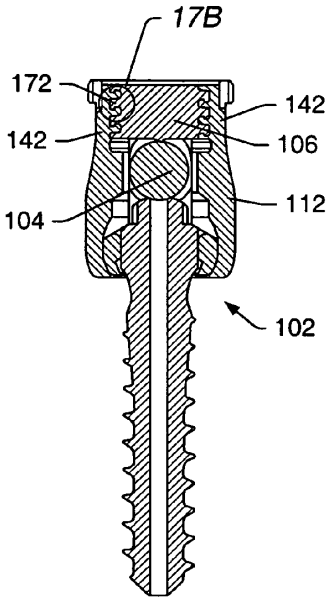

FIG. 17A

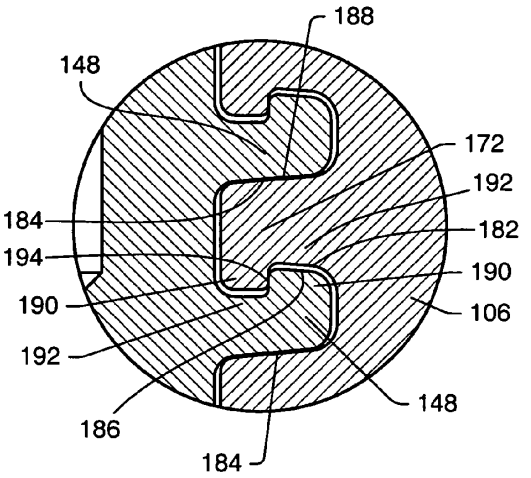

FIG. 17B

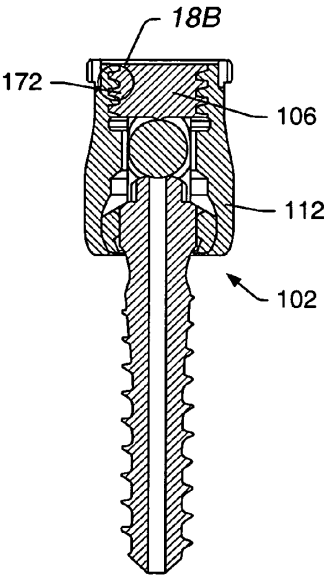

FIG. 18A

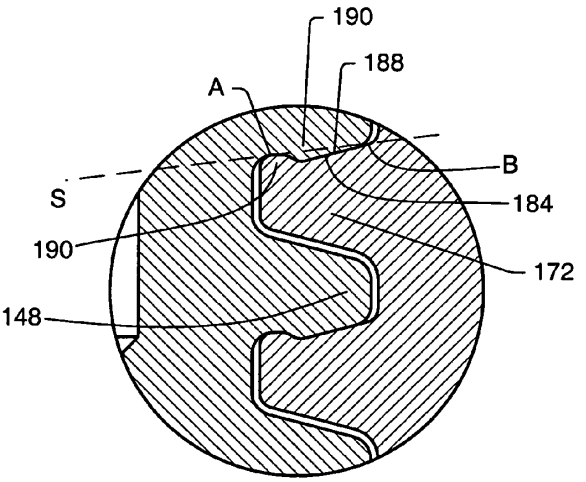

FIG. 18B

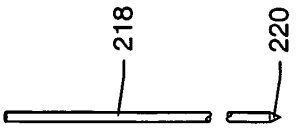

FIG. 22

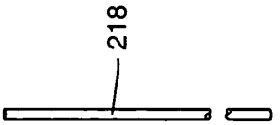

FIG. 23

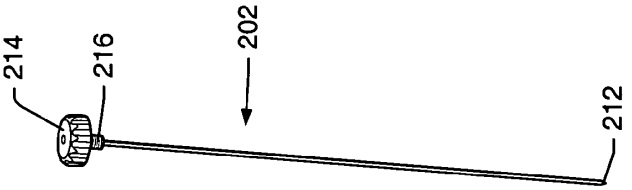

FIG. 21

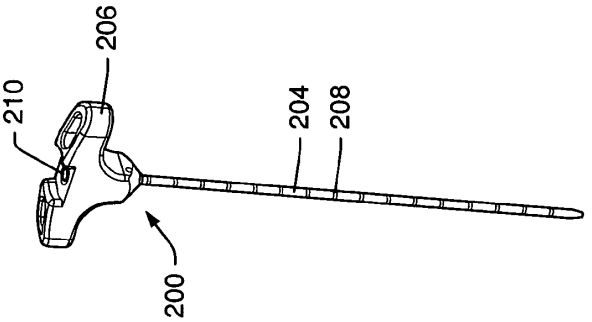

FIG. 20

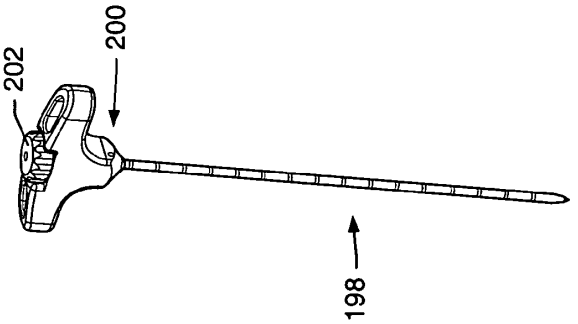

FIG. 19

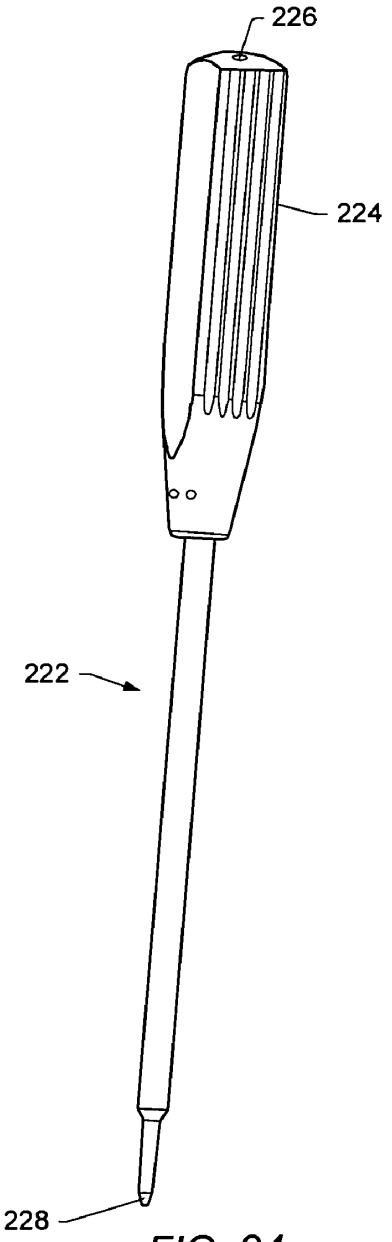

FIG. 24

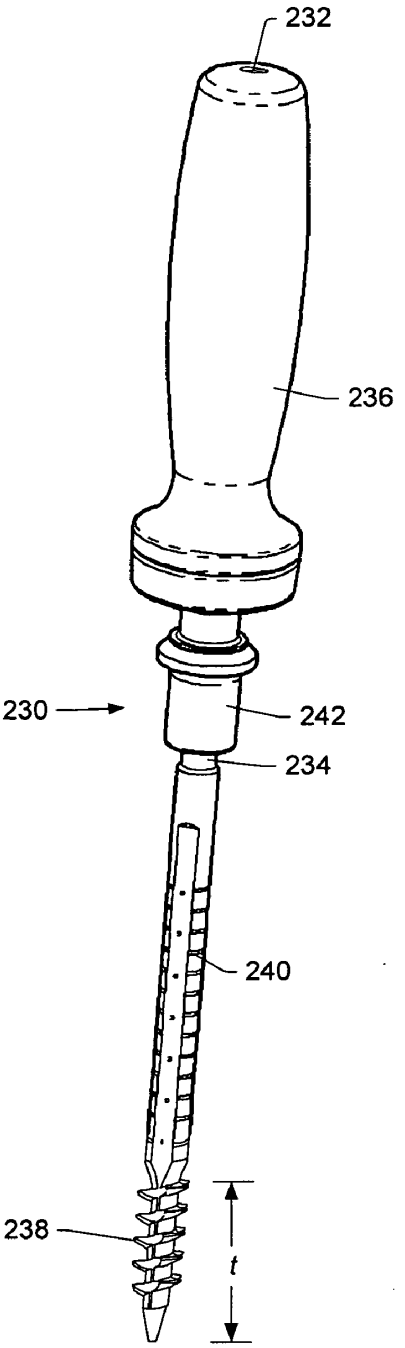

FIG. 25

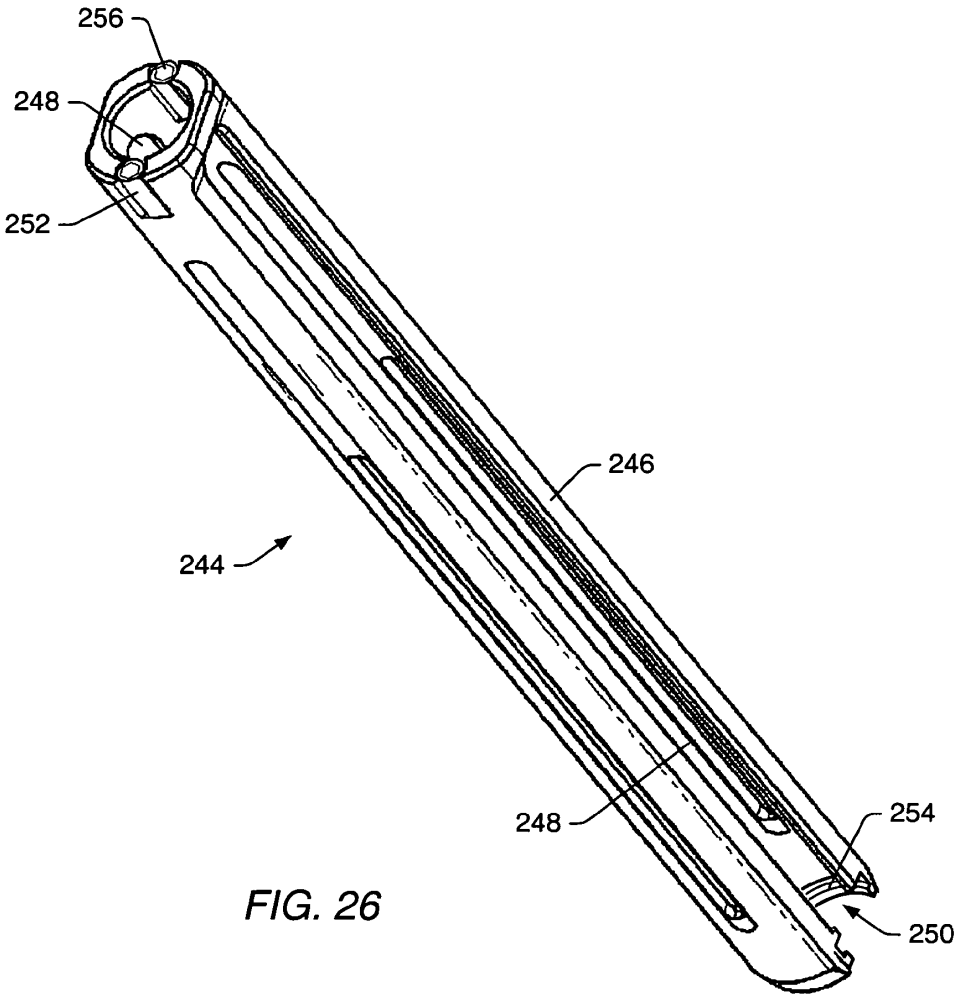

FIG. 26

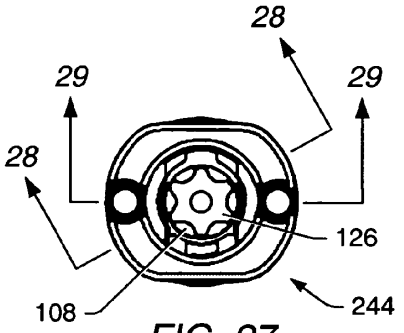

FIG. 27

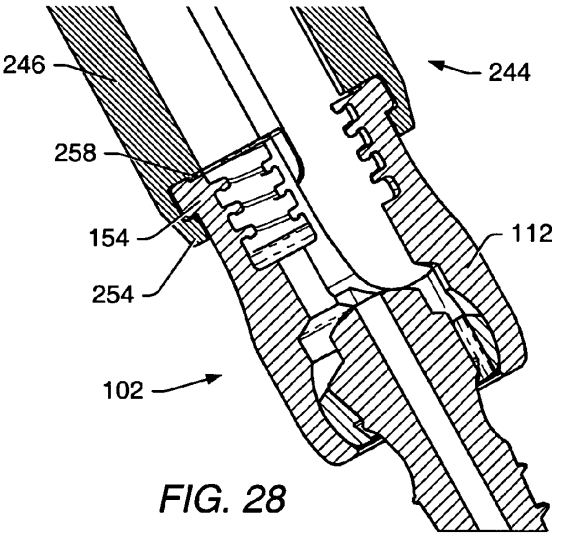

FIG. 28

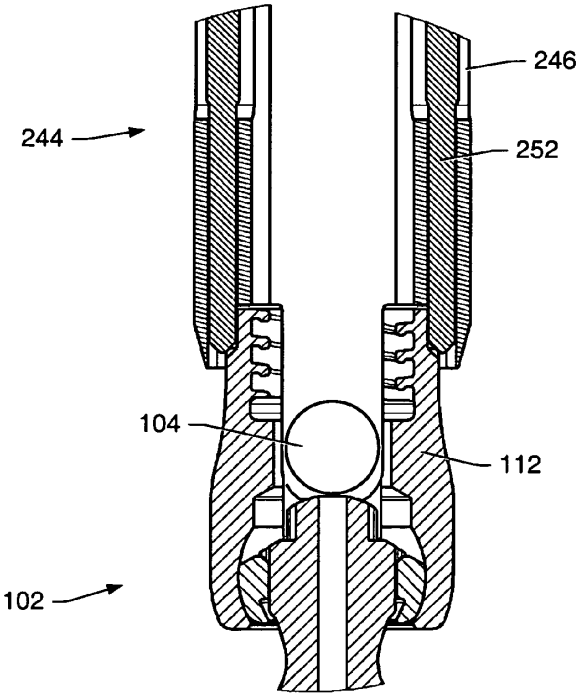

FIG. 29

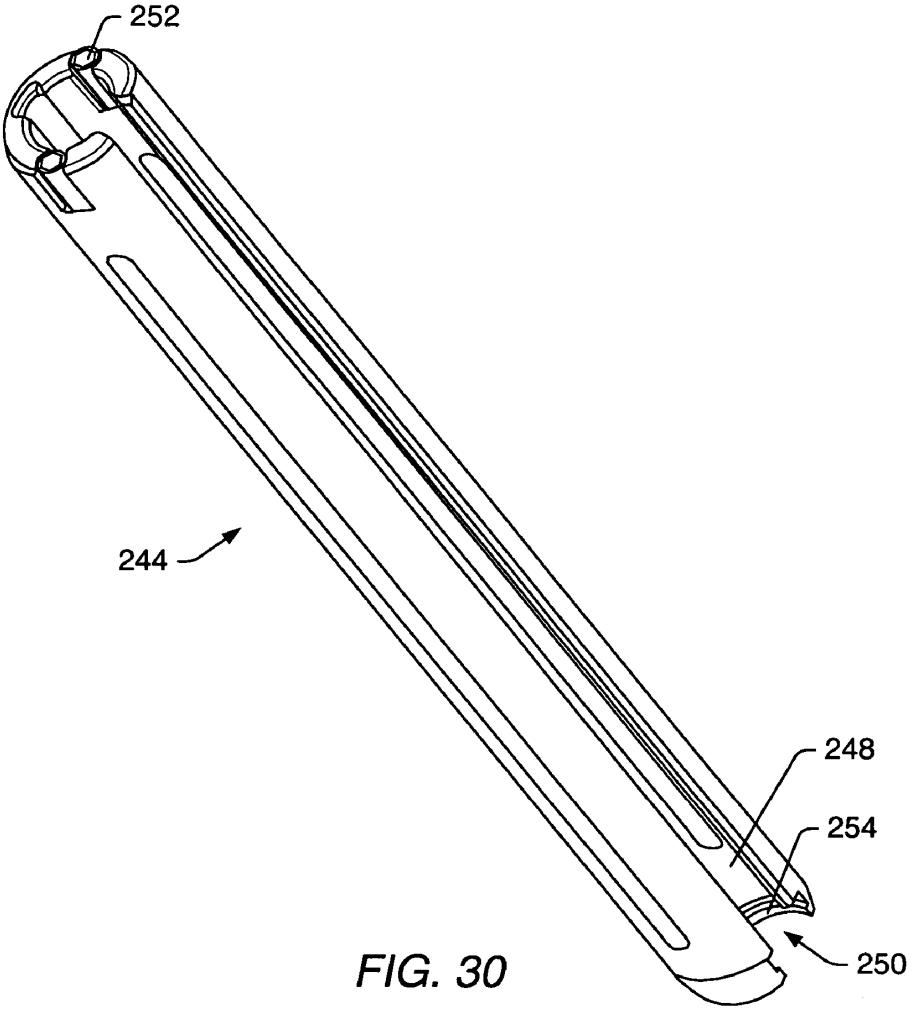

FIG. 30

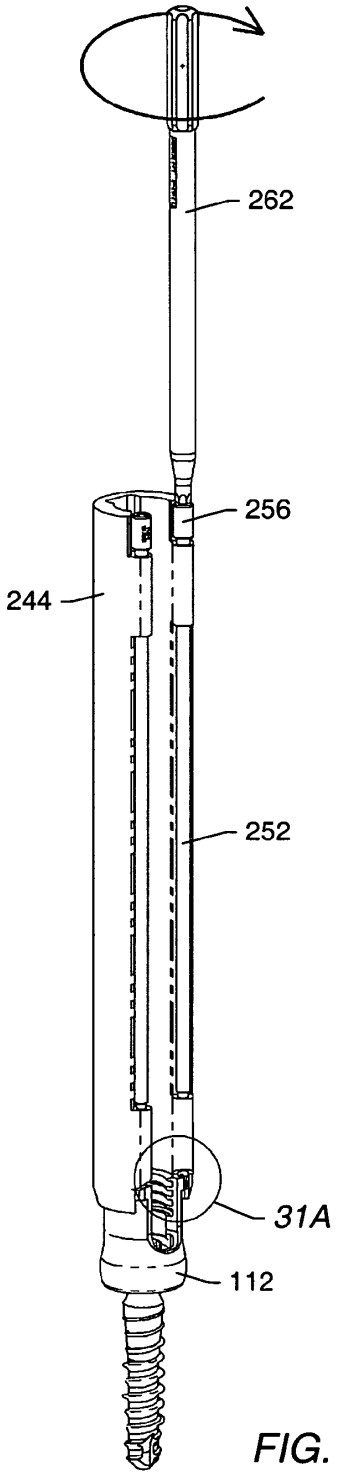

FIG. 31

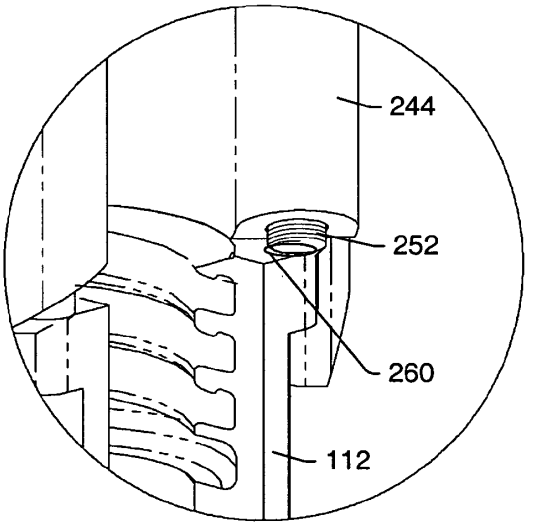

FIG. 31A

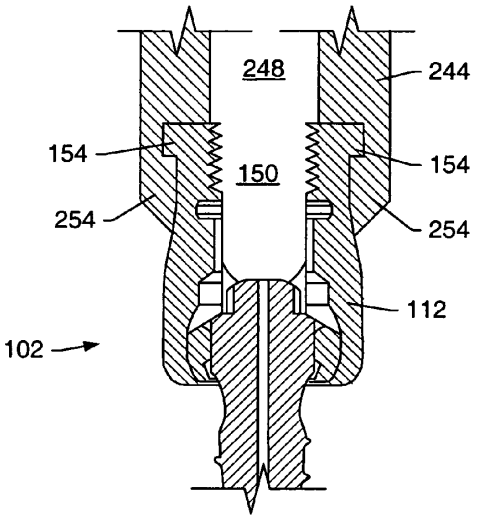

FIG. 32

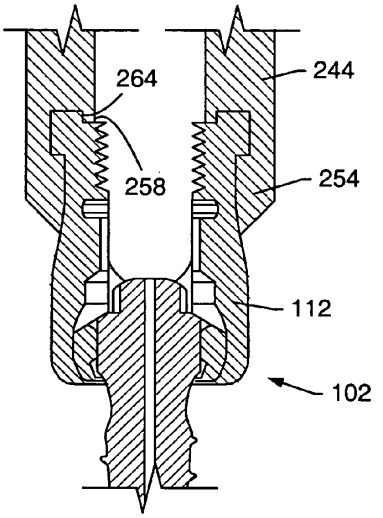

FIG. 33

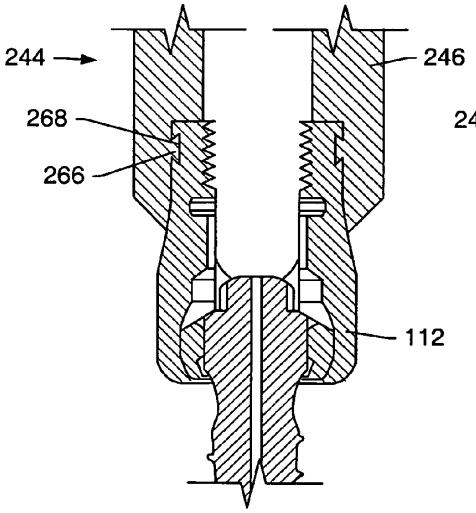

FIG. 34

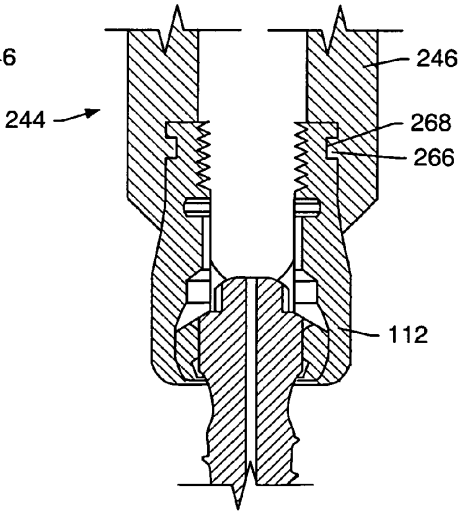

FIG. 35

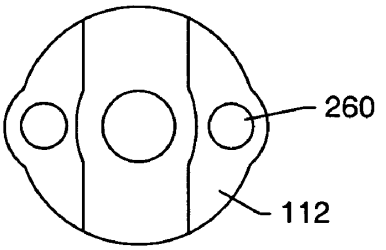

FIG. 36

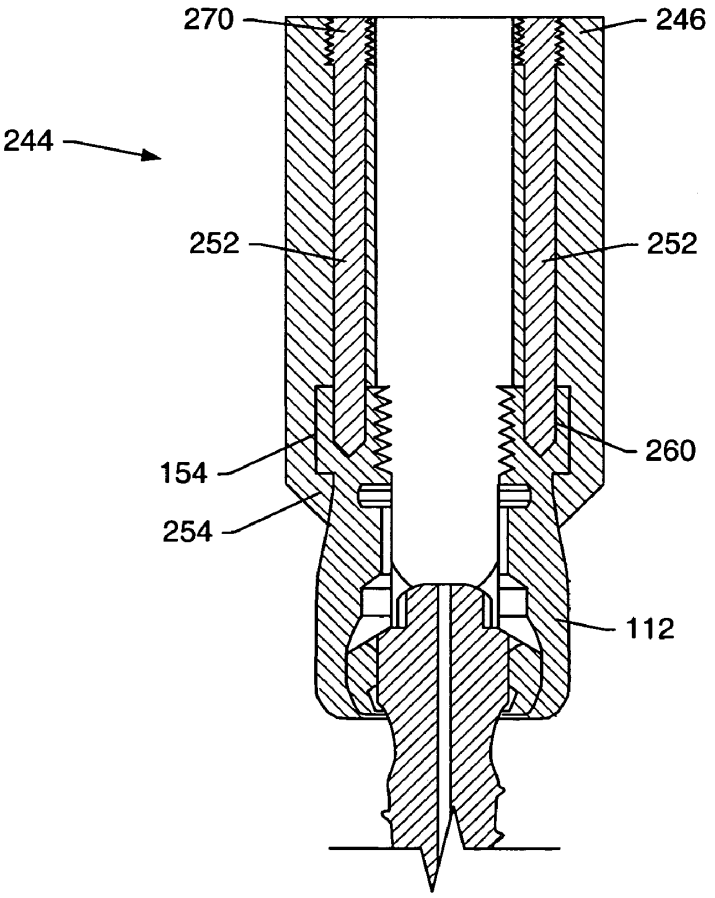

FIG. 37

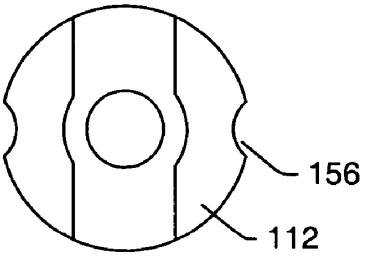

FIG. 38

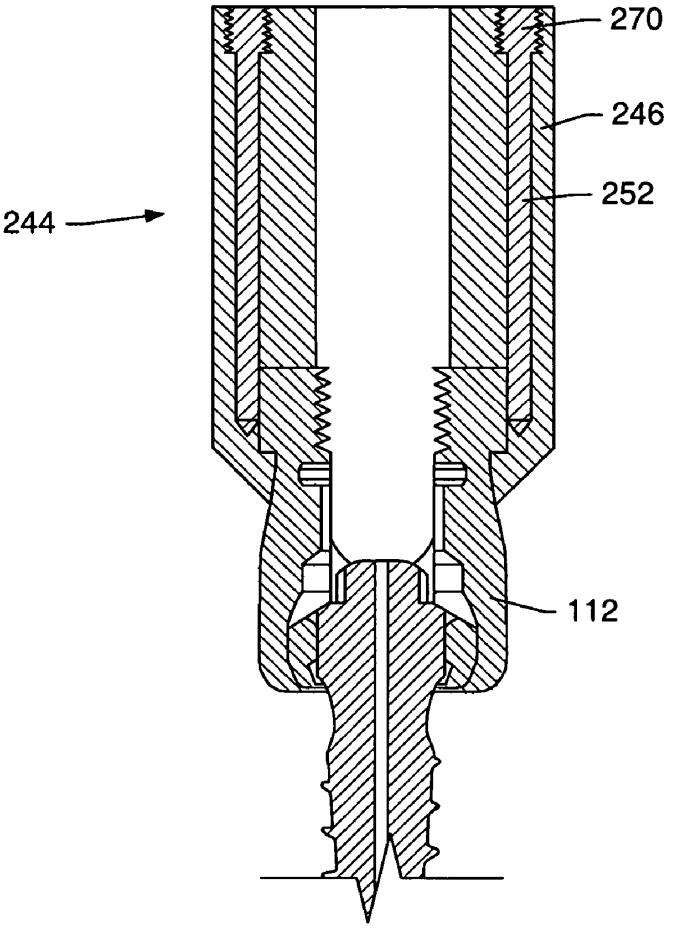

FIG. 39

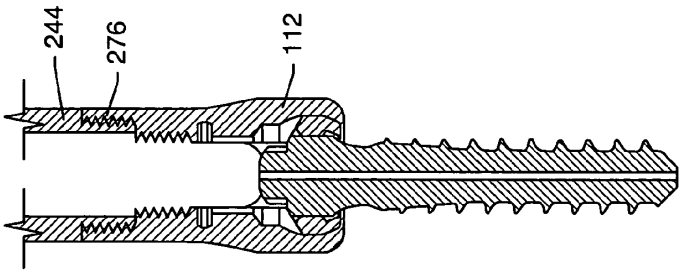

FIG. 43

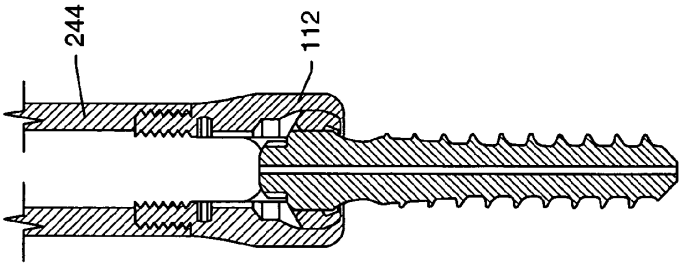

FIG. 42

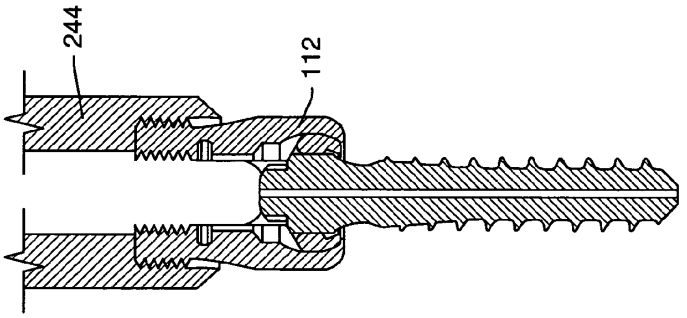

FIG. 41

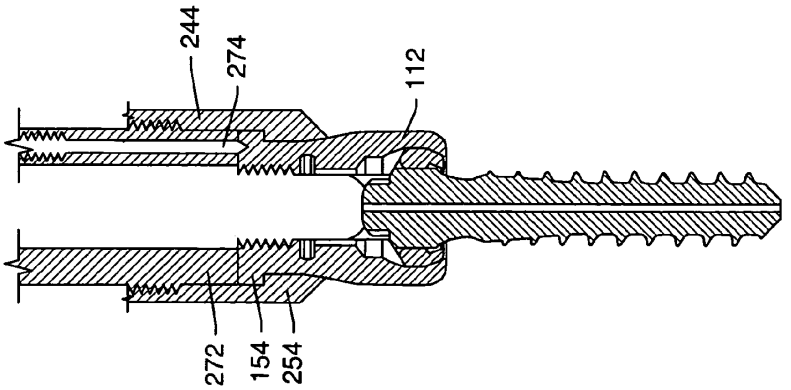

FIG. 40

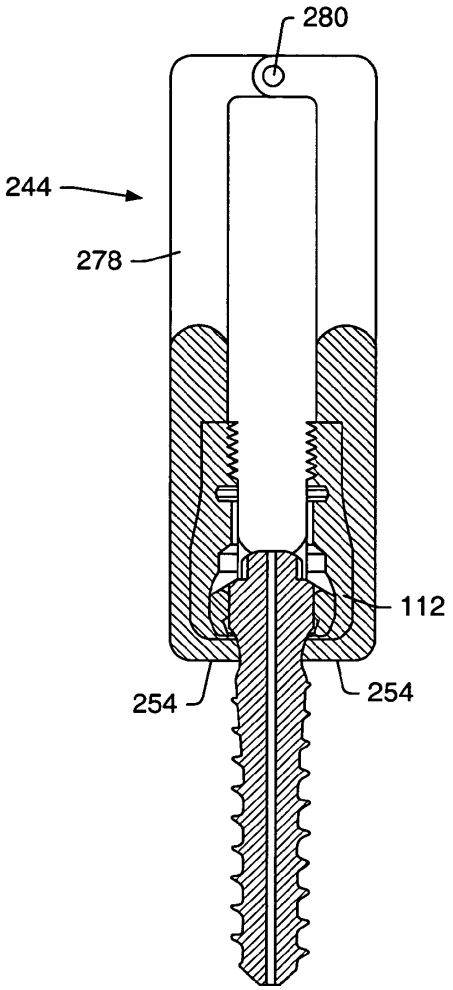

FIG. 44

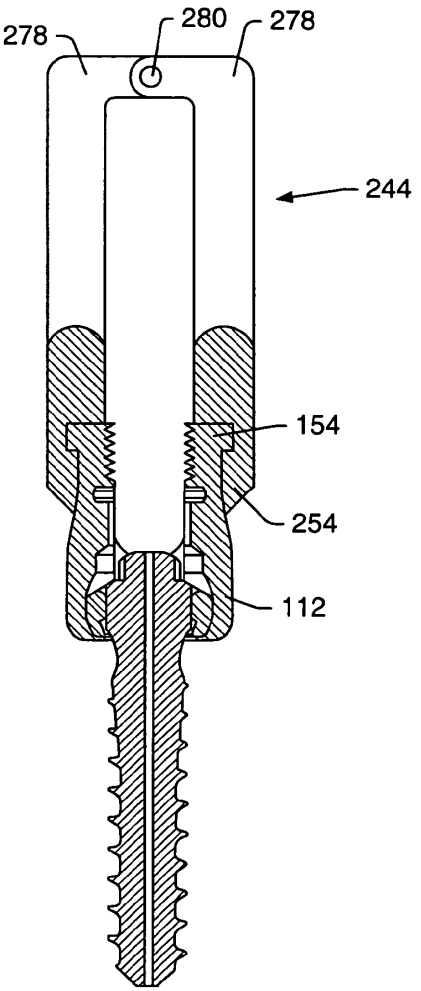

FIG. 45

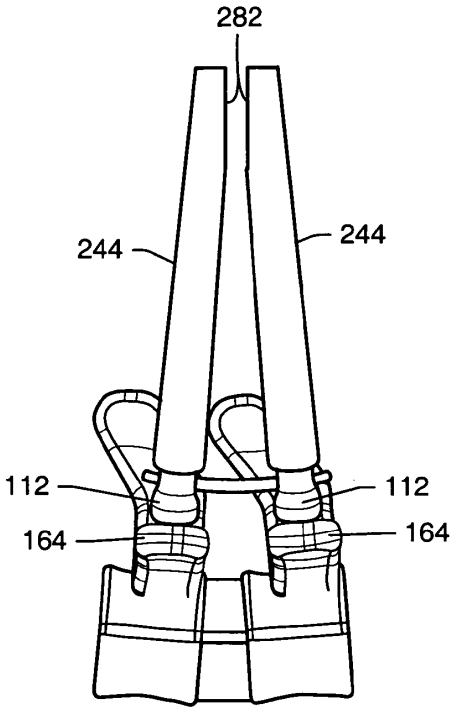

FIG. 46

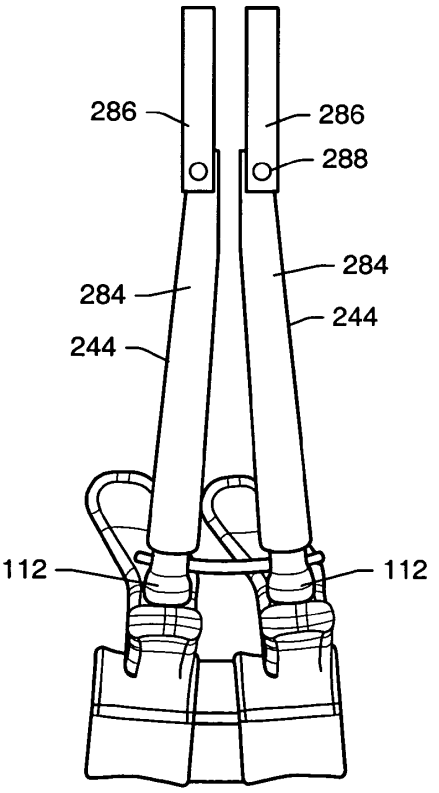

FIG. 47

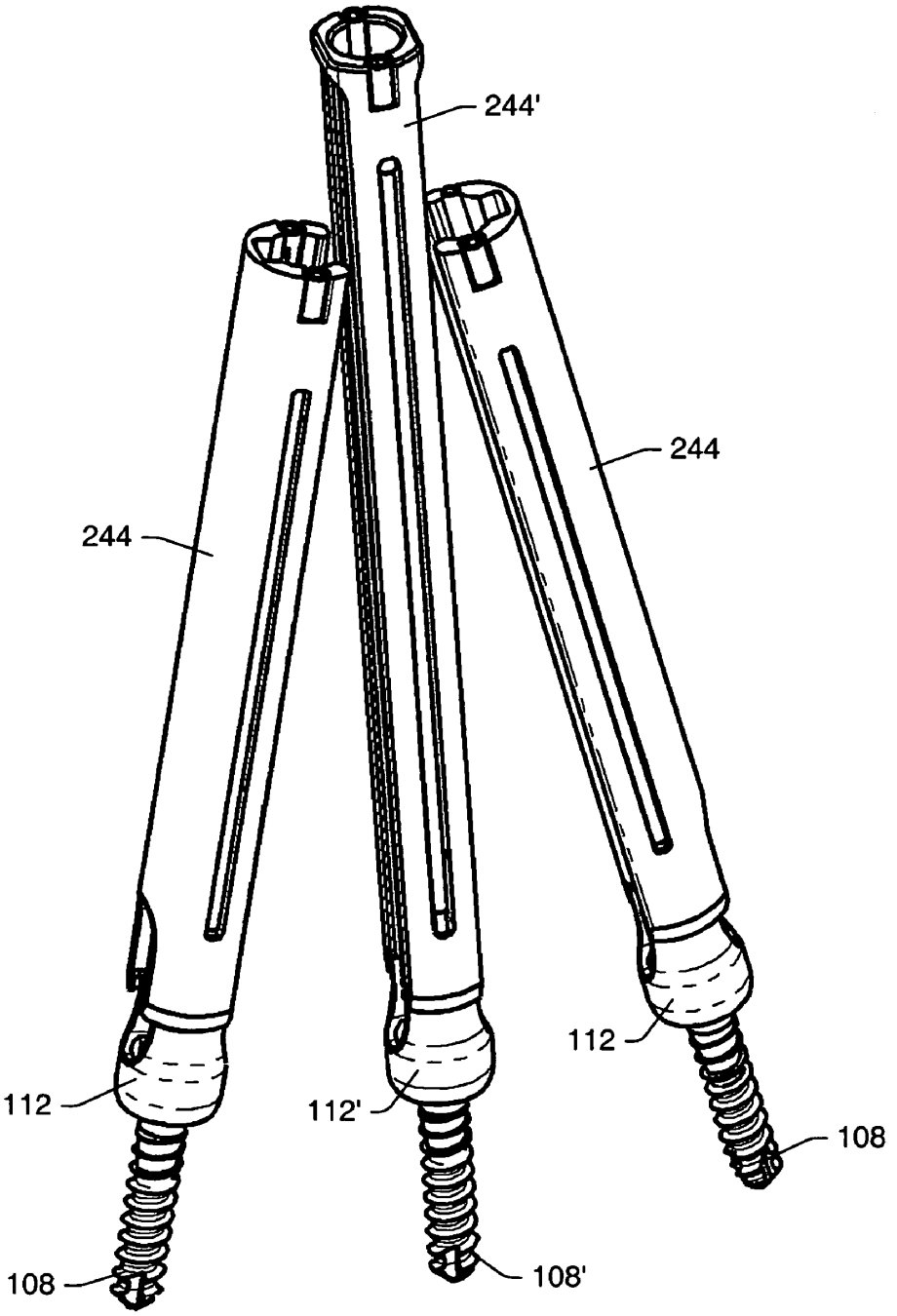

FIG. 48

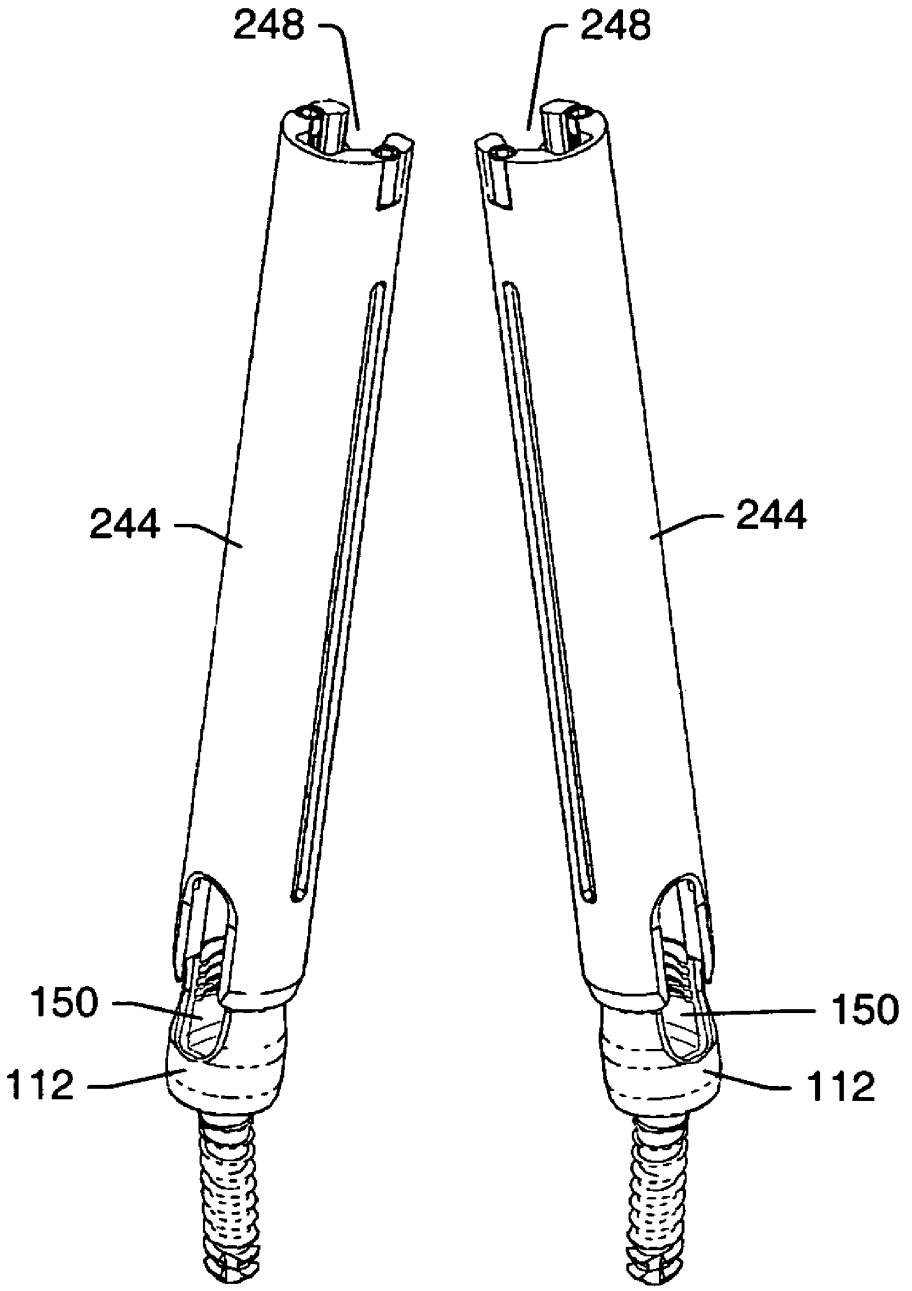

FIG. 49

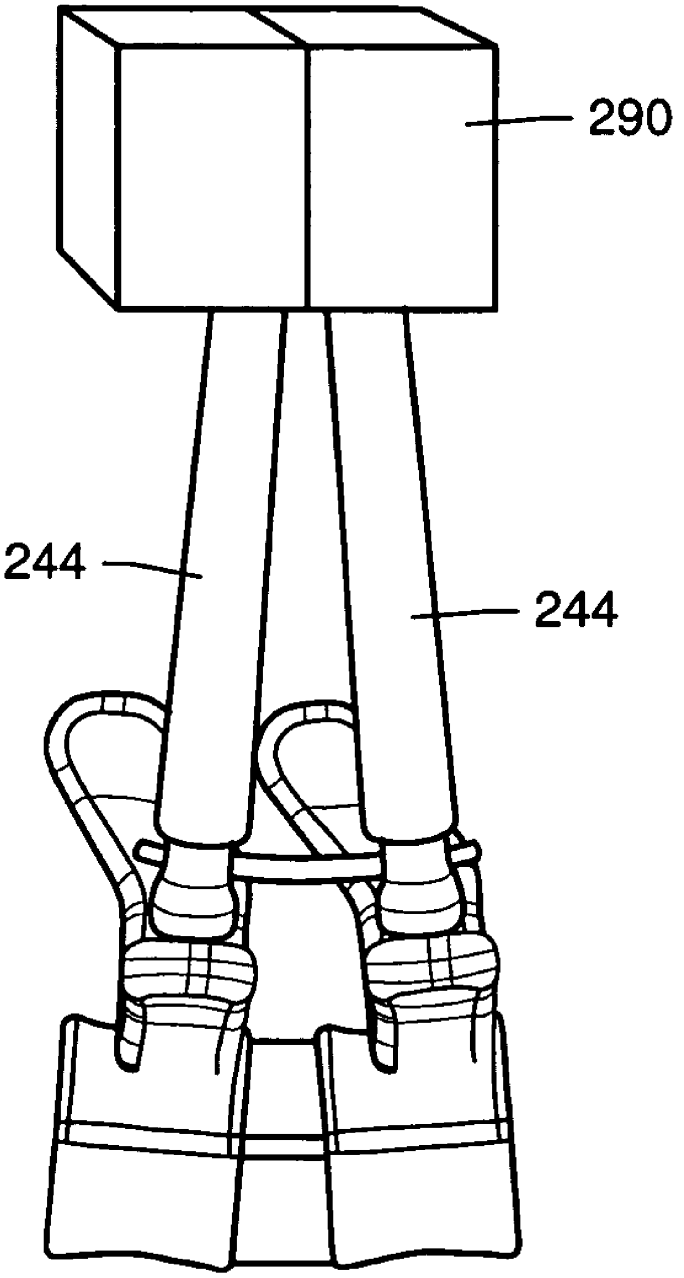

FIG. 50

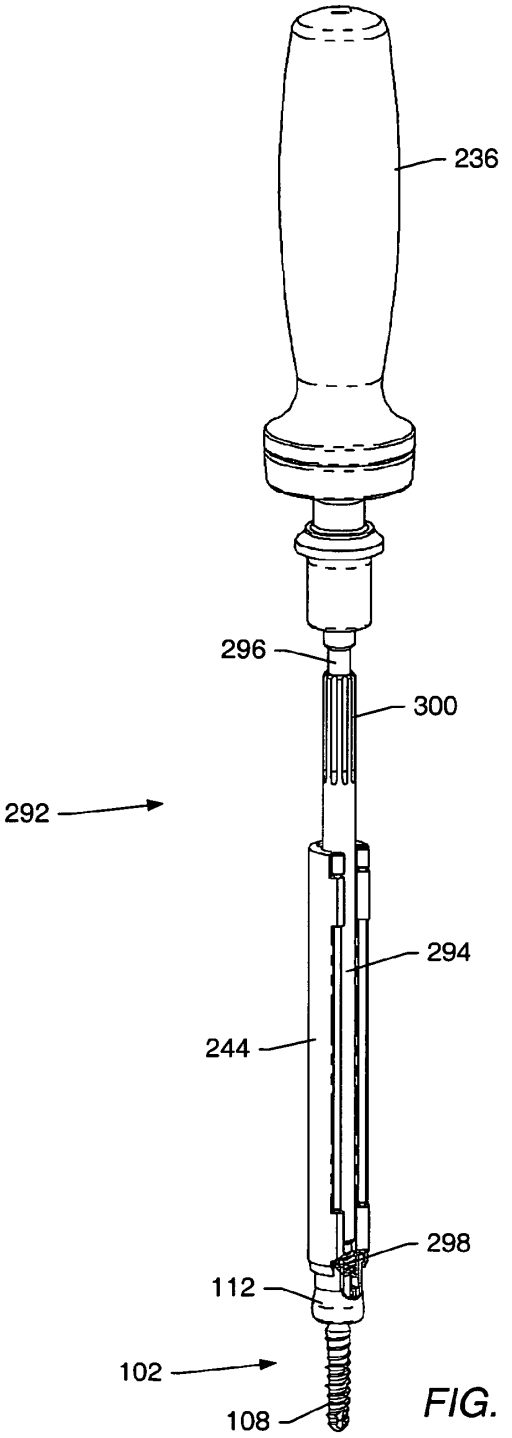

FIG. 51

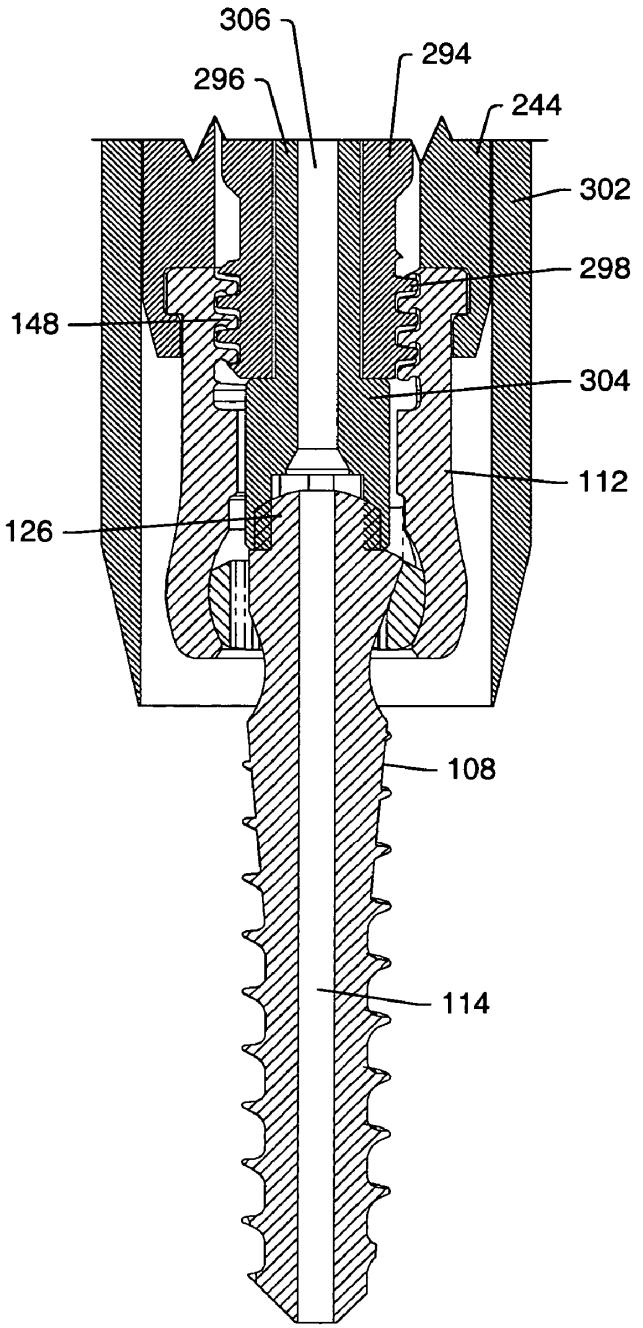

FIG. 52

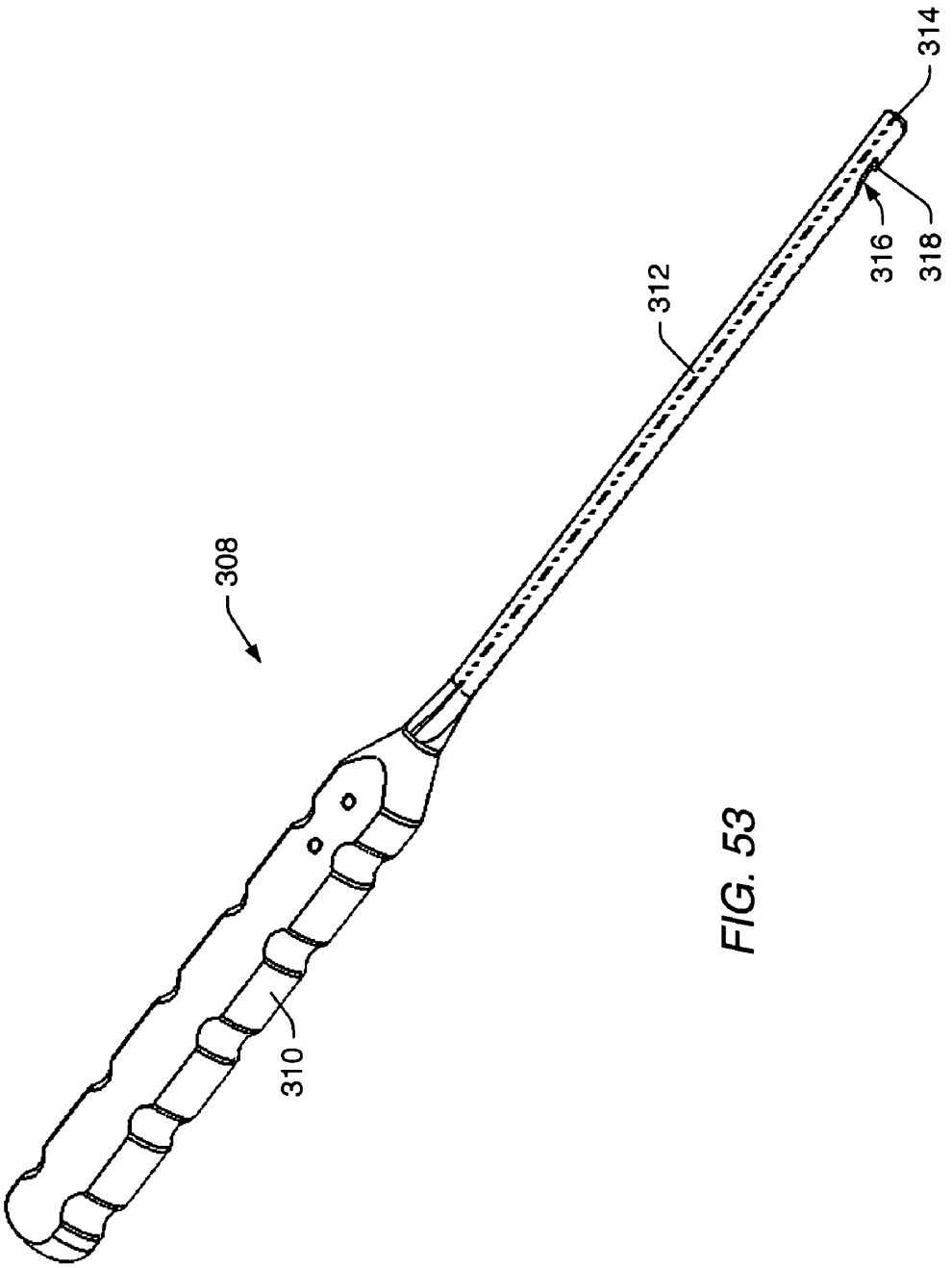

FIG. 53

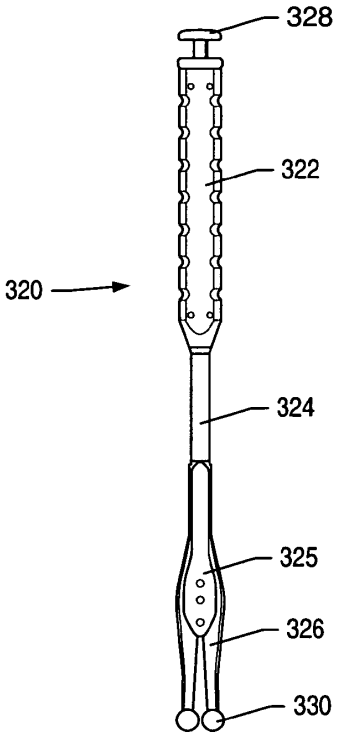

FIG. 54

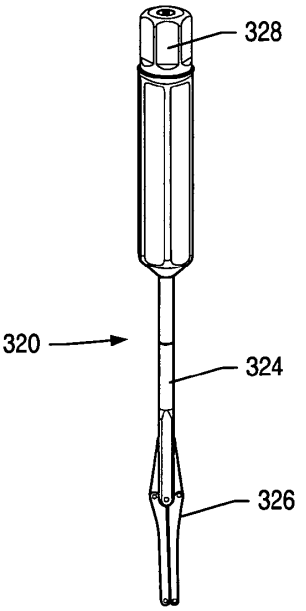

FIG. 55

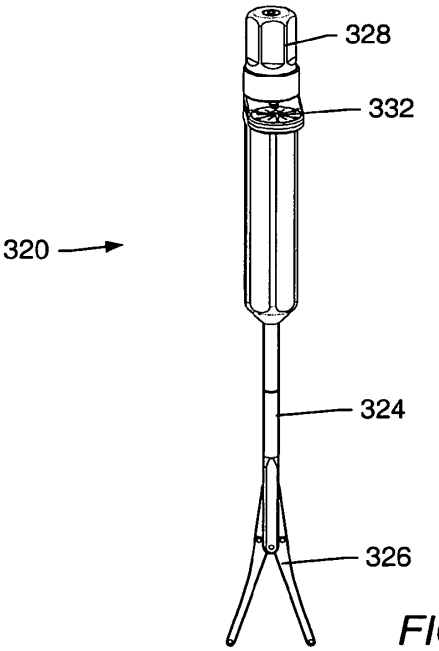

FIG. 56

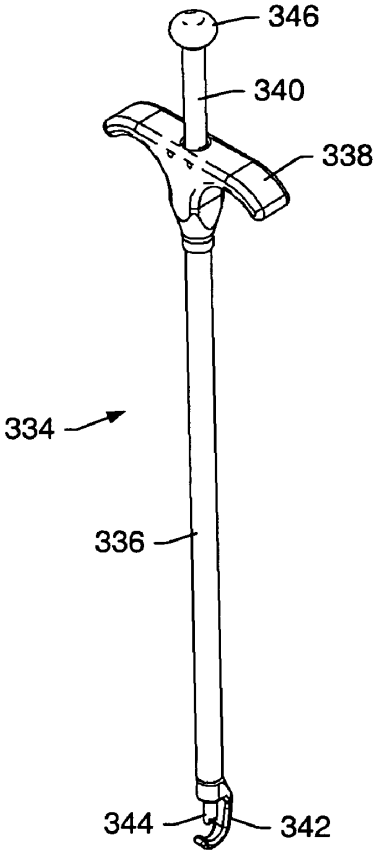

FIG. 57

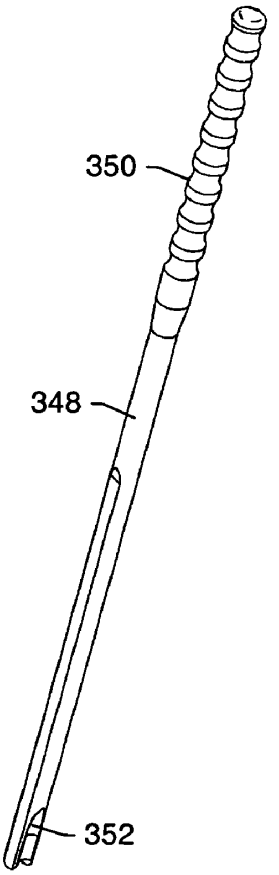

FIG. 58

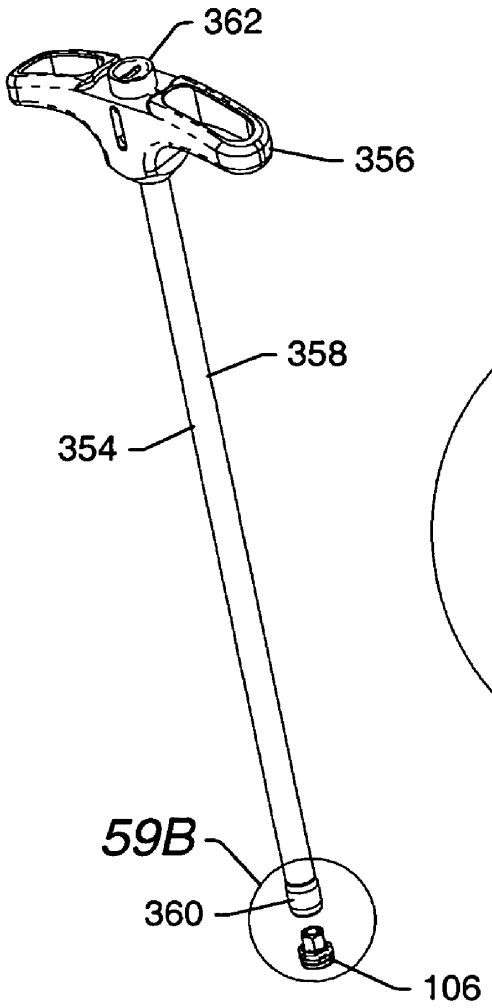

FIG. 59A

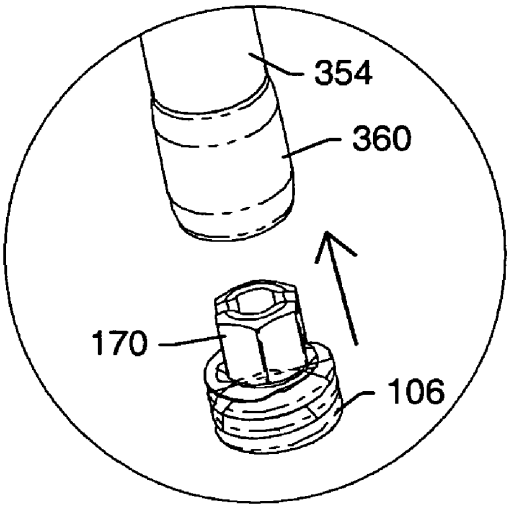

FIG. 59B

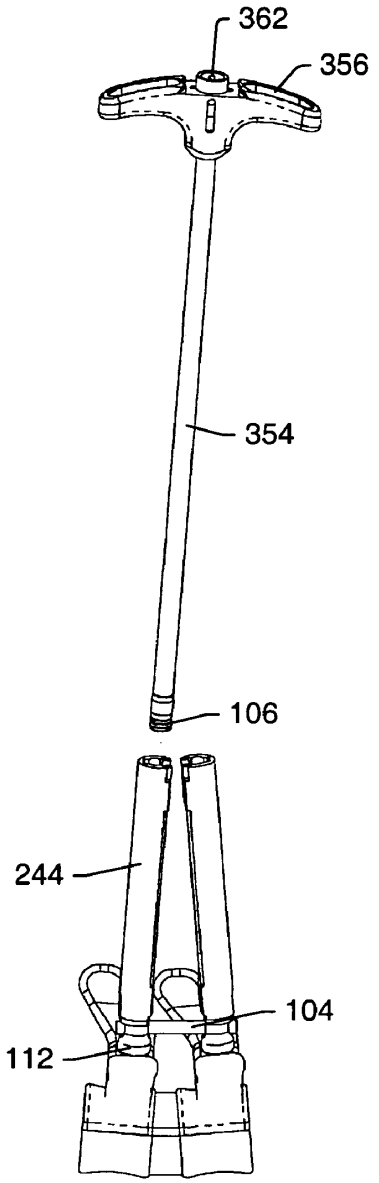

FIG. 60A

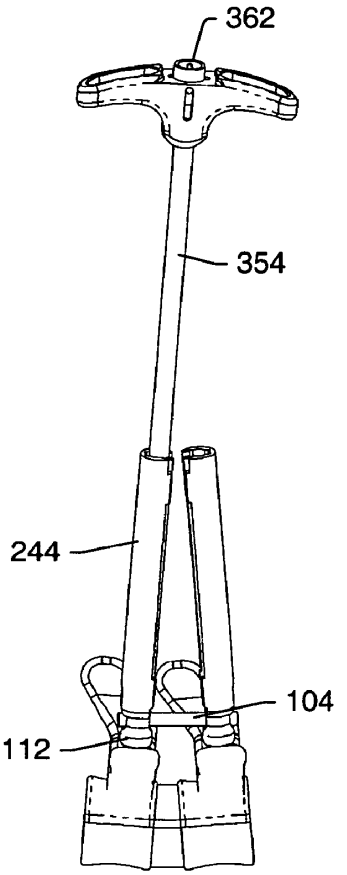

FIG. 60B

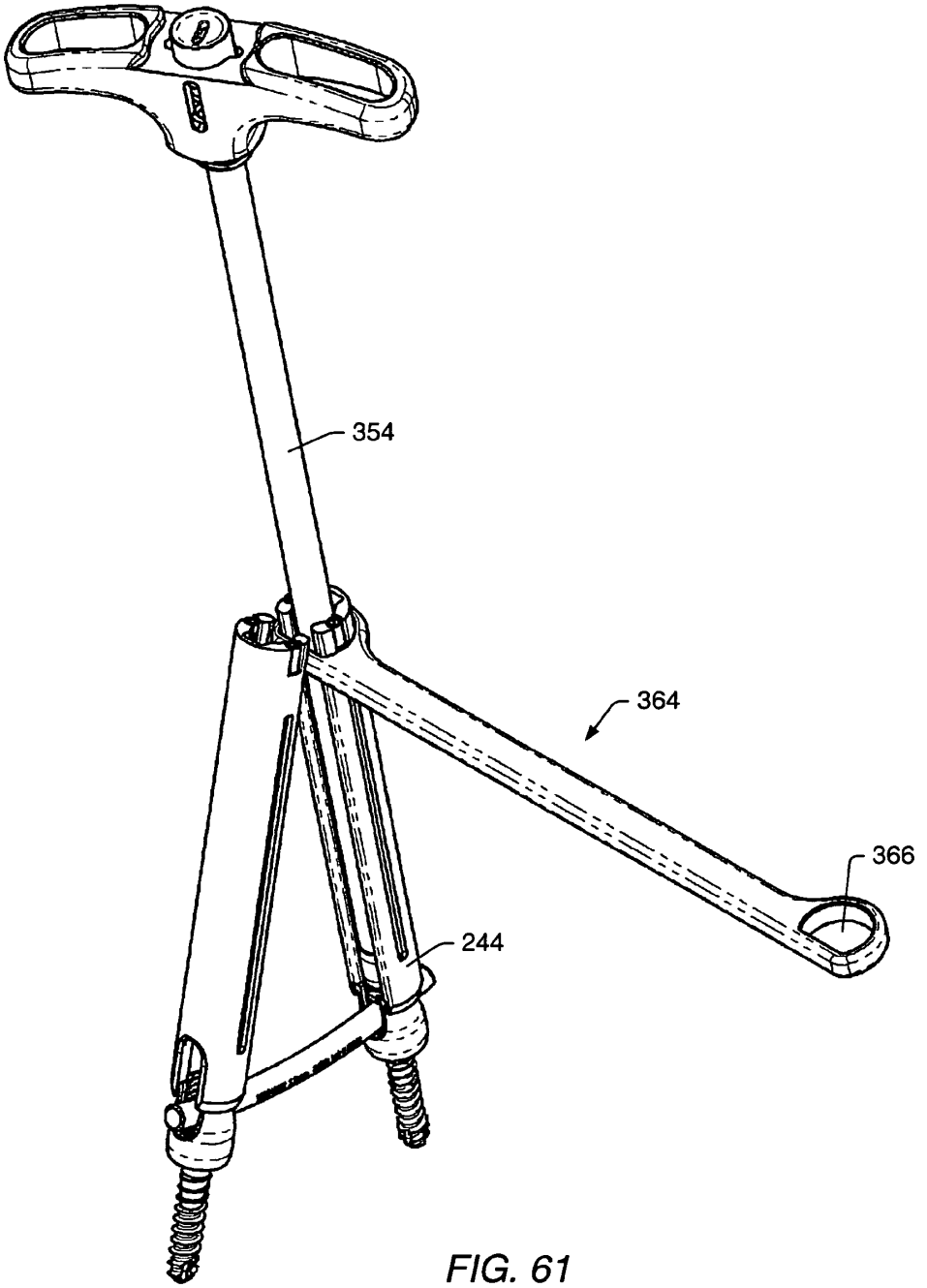

FIG. 61

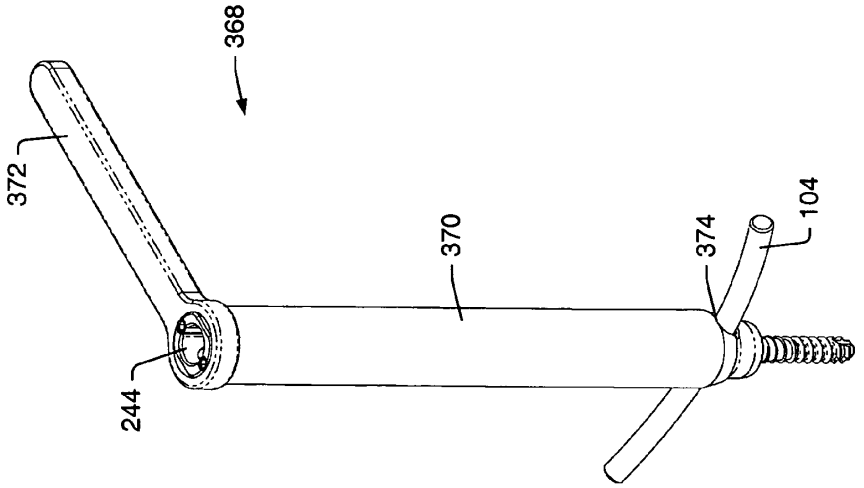

FIG. 63

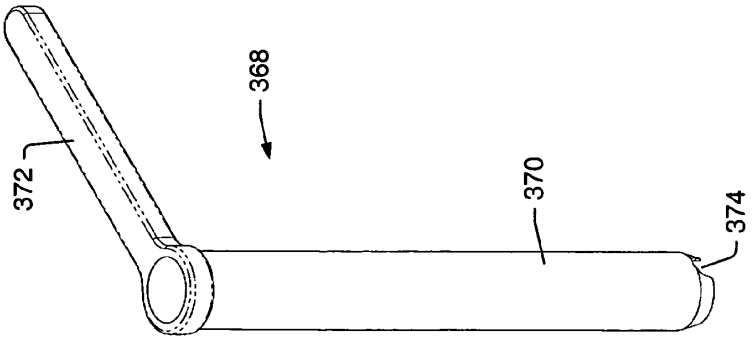

FIG. 62

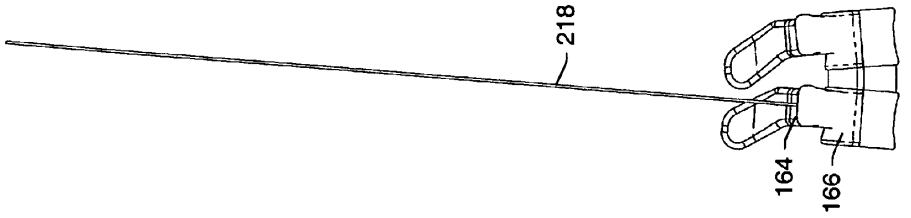

FIG. 64E

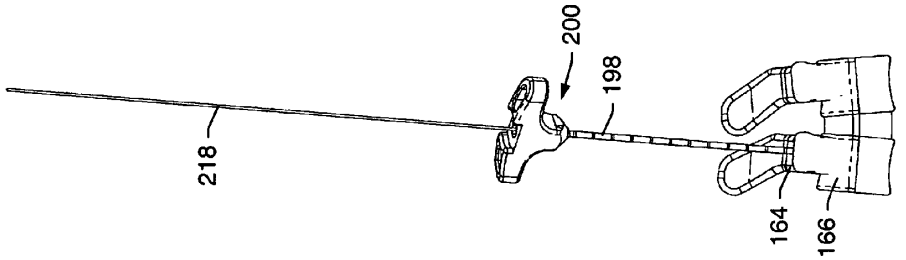

FIG. 64D

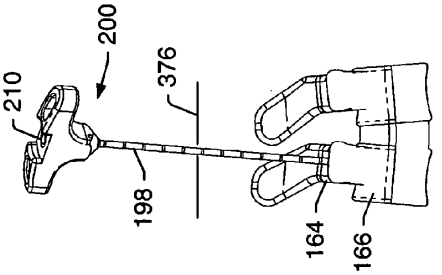

FIG. 64C

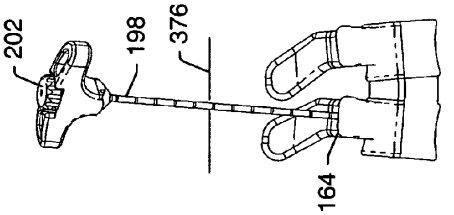

FIG. 64B

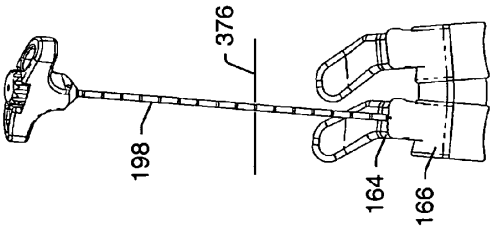

FIG. 64A

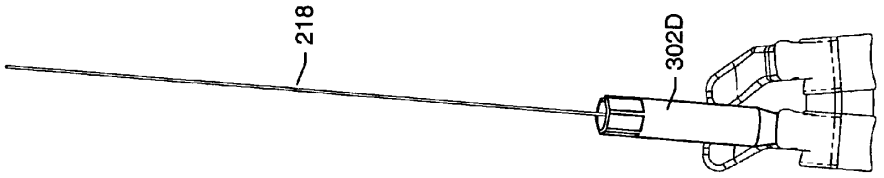

FIG. 65D

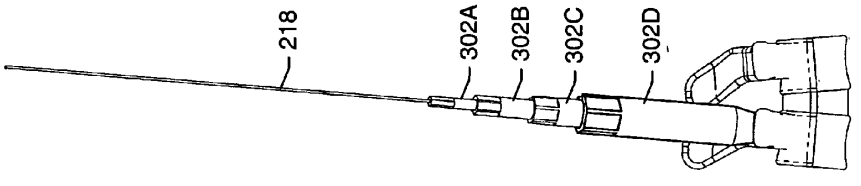

FIG. 65C

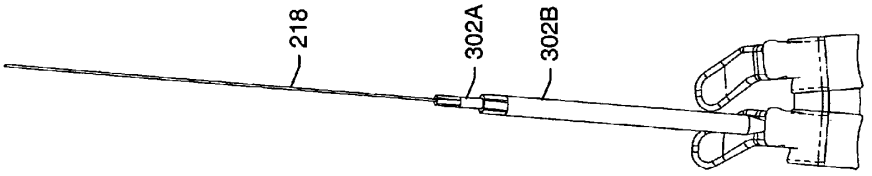

FIG. 65B

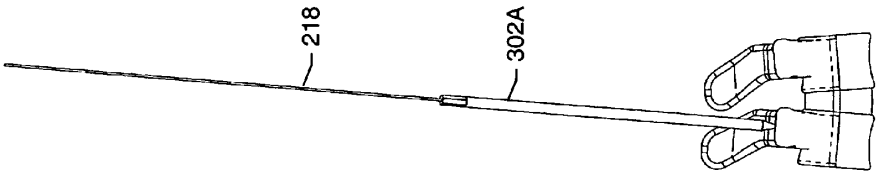

FIG. 65A

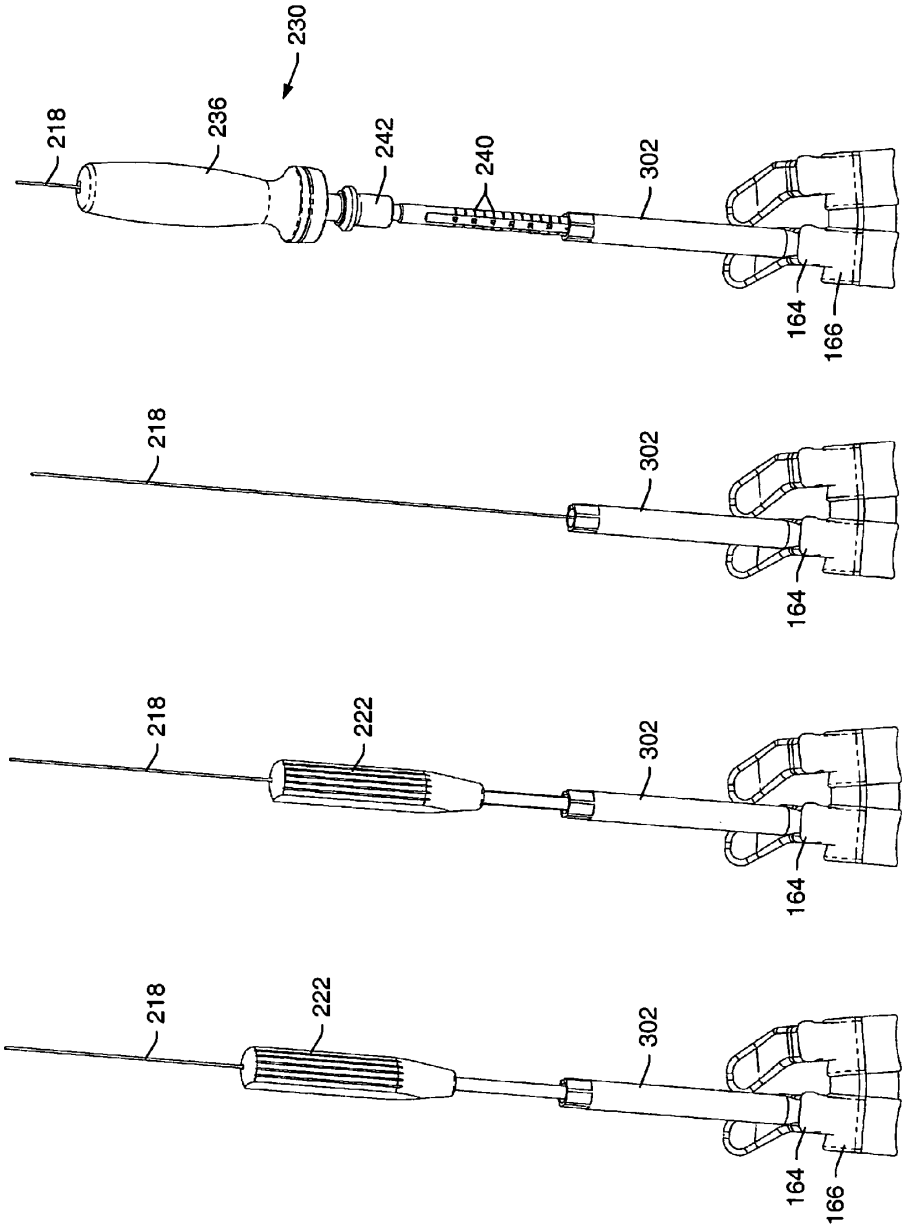

FIG. 66D

FIG. 66C

FIG. 66B

FIG. 66A

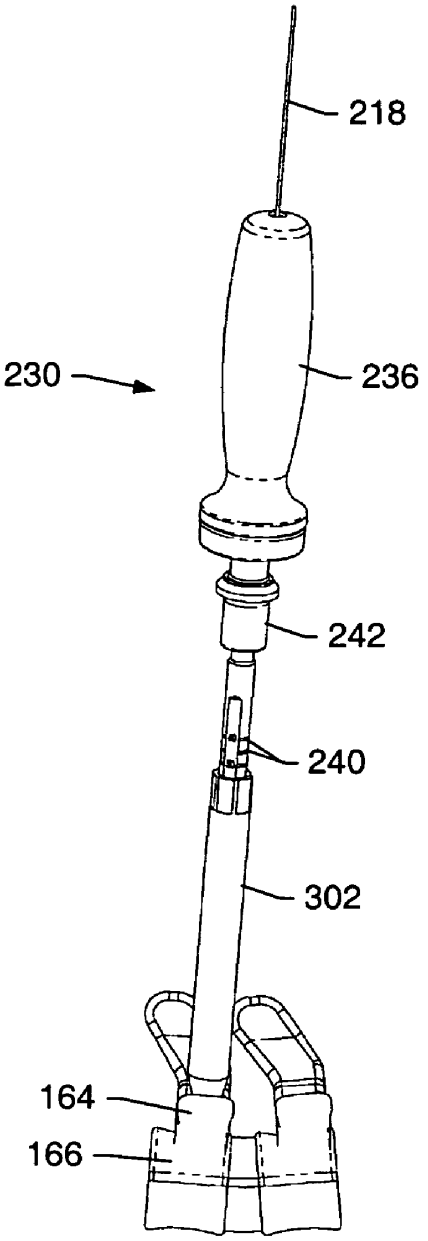

FIG. 66E

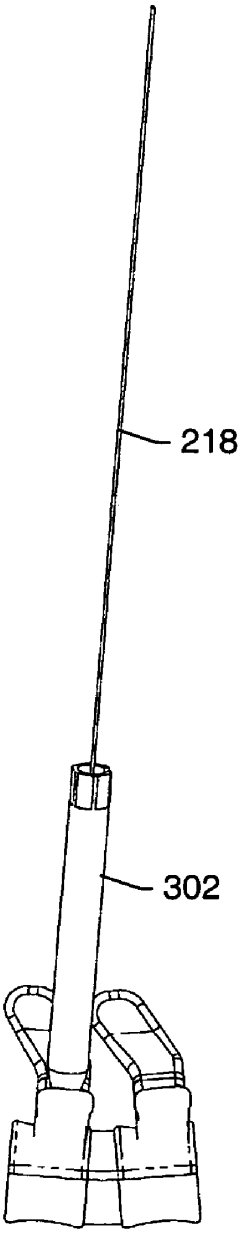

FIG. 66F

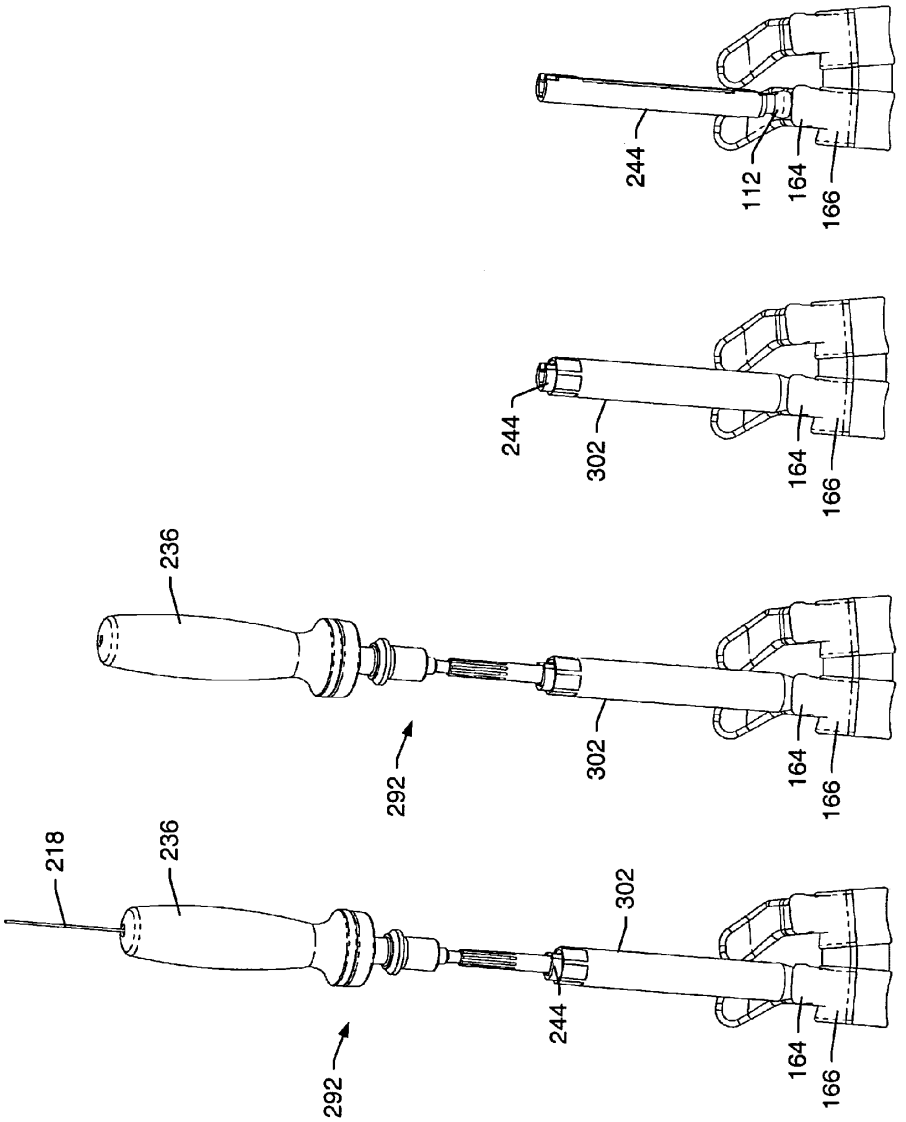

FIG. 67A

FIG. 67B

FIG. 67C

FIG. 67D

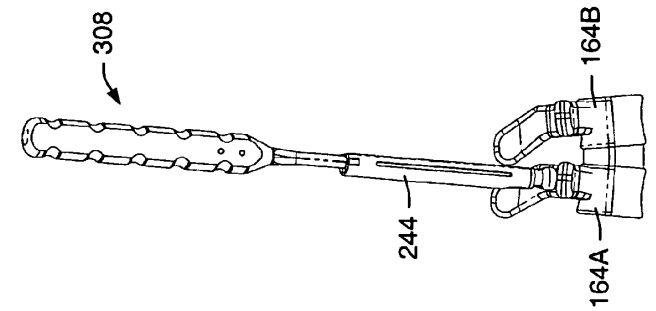

FIG. 68D

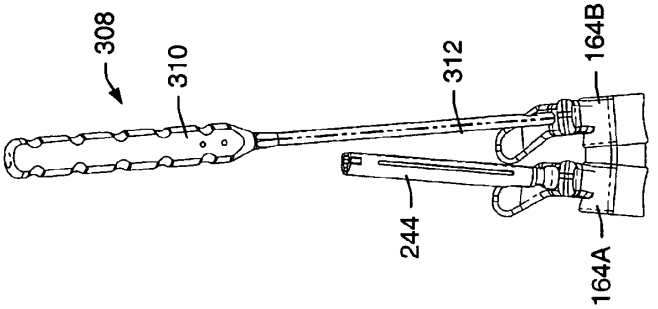

FIG. 68C

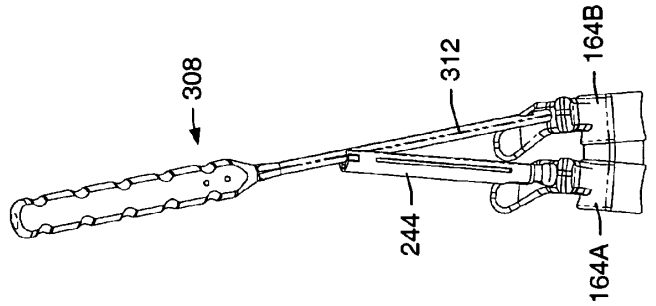

FIG. 68B

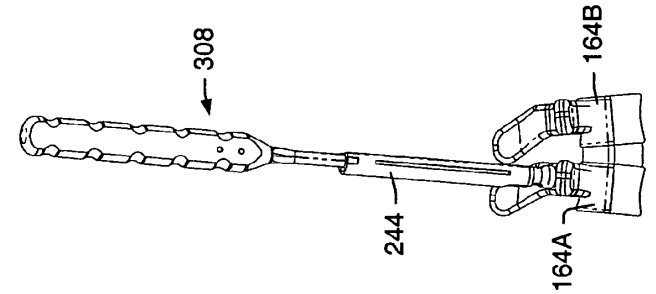

FIG. 68A

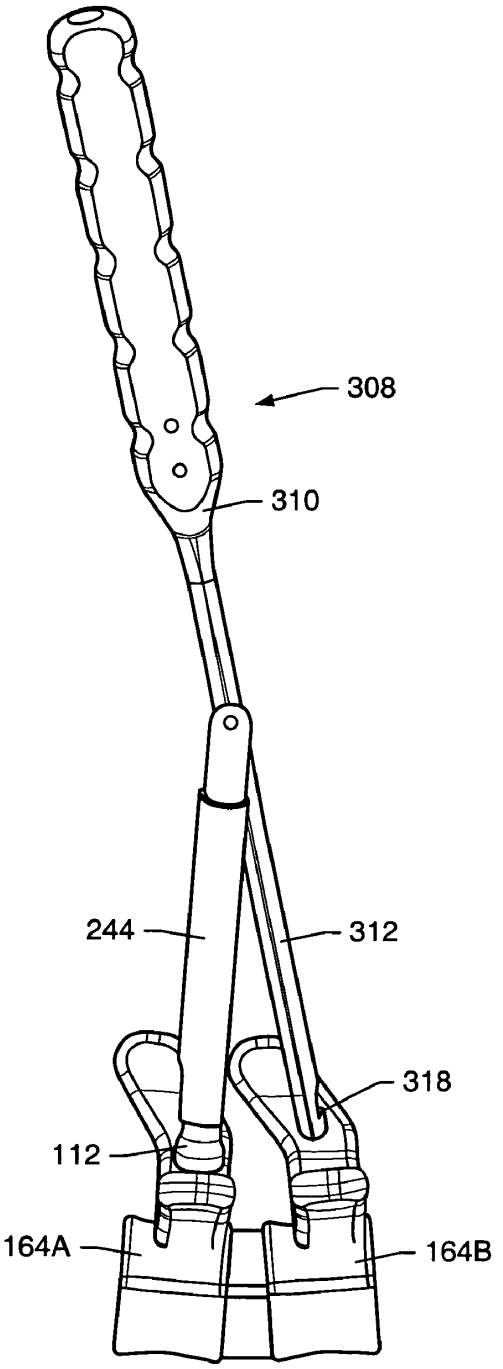

FIG. 69

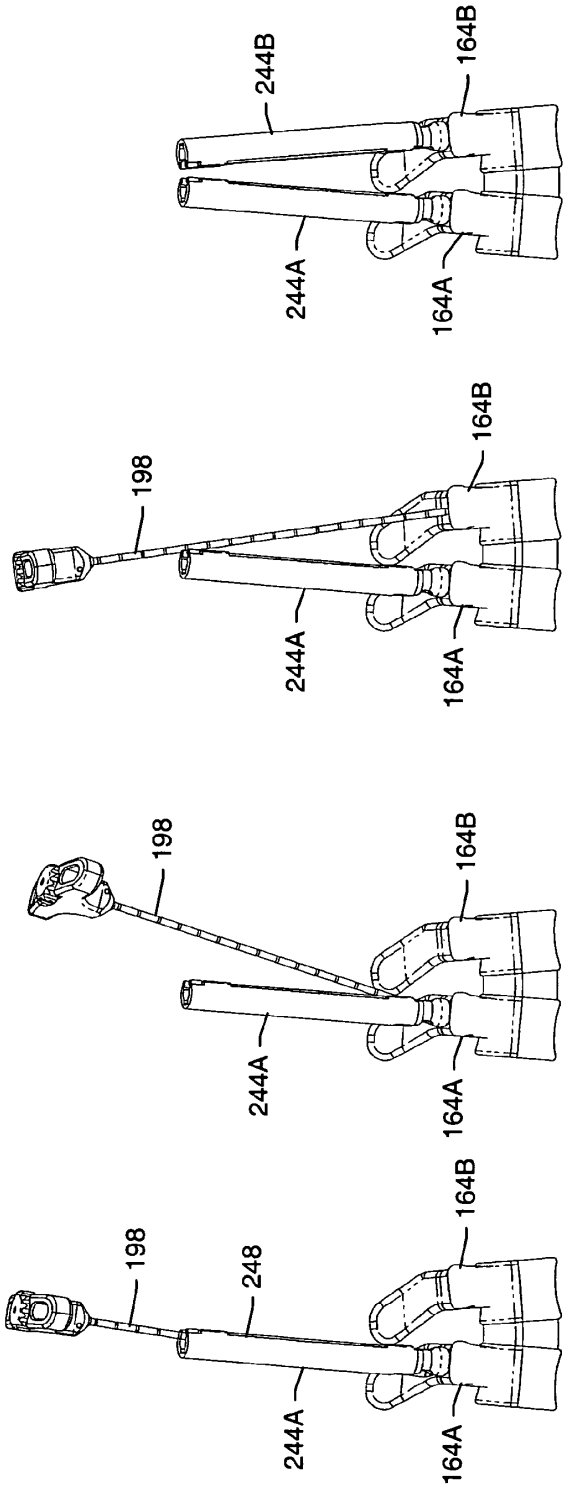

FIG. 70A

FIG. 70B

FIG. 70C

FIG. 70D

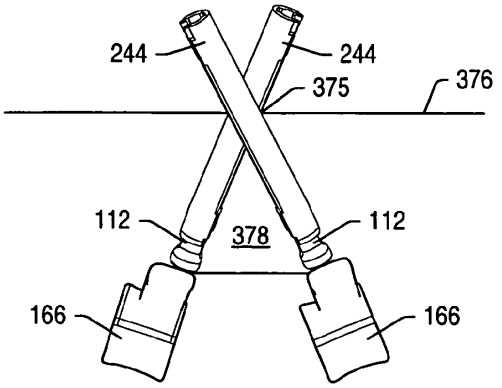

FIG. 71

FIG. 72

FIG. 73

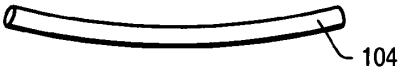

FIG. 74

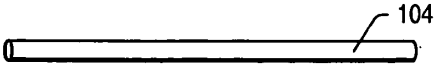

FIG. 75

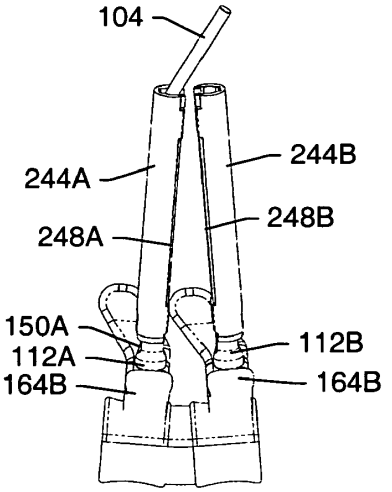

FIG. 76A

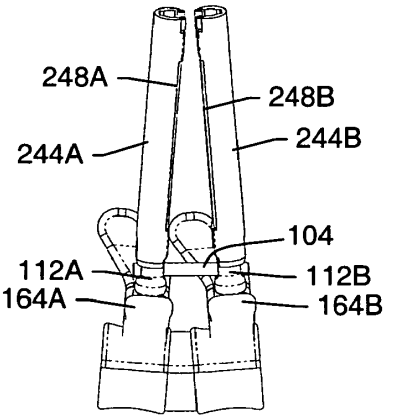

FIG. 76C

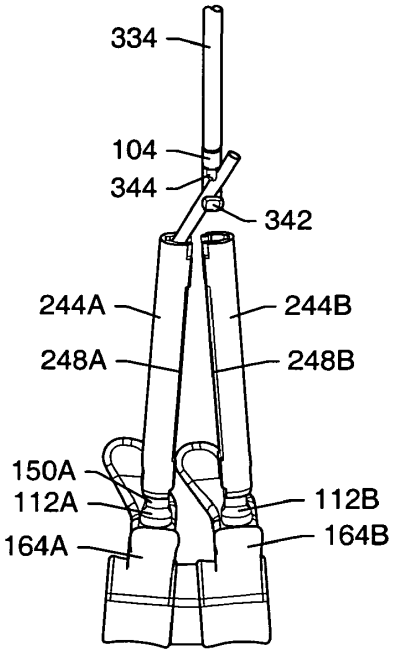

FIG. 76B

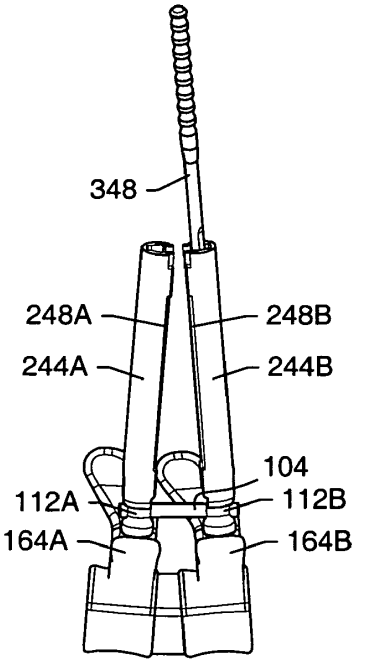

FIG. 76D

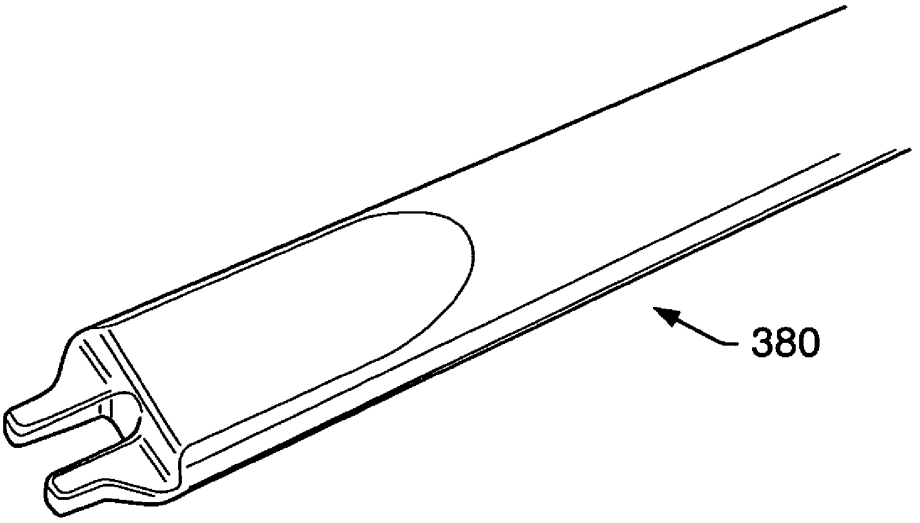

FIG. 77

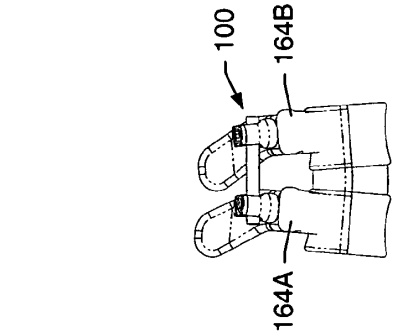

FIG. 78D

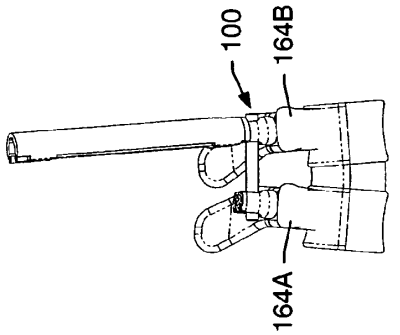

FIG. 78C

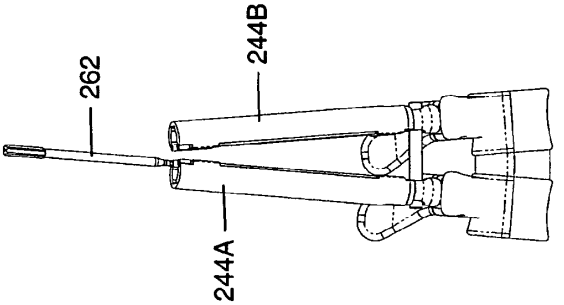

FIG. 78B

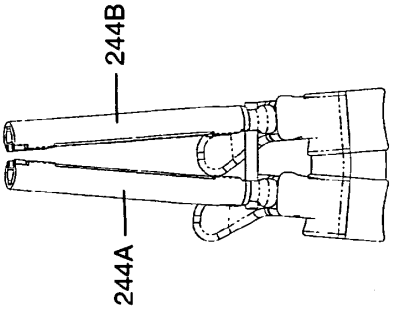

FIG. 78A

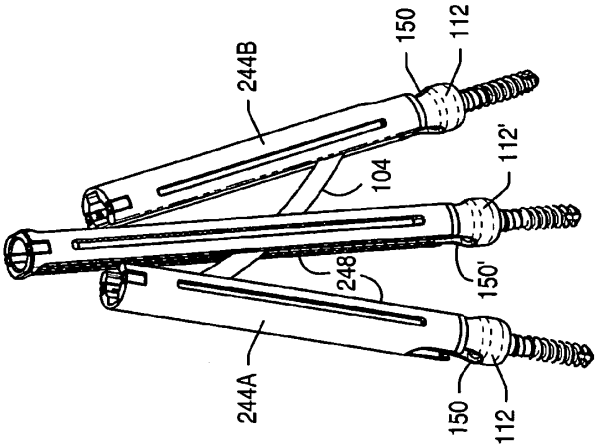

FIG. 79C

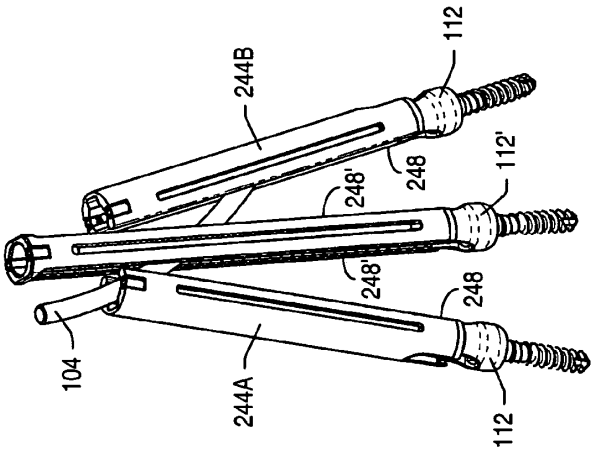

FIG. 79B

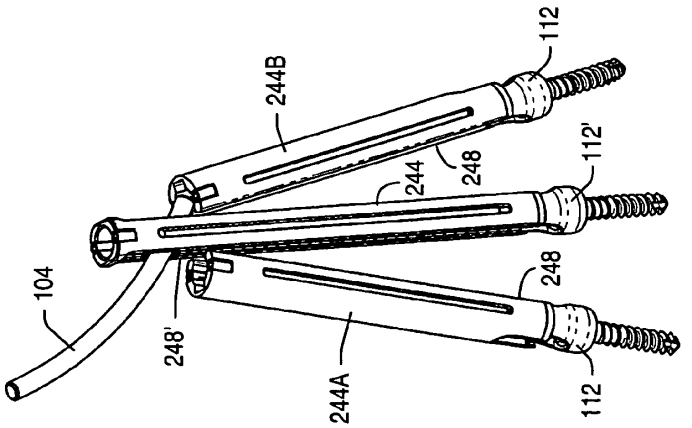

FIG. 79A

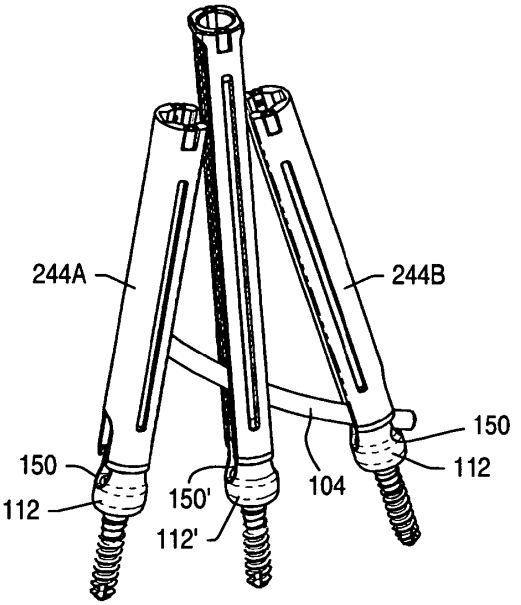

FIG. 79D

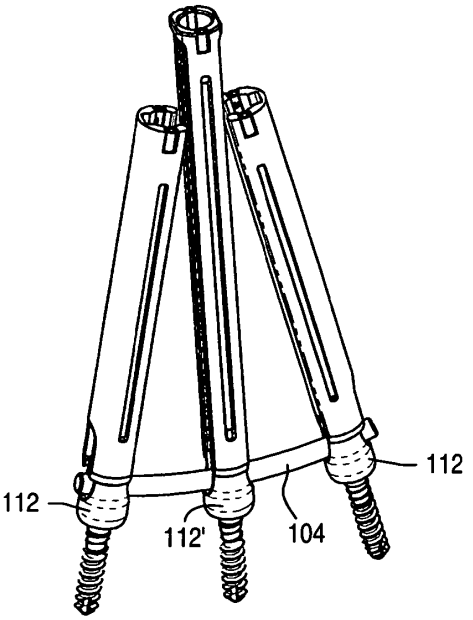

FIG. 79E

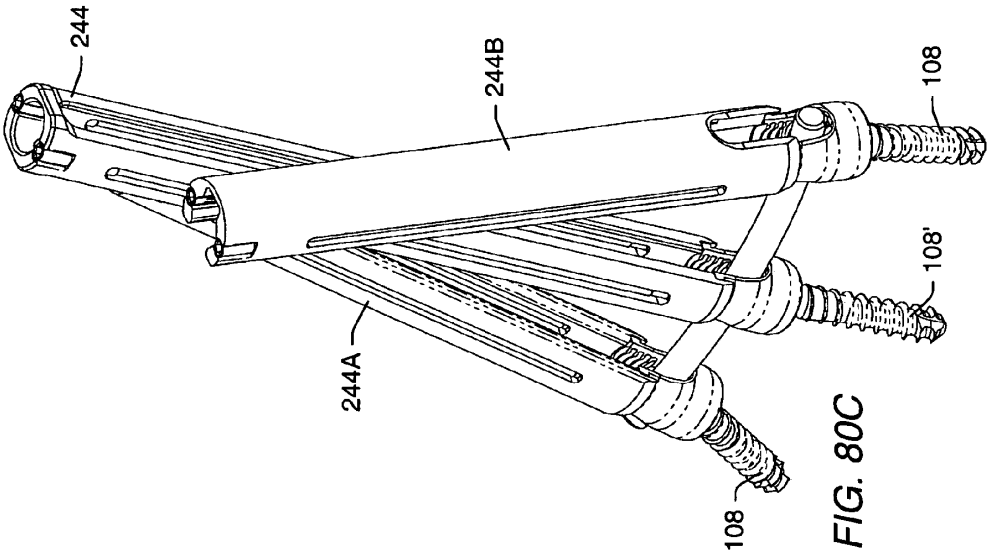

FIG. 80C

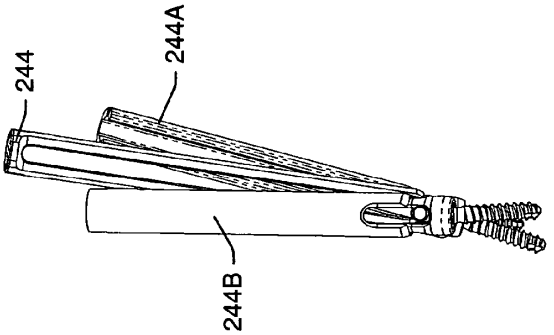

FIG. 80B

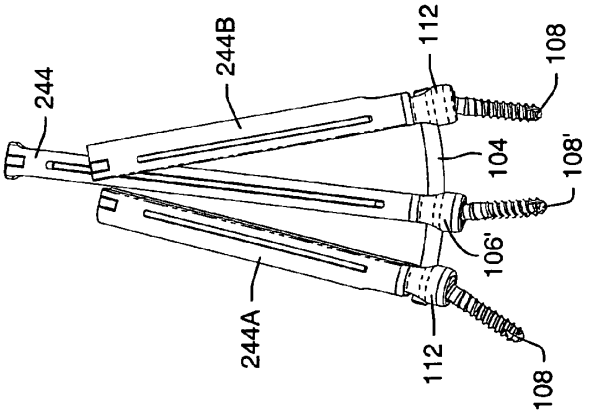

FIG. 80A

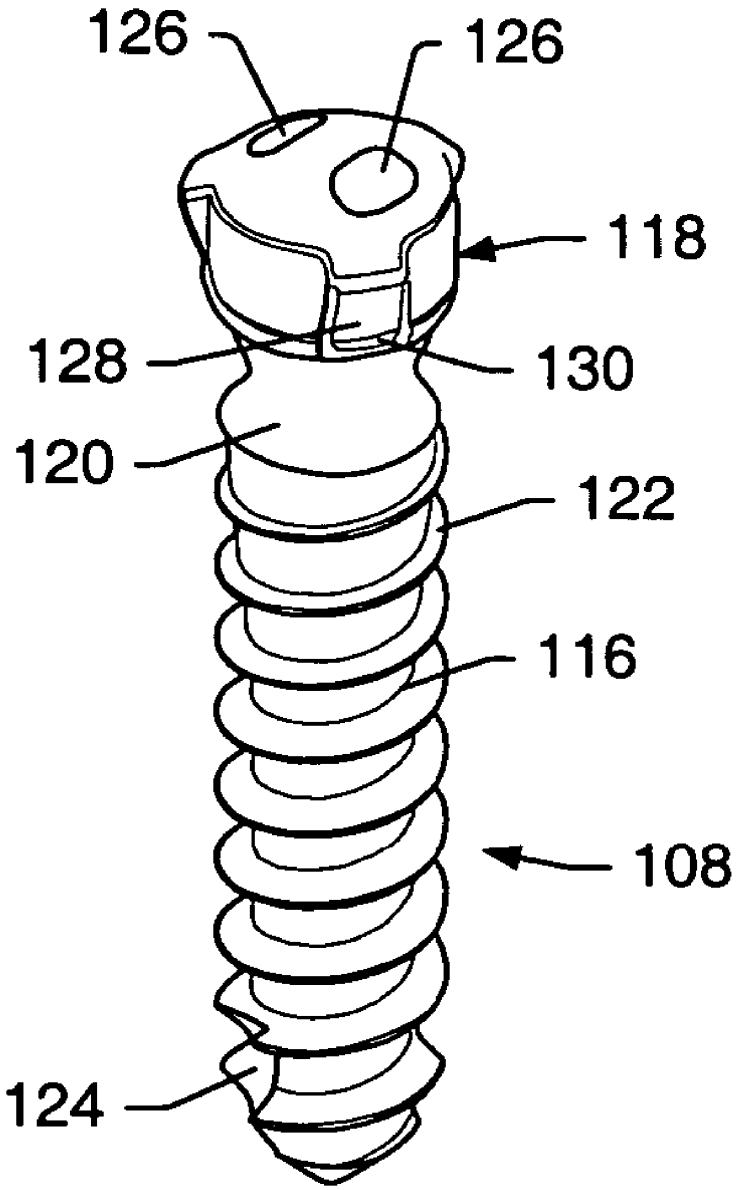

FIG. 81

SPINAL STABILIZATION SYSTEMS AND METHODS

PRIORITY CLAIM

This application claims priority to U.S. Provisional Application No. 60/422,455 entitled "Spinal Stabilization System Using Polyaxial Members" filed Oct. 30, 2002; U.S. Provisional Application No. 60/466,091 entitled "Spinal Stabilization Systems and Methods Using Minimally Invasive Surgical Procedures" filed Apr. 28, 2003; and U.S. Provisional Application No. 60/471,254 entitled "Spinal Stabilization Systems and Methods Using Minimally Invasive Surgical Procedures" filed May 16, 2003. The above-referenced provisional applications are incorporated by reference as if fully set forth herein.

BACKGROUND

1. Field of the Invention

The present invention generally relates to spinal stabilization systems that include at least one polyaxial fastener. Embodiments of the invention relate to spinal stabilization systems that may be inserted into a patient during a minimally invasive surgical procedure. Embodiments of the invention relate to tools used during a minimally invasive surgical procedure. Embodiments of the invention relate to methods of forming implant system components, methods of forming stabilization systems and components, and methods for performing minimally invasive spinal stabilization procedures.

2. Description of Related Art

Bone may be subject to degeneration caused by trauma, disease, and/or aging. Degeneration may destabilize bone and affect surrounding structures. For example, destabilization of a spine may result in alteration of a natural spacing between adjacent vertebrae. Alteration of a natural spacing between adjacent vertebrae may subject nerves that pass between vertebral bodies to pressure. Pressure applied to the nerves may cause pain and/or nerve damage. Maintaining the natural spacing between vertebrae may reduce pressure applied to nerves that pass between vertebral bodies. A spinal stabilization procedure may be used to maintain the natural spacing between vertebrae and promote spinal stability.

Spinal stabilization may involve accessing a portion of the spine through soft tissue. Conventional stabilization systems may require a large incision and/or multiple incisions in the soft tissue to provide access to a portion of the spine to be stabilized. Conventional procedures may result in trauma to the soft tissue, for example, due to muscle stripping.

Spinal stabilization systems for a lumbar region of the spine may be inserted during a spinal stabilization procedure using a posterior spinal approach. Conventional systems and methods for posterolateral spinal fusion may involve dissecting and retracting soft tissue proximate the surgical site. Dissection and retraction of soft tissue may cause trauma to the soft tissue, and extend recovery time. Minimally invasive procedures and systems may reduce recovery time as well as trauma to the soft tissue surrounding a stabilization site.

U.S. Pat. No. 6,530,929 to Justis et al. (hereinafter "Justis"), which is incorporated by reference as if fully disclosed herein, describes minimally invasive techniques and instruments for stabilizing a bony structure in an animal subject. Justis provides a method for using an instrument to connect at least two bone anchors with a connecting element. The instrument is secured to the anchors and manipulated to place the connecting element in a position more proximate the anchors.

SUMMARY

A spinal stabilization system may be installed in a patient to stabilize a portion of a spine. A spinal stabilization system may be installed using a minimally invasive procedure. An instrumentation kit may provide instruments and spinal stabilization system components necessary for forming a spinal stabilization system in a patient.

A spinal stabilization system may be used to achieve rigid pedicle fixation while minimizing the amount of damage to surrounding tissue. In some embodiments, a spinal stabilization system may be used to provide stability to two or more vertebrae. A spinal stabilization system may include an elongated member, two or more bone fastener assemblies, and/or a closure member. The bone fastener assembly may include, but is not limited to, a bone fastener and a collar. A first portion of the bone fastener may couple to a portion of the spine during use. A first portion of a collar may couple to a second portion of the bone fastener. A second portion of the collar may couple to an elongated member during use. In some embodiments, an orientation of the bone fastener may be independent of the orientation of the collar for a bone fastener assembly. After the bone fastener is placed in a vertebral body, the collar coupled to the bone fastener may be positioned so that the elongated member can be positioned in the collar and in at least one other collar that is coupled to another vertebral body by a bone fastener.

In an embodiment, a bone fastener assembly may include a bone fastener, a ring, and a collar. The ring may be positioned in the collar. Removal of the ring from the collar may be inhibited. A bone fastener may be positioned in the ring through a lower opening in the ring and in the collar. Splines of the bone fastener may be aligned with seats in the ring. The splines may be forced into the seats to couple the ring to the bone fastener. Separation of the ring from the bone fastener may be inhibited after the bone fastener is forced into the seats. The ring may angulate within the collar (i.e., the bone fastener may move relative to the collar within a defined range of motion).

In an embodiment, a collar may include, but is not limited to, arms and a body. Arms and body of a collar may form a slot to receive an elongated member. When the elongated member is positioned in the collar, a portion of the elongated member may be coupled to a head of a bone fastener of the bone fastener assembly.

Inner surfaces of the arms of a bone fastener assembly collar may include a modified thread. The modified thread may engage a complementary modified thread of a closure member. A closure member may secure an elongated member to a bone fastener assembly. In some embodiments, a range of motion of a collar relative to a bone fastener may be skewed from a conical range of motion relative to a longitudinal center axis of the collar. The skew may be used to accommodate lordotic alignment and/or pedicle angle shift in adjacent vertebrae.

Different instruments may be used to form a spinal stabilization system in a patient using a minimally invasive procedure. The instruments may include, but are not limited to, positioning needles, guide wires, sleeves, bone fastener driver, mallets, tissue wedges, tissue retractors, tissue dilators, bone awls, taps, and an elongated member length estimator. An instrumentation kit may include, but is not limited to, two or more detachable members (e.g., sleeves),

a tissue wedge, an elongated member positioner, a counter torque wrench, an estimating tool, a seater, closure member driver, and/or combinations thereof.

Detachable members may be used during installation of one vertebral level stabilization systems at each of the two vertebrae to be stabilized. In an embodiment, a detachable member may be coupled to a collar of a bone fastener assembly. A detachable member may include channels to allow movable members to advance and/or retract relative to the detachable member. In certain embodiments, movable members may be positioned through other portions of a detachable member. Movable members may couple to a bone fastener assembly collar. The movable members may inhibit translational and/or rotational movement of the collar relative to the detachable member.

An estimating tool may be used prior to insertion of an elongated member into bone fastener assemblies to estimate a desired length of the elongated member. The estimating tool may include arms. The arms may be positioned down detachable members to rest on top of collars or bone fasteners of bone fastener assemblies that are coupled to vertebral bodies. The arms of the estimating tool may be expanded to contact inner surfaces of the detachable members. When the ends of the arms contact the inner surfaces of the detachable members at the bone fastener assemblies, the estimating tool may be withdrawn from the detachable members. The arms may compress during removal, but will spring back to the measured distance between the detachable members adjacent the collar. The distance between the arms may be measured using a scale to provide an estimate of the appropriate elongated member length. Some additional length may be added to the estimated value to account for contouring of the elongated member and/or to allow the elongated member to extend beyond an end of at least two collars.

A tissue wedge may be used to form a plane between a first vertebra and a second vertebra during a minimally invasive procedure. The plane may accept an elongated member. In an embodiment, a tissue wedge may include a handle portion and a blunted blade. In some embodiments, the blade may be a double-wedged blade. One edge of the blade may include a hooked portion. The hooked portion may include a cutting edge for severing fascia. The hooked portion may cut fascia positioned in the hooked portion when the tissue wedge is drawn upwards.

In some embodiments, an elongated member positioner may be used to guide an elongated member through detachable members and position the elongated member in collars proximate pedicles of vertebrae. In an embodiment, an elongated member positioner may include a body and a plunger. The body may include a passageway, a handle portion, and an engaging portion. The plunger may contact the elongated member in the engaging portion. In some cases, pressure supplied to an elongated member with an elongated member positioner may not be sufficient to seat the elongated member in collars of bone fastener assemblies. When the elongated member positioner cannot place the elongated member in the collars, a seater may be used to place the elongated member in the collars. The seater may include a handle portion. A grooved portion of the seater may be used to push the elongated member downwards into the collars.

In an embodiment, a closure member driver may position a closure member in a collar coupled to a bone fastener. The closure member driver may include a handle, an elongated portion, and a coupling portion.

In certain embodiments, a detachable member may be held with a counter torque wrench to inhibit injury to the patient as the tool portion of a secured closure member is sheared off. In some embodiments, a counter torque wrench may include a handle portion and a sleeve portion. A distal end of the sleeve portion may engage an elongated member.

In an embodiment, a method for inserting a stabilization system in a spine may involve determining one or more vertebrae of the spine to be targeted for stabilization, making an incision in the skin, inserting a spinal stabilization system, and closing the incision in the skin.

During some surgical procedures, images of a patient may be taken to assist in determining target locations for insertion of bone fastener assemblies in vertebrae to be stabilized. A marking or markings may be made on the patient to indicate the target locations. An incision may be made in the patient's skin between the target locations. In some embodiments, the incision may be enlarged after insertion of a first bone fastener assembly. The targeting needle may be inserted into a first pedicle. Imaging may be used to monitor orientation and depth of the targeting needle during insertion.

After insertion of the targeting needle, a guide wire may be inserted through a hollow shaft of the targeting needle into the first pedicle. The targeting needle may be removed from the patient. A first bone fastener assembly coupled to a first detachable member may be inserted into the first pedicle.

A plane may be created in soft tissue between the first bone fastener assembly and a second pedicle. The plane may be formed without severing muscle tissue. If needed, fascia may be cut to facilitate formation of the plane. After the plane is formed, the targeting needle may be inserted in the first detachable member. A distal end of the targeting needle may be wanded through the plane and placed at an entry point of the second pedicle. The targeting needle may be inserted into the second pedicle in a desired orientation and to a desired depth. A guide wire may be inserted through a hollow shaft of the targeting needle into the second pedicle. The targeting needle may be removed, and a second bone fastener assembly coupled to a second detachable member may be inserted into the second pedicle.

An elongated member may be guided down the detachable members. The elongated member may be seated in the collars. A position of the elongated member in the collars may be confirmed using fluoroscopic imaging. After confirming the position of the elongated member, a first closure member coupled to a driver may be advanced down the first detachable members. The first closure member may be coupled to the first collar. A counter torque wrench may be coupled to the detachable member. A head of the first closure member may be sheared. When the head is sheared, enough force is applied to the elongated member by the closure member to inhibit movement of the elongated member relative to the bone fastener assembly. The driver may be removed from the first closure member after coupling the first closure member to the first collar. The sheared off head may be removed from the driver.

The driver may be coupled to a second closure member. A second closure member coupled to the driver and a counter torque wrench may be used while the head of the closure member is sheared off to form the spinal stabilization system. The detachable members may be removed from the collars. The incision in the skin may be closed.

BRIEF DESCRIPTION OF THE DRAWINGS

Advantages of the present invention will become apparent to those skilled in the art with the benefit of the following detailed description and upon reference to the accompanying drawings in which:

FIG. **1** depicts a perspective view of an embodiment of a spinal stabilization system.

FIG. **2** depicts a perspective view of an embodiment of a bone fastener assembly.

FIG. **3** depicts a perspective view of an embodiment of a bone fastener.

FIGS. **4**A and **4**B depict perspective views of embodiments of bone fastener assembly rings.

FIG. **5** depicts a perspective view of an embodiment of a bone fastener assembly collar.

FIG. **6** depicts a cross-sectional view of an embodiment of a bone fastener assembly.

FIG. **7** depicts a perspective view of an embodiment of a bone fastener assembly.

FIGS. **8**A-**8**C depict schematic views of a method of positioning a ring in a collar of a bone fastener assembly.

FIGS. **9**A-**9**C depict schematic views of a method of positioning a ring in a collar of a bone fastener assembly.

FIGS. **10**A and **10**B depict schematic views of positioning a bone fastener in a ring and collar to form a bone fastener assembly.

FIG. **11** depicts a front view of an embodiment of a bone fastener assembly with a collar that allows for angulation of a bone fastener relative to the collar in a conical range of motion that is symmetrical relative to an axis that passes through a central axis of the collar and a central axis of a bone fastener.

FIG. **12**A depicts a front view of an embodiment of a bone fastener assembly with a collar that allows for angulation of a bone fastener relative to the collar in a conical range of motion that is not symmetrical relative to an axis that passes through a central axis of the collar and a central axis of a bone fastener. The collar allows additional lateral bias relative to a non-biased collar.

FIG. **12**B depicts a side view of an embodiment of a bone fastener assembly with a collar that allows for angulation of a bone fastener relative to the collar in a conical range of motion that is not symmetrical relative to an axis that passes through a central axis of the collar and a central axis of a bone fastener. The collar allows additional caudal or cephalid bias relative to a non-biased collar.

FIG. **13**A depicts a schematic side view representation of embodiments of bone fastener assemblies positioned in vertebrae.

FIG. **13**B depicts a schematic top view representation of an embodiment of a single-level spinal stabilization system.

FIG. **14** depicts a perspective view of an embodiment of a closure member.

FIG. **15** depicts a cross-sectional representation of the closure member taken substantially along plane **15-15** indicated in FIG. **14**.

FIG. **16** depicts a perspective view of an embodiment of a portion of a spinal stabilization system.

FIG. **17**A depicts a cross-sectional representation of an embodiment of a spinal stabilization system.

FIG. **17**B depicts a detailed view of a portion of FIG. **17**A.

FIG. **18**A depicts a cross-sectional representation of an embodiment of a spinal stabilization system.

FIG. **18**B depicts a detailed view of a portion of FIG. **18**A.

FIG. **19** depicts a perspective view of an embodiment of a targeting needle.

FIG. **20** depicts a perspective view of an outer housing of a targeting needle.

FIG. **21** depicts a perspective view of an embodiment of a member of a targeting needle.

FIG. **22** depicts a perspective view of an embodiment of a guide wire.

FIG. **23** depicts a perspective view of an embodiment of a guide wire.

FIG. **24** depicts a perspective view of an embodiment of a bone awl.

FIG. **25** depicts a perspective view of an embodiment of a bone tap.

FIG. **26** depicts a perspective view of an embodiment of a multi-channel sleeve.

FIG. **27** depicts a top view of an embodiment of a multi-channel sleeve with a bone fastener assembly coupled to the sleeve.

FIG. **28** depicts a cross-sectional representation of a portion of the sleeve with the bone fastener assembly taken substantially along line **28-28** of FIG. **27**.

FIG. **29** depicts a cross-sectional representation of a portion of the sleeve with the bone fastener assembly taken substantially along line **29-29** of FIG. **27**.

FIG. **30** depicts a perspective view of an embodiment of a single-channel sleeve.

FIG. **31** depicts a perspective view of an embodiment of a sleeve during connection of the sleeve to a collar of a bone fastener assembly.

FIG. **31**A depicts a detailed view of a portion of FIG. **31**.

FIG. **32** depicts a partial cross-sectional representation of an embodiment of a sleeve coupled to a collar of a bone fastener assembly.

FIG. **33** depicts a partial cross-sectional representation of an embodiment of a sleeve coupled to a collar of a bone fastener assembly.

FIG. **34** depicts a partial cross-sectional representation of an embodiment of a sleeve coupled to a collar of a bone fastener assembly.

FIG. **35** depicts a partial cross-sectional representation of an embodiment of a sleeve coupled to a collar of a bone fastener assembly.

FIG. **36** depicts top view representation of an embodiment of a collar.

FIG. **37** depicts a partial cross-sectional representation of an embodiment of a sleeve coupled to an embodiment of a collar of a bone fastener assembly, such as the collar depicted in FIG. **36**.

FIG. **38** depicts a top view representation of an embodiment of a collar.

FIG. **39** depicts a partial cross-sectional representation of an embodiment of a sleeve coupled to an embodiment of a collar of a bone fastener assembly, such as the collar depicted in FIG. **38**.

FIG. **40** depicts a partial cross-sectional view of an embodiment of a sleeve with an inner sleeve.

FIG. **41** depicts a partial cross-sectional representation of an embodiment of a sleeve coupled to a collar of a bone fastener assembly.

FIG. **42** depicts a partial cross-sectional representation of an embodiment of a sleeve coupled to a collar of a bone fastener assembly.

FIG. **43** depicts a partial cross-sectional representation of an embodiment of a sleeve coupled to a collar of a bone fastener assembly.

FIG. **44** depicts a cross-sectional representation of an embodiment of a hinged sleeve coupled to a collar of a bone fastener assembly.

FIG. **45** depicts a cross-sectional representation of an embodiment of a hinged sleeve coupled to a collar of a bone fastener assembly.

FIG. **46** depicts a schematic representation of sleeve embodiments coupled to collars of a spinal stabilization system.

FIG. **47** depicts a schematic representation of sleeve embodiments with connections that allow relative movement of portions of a sleeve.

FIG. **48** depicts a perspective view of an embodiment of sleeves coupled to bone fastener assemblies.

FIG. **49** depicts a perspective view of an embodiment of sleeves that are coupled to bone fastener assemblies.

FIG. **50** depicts a schematic view of sleeve embodiments that are coupled to an embodiment of a frame.

FIG. **51** depicts a perspective view of an embodiment of a driver coupled to a bone fastener and a sleeve.

FIG. **52** depicts a partial cross-sectional view of an embodiment of a bone fastener and collar coupled to a driver positioned in a dilator.

FIG. **53** depicts a perspective view of an embodiment of a tissue wedge.

FIG. **54** depicts a perspective view of an embodiment of an estimating tool.

FIG. **55** depicts a perspective view of an embodiment of an estimating tool.

FIG. **56** depicts a perspective view of an embodiment of an estimating tool.

FIG. **57** depicts a perspective view of a tool designed to position an elongated member proximate vertebrae.

FIG. **58** depicts a perspective view of a seater for placing an elongated member proximate vertebrae.

FIGS. **59**A and **59**B depict perspective views of a tool designed to position a closure member in a collar coupled to a bone fastener.

FIGS. **60**A and **60**B depict perspective views of a tool designed to position a closure member in a collar coupled to a bone fastener.

FIG. **61** depicts an embodiment of a counter torque wrench coupled to a sleeve.

FIG. **62** depicts an embodiment of a counter torque wrench.

FIG. **63** depicts a schematic view of the counter torque wrench shown in FIG. **62** coupled to an elongated member.

FIGS. **64**A-**64**E depict schematic views of guide wire placement during a minimally invasive spinal stabilization procedure.

FIGS. **65**A-**65**D depict schematic views of tissue dilation during a minimally invasive spinal stabilization procedure.

FIGS. **66**A-**66**F depict schematic views of vertebra preparation for receiving a bone fastener assembly during a minimally invasive spinal stabilization procedure.

FIGS. **67**A-**67**D depict schematic views of insertion of a sleeve and bone fastener assembly during a minimally invasive spinal stabilization procedure.

FIGS. **68**A-**68**D depict schematic views of tissue plane creation during a minimally invasive spinal stabilization procedure.

FIG. **69** depicts an embodiment of a tissue wedge.

FIGS. **70**A-**70**D depict schematic views of placement of a sleeve and a bone fastener assembly in second vertebra during a minimally invasive spinal stabilization procedure.

FIG. **71** depicts a tissue plane between adjacent vertebrae with anchored sleeves crossing at the surface of the skin.

FIG. **72** depicts an embodiment of an elongated member.

FIG. **73** depicts an embodiment of an elongated member.

FIG. **74** depicts an embodiment of an elongated member.

FIG. **75** depicts an embodiment of an elongated member.

FIGS. **76**A-**76**D depict schematic views of elongated member placement during a minimally invasive spinal stabilization.

FIG. **77** depicts a perspective view of a distal portion of a two-pronged driver.

FIGS. **78**A-**78**D depict schematic views of a sleeve removal during a minimally invasive spinal stabilization procedure.

FIGS. **79**A-**79**E depict schematic views of elongated member placement in sleeves for a multi-level spinal stabilization system.

FIGS. **80**A-**80**C depict schematic views of bone fastener assemblies coupled to sleeves.

FIG. **81** depicts a perspective view of a bone fastener used in an invasive procedure.

While the invention is susceptible to various modifications and alternative forms, specific embodiments thereof are shown by way of example in the drawings and will herein be described in detail. The drawings may not be to scale. It should be understood that the drawings and detailed description thereto are not intended to limit the invention to the particular form disclosed, but on the contrary, the intention is to cover all modifications, equivalents, and alternatives falling within the spirit and scope of the present invention as defined by the appended claims.

DETAILED DESCRIPTION

A spinal stabilization system may be installed in a patient to stabilize a portion of a spine. Spinal stabilization may be used, but is not limited to use, in patients having degenerative disc disease, spinal stenosis, spondylolisthesis, pseudoarthrosis, and/or spinal deformities; in patients having fracture or other vertebral trauma; and in patients after tumor resection. A spinal stabilization system may be installed using a minimally invasive procedure. An instrumentation set may include instruments and spinal stabilization system components for forming a spinal stabilization system in a patient.

A minimally invasive procedure may be used to limit an amount of trauma to soft tissue surrounding vertebrae that are to be stabilized. In some embodiments, the natural flexibility of skin and soft tissue may be used to limit the length and/or depth of an incision or incisions needed during the stabilization procedure. Minimally invasive procedures may provide limited direct visibility in vivo. Forming a spinal stabilization system using a minimally invasive procedure may include using tools to position system components in the body.

A minimally invasive procedure may be performed after installation of one or more spinal implants in a patient. The spinal implant or spinal implants may be inserted using an anterior procedure and/or a lateral procedure. The patient may be turned and a minimally invasive procedure may be used to install a posterior spinal stabilization system. A minimally invasive procedure for stabilizing the spine may be performed without prior insertion of one or more spinal implants in some patients. In some patients, a minimally invasive procedure may be used to install a spinal stabilization system after one or more spinal implants are inserted using a posterior spinal approach.

A spinal stabilization system may be used to achieve rigid pedicle fixation while minimizing the amount of damage to surrounding tissue. In some embodiments, a spinal stabilization system may be used to provide stability to two adjacent vertebrae (i.e., one vertebral level). A spinal stabi-

lization system may include two bone fastener assemblies. One bone fastener assembly may be positioned in each of the vertebrae to be stabilized. An elongated member may be coupled and secured to the bone fastener assemblies. As used herein, "coupled" components may directly contact each other or may be separated by one or more intervening members. In some embodiments, a single spinal stabilization system may be installed in a patient. Such a system may be referred to as a unilateral, single-level stabilization system or a single-level, two-point stabilization system. In some embodiments, two spinal stabilization systems may be installed in a patient on opposite sides of a spine. Such a system may be referred to as a bilateral, single-level stabilization system or a single-level, four-point stabilization system.

In some embodiments, a spinal stabilization system may provide stability to three or more vertebrae (i.e., two or more vertebral levels). In a two vertebral level spinal stabilization system, the spinal stabilization system may include three bone fastener assemblies. One bone fastener assembly may be positioned in each of the vertebrae to be stabilized. An elongated member may be coupled and secured to the three bone fastener assemblies. In some embodiments, a single two-level spinal stabilization system may be installed in a patient. Such a system may be referred to as a unilateral, two-level stabilization system or a two-level, three-point stabilization system. In some embodiments, two three-point spinal stabilization systems may be installed in a patient on opposite sides of a spine. Such a system may be referred to as a bilateral, two-level stabilization system or a two-level, six-point stabilization system.

In some embodiments, combination systems may be installed. For example, a two-point stabilization system may be installed on one side of a spine, and a three-point stabilization system may be installed on the opposite side of the spine. The composite system may be referred to a five-point stabilization system.

Minimally invasive procedures may reduce trauma to soft tissue surrounding vertebrae that are to be stabilized. Only a small opening may need to be made in a patient. For example, for a single-level stabilization procedure on one side of the spine, the surgical procedure may be performed through a 2 cm to 4 cm incision formed in the skin of the patient. In some embodiments, the incision may be above and substantially between the vertebrae to be stabilized. In some embodiments, the incision may be above and between the vertebrae to be stabilized. In some embodiments, the incision may be above and substantially halfway between the vertebrae to be stabilized. Dilators, a targeting needle, and/or a tissue wedge may be used to provide access to the vertebrae to be stabilized without the need to form an incision with a scalpel through muscle and other tissue between the vertebrae to be stabilized. A minimally invasive procedure may reduce an amount of post-operative pain felt by a patient as compared to invasive spinal stabilization procedures. A minimally invasive procedure may reduce recovery time for the patient as compared to invasive spinal procedures.

Components of spinal stabilization systems may be made of materials including, but not limited to, titanium, titanium alloys, stainless steel, ceramics, and/or polymers. Some components of a spinal stabilization system may be autoclaved and/or chemically sterilized. Components that may not be autoclaved and/or chemically sterilized may be made of sterile materials. Components made of sterile materials may be placed in working relation to other sterile components during assembly of a spinal stabilization system.

Spinal stabilization systems may be used to correct problems in lumbar, thoracic, and/or cervical portions of a spine. Various embodiments of a spinal stabilization system may be used from the C1 vertebra to the sacrum. For example, a spinal stabilization system may be implanted posterior to the spine to maintain distraction between adjacent vertebral bodies in a lumbar portion of the spine.

FIG. **1** depicts an embodiment of spinal stabilization system **100** that may be implanted using a minimally invasive surgical procedure. Spinal stabilization system **100** may include bone fastener assemblies **102**, elongated member **104**, and/or closure members **106**. Other spinal stabilization system embodiments may include, but are not limited to, plates, dumbbell-shaped members, and/or transverse connectors. FIG. **1** depicts a spinal stabilization system for one vertebral level. In some embodiments, the spinal stabilization system of FIG. **1** may be used as a multi-level spinal stabilization system if one or more vertebrae are located between the vertebrae in which bone fastener assemblies **102** are placed. In other embodiments, multi-level spinal stabilization systems may include additional bone fastener assemblies to couple to one or more other vertebrae.

FIG. **2** depicts a perspective view of bone fastener assembly **102**. FIG. **3**, FIGS. **4**A and **4**B, and FIG. **5** depict embodiments of bone fastener assembly components. Components of bone fastener assembly **102** may include, but are not limited to, bone fastener **108** (shown in FIG. **3**), ring **110** (shown in FIGS. **4**A and **4**B), and collar **112** (shown in FIG. **5**). Bone fastener **108** may couple bone fastener assembly **102** to a vertebra. Ring **110** may be positioned between a head of bone fastener **108** and collar **112**.

FIG. **6** depicts a cross-sectional representation of bone fastener **108**, ring **110**, and collar **112** of bone fastener assembly **102**. Bone fastener **108** of bone fastener assembly **102** may include passage **114**. Bone fastener **108** may be cannulated (i.e., passage **114** may run through the full length of the bone fastener). A guide wire may be placed through passage **114** so that bone fastener **108** may be inserted into a vertebra at a desired location and in a desired angular orientation relative to the vertebra with limited or no visibility of the vertebra

In some embodiments, a bone fastener assembly may be a fixed angle fastener. FIG. **7** depicts an embodiment of a fixed angle bone fastener. Collar and bone fastener may be formed as a unitary piece of metal. A fixed angle fastener may be positioned as the first bone fastener assembly inserted into a vertebra.

A bone fastener may be, but is not limited to, a bone screw, a ring shank fastener, a barb, a nail, a brad, or a trocar. Bone fasteners and/or bone fastener assemblies may be provided in various lengths in an instrumentation set to accommodate variability in vertebral bodies. For example, an instrumentation set for stabilizing vertebrae in a lumbar region of the spine may include bone fastener assemblies with lengths ranging from about 30 mm to about 75 mm in 5 mm increments. A bone fastener assembly may be stamped with indicia (i.e., printing on a side of the collar). In some embodiments, a bone fastener assembly or a bone fastener may be color-coded to indicate a length of the bone fastener. In certain embodiments, a bone fastener with a 30 mm thread length may have a magenta color, a bone fastener with a 35 mm thread length may have an orange color, and a bone fastener with a 55 mm thread length may have a blue color. Other colors may be used as desired.

Each bone fastener provided in an instrumentation set may have substantially the same thread profile and thread pitch. In an embodiment, the thread may have about a 4 mm

major diameter and about a 2.5 mm minor diameter with a cancellous thread profile. In certain embodiments, the minor diameter of the thread may be in a range from about 1.5 mm to about 4 mm or larger. In certain embodiments, the major diameter of the thread may be in a range from about 3.5 mm to about 6.5 mm or larger. Bone fasteners with other thread dimensions and/or thread profiles may also be used. A thread profile of the bone fasteners may allow bone purchase to be maximized when the bone fastener is positioned in vertebral bone.

FIG. **3** depicts an embodiment of bone fastener **108**. Bone fastener **108** may include shank **116**, head **118**, and neck **120**. Shank **116** may include threading **122**. In some embodiments, threading **122** may include self-tapping start **124**. Self-tapping start **124** may facilitate insertion of bone fastener **108** into vertebral bone.

Head **118** of bone fastener **108** may include various configurations to engage a driver that inserts the bone fastener into a vertebra. In some embodiments, the driver may also be used to remove an installed bone fastener from a vertebra. In some embodiments, head **118** may include one or more tool portions **126**. Tool portions **126** may be recesses and/or protrusions designed to engage a portion of the driver. In some embodiments, bone fastener **108** may be cannulated for use in a minimally invasive procedure.

Head **118** of bone fastener **108** may include one or more splines **128**, as depicted in FIG. **3**. In some head embodiments, head **118** may include three splines. Splines **128** may be equally spaced circumferentially around head **118** of bone fastener **108**. In some head embodiments, splines **128** may be spaced at unequal distances circumferentially around head **118**. Splines **128** may include various surface configurations and/or texturing to enhance coupling of bone fastener **108** with a ring of a bone fastener assembly. In some embodiments, sides of the splines may be tapered so that the splines form a dovetail connection with a ring. In some embodiments, spline width may be tapered so that a good interference connection is established when the bone screw is coupled to a ring. Splines **128** may include one or more projections **130** to facilitate coupling bone fastener **108** with an inner surface of a ring. In some embodiments, projections **130** may be positioned on a lower portion of splines **128**. In some embodiments, the splines may include recessed surfaces that accept projections extending from surfaces of the ring.

Neck **120** of bone fastener **108** may have a smaller diameter than adjacent portions of head **118** and shank **116**. The diameter of neck **120** may fix the maximum angle that the collar of the bone fastener assembly can be rotated relative to bone fastener **108**. In some embodiments, neck **120** may be sized to allow up to about 40° or more of angulation of the collar relative to the bone fastener. In some embodiments, the neck may be sized to allow up to about 30° of angulation of the collar relative to the bone fastener. In some embodiments, the neck may be sized to allow up to about 20° of angulation of the collar relative to the bone fastener.

FIGS. **4**A and **4**B depict perspective views of embodiments of ring **110**. Outer surface **132** of ring **110** may have a contour that substantially complements a contour of an inner surface of a collar in which the ring resides. A contour of the outer surface of the ring may be a spherical portion. When the ring is positioned in the collar, the complementary shape of the ring outer surface and the inner surface of the collar that contacts the ring allows angulation of the collar relative to a bone fastener coupled to the ring. The contour of the outer surface of the ring and the inner surface of the collar may inhibit removal of the ring from the collar after insertion of the ring into the collar.

Outer surface **132** of ring **110** may have a smooth finish. In some embodiments, outer surface **132** may be surface treated or include coatings and/or coverings. Surface treatments, coatings, and/or coverings may be used to adjust frictional and/or wear properties of the outer surface of the ring. In some embodiments, a portion of the outer surface of the ring may be shaped and/or textured to limit a range of motion of the collar relative to a bone fastener of a bone fastener assembly.

An inner surface of ring **110** may include one or more grooves **134** and/or one or more seats **136**. Seats **136** may be circumferentially offset from grooves **134**. Grooves **134** may be sized to allow passage of splines of a bone fastener (e.g., splines **128** shown in FIG. **3**) through the ring. When the splines are inserted through grooves **134**, the bone fastener may be rotated until the splines align with seats **136**. The bone fastener may be pulled or driven so that the splines are positioned in seats **136**. In some embodiments, projections (e.g., projections **130** in FIG. **3**) may pass over ridges **138** of ring **110**. Passage of the projections over ridges **138** may securely couple the bone fastener to the ring and inhibit separation of the ring from the bone fastener.

In a ring embodiment, a number of grooves **134** and a number of seats **136** may equal a number of splines **128** on a head of a bone fastener. Seats **136** and grooves **134** may be equally spaced circumferentially around the inner surface of ring **110**. In some embodiments, seats **136** may be circumferentially offset about 60° from grooves **134**.

In some embodiments, as shown in FIG. **4**A, a ring may be a complete ring without a split or slots. In some embodiments, a ring may include a split or slots to facilitate insertion of the ring into a collar. FIG. **4**B depicts a ring with a split. In some embodiments, a ring with a split and/or slots may be compressed to ease insertion into a collar. Once positioned in the collar, the ring may expand to its original uncompressed dimensions, thus inhibiting removal from the collar.

As used herein, the term "collar" includes any element that wholly or partially encloses or receives one or more other elements. A collar may enclose or receive elements including, but not limited to, a bone fastener, a closure member, a ring, and/or an elongated member. In some embodiments, a collar may couple two or more other elements together (e.g., an elongated member and a bone fastener). A collar may have any of various physical forms. In some embodiments, a collar may have a "U" shape, however it is to be understood that a collar may also have other shapes.

A collar may be open or closed. A collar having a slot and an open top, such as collar **112** shown in FIG. **2** and in FIG. **5**, may be referred to as an "open collar." A bone fastener assembly that includes an open collar may be referred to as an "open fastener." In some embodiments, an elongated member may be top loaded into the open fastener. A closure member may be coupled to the collar to secure the elongated member to the open fastener.

A collar that does not include a slot and an open top may be referred to as a "closed collar." A spinal implant that includes a closed collar may be referred to as a "closed implant." A closed collar may include an aperture, bore, or other feature in side surfaces for accommodating other components of a stabilization system (e.g., an elongated member). A setscrew may be used to securely couple an elongated member to a closed implant.

Collar **112** may include body **140** and arms **142**. Arms **142** may extend from body **140**. Body **140** of collar **112** may be greater in width than a width across arms **142** of collar **112** (i.e., body **140** may have a maximum effective outer diameter greater than a maximum effective outer diameter of arms **142**). A reduced width across arms **142** may allow a detachable member to be coupled to the arms without substantially increasing a maximum effective outer diameter along a length of collar **112**. Thus, a reduced width across arms **142** may reduce bulk at a surgical site.

A height of body **140** may range from about 3 millimeters (mm) to about 7 mm. In an embodiment, a height of body **140** is about 5 mm. Body **140** may include opening **144** in a lower surface of the body. To inhibit passage of a ring from collar **112**, opening **144** may be smaller than an outer diameter of the ring. Inner surface **146** may be machined to complement a portion of an outer surface of a ring that is to be positioned in collar **112**. Machining of inner surface **146** may enhance retention of a ring in collar **112**. Inner surface **146** of body **140** may be complementary in shape to a portion of outer surface **132** of ring **110** (see FIG. **4**) so that the ring is able to swivel in the collar. Inner surfaces and/or outer surfaces of collar **112** may be surface treated or include coatings and/or coverings to modify frictional properties or other properties of the collar.

Inner surfaces of arms **142** may include modified thread **148**. Modified threads **148** may engage complementary modified threads of a closure member to secure an elongated member to a bone fastener assembly. Modified threads **148** may have a constant pitch or a variable pitch.

A height and a width of arms **142** may vary. Arms **142** may range in height from about 8 mm to about 15 mm. In an embodiment, a height of arms **142** is about 11 mm. A width (i.e., effective diameter) of arms **142** may range from about 5 mm to 14 mm. Arms **142** and body **140** may form slot **150**. Slot **150** may be sized to receive an elongated member. Slot **150** may include, but is not limited to, an elongated opening of constant width, an elongated opening of variable width, a rectangular opening, a trapezoidal opening, a circular opening, a square opening, an ovoid opening, an egg-shaped opening, a tapered opening, and combinations and/or portions thereof. In some embodiments, a first portion of slot **150** may have different dimensions than a second portion of slot **150**. In certain embodiments, a portion of slot **150** in first arm **142** may have different dimensions than a portion of slot **150** in second arm **142**. When an elongated member is positioned in slot **150**, a portion of the elongated member may contact a head of a bone fastener positioned in the collar.

In an embodiment of a collar, arms **142** of collar **112** may include one or more openings and/or indentions **152**. Indentions **152** may vary in size and shape (e.g., circular, triangular, rectangular). Indentions **152** may be position markers and/or force application regions for instruments that perform reduction, compression, or distraction of adjacent vertebrae. In some embodiments, openings and/or indentions may be positioned in the body of the collar.

Arms **142** may include ridges or flanges **154**. Flange **154** may allow collar **112** to be coupled to a detachable member so that translational motion of the collar relative to the detachable member is inhibited. Flanges **154** may also include notches **156**. A movable member of a detachable member may extend into notch **156**. When the movable member is positioned in notch **156**, a channel in the detachable member may align with a slot in collar **112**. With the movable member positioned in notch **156**, rotational movement of collar **112** relative to the detachable member may be inhibited.

FIGS. **8**A-**8**C show views of collar **112** and ring **110** during top loading insertion of the ring into the collar. Ring **110** may be positioned as shown in FIG. **8**A and inserted past arms **142** into body **140**. FIG. **8**B depicts a cross-sectional view of ring **110** and collar **112** after insertion of the ring into the collar through slot **150**. After insertion of ring **110** into collar **112**, the ring may be rotated so that a bone fastener may be positioned through the ring. FIG. **8**C depicts a cross-sectional view of ring **110** and collar **112** after rotation of the ring in the collar.

FIGS. **9**A-**9**C show views of collar **112** and ring **110** during bottom loading insertion of the ring into the collar. Ring **110** may be positioned as shown in FIG. **9**A and inserted into body **140** through an opening in the bottom of collar **112**. In some embodiments, ring **110** may be inserted into body **140** through a groove or a slot in the bottom of collar **112**. In certain embodiments, collar **112** designed for bottom insertion of ring **110** may have narrower slot **150** than a collar designed for top insertion of a ring. Collar **112** with narrower slot **150** may allow an elongated member with a reduced diameter to be used in a spinal stabilization system. Collar **112** with narrower slot **150** may be used to reduce bulk at a surgical site.

FIG. **9**B depicts a cross-sectional view of ring **110** and collar **112** after insertion of the ring into the collar through the opening in the bottom of the collar. After insertion of ring **110** into collar **112**, the ring may be rotated so that a bone fastener may be positioned through the ring. Tolerance between an outer surface of ring **110** and an inner surface of body **140** shown in FIGS. **8**A-**8**C and **9**A-**9**C may require force to be applied to the ring to drive the ring into the body. Once ring **110** is positioned in body **140**, the ring may expand slightly. In certain embodiments, significant force may be required to remove ring **110** from body **140** (i.e., the ring may be substantially unreleasable from the body). The required force may inhibit unintentional removal of ring **110** from body **140**. FIG. **9**C depicts a cross-sectional view of ring **110** and collar **112** after rotation of the ring in the collar.

FIG. **10**A depicts bone fastener **108** before insertion of the bone fastener into ring **110** positioned in collar **112**. Splines **128** may be aligned with grooves **134** to allow passage of head **118** through ring **110** and into collar **112**. FIG. **10**B depicts bone fastener **108**, ring **110**, and collar **112** after the bone fastener has been rotated and head **118** has been coupled to seats in the ring to form bone fastener assembly **102**. Inserting bone fastener **108** through opening **144** in collar **112** (depicted in FIG. **10**A) may allow use of bone fasteners that have shanks and/or heads with larger diameters than can pass through slot **150**. Bone fasteners with large diameter shanks may form a bone fastener assembly (threaded or otherwise) that securely fastens to vertebral bone during use.

A bone fastener may be rotatably positioned in a collar such that the bone fastener is able to move radially and/or rotationally relative to the collar (or the collar relative to the bone fastener) within a defined range of motion. The range of motion may be provided within a plane, such as by a hinged connection, or within a three-dimensional region, such as by a ball and socket connection. Motion of the bone fastener relative to the collar (or the collar relative to the bone fastener) may be referred to as "angulation" and/or "polyaxial movement". FIG. **11** depicts bone fastener assembly **102** with central axis **158** of collar **112** aligned with central axis **160** of bone fastener **108**. Bone fastener **108**

may be angulated in a symmetrical conical range of motion characterized by angle at about the aligned axes. Bone fastener **108** may be constrained from motion outside of limit axis **162** by contact between neck **120** of bone fastener **108** and collar **112**. Alignment of axis **160** of bone fastener **108** with central axis **158** of collar **112** may be considered a neutral position relative to the range of motion. The alignment is a neutral position because bone fastener **108** may be angulated an equal amount in any direction from central axis **158**. When a driver is inserted into bone fastener **108**, axis **160** of bone fastener **108** may be substantially aligned with axis **158** of collar **112** to facilitate insertion of the bone fastener into a vertebral body.

In certain embodiments, a range of motion of a collar may be skewed from a full conical range of motion relative to aligned central axes of the collar and a bone fastener coupled to the collar. In some embodiments, a distal end of a collar may be shaped to skew, or bias, the range of motion from the range of motion depicted in FIG. **11**. FIGS. **12**A and **12**B depict bone fastener assemblies **102** with biased collars **112**. Body **140** of biased collar **112** may be shaped to restrict relative movement of bone fastener **108** (and/or the collar) to a skewed conical range of motion defined by limit axes **162**. As depicted by limit axes **162** in FIG. **12**A, a first arm **142** of collar **112** may approach bone fastener **108** more closely than a second arm of the collar. As suggested by limit axes **162** in FIG. **12**B, a first opening of the slot between arms **142** of collar **112** may approach bone fastener **108** more closely than a second opening of the slot.

Other biased collars may be designed to selectively restrict relative movement of collars and/or bone fasteners. In some embodiments, a biased collar may be attached to a detachable member such that a surgeon performing a minimally invasive procedure may selectively align the portion of the collar with the greater range of motion as needed. For example, the collar depicted in FIG. **12**B may be coupled to a single-level (e.g., C-shaped) sleeve so that the side of the collar (i.e., the side of the slot) with a larger range of motion is positioned next to a channel opening of the sleeve.

When a biased collar of a bone fastener assembly is coupled to a detachable member and a drive mechanism is coupled to a bone fastener of the bone fastener assembly, central axis **158** of collar **112** may align with central axis **160** of bone fastener **108** to facilitate insertion of the bone fastener into bone. In some embodiments, the bias of the collar may be so large that a flexible drive member is needed to drive the bone fastener into bone.

In some embodiments, one or more biased collars may be used in a spinal stabilization system. The spinal stabilization systems may be single-level systems or multi-level systems. Biased collars may be used to accommodate the increasing angle of the pedicle corridor for each lumbar vertebra. The angle may increase by about 5 degrees for each successive lumbar vertebra. FIGS. **13**A and **13**B depict a single-level spinal stabilization system including bone fastener assembly **102**A coupled to pedicle **164**A and vertebra **166**A and bone fastener assembly **102**B coupled to pedicle **164**B and vertebra **166**B.

A bone fastener of bone fastener assembly **102**A may engage pedicle **164**A at pedicle angle ϕA relative to sagittal plane **168**. Pedicle angle ϕA may range between about 13° and about 17°. Collar **112**A of bone fastener assembly **102**A may be unbiased. Pedicle angle ϕB may range between about 18° and about 22°. Collar **112**B may have a bias angle β of about 5°. Bone fastener assembly **102**B may engage pedicle **164**B at pedicle angle ϕB. Because the bias of collar **112**B is approximately equal to the difference between the pedicle angles of the two vertebrae, slots **150**A and **150**B in bone fastener assemblies **102**A and **102**B, respectively, may be generally aligned when both bone fasteners are in neutral positions.

Angulation of either or both collars of the bone fastener assemblies may allow fine adjustment of engagement angles of the bone fasteners. In addition, collar angulation may allow adjustment in the orientation of bone fasteners in a sagittal plane (i.e., to conform to lordosis of a spine) while still allowing the collars to be easily coupled with elongated member **104**. Elongated member **104** may be disposed in slots **150**A and **150**B and secured by closure members. In some embodiments, a flexible driver or a polyaxial driver (e.g., a driver with a universal joint) may be used to drive the heads of the bone fasteners from a position that is off-axis from the bone fasteners to reduce the size of an opening of the body needed to implant the spinal stabilization system.

A closure member may be coupled to a collar of a bone fastener assembly to fix an elongated member positioned in the collar to the bone fastener assembly. In some embodiments, a closure member may be cannulated. In certain embodiments, a closure member may have a solid central core. A closure member with a solid central core may allow more contact area between the closure member and a driver used to couple the closure member to the collar. A closure member with a solid central core may provide a more secure connection to an elongated member than a cannulated closure member by providing contact against the elongated member at a central portion of the closure member as well as near an edge of the closure member.

FIG. **1** depicts closure members **106** coupled to bone fastener assemblies **102**. FIG. **14** depicts closure member **106** prior to insertion of the closure member into a collar of a bone fastener assembly. Closure member **106** may include tool portion **170** and male modified thread **172**. Tool portion **170** may couple to a tool that allows closure member **106** to be positioned in a collar. Tool portion **170** may include various configurations (e.g., threads, hexalobular connections, hexes) for engaging a tool (e.g., a driver). Male modified thread **172** may have a shape that complements the shape of a female modified thread in arms of a collar (e.g., modified thread **148** depicted in FIG. **5**).

FIG. **15** depicts a cross-sectional representation of closure member **106** taken substantially along plane **15-15** of FIG. **14**. Closure member **106** may include removal openings **174**. A drive tool may be inserted into removal openings **174** to allow removal of closure member **106** after tool portion **170** has been sheared off. Removal openings **174** may include any of a variety of features including, but not limited to, sockets, holes, slots, and/or combinations thereof. In an embodiment, removal openings **174** are holes that pass through bottom surface **176** of closure member **106**.

A bottom surface of a closure member may include structure and/or texturing that promotes contact between the closure member and an elongated member. A portion of the structure and/or texturing may enter and/or deform an elongated member when the closure member is coupled to the elongated member. Having a portion of the closure member enter and/or deform the elongated member may couple the elongated member to the closure member and a bone fastener assembly so that movement of the elongated member relative to the bone fastener assembly is inhibited. In a closure member embodiment, such as the embodiment depicted in FIG. **15**, bottom surface **176** of closure member **106** may include point **178** and rim **180**. In some embodiments, rim **180** may come to a sharp point. In some embodiments, a height of rim **180** may be less than a height

of point **178**. In other embodiments, a height of rim **180** may be the same or larger than a height of point **178**. In some embodiments, rim **180** may not extend completely around the closure member. For example, eight or more portions of rim **180** may be equally spaced circumferentially around closure member **106**. In certain embodiments, a solid central core including point **178** and rim **180** may enhance the ability of closure member **106** to secure an elongated member in a collar.

FIG. **16** depicts a portion of a spinal stabilization system with closure member **106** coupled to collar **112** before tool portion **170** is sheared off. Closure member **106** may couple to collar **112** by a variety of systems including, but not limited to, standard threads, modified threads, reverse angle threads, buttress threads, or helical flanges. A buttress thread on a closure member may include a rearward-facing surface that is substantially perpendicular to the axis of the closure member. Closure member **106** may be advanced into an opening in a collar to engage a portion of elongated member **104**. In some embodiments, closure member **106** may inhibit movement of elongated member **104** relative to collar **112**.

FIG. **17**A depicts a cross-sectional view of closure member **106** coupled to bone fastener assembly **102**. Closure member **106** may include male modified thread **172**. Male modified thread **172** may include male distal surface **182** and male proximal surface **184**, as shown in FIG. **17**B. Collar **112** may include female modified thread **148** on an inside surface of arms **142**. Female modified thread **148** may include female proximal surface **186** and female distal surface **188**. Male proximal surface **184** may couple to female distal surface **188** during use. Male proximal surface **184** and female distal surface **188** may be load-bearing surfaces. A load may result from an upward load on closure member **106**, such as a load resulting when elongated member **104** positioned in a slot of collar **112** is secured to bone fastener assembly **102** by closure member **106**.

Raised portions **190** and recessed portions **192** may be included on male distal surface **182** and female proximal surface **186**. Cooperating surfaces **194** of modified threads **172** and **148** may contact or be proximate to one another during use. As used herein, "proximate" means near to or closer to one portion of a component than another portion of a component. Engagement of cooperating surfaces **194** of modified threads **172** and **148** during use may inhibit radial expansion of collar **112**. Engagement of cooperating surfaces **194** may inhibit spreading of arms **142** away from each other (i.e., inhibit separation of the arms). In some embodiments, cooperating surfaces **194** may be substantially parallel to a central axis of closure member **106**. In other embodiments, cooperating surfaces **194** may be angled relative to a central axis of closure member **106**.

In some embodiments, a proximal surface of a male modified thread may include raised and recessed portions. FIG. **18**A depicts a cross-sectional view of bone fastener assembly **102** coupled to closure member **106** with raised and recessed portions on a proximal surface of male modified thread **172**. FIG. **18**B depicts a cross-sectional view of raised portions **190** at male proximal surface **184** of male modified thread **172** and female distal surface **188** of female modified thread **148**. Male proximal surface **184** may include an overall positive slope S such that point A near the top of male modified thread **172** is distal from point B at the base of the male modified thread. Alternatively, male proximal surface **184** may include an overall negative slope or a slope of about zero.

In an embodiment, a bone fastener assembly and a closure member may be coupled with a running fit. A running fit (i.e., a fit in which parts are free to rotate) may result in predictable loading characteristics of a coupling of a bone fastener assembly and a closure member. Predictable loading characteristics may facilitate use of a closure member with a break-off portion designed to shear off at a predetermined torque. A running fit may also facilitate removal and replacement of closure members. In some embodiments, a closure member may include an interference fit (e.g., crest-to-root radial interference).

In an embodiment, a position (i.e., axial position and angular orientation) of a modified thread of a collar may be controlled, or "timed," relative to selected surfaces of the collar. For example, a modified thread form may be controlled relative to a top surface of a collar and an angular orientation of the slots of the collar. In some embodiments, positions of engaging structural elements of other coupling systems (e.g., thread forms) may be controlled.

Controlling a position of a modified thread form may affect a thickness of a top modified thread portion of a collar. In FIG. **5**, top modified thread portion **196** is the first modified thread portion to engage a closure member. In an embodiment, a position of a modified thread form may be selected such that the thickness of the leading edge of a top modified thread portion is substantially equal to the full thickness of the rest of the modified thread.

Controlling a position of a modified thread form of a collar may increase a combined strength of engaged modified thread portions for a collar of a given size (e.g., wall height, modified thread dimensions, and thread pitch). Controlling a position of the modified thread form may reduce a probability of failure of modified thread portions, and thus reduce a probability of coupling failure between a collar and a closure member. Controlling the position of a modified thread form in a collar of a bone fastener assembly may increase a combined strength of engaged collar and closure member modified thread portions such that failure of the modified thread portions does not occur prior to the intended shearing off of a tool portion of the closure member. For example, a tool portion of a closure member may be designed to shear off at about 90 in-lbs of torque, while the combined modified thread portions may be designed to withstand a torque on the closure member of at least 120 in-lbs.

If a thickness of a modified thread portion of a given size and profile is reduced below a minimum thickness, the modified thread portion may not significantly contribute to the holding strength of the modified thread of a collar. In an embodiment, a position of a modified thread form of a collar may be controlled such that a thickness of a top modified thread portion is sufficient for the portion to increase a holding strength of the collar. In one embodiment, a top modified thread portion may have a leading edge thickness of about 0.2 mm.

In an embodiment, a position of a modified thread form of a collar may be selected to ensure that a closure member engages a selected minimum number of modified thread portions on each arm of the collar. In an embodiment, at least two modified thread portions having a full thickness over width w of a collar arm (shown in FIG. **5**) may be engaged by a closure member at each arm. Alternatively, a closure member may engage parts of three or more modified thread portions on each arm, with the total width of the portions equal to at least two full-width portions. Allowances may be made for tolerances in the components (e.g., diameter of the elongated member) and/or anticipated misalignment between the components, such as misalignment between an elongated member and a slot. In an embodiment, a substan-

tially equal number of modified thread portions in each arm may engage the closure member when an elongated member is coupled to a bone fastener assembly.

Various instruments may be used in a minimally invasive procedure to form a spinal stabilization system in a patient. The instruments may include, but are not limited to, positioning needles, guide wires, dilators, bone awls, bone taps, sleeves, drivers, tissue wedges, elongated member length estimating tools, mallets, tissue retractors, and tissue dilators. The instruments may be provided in an instrumentation set. The instrumentation set may also include components of the spinal stabilization system. The components of the spinal stabilization system may include, but are not limited to, bone fastener assemblies of various sizes and/or lengths, elongated members, and closure members.

Instruments used to install a spinal stabilization system may be made of materials including, but not limited to, stainless steel, titanium, titanium alloys, ceramics, and/or polymers. Some instruments may be autoclaved and/or chemically sterilized. Some instruments may include components that cannot be autoclaved or chemically sterilized. Components of instruments that cannot be autoclaved or chemically sterilized may be made of sterile materials. The sterile materials may be placed in working relation to other parts of the instrument that have been sterilized.

A targeting needle may be used to locate an entry point in a vertebral body for a bone fastener of a bone fastener assembly. In some embodiments, the targeting needle may be a Jamshidi® bone marrow biopsy needle. FIG. **19** depicts an embodiment of targeting needle **198**. Targeting needle **198** may include outer housing **200** and member **202**. FIG. **20** depicts an embodiment of outer housing **200**. Outer housing **200** may include hollow shaft **204** and handle **206**. Scale markings **208** may be printed, etched, or otherwise placed on hollow shaft **204**. Scale markings **208** may be used to approximate a length of a bone fastener needed for a vertebra. Handle **206** may provide a grip that allows a user to manipulate the targeting needle. Handle **206** may include threaded portion **210**. Threaded portion **210** may couple to threading on a portion of a targeting needle member to secure the member to outer housing **200**.

FIG. **21** depicts an embodiment of member **202** of a targeting needle. Member **202** may include point **212** and cap **214**. Point **212** may be placed through a hollow shaft of an outer housing of the targeting needle. Cap **214** may include threading **216**. Member **202** may be rotated relative to the outer housing to couple threading **216** with threading in a handle of the outer housing. In some embodiments, the member may be coupled to the outer housing by another type of connection system (e.g., by placement of a key in a keyway). With member **202** positioned in an outer housing, point **212** may extend from a distal end of a hollow shaft of the outer housing. Cap **214** may be used as an impact surface for driving the targeting needle in bone.

FIG. **22** and FIG. **23** depict embodiments of guide wire **218**. Guide wire **218** may be an 18-gauge K-wire. Guide wire **218** may pass down a shaft of a targeting needle outer housing. A guide wire may be from about 15 cm to about 65 cm in length. In some embodiments, guide wires provided in an instrumentation set are about 46 cm in length. The length of guide wire **218** may allow a surgeon and/or assistants to hold at least one portion of the guide wire at all times when the guide wire is inserted into vertebral bone, even during insertion, use, and removal of instruments along a length of the guide wire. A guide wire that can be held continuously during a surgical procedure may inhibit removal or advancement of the guide wire from a desired position during a minimally invasive surgical procedure.

As depicted in FIG. **22**, a distal end of guide wire **218** may include point **220**. Point **220** may facilitate insertion of the distal end of guide wire **218** into vertebral bone. As depicted in FIG. **23**, a distal end of guide wire **218** may not be pointed. A position of an unpointed guide wire in bone may be easier to maintain during a spinal stabilization procedure.

Dilators may be used during a minimally invasive surgical procedure to push aside tissue and create space to access vertebral bone. In some embodiments, four tissue dilators of increasing diameter may be used to establish sufficient working space to accommodate instruments and spinal stabilization system components. In some embodiments, especially for a mid-vertebra or for mid-vertebrae of a multi-level stabilization system, only three dilators may be needed to form sufficient working space. Dilators in an instrumentation set may increase in diameter incrementally by a selected amount. For example, outside diameters of dilators in an instrumentation set may increase sequentially by increments of about 0.5 mm.

A bone awl may be used to breach cortical bone of a pedicle. FIG. **24** depicts an embodiment of bone awl **222**. Bone awl **222** may include handle **224**, passage **226**, and tip **228**. Handle **224** may provide a secure grip that allows a surgeon to breach cortical bone of a pedicle with tip **228**. A guide wire that is inserted in vertebral bone in a desired orientation may be inserted through passage **226** that extends through bone awl **222**. Bone awl **222** may be moved down the guide wire so that tip **228** contacts the pedicle.

Bone awl **222** may have a length that allows a guide wire positioned in vertebral bone to always be held in at least one location when the guide wire is placed through passage **226** in the needle. In some embodiments, handle **224** may be removable from a shaft of bone awl **222** so that the guide wire may always be held during use of the bone awl.

During some surgical procedures downward force and some rotation of the bone awl may be sufficient to breach cortical of a vertebra. During some surgical procedures, an impact force may be needed for the bone awl to breach cortical bone. In some embodiments, a guide wire may be removed, the bone awl may be used to breach cortical bone, and the guide wire may be reinserted. In some embodiments, a small dilator may be placed over the portion of the guide wire extending from the bone awl so that a first end of the dilator contacts the bone awl. A mallet or other impact device may be used against a second end of the dilator so that the bone awl breaches cortical bone of the vertebra. The dilator may be removed from the bone awl and contact with the guide wire may be reestablished.

A bone tap may be used to form a threaded passage of a desired depth through a pedicle and into a vertebral body. FIG. **25** depicts an embodiment of tap **230**. Tap **230** may include passage **232**, shaft **234**, removable handle **236**, flutes **238**, and indicia **240**. Passage **232** may extend through a length of shaft **234** and removable handle **236**. A guide wire positioned in vertebral bone may be inserted into a distal end of passage **232** so that tap **230** can be moved down the guide wire toward the bone.

In an embodiment of tap **230**, a proximal portion of shaft **234** may include at least one flat portion that fits in a mating portion of removable handle **236**. Proximal end of shaft **234** may also include a detent depression. The flat portion may allow for rotation of shaft **234** when removable handle **236** is rotated. An embodiment of removable handle **236** may include spring-loaded release **242**. When spring-loaded release **242** is compressed (i.e., drawn upwards), a detent in

removable handle **236** may be movable. When spring-loaded release **242** is not compressed, movement of the detent may be inhibited. When shaft **234** is positioned in removable handle **236**, the detent of the removable handle may be positioned in the detent depression of shaft **234** to couple the shaft to the removable handle.

A tap portion of tap **230** may have a known length. As shown in FIG. **25**, a tap portion of tap **230** may have a length t. In some embodiments, t may be about 20 mm, about 40 mm, about 60 mm, or greater. For example, t may be about 45 mm. X-ray monitoring of a depth of a tap portion of known length may allow a medical practitioner to assess a depth of a hole tapped in a bone. In some embodiments, the hole may be tapped to accommodate a bone fastener of a desired length. In certain embodiments, a bone fastener may be chosen to accommodate a hole tapped to a desired depth.

A guide wire positioned in vertebral bone may be held near a top of a dilator inserted over the guide wire at a surgical site. A proximal end of the guide wire may be positioned through a distal end of a passage in shaft **234** of tap **230** without a removable handle coupled to the shaft. A proximal portion of the guide wire may be held when the proximal portion of the guide wire extends beyond the top of shaft **234**. A portion of the guide wire may always be held during use of tap **230**. Shaft **234** may be moved down the guide wire until the shaft contacts the vertebral bone. The guide wire may be held near the top of shaft **234** and the guide wire may be positioned through passage **232** of removable handle **236**. When the guide wire extends out of passage **232** through removable handle **236**, the guide wire may be held above the removable handle. The handle may be coupled to the shaft using spring-loaded release **242**.

A first reading of indicia **240** relative to a proximal end of a dilator may be taken when a first flute of flutes **238** is located at a pedicle. Tap **230** may be rotated so that flutes **238** form a threaded opening through the pedicle and into a vertebral body. Flutes **238** may have a diameter that is about 0.1 mm to about 0.7 mm less than a maximum thread flight of a bone fastener to be positioned in the threaded opening formed by the flutes. In an embodiment, tap may form a thread that is about 0.5 mm less than a maximum thread flight of a bone fastener to be positioned in the threaded opening formed by the flutes. A position of tap **230** may be monitored using a fluoroscope. When the threaded opening is formed to a desired depth, a second reading of indicia **240** relative to the dilator may be taken. A length of a bone fastener to be inserted into the vertebral body may be estimated by taking the difference between the indicia readings.

After a threaded opening is formed to a desired depth, tap **230** may be removed by rotating the tap until flutes **238** are disengaged from vertebral bone. Removable handle **236** may be separated from shaft **234**, and the removable handle may be removed with the guide wire always held in at least one location. After removable handle **236** is removed from the guide wire, shaft **234** may be removed with the guide wire always held in at least one location.

A detachable member may be used as a guide to install bone fasteners of a bone fastener assembly in vertebral bone. A detachable member may be coupled to a collar of a bone fastener assembly. A distal end of a detachable member may be tapered or angled to reduce bulk at a surgical site. Instruments may be inserted into the detachable member to manipulate the bone fastener assembly. Movement of the detachable member may alter an orientation of a collar relative to a bone fastener of the bone fastener assembly. In some embodiments, a detachable member may be used as a retractor during a spinal stabilization procedure.

A detachable member for a single-level vertebral stabilization system may include one or more channels in a wall of the detachable member to allow access to an adjacent vertebra. For some single-level vertebral stabilization procedures, only single-channel detachable members (i.e., detachable members with a single channel in a wall of the detachable member) may be used. For other single-level vertebral stabilization procedures, one or more multi-channel detachable members (i.e., detachable members with two or more channels in a wall of the detachable member) may be used. Channels may provide flexibility to or enhance flexibility of a multi-channel detachable member. In some embodiments, a proximal portion of a multi-channel detachable member may have a solid circumference. A region of solid circumference in a multi-channel detachable member may enhance stability of the multi-channel detachable member. In some embodiments, a multi-channel detachable member may be longer than a single-channel detachable member.

A detachable member used at a middle vertebra in a multi-level stabilization procedure may be a multi-channel detachable member. Channels in a multi-channel detachable member may allow access to adjacent vertebrae from a middle vertebra. A detachable member used at an end vertebra of a multi-level stabilization system may be a single-channel detachable member or a multi-channel detachable member. A system for coupling a bone fastener assembly to a multi-channel detachable member may include a limiter that inhibits spreading of arms of the detachable member to inhibit release of the bone fastener assembly from the detachable member.

A channel in a wall of a detachable member may allow access to a vertebra that is to be stabilized with a spinal stabilization system being formed. In some embodiments, a single-channel detachable member may be coupled to a bone fastener assembly to be inserted into vertebral bone of a first vertebra. The single-channel detachable member may allow access to a second vertebra from the first vertebra. In other embodiments, a multi-channel detachable member may be coupled to a bone fastener assembly to be inserted into vertebral bone of a first vertebra. The multi-channel detachable member may allow access from the first vertebra to adjacent vertebrae.

Instruments may access a bone fastener assembly through a passage in a detachable member. In some embodiments, a channel in a wall of a detachable member may extend a full length of the detachable member. In some embodiments, especially in embodiments of multi-channel detachable members, a channel in a wall of a detachable member may extend only a portion of the length of the detachable member. In some embodiments, a channel in a wall of a detachable member may extend 25%, 50%, 75%, 80%, 90%, 95% or more of the length of the detachable member. A channel may extend to a distal end of a detachable member such that an elongated member inserted in the channel may pass from the detachable member into a slot of a collar of a bone fastener assembly coupled to the detachable member.

A channel in a detachable member may be any of a variety of shapes. A channel may have a width that exceeds a width (e.g., a diameter) of an elongated member that is to be inserted in the channel. In some embodiments, a channel may be a linear opening parallel to a longitudinal axis of the detachable member. In some embodiments, a channel may have a non-linear shape including, but not limited to, a helical pattern, an arc, an "L" shape, or an "S" shape. A

non-linear channel may allow an elongated member to travel along a predetermined path. In certain embodiments, adjacent detachable members may include channels with matching profiles, allowing ends of an elongated member to follow similar paths down the detachable member channels.

Movable members may extend through portions of a detachable member proximate a channel in the detachable member. Movable members may engage notches in a collar to establish a radial orientation of the detachable member on the collar and/or to inhibit rotation of the collar relative to the detachable member. A distal end of a movable member may be flat, curved, or angled. In some embodiments, a distal end of a movable member may be threaded. In other embodiments, a distal end of a movable member may be a projection that engages an opening in a collar. In some embodiments, an upper surface of a collar and/or a surface of a distal end of a movable member may be textured to inhibit rotation of the collar relative to the detachable member. In certain embodiments, a proximal end of a movable member may include a tool engaging portion. A tool engaging portion may include, but is not limited to, a hex section, a hexalobular section, a tapered section, a bead, a knot, a keyed opening, a coating, a threading, and/or a roughened surface for engaging a drive that rotates or otherwise displaces the movable member.

A cross section transverse to a longitudinal axis of a detachable member may have shapes including, but not limited to, circular, ovoid, square, pentagonal, hexagonal, and combinations thereof. In some embodiments, a detachable member may be hollow. In certain embodiments, a thickness of a hollow detachable member may be uniform. In certain embodiments, a thickness of a hollow detachable member may vary along the length of the detachable member. A detachable member with a passage extending longitudinally from a first end of the detachable member to a second end of the detachable member may be referred to as a "sleeve".

FIG. **26** depicts an embodiment of sleeve **244**. Sleeve **244** may be a multi-channel sleeve. Sleeve **244** may include wall **246**, channels **248**, passage **250**, movable members **252**, and flange **254**. Channels **248** may extend from a distal end of sleeve **244** through a portion of wall **246**. Channels **248** may allow instruments to be positioned and used to form a plane through soft tissue to one or more adjacent vertebrae. An elongated member may be inserted in the tissue plane and positioned in collars of bone fastener assemblies anchored in vertebrae and coupled to sleeves. Passage **250** may allow instruments to be positioned and used to manipulate a bone fastener assembly that is coupled to a distal end of sleeve **244**. Movable members **252** may be part of a system that couples a bone fastener assembly to sleeve **244**. In some embodiments, movable members **252** may include tool engaging portion **256**. A driver may be positioned in tool portion **256**. The driver (e.g., a hex wrench) may be used to extend or retract a distal end of movable member **252**. A distal end of sleeve **244** may include flange **254** that mates with a complementary flange on a collar of a bone fastener assembly. A distal end of sleeve **244** may be tapered to reduce bulk (e.g., reduce spin diameter) at a surgical site.

FIG. **27** depicts a top view of an embodiment of sleeve **244** coupled to a bone fastener assembly. Tool portion **126** of bone fastener **108** is a hexalobular connection.

FIG. **28** depicts a cross-sectional representation of a portion of sleeve **244** with bone fastener assembly **102** taken substantially along line **28-28** of FIG. **27**. Flange **254** of sleeve **244** may mate with flange **154** of collar **112** to inhibit translation of the sleeve relative to the collar. Sleeve **244** may also include stop **258**. Stop **258** may engage a portion of collar **112** to inhibit separation of walls **246**. During use, stop **258** may inhibit undesired separation of bone fastener assembly **102** from sleeve **244**.

FIG. **29** depicts a cross-sectional representation of a portion of sleeve **244** with bone fastener assembly **102** and elongated member **104** taken substantially along line **29-29** of FIG. **27**. Distal ends of movable members **252** may extend into notches (e.g., notches **156** depicted in FIG. **5**) in collar **112**. Portions of walls **246** of sleeve **244** may include threading. Portions of movable members **252** may include threading complementary to threaded portions of walls **246**. Threading of movable members **252** may engage threading in walls **246** such that rotation of the movable members advances or retracts the movable members relative to the walls.

As shown in FIG. **29**, collar **112** may be designed such that elongated member **104** lies below a distal end of sleeve **244**. Coupling sleeve **244** to collar **112** above elongated member **104** may reduce bulk at a surgical site. With elongated member **104** coupled to collar **112** below a distal end of sleeve **244**, the sleeve may be removed without interference from the elongated member of a spinal stabilization system.

FIG. **30** depicts an embodiment of sleeve **244**. Sleeve **244** may be a single-channel sleeve for use in single-level or multi-level spinal stabilization procedures. Sleeve **244** may be used at the outermost vertebrae to be stabilized during installation of a multi-level vertebral stabilization system. Sleeve **244** may be coupled to a collar of a bone fastener assembly with movable members **252** and/or flange **254**. Instruments may be inserted through passage **250** of sleeve **244** to access an anchored bone fastener assembly coupled to the sleeve. An instrument may be moved through channel **248** toward an adjacent vertebra to form a tissue plane in soft tissue between sleeve **244** and the adjacent vertebra.

A sleeve may be coupled to a bone fastener assembly in various ways to inhibit movement of the sleeve relative to a collar of the bone fastener assembly. A system used to couple the sleeve to the bone fastener assembly may inhibit rotation and translation of the sleeve relative to the collar.

FIG. **31** depicts a perspective view of a sleeve embodiment during connection of the sleeve to collar **112** of a bone fastener assembly. Sleeve **244** may include movable members **252**. Movable members **252** may include threaded distal end portions. FIG. **31**A depicts a detailed view of a portion of sleeve **244** and collar **112**. Collar **112** may include openings **260**. Openings **260** may be threaded. Openings **260** of collar **112** may be aligned with movable members **252**. A drive end of driver **262** may be positioned in tool engaging portion **256** of movable member **252**. Driver **262** may be rotated to couple a threaded end of movable member **252** with threads in opening **260**. The driver may be positioned in a tool opening of second movable member **252**. The driver may be used to couple a threaded end of second movable member **252** with threads in second opening **260**. Threaded connections between movable members **252** and collar **112** may inhibit movement of the collar relative to sleeve **244**.

A detachable member may be coupled to a collar of a bone fastener assembly in various ways. When a detachable member is coupled to a collar, rotation and translation of the detachable member relative to the collar may be inhibited. A system used to couple a detachable member and collar should be simple, inexpensive to implement, and should not significantly weaken the mechanical strength of the collar and/or the detachable member. Detachable members may be coupled to collars using various coupling systems including,

but not limited to, flanges, threaded connections, interlocking connections (e.g., ratcheting connection systems), and/or interference fits.

In an embodiment of an interlocking connection system, a detachable member may include an opposing pair of deflectable arms. Each deflectable arm may include a tooth. The deflectable arms may be forced outwards during coupling of a collar to the detachable member. When the collar is coupled to the detachable member, the deflectable arms may be positioned in channels in the collar, with the teeth positioned in indentions in the collar. The presence of the deflectable arms in the channels of the collar may inhibit rotation and translation of the detachable member relative to the collar. Separation of the detachable member from the collar may be achieved by insertion of an expander in the detachable member. The expander may be used to force the deflectable arms outwards and expel the teeth from the indentions.

FIGS. **32-45** depict embodiments of sleeves coupled to bone fastener assemblies. In each bone fastener assembly/sleeve embodiment depicted in FIGS. **32-43** and FIG. **45**, an elongated member seated in the collar of the bone fastener assembly would lie below a distal end of sleeve **244**. Having the elongated member below the distal end of sleeve **244** reduces bulk at the surgical site. With sleeve **244** positioned above the elongated member, interference of the secured elongated member with the sleeve is avoided during removal of the sleeve.

FIG. **32** depicts a cross-sectional representation of sleeve **244** including sleeve flange **254**. Sleeve **244** may be rotated onto collar **112** until slot **150** aligns with channel **248**. Sleeve flange **254** may engage flange **154** of collar **112** to inhibit translation of sleeve **244** relative to collar **112** of bone fastener assembly **102**.

In some detachable member and collar coupling embodiments, the detachable member and the collar may include members that work together to inhibit radial expansion of walls of the detachable member. FIG. **33** depicts an embodiment of sleeve **244** coupled to an embodiment of bone fastener assembly **102**. Sleeve **244** may include sleeve flange **254** and stop **258**. Sleeve flange **254** may engage flange **154** of collar **112** to inhibit translation of sleeve **244** relative to the collar. Stop **258** may contact ledge **264** of collar **112**. Contact of stop **258** against ledge **264** may inhibit release of collar **112** from sleeve **244** caused by radial expansion of walls of the sleeve. A stop in a sleeve and a ledge in a collar may be needed in a multi-channel sleeve embodiment. A stop in a sleeve and/or a ledge in a collar may not be needed in a single-channel sleeve embodiment or in a collar for a single-level stabilization.

In some detachable member and collar coupling embodiments, a detachable member may include a protrusion that mates with a complementary groove in a collar. Alternatively, a detachable member may include a groove that mates with a complementary protrusion of a collar. FIG. **34** depicts a cross-sectional view of sleeve **244** with ridge **266**. Ridge **266** may couple with groove **268** in collar **112**. Ridge **266** and groove **268** may form a dovetail joint. The dovetail joint may inhibit radial expansion of sleeve walls **246**. In some embodiments, such as the embodiment depicted in FIG. **35**, ridge **266** and groove **268** may not form a dovetail joint.

In some embodiments, a detachable member and/or a collar may include a locking system to inhibit rotation of the detachable member relative to the collar. The locking system may be, but is not limited to, threading, interference fits, frictional engagement, or a press-fit connection. In some embodiments, a locking system may inhibit translation and/or rotation of a detachable member relative to a collar.

FIG. **36** depicts a top view representation of an embodiment of collar **112** of a bone fastener assembly. Collar **112** includes openings **260**. In some embodiments, openings **260** may be threaded. In some embodiments, openings **260** may not include threading. The body of collar **112** adjacent to openings **260** may include extra material to provide strength to the collar.

FIG. **37** depicts a partial cross-sectional representation of an embodiment of sleeve **244** coupled to an embodiment of collar **112**, such as the collar depicted in FIG. **36**. Distal end portions of movable members **252** may extend into openings **260**. When distal end portions of movable members **252** are positioned in openings **260**, rotational movement of sleeve **244** relative to collar **112** may be inhibited. Sleeve **244** may include flange **254**. Flange **254** may engage flange **154** of collar **112** to inhibit translation of sleeve **244** relative to the collar. In an embodiment in which distal end portions of movable members in a sleeve are threaded and openings in the collar are threaded, rotation and translation of the collar relative to the sleeve may be inhibited when distal end portions of the movable members are positioned in the openings.

As depicted in FIG. **37**, portion **270** of movable member **252** may include threading. Threading of portion **270** may engage threading in wall **246** of sleeve **244**. Engagement of threading of portion **270** with threading in wall **246** may allow distal end portion of movable member **252** to advance towards, or retract from, a distal end of sleeve **244** when the movable member is rotated.

FIG. **38** depicts a top view representation of an embodiment of collar **112** of a bone fastener assembly. Collar **112** may include notches **156**. FIG. **39** depicts a partial cross-sectional representation of an embodiment of sleeve **244** coupled to an embodiment of collar **112**, such as the collar depicted in FIG. **38**. Distal end portions of movable members **252** of sleeve **244** may be extended and positioned in notches **156** of collar **112**. An interference fit between the distal end portions of movable members **252** and the body of collar **112** that defines the notches may inhibit rotation of sleeve **244** relative to the collar.

Portion **270** of movable member **252** may include threading. Threading of portion **270** may engage threading in wall **246** of sleeve **244**. Engagement of threading of portion **270** with threading in wall **246** may allow a distal end portion of movable member **252** to advance towards, or retract from, a distal end of sleeve **244** when the movable member is rotated.

In an embodiment, an inner sleeve may be positioned in a sleeve to inhibit translation and/or rotation of the sleeve relative to a collar of a bone fastener assembly. FIG. **40** depicts a cross-sectional view of sleeve **244** with inner sleeve **272**. A distal end of inner sleeve **272** may contact an upper end of collar **112**. A proximal portion of inner sleeve **272** may engage a proximal portion of sleeve **244**. The engagement may allow inner sleeve **272** to apply a force against collar **112** that presses flange **154** against flange **254** of sleeve **244** to inhibit translation of the sleeve relative to the collar. The engagement may be, but is not limited to, a threaded connection, an interference fit, a frictional fit, or a keyway type of connection.

In some embodiments, a distal end of an inner sleeve may be roughened or textured to frictionally engage a proximal surface of the collar. The frictional engagement may inhibit rotation of the sleeve relative to the collar. In some embodiments, inner sleeve **272** may include passage **274**. A pin may

pass through passage **274** into an opening in collar **112**. When a pin is positioned through passage **274** into the opening, rotation of sleeve **244** relative to collar **112** may be inhibited.

In some embodiments, threading may be used to couple a detachable member to a collar. FIG. **41** and FIG. **42** depict partial cross-sectional representations of sleeves **244** that couple to collars **112** by threaded connections. Sleeves **244** may include female threading that is complementary to male threading of collar **112**. In some embodiments, threading of the sleeve and threading of the collar may be modified threads.

FIG. **43** depicts a partial cross-sectional representation of sleeve **244** that couples to collar **112** by a threaded connection. Sleeve **244** may include male threading, and collar **112** may include complementary female threading. In some embodiments, portion **276** of collar **112** that includes threading which mates with threading of sleeve **244** may be a break-off section. Collar **112** may be held in a fixed position. Torque may be applied to sleeve **244** to shear off portion **276**.

In some embodiments, a detachable member may include a pair of hinged arms configured to couple to a collar. FIG. **44** and FIG. **45** depict embodiments of sleeves that include hinged portions. Sleeve **244** may include arms **278**. Arms **278** may be pivotally coupled together by hinge **280**. Hinge **280** may be located near a proximal end of sleeve **244**. In some sleeve embodiments, sleeve **244** may include a locking element or a biasing element (e.g., a spring) near or at hinge **280**. A locking element or biasing element may cause a clamping force to be exerted on collar **112** to maintain the collar in the sleeve and/or to inhibit rotation of collar **112** in sleeve **244**. In some embodiments, such as in the embodiment depicted in FIG. **44**, flange **254** of sleeve **244** may contact a bottom portion of collar **112**. In some embodiments, such as in the embodiment depicted in FIG. **45**, flange **254** of sleeve **244** may contact flange **154** of collar **112**.

In some detachable member embodiments, proximal portions of detachable members may be chamfered to allow ends of the detachable members to more closely approach each other than detachable members with a uniform cross section. FIG. **46** depicts sleeves **244** coupled to collars **112** engaged in adjacent pedicles **164**. Sleeves **244** may include chamfered surfaces **282**. Chamfered surfaces **282** may reduce space between proximal ends of sleeves **244**. During some surgical procedures, only one of the sleeves may be chamfered. During some surgical procedures, the use of a sleeve with a chamfered surface may allow for a smaller incision than required when using non-chamfered sleeves. In some embodiments, other types of detachable members may be used to reduce space between proximal ends of detachable members. Other types of detachable members may include, but are not limited to, detachable members of different lengths, detachable members of different diameters, and detachable members with flexible end portions.

Detachable members may be of various lengths. Detachable members of different lengths may be used in the same surgical procedure. A detachable member length used in a spinal stabilization procedure may be determined by a patient's anatomy. Detachable members may be just short enough to allow manipulation by a medical practitioner above an incision in a patient. In some embodiments, detachable members may be about 3.5 to about 11.5 cm long. For example, a single-channel detachable member may be about 10 cm long. In some embodiments, detachable members may be about 11.5 cm to about 14 cm long. For example, a single-channel or a multi-channel detachable member may be about 12.5 cm long. A multi-channel detachable member may be longer than a single-channel detachable member. In some embodiments, a multi-channel detachable member may be at least about 15 cm long. For example, a multi-channel detachable member may be about 16 cm long. Detachable members that are too long may require a longer incision and/or a larger tissue plane for insertion of a spinal stabilization system. Insertion of an elongated member may be more difficult with detachable members that are longer than necessary. Detachable members with excess length may be bulky and hard to manipulate during a surgical procedure.

A detachable member may be flexible over its entire length or include a flexible portion near a proximal end of the detachable member. A flexible portion may allow positioning of a proximal portion of a detachable member in a desired location. A flexible portion may be produced from any of various materials including, but not limited to, a surgical grade plastic, rubber, or metal. A flexible portion may be formed of various elements, including, but not limited to, a tube, a channel, or a plurality of linked segments.

FIG. **47** depicts an embodiment of sleeve **244** with a connection that allows movement of first portion **284** relative to second portion **286**. First portion **284** may be coupled to collar **112** of a bone fastener assembly. Second portion **286** may connect to first portion **284** at linkage **288**. Linkage **288** may include, but is not limited to, a locking element, a pivot point, a hinge, or a pin. In some embodiments, the linkage may be a ball and socket type of connection that allows rotational motion of second portion **286** relative to first portion **284**. During some spinal stabilization procedures, a detachable member without a second portion that is able to move relative to a first portion may be used at one vertebra, and a detachable member with a second portion that is able to move relative to a first portion may be used at one or more vertebrae that are to be stabilized.

When bone fasteners of polyaxial bone fastener assemblies are positioned in vertebral bone, detachable members coupled to collars of the bone fastener assemblies may be moved in desired positions. During surgery, a detachable member in a patient may be oriented towards an adjacent vertebra that is to be stabilized to reduce the required incision size. In some embodiments, channels of the detachable members may be aligned so that an elongated member may be positioned in collars of the bone fastener assemblies. FIG. **48** depicts an orientation of three sleeves. Sleeves **244**, **244'** may couple to collars **112**, **112'**. Bone fasteners **108**, **108'** may be inserted into vertebrae. Single-channel sleeves **244** may be coupled to collars **112** before insertion of bone fasteners **108** into two outer pedicles to be stabilized. Multi-channel sleeve **244'** may be coupled to collar **112'** before insertion of bone fastener **108'** into a central pedicle of the three adjacent pedicles. Single-channel sleeves **244** may be angled towards multi-channel sleeve **244'**. In certain embodiments, multi-channel detachable members may be coupled to all three pedicles. In other embodiments, differently shaped detachable members (e.g., circular, oval) may be used in one or more of the pedicles. Channels of the detachable members may be aligned so that an elongated member may be moved down the detachable members and into collars of the bone fastener assemblies.

In some embodiments, channels of detachable members may face a direction other than toward each other. FIG. **49** depicts sleeves **244** coupled to collars **112** oriented at an angle so that channels **248** of sleeves **244** face in different

directions. An elongated member may be curved in an appropriate shape to engage slots **150** in collars **112** when channels **248** of sleeves **244** are angled. In some embodiments, channels in the detachable member may not be longitudinal channels down the length of the detachable member. In embodiments of detachable members with non-longitudinal channels, the channels of two adjacent detachable members may not face towards each other when the openings of collars coupled to the detachable members are aligned.

In an embodiment, a frame may couple to two or more detachable members. FIG. **50** depicts a perspective view of sleeves **244** coupled to frame **290**. As used herein, a "frame" includes any of a variety of structural elements including, but not limited, rods, bars, cages, or machined blocks. In some embodiments, frame **290** may provide a rigid coupling between sleeves **244**. In other embodiments, frame **290** may allow for angular or translational movement between sleeves. For example, frame **290** may include slidable elements that allow sleeves to be translated toward each other or away from each other to facilitate compression or distraction of vertebrae. Alternatively, frame **290** may enable sleeves **244** to pivot toward each other or away from each other. In some embodiments, frame **290** may allow for movement of sleeves **244** to facilitate spinal reduction.

After a bone fastener assembly is coupled to a detachable member, a driver may be coupled to a bone fastener of the bone fastener assembly. The driver may be used to insert the bone fastener into vertebral bone.

FIG. **51** depicts an embodiment of driver **292** positioned in sleeve **244**. Sleeve **244** is coupled to bone fastener assembly **102**. Driver **292** may be coupled to collar **112** and to bone fastener **108** of bone fastener assembly **102**. Coupling driver **292** to collar **112** and to bone fastener **108** may ensure proper alignment of the driver relative to the bone fastener. Coupling driver **292** to collar **112** and to bone fastener **108** may also inhibit movement of the collar relative to the bone fastener during insertion of the bone fastener.

Driver **292** may include outer shaft **294**, inner shaft **296**, and removable handle **236**. Outer shaft **294** may include threading **298** and textured portion **300**. A portion of outer shaft **294** may be positioned in a passage through sleeve **244** (passage **250** shown in FIG. **30**). Threading **298** may couple to a modified thread of collar **112**. Textured portion **300** may facilitate rotation of outer shaft **294** so that threading **298** engages the modified thread of collar **112**. When threading **298** engages the modified thread of collar **112**, driver **292** may be securely coupled to bone fastener assembly **102**, which is securely fastened to sleeve **244**.

A distal end of inner shaft **296** may be coupled to bone fastener **108** during use. Inner shaft **296** may be coupled at a proximal end to removable handle **236** during use. Inner shaft **296** may be rotatable relative to outer shaft **294** so that bone fastener **108** can be inserted into vertebral bone. A proximal portion of inner shaft **296** may include at least one flat portion that fits in a mating portion of removable handle **236**. Removable handle **236** may be the same removable handle that is used with a bone tap that forms a threaded opening in vertebral bone for a bone fastener. Removable handle **236** may be removed from driver **292** during insertion of a guide wire through the driver so that the guide wire may be held in at least one place at all times. In some embodiments, a removable handle for the driver may be unnecessary given the length of the guide wire and/or the length of the driver (e.g., a long guide wire and/or a short driver).

FIG. **52** depicts a cross-sectional representation of a portion of an embodiment of a driver that is coupled to bone fastener **108** and collar **112** of a bone fastener assembly. Collar **112** is coupled to sleeve **244**. Sleeve **244** is positioned in dilator **302**. In some embodiments, clearance between outer shaft **294** and sleeve **244** may be relatively small. In some embodiments, the clearance between outer shaft **294** and sleeve **244** may range from about 0.1 mm to about 0.75 mm. For example, the clearance between outer shaft **294** and sleeve **244** may be about 0.25 mm (i.e., an inner diameter of the sleeve may be about 0.5 mm greater than an outer diameter of the outer shaft). Also, clearance between sleeve **244** and dilator **302** may be relatively small. The small clearances may inhibit undesired movement of the instruments relative to each other and/or reduce bulkiness at the surgical site.

Thread **298** of outer shaft **294** of the driver may couple to modified thread **148** of collar **112**. Head **304** of inner shaft **296** of the driver may couple to tool portion **126** of bone fastener **108**. Head **304** may have a complementary shape to tool portion **126** of bone fastener **108**. A guide wire may be inserted into a distal end of passage **114** of bone fastener **108** and through passage **306** of the driver. When the guide wire is inserted into passage **114** and passage **306**, a removable handle may not be coupled to inner shaft **296**.

During a minimally invasive surgical procedure, a plane may be created in tissue from a first vertebra to a second vertebra. An elongated member may be positioned in the plane during the surgical procedure. In some embodiments, a tissue plane may be formed using a targeting needle. The targeting needle may be positioned at the first vertebra. The distal end of the needle may be moved toward the second vertebra to form the plane while maintaining a position of the needle at a surface of the skin. The needle may be moved back and forth a number of times to clearly establish the plane. Care may need to be taken to avoid bending the targeting needle during establishment of the plane.

In some embodiments, a tissue wedge may be used to form a plane in tissue between a first vertebra and a second vertebra. FIG. **53** depicts an embodiment of tissue wedge **308**. Tissue wedge **308** may include handle **310** and blade **312**. Handle **310** may allow blade **312** to be easily positioned at a desired location.

Blade **312** may be a double-wedged blade. Blade **312** may have a diamond-like shape. Edges of blade **312** may be blunt to avoid severing tissue during use of tissue wedge **308**. Distal end **314** of blade **312** may be rounded. A shape of distal end **314** may inhibit damage to tissue and may facilitate movement of blade **312** towards a target location during formation of a plane in tissue between vertebrae. In some tissue wedge embodiments, tissue wedge **308** may include hook **316**. Cutting edge **318** in hook **316** may be used to sever portions of tissue (e.g., fascia) through which blade **312** cannot form a plane. Cutting edge **318** may be oriented in blade **312** so that severing of tissue results when tissue wedge **308** is pulled away from the spine.

An estimating tool may be used to estimate a distance between bone fastener assemblies anchored in vertebrae. The bone fastener assemblies may be part of a single-level or multi-level spinal stabilization system. The distance estimated by an estimating tool may be used to determine a desired length of an elongated member to be positioned in collars of the anchored bone fastener assemblies. FIG. **54** depicts an embodiment of estimating tool **320** with handle **322** and shaft **324**. Arms **326** may be pivotably coupled to coupling portion **325** of shaft **324**. Distal ends of arms **326** may be rounded. In some embodiments, distal ends of arms

326 may include members 330. Members 330 may be rounded (e.g., spherical) or elongated (e.g., tubular). Members 330 may also have other shapes to meet specific needs or requirements. In embodiments, a shape and/or a size of members 330 may be designed to fit snugly into detachable members coupled to a spinal stabilization system.

Activator 328 may be located at a proximal end of handle 322. With activator 328 unengaged, a biasing element (e.g., a spring, springs, and/or elastic member) in coupling portion 325 may allow arms 326 to assume a fully extended position. With arms 326 in a fully extended position, members 330 may achieve a maximum separation distance. Estimating tool 320 may be designed such that a maximum separation distance of members 330 exceeds an expected distance between anchored bone fastener assemblies. Fully extended arms 326 may be manually compressed and inserted into passages of sleeves coupled to anchored bone fastener assemblies. For a multi-level system, arms 326 may be inserted in detachable members coupled to the outermost bone fastener assemblies while one or more detachable members coupled to one or more inner vertebrae are held out of the way. With activator 328 unengaged, the biasing element in coupling portion 325 may force members 330 against inner walls of the detachable members.

Estimating tool 320 may be advanced toward the anchored bone fastener assemblies. In some embodiments, estimating tool 320 may be advanced toward the anchored bone fastener assemblies until members 330 contact collars and/or bone fasteners of the bone fastener assemblies. With members 330 contacting collars and/or bone fasteners, activator 328 of estimating tool 320 may be engaged. Engaging activator 328 of estimating tool 320 may limit the biasing element such that the distance between outer surfaces of members 330 does not exceed the distance between the anchored bone fastener assemblies. With activator 328 engaged and the distance between outer surfaces of members 330 fixed to indicate the distance between the anchored bone fastener assemblies, estimating tool 320 may be moved upwards to remove the estimating tool from the patient. When estimating tool 320 is moved upwards, arms 326 may compress to facilitate removal of the estimating tool from the detachable members.

Once removed from the detachable members, the biasing element may restore the distance between outer surfaces of members 330 to indicate the separation between anchored bone fastener assemblies. The distance between members 330 (e.g., the distance between outer surfaces of the members) may be used to estimate a length of an elongated member needed to couple the anchored bone fastener assemblies. The distance between members 330 may be read using a scale provided in the instrumentation kit. In some embodiments, the scale may be indicia or etching on a surface of the instrumentation kit. In an embodiment, a length of an elongated member may be chosen to be greater than a distance between members 330 to allow for bending of the elongated member and/or to allow the elongated member to extend beyond the collars of the anchored bone fastener assemblies. For example, 15 mm may be added to the distance between members 330. In some embodiments, a length of an elongated member may be chosen such that the elongated member extends 2 mm or more beyond the collars. In certain embodiments, a length of an elongated member may be chosen such that ends of the elongated member do not extend from the collars.

In the embodiment shown in FIG. 55, arms 326 of engaging tool 320 may be substantially parallel to each other and/or touching each other with activator 328 unengaged. Engaging activator 328 may cause separation of arms 326 at an angle, such that a distance between distal ends of the arms is greater than a distance between proximal portions of the arms. Estimating tool 320 may be inserted (e.g., with arms 326 together) in detachable members coupled to bone fastener assemblies anchored in vertebral bone. Activator 328 may be engaged and activated until arms 326 extend through channels of the detachable members and contact inner surfaces of the detachable members. Arms 326 may contact bone fasteners in the bone fastener assemblies. With arms 326 extended to meet resistance in the detachable members, estimating tool 320 may be withdrawn from the detachable members. During withdrawal of estimating tool 320 from the detachable members, arms 326 may be compressed toward each other as the estimating tool is moved up the detachable members and out of the body. After withdrawal of estimating tool 320 from the detachable members, arms 326 may extend back to the separation achieved when the arms were touching the bone fasteners. The distance between extended arms 326 may be used to estimate a length of an elongated member needed to couple the anchored bone fastener assemblies.

In some embodiments, an estimating tool may include a gage. FIG. 56 depicts an embodiment of estimating tool 320 with gage 332. With arms 326 of estimating tool 320 positioned together, gage 332 may have or may be set to a zero reading. With arms 326 extended to meet resistance in sleeves 244, gage 332 may provide an estimate of the distance between the sleeves. The distance between the sleeves may be used to estimate a length of an elongated member needed to couple the anchored bone fastener assemblies. In an embodiment, a length of an elongated member may be chosen to be greater than the distance measured by a gage to allow the elongated member to extend beyond slots of collars of anchored bone fastener assemblies.

In some embodiments, an elongated member positioner may be used to guide an elongated member through detachable members and to position the elongated member in collars proximate pedicles of vertebrae. FIG. 57 depicts an embodiment of elongated member positioner 334. Elongated member positioner 334 may include outer shaft 336, handle 338, inner shaft 340, and grasping member 342. In some embodiments, grasping member 342 may be a hook. A first end (i.e., proximal end) of outer shaft 336 may be connected to handle 338. A second end (i.e., distal end) of outer shaft 336 may be coupled to grasping member 342. Inner shaft 340 may pass through handle 338 and outer shaft 336. A second end (i.e., distal end 344) of inner shaft 340 may contact an elongated member positioned in grasping member 342. A first end (proximal end 346) of inner shaft 340 may extend from handle 338. Proximal end 346 of inner shaft 340 may be a knob or a thumb plate. An amount of force applied to an elongated member positioned between grasping member 342 and distal end 344 of inner shaft 340 may be controlled by the amount of pressure applied to proximal end 346 of inner shaft 340. Pressure may be applied to proximal end 346 of inner shaft 340 manually or mechanically. Mechanical means of applying pressure to proximal end 346 of inner shaft 340 include, but are not limited to, forceps handles and an adjustable rotor.

Distal end 344 of inner shaft 340 may be positioned proximate grasping member 342. An elongated member may be positioned between grasping member 342 and distal end 344 of inner shaft 340 of positioning tool 334 before or after initial insertion of the elongated member into a sleeve. The elongated member may be held between grasping member 342 and distal end 344 of inner shaft 340 with pressure

applied to proximal end **346** of the inner shaft. Distal end **344** of inner shaft **340** may be contoured (e.g., curved) to allow some motion (e.g., rocking motion) of the elongated member while the elongated member is coaxed into position with positioning tool **334**. During some installation procedures, positioning tool **334** may remain coupled to an elongated member until the elongated member is secured in collars of anchored bone fastener assemblies with closure members.

In some cases, pressure supplied to an elongated member with an elongated member positioner may not be sufficient to seat the elongated member in a collar. A seater may be used in conjunction with an elongated member positioner to maneuver an elongated member into one or more collars. During some procedures, an elongated member positioner may be removed from the elongated member before using the seater. During some procedures, the elongated member positioner may remain attached to the elongated member until closure members are secured to bone fastener assemblies to form a spinal stabilization system.

Seater **348**, shown in FIG. **58**, may include handle **350** and groove or grooves **352**. A portion of an elongated member to be positioned in collars may fit in grooves **352**. In an embodiment, an elongated member positioner may be used to align an elongated member proximate slots in one or more collars coupled to pedicles of vertebrae. Groove **352** of seater **348** may be positioned at a desired position along a length of the elongated member. A user may apply downward force with handle **350** to seat the elongated member in a collar as the elongated member positioner is used to guide the elongated member into position.

After an elongated member has been positioned and seated in collars as desired, closure members may be used to secure the elongated member to the collars. FIGS. **59**A and **59**B depict perspective views of driver **354**. Driver **354** may be used to position a closure member in a collar of a bone fastener assembly. As shown in FIG. **59**A, driver **354** may include handle **356**, elongated portion **358**, and coupling portion **360**. Coupling portion **360** may be used to engage closure member **106**. Coupling portion **360** may engage tool portion **170** of closure member **106**, shown in FIG. **59**B. In some embodiments, driver **354** may include an inner shaft. The inner shaft may couple the closure member to driver **354**. The inner shaft may couple to the tool portion of the closure member so that the tool portion is securely held after the tool portion is sheared from the closure member. In some embodiments, an end of inner shaft may be press fit into the tool portion. In some embodiments, the inner shaft may include a threaded end portion that engages a mating thread in the tool portion. Rotation of the inner shaft may allow closure member **106** to be locked in coupling portion **360** of driver **354**. Knob **362** may be used to rotate the inner shaft.

FIG. **60**A depicts driver **354** with coupled closure member **106** positioned for insertion in sleeve **244**. After insertion of driver **354** in sleeve **244**, closure member **106** may be positioned proximate collar **112**. With driver **354** positioned in sleeve **244**, as shown in FIG. **60**B, the driver may be rotated to advance closure member **106** in collar **112** and secure elongated member **104** to the collar. When closure member **106** is snug and elongated member **104** is secured, driver **354** may be disengaged from the closure member and removed from sleeve **244**. In an embodiment, driver **354** may be used to shear off the tool portion of secured closure member **106**. In some embodiments, the coupling portion of the driver may capture the sheared tool portion of the closure member. In certain embodiments, driver **354** may include a mechanism to dislodge a closure member and/or a tool portion of a closure member from the distal end of the driver.

In some embodiments, a detachable member may be held with a counter torque wrench as the tool portion of a closure member is sheared off. In an embodiment, about 90 in-lbs of torque may be required to shear off the tool portion of a closure member. A counter torque wrench may inhibit transfer of force to the patient when a closure member is being secured to a collar. FIG. **61** depicts an embodiment of counter torque wrench **364** used to inhibit application of torque to a patient's spine during shearing of a tool portion of a secured closure member. Sleeve **244** may fit in opening **366** of counter torque wrench **364**. Counter torque wrench **364** may be positioned near a proximal end of sleeve **244** during use. Force may be applied to counter torque wrench **364** in a direction opposite to rotational force applied to driver **354** to shear off the tool portion of a secured closure member. Opening **366** in torque wrench **364** may be of any shape to accommodate a cross-sectional shape of sleeve **244** and inhibit rotation of the sleeve during use.

FIG. **62** depicts an embodiment of counter torque wrench **368** designed to accommodate sleeves. Counter torque wrench **368** may include hollow shaft **370** and handle **372**. Groove **374** may be located at a distal end of hollow shaft **370**. FIG. **63** depicts counter torque wrench **368** fitted over multi-channel sleeve **244**. In an embodiment, hollow shaft **370** may be inserted through an opening in the body over sleeve **244** and advanced toward the spine until elongated member **104** is seated in groove **374**. Counter torque wrench **368** may engage the spinal stabilization system. Force may be applied to counter torque wrench **368** in a direction opposite to rotational force applied to a driver used to shear off a tool portion of a secured closure member. During a minimally invasive spinal stabilization procedure, counter torque wrench **368** may be used with various types of detachable members, including single-channel sleeves and multi-channel sleeves.

Minimally invasive procedures may involve locating a surgical site and a position for a single skin incision to access the surgical site. The incision may be located above and between (e.g., centrally between) vertebrae to be stabilized. An opening under the skin may be enlarged to exceed the size of the skin incision. Movement and/or stretching of the incision, bending of an elongated member, and angulation of collars of bone fastener assemblies may allow the length of the incision and/or the area of a tissue plane to be minimized. In some embodiments, minimally invasive insertion of a spinal stabilization system may not be visualized. In certain embodiments, insertion of a spinal stabilization system may be a top-loading, mini-opening, muscle-splitting, screw fixation technique.

Insertion of a spinal stabilization system may include gradually increasing the diameter of an opening formed in a pedicle and/or vertebral body to accept a bone fastener assembly. For example, a targeting needle may have outer diameter of about D. A bone awl inserted after the targeting needle may have an outer diameter incrementally larger than the outer diameter of the targeting needle. As used herein, an incrementally larger diameter may be large enough to allow a snug but adjustable fit. For example, the bone awl may have outer diameter of about (D+x). A tap portion of a bone tap inserted after the bone awl may have a minor diameter of about (D+2x). A bone fastener may have a minor diameter of about (D+3x). In some embodiments, x may be between about 0.1 mm and about 1.0 mm. For example, x may be about 0.5 mm. Incremental sizing of the targeting needle,

bone awl, tap, and bone fastener may promote a proper fit of the bone fastener in the vertebra to be stabilized.

In an embodiment of a spinal stabilization system insertion method, the patient may be placed in a prone position on a radiolucent table with clearance available for a C-arm of a fluoroscope. For example, a Jackson table with a radiolucent Wilson frame attachment may be used. The ability to obtain high quality images is very important. Bolsters, frames, and pads may be inspected for radiolucency prior to the operation. Placing the patient in a knee-chest position (e.g., using an Andrews table) should be avoided. Care should be taken to avoid placing the patient's spine in kyphosis during positioning of the patient.

The C-arm of the fluoroscope should be able to freely rotate between the anteroposterior, lateral, and oblique positions for optimal visualization of pedicle anatomy during the procedure. The arm should be rotated through a full range of motion prior to beginning the procedure to ensure that there is no obstruction or radio-opaque object in the way. The fluoroscope may be positioned so that Ferguson views and "bullseye" views are obtainable. Once the patient is positioned and the ability to obtain fluoroscopic images of the target levels for instrumentation has been confirmed, the patient may be prepared and draped sterilely.

For most of the lumbar region, the vertebral pedicle is an obliquely oriented cylindrical corridor. The angulation varies by approximately 5 degrees per level (e.g., L1: 5 degrees; L5: 25 degrees). A pre-operative fine-cut computed tomography image may be examined to determine any unique anatomy of the patient. Acquiring the pedicle in the most lateral and superior quadrant of the pedicle may be desirable to avoid the overriding facet during a minimally invasive procedure. A lateral entry point may allow for better screw convergence as well as less interference with the superior adjacent level facet joint. A targeting needle may be passed in a medial and inferior trajectory, thus following the natural pathway of the pedicle. Frequent fluoroscopic inspection in both an anteroposterior and lateral plane may ensure proper passage of the needle as the needle is inserted into vertebral bone.

Various techniques may be used to plan the skin incisions and entry points. In one embodiment, the planning sequence for a single-level stabilization may include the following four steps. First, an anteroposterior image may be obtained with the spinous processes centered at the target vertebral bodies. Vertical lines passing through midpoints of pedicles that are to receive bone fasteners may be marked on the patient. The lines do not represent skin entry points. The lines are markers of pedicle entry points used to estimate angles at which targeting needles to be inserted to contact the pedicles. In some embodiments, sets of vertical lines may be drawn corresponding to the lateral edges of the pedicles instead of lines corresponding to the midpoints of the pedicles.

Second, horizontal lines may be marked approximately through the centers of the pedicles (mid-pedicle lines) on the patient. In some embodiments, the lines may be drawn on the superior side of the center axes (superior to the mid-pedicle).

Third, an oblique or "bullseye" view (i.e., down a longitudinal axis of a pedicle) may be obtained on each side of the patient for each pedicle that is to be stabilized. Vertical oblique view lines may be marked on the skin at the midpoints of each of the pedicles that are to receive a bone fastener. The oblique view lines may be drawn in a different color than the vertical lines drawn during the first step. In some embodiments, vertical lines may be drawn corresponding to the lateral edges of the pedicles instead of lines corresponding to the midpoints of the pedicles.

The oblique view lines may be about 2 cm to about 3 cm away from the lateral pedicle border lines marked in the first step. For larger patients, the oblique view line may be greater than about 3 cm away from the midline marked in the first step. For smaller patients, the oblique view line may be closer than about 2 cm away from the midline marked in the first step. The intersection of the oblique view lines with the horizontal lines drawn in the second step may represent skin entry points for a targeting needle as the targeting needle passes through soft tissue at an angle towards the bony pedicle entry point. A side fluoroscopic image, the horizontal lines, and the vertical lines may help the surgeon triangulate between the skin entry points and bony entry points.

Fourth, an incision may be made in the skin between mid-pedicle lines along the vertical oblique view lines. The skin incision may be from about 2 cm to about 4 cm long. In some embodiments, the incision may be from about 2.5 cm to about 3 cm long. Limiting the length of the incision may enhance patient satisfaction with the procedure. The incisions may be pre-anesthetized with, for example, 1% lidocaine with 1:200,000 epinephrine. To blunt the pain response, a long spinal needle may be used to dock on the bone entry point and inject the planned muscle path in a retrograde fashion as well. Once the incision has been made, tissue surrounding the incision may be pulled and/or stretched to allow access to a target location in a vertebra.

After sterile preparation and draping, the pedicle entry points may be fluoroscopically rechecked to ensure that the previously marked lines correspond to the intersection of the midline of the transverse process and the lateral joint and pars interarticularis. The intersection of the facet and the transverse process provides a starting point that may help avoid the canal and follow the natural inclination of lumbar pedicles. For the spinal stabilization system described, in which sleeves coupled to bone fastener assemblies are substantially unconstrained by insertion angles of the bone fasteners, patient anatomy may determine the most advantageous insertion angles of the bone fasteners.

A scalpel may be used to make a stab wound at the junction of an oblique view line and a mid-pedicle line. In an embodiment, the scalpel may be a #11 scalpel. A targeting needle may be passed through the incision in an oblique lateral to medial trajectory towards the bony entry point defined by a lateral pedicle border line. The C-arm of the fluoroscope may be placed in an anteroposterior position for this maneuver.

As the targeting needle encounters the bony anatomy, anteroposterior fluoroscopic images may be used to place the tip of the needle at the upper outer quadrant of the pedicle. In some embodiments, the needle may be walked medially along the transverse process to the pedicle entry point. In some embodiments, the needle tip may be docked by lightly tapping the tip into the bone with a mallet or other impact device to drive the tip into the bone. In some embodiments, the needle tip may be docked by applying downward pressure to the targeting needle to force the tip into the bone.

The fluoroscope may then be moved to a lateral position. The surgeon may correct the sagittal trajectory of the needle by moving the needle in an anterior or posterior direction to match the vector of the pedicle corridor. In some embodiments, a mallet or other impact device may be used to gently advance the targeting needle into the pedicle halfway to the pedicle-vertebral body junction. In other embodiments, force may be applied to the targeting needle to drive the

targeting needle into the pedicle halfway to the pedicle-vertebral body junction. An anteroposterior image may then be obtained to confirm that the needle is approximately halfway across the pedicle in the anteroposterior view. If the tip is more than halfway across the pedicle in a lateral to medial projection, the trajectory may be too medial. Further advancement of the needle may risk passing the needle through the spinal canal. The needle may be repositioned. A new starting point or new trajectory may be obtained. If the anteroposterior image demonstrates that the needle is significantly lateral in the pedicle, then the needle may have passed along the lateral portion of the pedicle. A needle that has passed along the lateral portion of the pedicle may be withdrawn and repositioned.

Once a good trajectory has been obtained, the targeting needle may be advanced using a mallet. In some embodiments, the needle may be pushed in without a mallet. The targeting needle may be advanced to the junction of the pedicle and vertebral body under lateral fluoroscopic guidance. FIG. **64**A depicts targeting needle **198** advanced to the junction of pedicle **164**. At this point, confirmation of position and trajectory should be repeated under anteroposterior fluoroscopy. Targeting needle **198** may be further advanced to a desired depth within vertebral body **166** using a mallet or applied force. FIG. **64**B depicts targeting needle **198** advanced to the desired depth.

A scale on targeting needle **198** may be used to approximate a length of a bone fastener to be used. A first depth of targeting needle **198** may be measured relative to body surface **376** when pedicle **164** is first encountered. A second depth of targeting needle **198** may be measured relative to body surface **376** after the targeting needle has been advanced to the desired depth in vertebral body **166**. An approximate length of the pedicle screw to be used may be determined by taking a difference between the depth measurements.

After targeting needle **198** has been advanced into the bone, member **202** of the targeting needle (shown in FIG. **64**B) may be removed from the targeting needle. FIG. **64**C depicts outer housing **200** with the member removed. After removal of the member, a guide wire may be placed through a passage in targeting needle **198** into vertebral body **166**. FIG. **64**D depicts targeting needle **198** with guide wire **218** positioned through the passage in the targeting needle. Lateral fluoroscopic images may be obtained to indicate the position of guide wire **218**. In some embodiments, guide wire **218** may be pushed into vertebral body **166**. In certain embodiments, guide wire **218** may be advanced about 1 cm beyond an end of outer housing **200** to secure the guide wire in vertebral body **166**. In some embodiments, a small diameter tissue dilator may be placed over the guide wire and positioned on an upper surface of the targeting needle. The tissue dilator may provide stability to the guide wire. Added stability from the dilator may allow the guide wire to be successfully tapped into the vertebral body with a small mallet. Care should be taken to avoid kinking guide wire **218**. After guide wire **218** is secured in vertebral body **166**, outer housing **200** may be removed from the patient. FIG. **64**E depicts guide wire **218** after removal of the targeting needle.

Once the guide wire has been passed through the targeting needle and the targeting needle has been removed, the guide wire may be used as a guide to position one or more successively sized dilators around a target location in a pedicle. A dilator may be a conduit with a regular shape (e.g., cylindrical) or an irregular shape (e.g., C-shaped). A dilator may form an opening through soft tissue to the pedicle. For patients with a thick fascia, it may be advantageous to make a nick in the fascia with a scalpel blade to facilitate passage of the dilators. The dilators may be passed sequentially over the guide wire. The dilators may be rotated during insertion to facilitate dilation of surrounding tissue. The dilators may be inserted until the leading edges contact the pedicle. A distal end of a dilator may be tapered to facilitate positioning of the dilator proximate the pedicle. An instrumentation set for a spinal stabilization system may include two, three, four, or more successively sized dilators.

FIG. **65**A depicts first dilator **302**A positioned around guide wire **218**. First dilator **302**A may have an inner diameter just slightly larger than an outer diameter of guide wire **218**. As used herein, "an inner diameter just slightly larger than an outer diameter" may mean that the inner diameter is between about 0.03 mm and about 1.0 mm greater than the outer diameter. For example, an inner diameter of first dilator **302**A may be about 0.5 mm greater than the outer diameter of guide wire **218**. FIG. **65**B depicts second dilator **302**B positioned around first dilator **302**A. Second dilator **302**B may have an inner diameter just slightly larger than an outer diameter of first dilator **302**A. FIG. **65**C depicts third dilator **302**C and fourth dilator **302**D and positioned around second dilator **302**B. Third dilator **302**C may have an inner diameter just slightly larger than an outer diameter of second dilator **302**B. Fourth dilator **302**D may have an inner diameter slightly larger than an outer diameter of third dilator **302**C. Once fourth dilator **302**D is in position, dilators **302**A, **302**B, **302**C may be removed, starting with dilator **302**A. Lengths of dilators in a successively sized set may decrease with increasing diameter to facilitate removal of the smaller dilators. Care should be taken to avoid dislodging guide wire **218** during insertion and removal of the dilators. FIG. **65**D depicts fourth dilator **302**D positioned around guide wire **218** following removal of dilators **302**A, **302**B, **302**C.

After tissue dilation has been achieved, a large diameter dilator (e.g., third dilator **302**C or fourth dilator **302**D shown in FIG. **65**C) may be used to guide a bone fastener assembly and/or insertion instruments toward a target location in a pedicle. FIGS. **66**A-**66**F depict portions of a procedure for preparation of pedicle **164** and vertebral body **166** for receiving a bone fastener assembly. FIG. **66**A depicts bone awl **222** positioned over guide wire **218** in dilator **302** such that a tip of the bone awl is on or near a surface of pedicle **164**. Bone awl **222** may be driven downwards into pedicle **164** to breach cortical bone of the pedicle. FIG. **66**B depicts a position of bone awl **222** after pedicle **164** has been breached. After pedicle **164** is breached, bone awl **222** may be removed from dilator **302**. FIG. **66**C depicts guide wire **218** and dilator **302** after removal of bone awl **222**. In some embodiments, an initial passage may be formed in the pedicle and the vertebral body using a drill or a drill and tap combination.

FIG. **66**D depicts tap **230** positioned in dilator **302**. After pedicle **164** is breached, tap **230** may be inserted over guide wire **218** into dilator **302**. In an embodiment, dilator **302** may be third dilator **302**C. Tap **230** may be sized to fit snugly inside third dilator **302**C. In some embodiments, dilator **302** may be fourth dilator **302**D. In certain embodiments, fourth dilator **302**D may be inserted over third dilator **302**C after bone has been tapped through the third dilator. Tapping through third dilator **302**C rather than fourth dilator **302**D may introduce less bulk at the target site of a pedicle during the tapping procedure. In some embodiments, an outer diameter of a sleeve coupled to a bone fastener assembly to

be inserted in the pedicle may be substantially the same as an outer diameter of third dilator **302**C.

Tap **230** may include removable handle **236** and indicia **240**. Indicia **240** may be a scale. When tap **230** is positioned such that a first thread flight contacts pedicle **164**, a first measurement of the position of the tap relative to a top of dilator **302** using indicia **240** may be noted. Tap **230** may be rotated to form a threaded passage through pedicle **164** and into vertebral body **166** to a desired depth. In some embodiments, a length of the threaded portion of tap **230** may be used to determine a depth of a threaded passage formed in a bone. For a threaded portion of a known length (e.g., 30 mm, 45 mm, 60 mm), a scaled image (e.g., X-ray image) of a depth of the threaded portion in a bone monitored during tapping may allow a medical practitioner to determine the depth of the threaded passage. In some embodiments, tap **230** may form threads of major diameter about 0.5 mm smaller than a major diameter of threads of a bone fastener to be inserted into the threaded passage.

FIG. **66**E depicts a position of tap **230** after a threaded passage of a desired length has been formed in pedicle **164** and vertebral body **166**. Care should be exercised to ensure that guide wire **218** is not bent or kinked during the tapping process. The position of tap **230** relative to the end of guide wire **218** may be monitored to ensure that guide wire **218** is not dislodged or removed from the vertebra. In some embodiments, a position of tap **230** may be monitored using fluoroscopic imaging.

After a threaded passage of a desired length has been formed in pedicle **164** and vertebral body **166**, a second measurement of the position of tap **230** relative to a top of dilator **302** using indicia **240** may be noted. A length of a threaded member may be determined by taking a difference between the first and second measurements. In some embodiments, an estimate of length may be derived based upon fluoroscopic images and a known length of the tap that is visibly recognizable in the fluoroscopic images. Tap **230** may be removed from vertebral body **166** and pedicle **164** by rotating the tap out of the vertebral body and the pedicle. Handle **236** may be removed from a blade portion of tap **230**. The blade portion of tap **230** may be removed from guide wire **218** with control of the guide wire initially maintained from above the tap and then from below the tap. Care may be taken when tap **230** is removed to maintain guide wire **218** in position and to avoid damage of the guide wire. FIG. **66**F depicts dilator **302** and guide wire **218** after removal of the tap.

A bone fastener assembly with a bone fastener of an appropriate length may be selected for insertion in a patient. The size of the bone fastener may be verified with measurement indicia in an instrumentation set. In some embodiments, measurement indicia may be etched or printed on a portion of an instrumentation set. For example, the chosen bone fastener embodiment may be placed over the outline of a bone fastener embodiment printed on a tray of the instrumentation set.

The chosen bone fastener assembly may be attached to a detachable member. In an embodiment, a bone fastener assembly may be rotated on a flange of a detachable member. Movable members of the detachable member may be extended into indentations in a collar of the bone fastener assembly. A driver may be used to extend the movable members to couple with the collar. When the bone fastener assembly is coupled to the detachable member, a drive portion of a fastener driver may be coupled to a tool portion of the bone fastener. A shaft of the fastener driver may be positioned in the passage of the detachable member. A removable handle may be attached to the shaft of the fastener driver. The detachable member, collar, and bone fastener may be substantially co-axial when the fastener driver is positioned in the detachable member. In some embodiments, the removable handle may be attached to the shaft of the fastener driver after the bone fastener, collar, detachable member, and fastener driver combination is positioned down a guide wire through a dilator and against a pedicle.

FIGS. **67**A-**67**D depict portions of a procedure for inserting a bone fastener assembly into a patient. Driver **292** (coupled to the bone fastener), and sleeve **244** (coupled to the collar of the bone fastener assembly) may be inserted along guide wire **218** into dilator **302**. For spinal stabilization procedures using four successively sized dilators, dilator **302** may be fourth dilator **302**D. Guide wire **218** represents the trajectory that a bone fastener or bone fastener assembly may follow toward pedicle **164** during insertion of a spinal stabilization system. In some embodiments, tissue surrounding the incision may be pulled and/or stretched to allow a desired angular orientation of the bone fastener assembly relative to pedicle **164**. FIG. **67**A depicts driver **292** and sleeve **244** positioned in dilator **302**. After insertion of the bone fastener assembly, sleeve **244**, and driver **292** in dilator **302**, the driver may be rotated to thread the bone fastener into pedicle **164** and vertebral body **166**. The bone fastener may be advanced into the pedicle under fluoroscopic guidance to inhibit breaching of the pedicle walls. When the tip of the bone fastener advances beyond the posterior margin of vertebral body **166**, guide wire **218** may be removed to inhibit inadvertent bending of the guide wire or unwanted advancement of the guide wire.

The bone fastener may be advanced to bring the collar down snug to the facet joint. The bone fastener may then be backed off about a quarter of a turn. Backing the fastener off about a quarter of a turn may allow for full motion of the collar relative to the bone fastener. FIG. **67**B depicts driver **292** after the bone fastener has been advanced to the desired depth. After the bone fastener has been advanced to the desired depth, driver **292** may be removed from the head of the bone fastener and from dilator **302**. FIG. **67**C depicts dilator **302** and sleeve **244** after removal of the driver. After removal of the driver, dilator **302** may be removed from the patient. FIG. **67**D depicts collar **112** of bone fastener assembly and sleeve **244** after removal of the dilator.

After the bone fastener has been secured to the vertebra and the driver has been removed from the sleeve, the polyaxial nature of the collar may allow angulation of the sleeve relative to the bone fastener. Tissue surrounding the incision may be released such that the sleeve is angled toward a central location between vertebrae to be stabilized. The sleeve may be moved to facilitate positioning of instruments and/or to facilitate access to the adjacent vertebra that is to be stabilized. For example, the sleeve may be tilted towards the adjacent pedicle so that additional length of an opening in the patient is not needed. The channel in the sleeve may be turned toward the adjacent pedicle that is to be stabilized with the spinal stabilization system being formed.

A plane of dilated tissue may be created between a first pedicle and a second pedicle to be stabilized with a spinal stabilization system. A bone fastener assembly and a sleeve may be coupled to the first pedicle. The second pedicle may be adjacent to the first pedicle. In an embodiment, a tissue wedge may be placed in the sleeve coupled to the first pedicle such that the distal end of the tissue wedge contacts the head of the bone fastener. The proximal end of the sleeve

coupled to the first pedicle may be held such that tissue around the incision is not pulled or stretched. The tissue wedge may be wanded through the channel in the sleeve and the slot in the collar toward the target location at the second pedicle, thereby creating a plane in muscle and other tissue between the head of the installed bone fastener and the target location of a second bone fastener. In some embodiments, a tissue wedge may be pivoted about an inside proximal edge of the sleeve such that the distal end of the tissue wedge bluntly splits the muscle and fascia along fibers and create a tissue plane between the two pedicles. The wanding action may be repeated more than once (e.g., two or three times) to create a good working plane and displace unwanted tissue from the plane. The wanding may create a tissue plane. In some embodiments, the tissue plane may be substantially trapezoidal. In certain embodiments, a tissue plane may be created before a bone fastener assembly is inserted into a vertebra.

FIGS. **68**A-D depict some stages during use of a tissue wedge to form a tissue plane between a sleeve in a first pedicle and a target location at a second pedicle. FIG. **68**A depicts tissue wedge **308** aligned above pedicle **164**A in sleeve **244**. With a portion of tissue wedge **308** held proximate to the proximal end of sleeve **244** or resting on the proximal end of the sleeve, blade **312** of tissue wedge **308** may be moved through soft tissue from pedicle **164**A toward pedicle **164**B. FIG. **68**B depicts distal end of tissue wedge **308** positioned at pedicle **164**B. After tissue wedge **308** contacts pedicle **164**B, handle **310** may be moved toward pedicle **164**B (i.e., away from sleeve **244**) to further separate soft tissue in a plane between the pedicles. FIG. **68**C depicts tissue wedge **308** after handle **310** has been angled away from sleeve **244**. An initial plane may be created by wanding tissue wedge from pedicle **164**A to pedicle **164**B. Tissue wedge **308** may be similarly wanded back to pedicle **164**A to further establish the plane. FIG. **68**D depicts tissue wedge **308** realigned in sleeve **244** after the plane has been established with a back-and-forth motion. In some embodiments, handle **310** may be maintained proximate sleeve **244** to minimize the area of the tissue plane.

A tissue plane may be made in a variety of shapes including, but not limited to, substantially trapezoidal, substantially rhomboidal, and substantially triangular. A tissue plane with a substantially geometric shape may have the basic geometric shape with, for example, slightly curved edges and/or slightly rounded corners or apices. In some embodiments, a sleeve length may be chosen to reduce a size of a tissue plane that needs to be formed between pedicles. In certain embodiments, creating a trapezoidal tissue plane may reduce the invasiveness of a procedure. Limiting the area of the plane may promote a faster recovery time and/or may reduce an amount of post-operative pain experienced by the patient.

In an embodiment, a tissue wedge may be coupled to a portion of a sleeve to facilitate creation of a tissue plane. FIG. **69** depicts tissue wedge **308** with blade **312** pivotally coupled to a proximal extension of sleeve **244**. Tissue wedge **308** may be initially positioned in sleeve **244** with a distal end of blade **312** proximate pedicle **164**A. Handle **310** may be pivoted toward pedicle **164**A to allow wanding of blade **312** towards adjacent pedicle **164**B. If needed, cutting edge **318** may be used to sever fascia that inhibits passage of blade **312**. Sleeve **244** may be pivoted in conjunction with rotation of collar **112**. In another embodiment, sleeve **244** may be extendable (e.g., telescopic) such that a pivot point may be advanced in the direction of pedicle **164**B during wanding. The extendable portion of the sleeve may be selectively lockable using a variety of locking mechanisms including, but not limited to, a setscrew, a clip, a detent, or a pin.

In an embodiment, two pedicles may be targeted and bone fastener assemblies anchored in both pedicles before creation of a tissue plane. A tissue wedge may be inserted at either of the pedicles. In some embodiments, the sleeves may be coupled to each other at proximal ends of the sleeves. The tissue wedge may be coupled to a sleeve and the sleeve may be used as an anchor during wanding. Insertion of an elongated member into collars of bone fastener assemblies, however, may require cutting of some tissue between the two sleeves.

Other procedures may be used to create a tissue plane. For example, before targeting pedicle locations (i.e., before bone fastener insertion), a tissue wedge may be worked downward from an incision to create a tissue plane. Alternatively, a scalpel may be used to cut from the surface of the body to vertebral bone. Extensive use of a scalpel, however, may remove benefits of a minimally invasive procedure.

In an embodiment, a targeting needle may be passed through the tissue to create a tissue plane for insertion of an elongated member. As depicted in FIG. **70**A, targeting needle **198** may be placed in sleeve **244**A coupled to pedicle **164**A. Sleeve **244**A may be rotated such that channel **248** is directed toward pedicle **164**B. In some embodiments, a handle portion of targeting needle **198** may be positioned over pedicle **164**B, as depicted in FIG. **70**B. The shaft of targeting needle **198** may be wanded from sleeve **244**A (e.g., from a center of sleeve **244**A) in pedicle **164**A to a target location in pedicle **164**B to separate the soft tissue in a plane between the pedicles. FIG. **70**C depicts a distal end of targeting needle **198** positioned proximate pedicle **164**B. Targeting needle **198** may be moved back and forth to establish the plane. After targeting needle **198** contacts pedicle **164**B and the plane is established, a bone fastener assembly may be inserted in pedicle **164**B using a procedure similar to the procedure used to place a bone fastener assembly in an adjacent pedicle. FIG. **70**D depicts sleeves **244**A and **244**B located proximate pedicles **164**A and **164**B, respectively.

Once a well-defined tissue plane has been formed, a targeting needle may be passed down a first sleeve coupled to a first vertebra and then wanded along the formed plane over to a target location at a second pedicle. The target location at the second pedicle may be fluoroscopically confirmed. A bone fastener assembly coupled to a sleeve may be secured in the second pedicle using a procedure similar to the procedure used to insert a bone fastener assembly in a first pedicle. FIG. **71** depicts substantially trapezoidal tissue plane **378** between sleeves **244** coupled to adjacent vertebral bodies **166**. Sleeves **244** touch at incision **375** and cross above body surface **376**, such that a length of the incision and/or an area of tissue plane **378** may be advantageously small. Substantially trapezoidal tissue plane **378** may have a dimension at body surface **376** equal to a length of the incision. Sides of substantially trapezoidal tissue plane **378** may be define by surfaces of sleeves **244**. Opposite the body surface **376**, substantially trapezoidal tissue plane **378** may extend between collars **112**. In some embodiments, the edge of substantially trapezoidal tissue plane **378** closest vertebral bodies **166** may be substantially straight. In some embodiments, the edge of substantially trapezoidal tissue plane **378** closest vertebral bodies **166** may be curved to match a contour of bone between the vertebral bodies.

With bone fastener assemblies secured in the vertebral bodies, sleeves coupled to the bone fastener assemblies may be oriented to facilitate insertion of an elongated member in the sleeves. In some embodiments, sleeves may serve as tissue retractors during a spinal stabilization procedure. Angular motion of a collar may be limited by a range of motion allowed between the collar and the bone fastener that the collar is anchored to. Angular motion of a collar may be limited by patient anatomy. Angular motion or orientation of one collar (i.e., sleeve), however, may not depend upon a position of another collar (i.e., sleeve). In some embodiments, channel openings in the sleeves may face each other. In other embodiments, channel openings in the sleeves may be angled relative to each other in various arrangements. A distance between the sleeves may be estimated using an estimating tool. The distance between the sleeves may be used to select a length of an elongated member needed to couple the collars.

In an embodiment, flexible arms of estimating tool **320** depicted in FIG. **54** may be positioned in sleeves. With the activator disengaged, the estimating tool may be advanced toward the pedicles until the arms or members rest on the collars or bone fasteners of the bone fastener assemblies. The activator may be engaged. When the arms are withdrawn from the sleeves, a biasing element may allow the arms to extend to the length indicative of the distance between bone fastener assemblies. An elongated member length may be selected by measuring a distance between the members of the estimating tool. The measured distance may be increased by an amount to allow the elongated member to extend beyond the collars after curvature and/or insertion. In an embodiment, about 5 mm to about 30 mm (e.g., about 15 mm) may be added to the measured distance. In some embodiments, a desired length of an elongated member may be a length that allows the elongated member to extend from each collar by about 2 mm or about 3 mm. In certain embodiments, ends of an elongated member may be flush with the outer surface of one or more collars.

In an embodiment, an elongated member of desired length may be chosen by estimating a distance between the sleeves without the use of an estimating tool. The sleeves may be positioned as desired (e.g., substantially parallel to each other). A distance between the most distant outer edges of the sleeves may be estimated. The estimated distance may be increased by an amount to allow the elongated member to extend beyond the collars after insertion. In some embodiments, from about 1 mm to about 20 mm may be added to the estimated distance. In some embodiments, a desired length of elongated member may be a length that allows the elongated member to extend from each collar by about 2 mm.

An elongated member may be cut to length and contoured as desired. For example, a medical practitioner may use experience and judgment to determine curvature of an elongated member for a patient. A desired curvature for the elongated member may be determined using fluoroscopic imaging. In some embodiments, a curvature of the elongated member may be chosen such that, when the elongated member is secured to the collars of the bone fastener assemblies, sleeves coupled to the bone fastener assemblies cross at a surface of the skin. Crossing of the sleeves at a surface of the skin allows the medical practitioner to minimize trauma to a patient by minimizing incision length and tissue plane area. The elongated member may be bent or shaped with a tool (e.g., a rod bender) to allow insertion of the elongated member through channels of sleeves with various spatial locations and/or various angular orientations.

Elongated members may have shapes including, but not limited to, straight, bent, curved, s-shaped, and z-shaped. FIG. **72** depicts an embodiment of S-shaped elongated member **104**. FIG. **73** depicts an embodiment of angled elongated member **104**. FIG. **74** depicts an embodiment of bent elongated member **104**. FIG. **75** depicts an embodiment of straight elongated member **104**. In some embodiments, elongated members **104** may have a substantially circular longitudinal cross section. In certain embodiments, elongated members **104** may have other cross-sectional shapes including, but not limited to, regular shapes (oval, rectangular, rhomboidal, square) and irregular shapes. An instrumentation kit for a spinal stabilization system may include straight rods and/or pre-shaped rods. Straight rods and/or pre-shaped rods may be contoured to accommodate patient anatomy if needed during the surgical procedure.

Channels of the sleeves and slots of the collars may be oriented by rotating the sleeves to accommodate insertion and seating of the elongated member. In certain embodiments, a channel opening in a sleeve may be non-linear (e.g., bent, curved, or angled) to allow portions of the spine to be selectively stabilized. Sleeve orientation and/or design may be chosen to allow compression, distraction, and/or reduction of vertebrae. In some embodiments, there may be no constraints governing relative location and/or orientation of the sleeves. Sleeves may be forced apart or angled toward each other or away from each other to accommodate insertion of the elongated member.

Prior to insertion of the elongated member, the tissue wedge or targeting needle may be used to wand between the bone fasteners to ensure a clean plane between the bone fasteners. An end of the elongated member may be inserted at an angle or substantially longitudinally in a passage and/or channel of a sleeve coupled to a bone fastener assembly. Inserting the elongated member at an angle or substantially longitudinally allows the length of the incision and/or the area of the tissue plane to remain advantageously small. In some embodiments, sleeves coupled to anchored bone fastener assemblies may remain essentially unconstrained relative to each other during insertion of the elongated member. In certain embodiments, angular orientation of the collars may determine a trajectory of the elongated member down the sleeves and into collars of the bone fastener assemblies. Inserting the elongated member down two or more sleeves and through an open path (i.e., the tissue plane) may allow a medical practitioner to avoid surgical difficulties associated with anatomical abnormalities and/or misalignment of system components (e.g., in multi-level stabilization procedures).

Insertion of the elongated member may not be visualized subcutaneously. Therefore, a positioning tool may be used to guide the elongated member down the sleeves into slots in the collars. A distal portion of the positioning tool may be contoured. The contour may allow for some rotation of the elongated member. With slight pressure, the elongated member may be rotated subcutaneously into a substantially horizontal position and seated in the collars. The positioning tool may be held firmly while still allowing a rocking movement between the elongated member and the distal end of the positioning tool. Movement of the elongated member may allow the elongated member to be maneuvered down the sleeves and into the collars.

FIG. **76**A depicts insertion of a first end of elongated member **104** in an opening of channel **248**A of sleeve **244**A. In an embodiment, elongated member **104** may be positioned between grasping member **342** and distal end **344** of the inner shaft of positioning tool **334**, as shown in FIG.

76B. The elongated member may be held between grasping member **342** and distal end **344** of the inner shaft of positioning tool **334** with pressure applied to a proximal end of the inner shaft. As the first end of elongated member **104** is moved along the length of sleeve **244**A toward collar **112**A, a second end of the elongated member may be inserted in channel **248**B of sleeve **244**B. Channels in sleeves **244**A and **244**B may include grooves opposite channel openings to engage ends of elongated member **104** and/or to guide the elongated member along the lengths of the sleeves. Positioning tool **334** may be used to guide the elongated member along the length of the sleeves through the plane in the soft tissue.

Slots in collars **112**A, **112**B may be aligned with channels **248**A, **248**B of sleeves **244**A, **244**B, respectively, to allow elongated member **104** to be positioned in the collars. Positioning tool **334** may be used to angle the elongated member through slot **150**A such that an end of the elongated member protrudes through collar **112**A away from collar **112**B. With one end of elongated member **104** extending through slot **150**A in collar **112**A, positioning tool **334** may be used to guide the other end of the elongated member the remaining distance down second sleeve **244**B. Positioning tool **334** may then be used to seat the second end of elongated member **104** in collar **112**B and translate the elongated member to a desired location relative to the collars. The distal end of the positioning tool inner shaft may be contoured (e.g., curved and/or grooved) to allow some motion (e.g., rocking) of elongated member **104** while the elongated member is coaxed into position and/or rotated subcutaneously with the positioning tool. Pressure may be applied to inner shaft **340** to seat elongated member **104** in the slots of the collars. FIG. **76**C depicts elongated member **104** seated in collars **112**A, **112**B.

In some embodiments, a seater may be used to seat the elongated member in the collars. FIG. **76**D depicts seater **348** positioned in sleeve **244**B. In certain embodiments, seater **348** may be used to push elongated member **104** into slots in collar **112**A and/or **112**B while the positioning tool is used to maneuver the elongated member into place. Once the elongated member is positioned in the collars, fluoroscopic confirmation may ensure that the elongated member is inserted fully into each collar. Prior to securing the elongated member to bone fastener assemblies with closure members, the elongated member may be gripped firmly with the positioning tool and persuaded cephalad or caudad as needed. With the elongated member seated in the collars, orientation of the sleeves may be constrained relative to each other.

After the elongated member is seated in the collars, additional fluoroscopic confirmation of elongated member positioning may be obtained. With the elongated member satisfactorily positioned, the elongated member may be secured in place with closure members. FIG. **60**A depicts closure member **106** coupled to driver **354**. Driver **354** is positioned for insertion into sleeve **244**. A counter torque wrench may be coupled to the sleeve or to the elongated member. After insertion of driver **354** in sleeve **244**, closure member **106** may be positioned proximate collar **112**. With driver **354** positioned in sleeve **244**, as shown in FIG. **60**B, the driver may be rotated to advance the closure member in collar **112**. To ensure alignment of thread of closure member with thread of collar, the driver may initially be rotated in a direction that would result in removal of the closure member from the collar. When the user of the driver feels engagement of threading of the closure member with threading of the collar, the user may reverse the direction of rotation of the driver to secure the closure member to the driver. The closure member may secure the elongated member to the collar. Sleeve **244**A may serve as a coaxial guide to inhibit cross-threading during insertion of closure members **106**. When the closure members are snug and elongated member **104** is secured, collars **112** are angled such that slots in the collars are substantially perpendicular to the elongated member. Driver **354** may be disengaged from the closure member and removed from sleeve **244**. In some embodiments, driver **354** may be used to shear off a tool portion of a secured closure member. In certain embodiments, a coupling portion of driver **354** may capture a sheared tool portion from a closure member.

Torque required to shear off the tool portion of a closure member may be a source of pain and/or injury to a patient. In some embodiments, sleeve **244** may be held with a counter torque wrench as the tool portion of a secured closure member is sheared off. In an embodiment, about 90 in-lbs of torque may be required to shear off the tool portion of a closure member. A counter torque wrench may inhibit or reduce transfer of torque to the patient's spine. FIG. **61** depicts an embodiment of counter torque wrench **364** used above the skin to inhibit application of torque to a patient's spine during shearing of a tool portion of a secured closure member. Sleeve **244** may fit in opening **366** of counter torque wrench **364**. Counter torque wrench **364** may be positioned near a proximal end of sleeve **244** during use.

Force may be applied to counter torque wrench **364** in a direction opposite to rotational force applied to driver **354** to shear off a tool portion of closure member **106**. Thus, the tool portion of closure member **106** may be sheared off with force exerted above the incision of a patient. In some embodiments, a collar of a bone fastener assembly may be designed such that a proximal portion of the collar may be sheared off with force exerted above the incision of a patient. In some embodiments, closure member **106** may be designed (e.g., with a solid central core) such that the torque required to shear off the tool portion does not adversely affect the body of the closure member or the coupling between the closure member and the collar. Opening **366** in torque wrench **364** may be of any shape to accommodate a cross-sectional shape of sleeve **244**.

In some embodiments, counter torque wrench **368** shown in FIG. **63** may be used to inhibit application of torque to a patient's spine. Counter torque wrench sleeve **370** may be inserted through the opening in the body over sleeve **244**. Counter torque wrench sleeve **370** may be advanced toward the spine until elongated member **104** is seated in groove **374** of the counter torque wrench sleeve. Force may be applied to counter torque wrench **368** in a direction opposite to rotational force applied to a driver used to shear off a tool portion of a secured closure member.

Coupling failure between a collar and a closure member of a bone fastener assembly may be a concern during surgery. If failure occurs while locking down an elongated member to a bone fastener assembly in a single- or multi-level system, the failure may require removal of one or more locked closure members and the elongated member to extract a failed bone fastener assembly. Coupling failure may occur during application of other loads, such as loads used to achieve reduction with a spinal stabilization system.

FIG. **77** depicts a distal portion of driver **380** that may be used to remove closure member **106** depicted in FIGS. **14** and **15**. A distal end of driver **380** may include two prongs designed to fit in removal openings **174** of closure member **106**. Driver **380** may be inserted in a sleeve to engage a closure member. A handle of driver **380** may allow a medical

practitioner to apply force in a rotational direction necessary to remove the closure member. In some embodiments, a counter torque wrench may be used to inhibit application of torque to the patient's spine during removal of a closure member. The closure member may be removed and replaced as necessary.

After a closure member is successfully secured to a collar and a tool portion of the closure member has been sheared off, the driver may be removed from the sleeve coupled to the anchored bone fastener assembly. FIG. **78**A depicts an assembled spinal stabilization system following removal of driver **354**. Key **262**, shown in FIG. **78**B, may be used to rotate movable members in sleeves **244**A, **244**B. Rotation of movable members in sleeves **244**A, **244**B may release the movable members from the collars. Thus, sleeves **244**A, **244**B may be uncoupled from the collars above the incision. FIG. **78**C depicts assembled spinal stabilization system **100** following removal of sleeve **244**A. FIG. **78**D depicts assembled spinal stabilization system **100** coupled to adjacent pedicles following removal of sleeve **244**B.

A spinal stabilization system may be used to stabilize two or more vertebral levels (i.e., at least three adjacent vertebrae). In an embodiment, an incision may be made in the skin between the outermost vertebrae to be stabilized. A first bone fastener assembly may be coupled to a first sleeve. The first bone fastener may be threaded into a first pedicle at a target location such that the first sleeve extends above the body surface. The first sleeve may rotate about the head of the first bone fastener. A tissue plane may be created between a channel opening in the first sleeve and a target location at a second pedicle. In an embodiment, the second pedicle may be adjacent to the first pedicle. A second bone fastener assembly may be coupled to a second sleeve and threaded into the second pedicle through the incision. Another tissue plane may be created between the first sleeve or the second sleeve and a target location in a third pedicle. The third pedicle may be adjacent to the first pedicle and/or the second pedicle. A third bone fastener assembly may be coupled to a third sleeve and threaded into the third pedicle through the incision.

In an embodiment of a method for a two-level spinal stabilization procedure, an incision may be made above a target location in a middle pedicle. A first bone fastener may be anchored to the middle pedicle. After the first bone fastener is secured, second and third bone fasteners may be coupled to outer pedicles as desired by pulling and/or stretching tissue surrounding the incision to allow access to the outer pedicles.

Channel openings in sleeves coupled to three bone fastener assemblies may be oriented to allow insertion of an elongated member to achieve two-level spinal stabilization. FIGS. **79**A-**79**E depict insertion and seating of an elongated member in a two-level spinal stabilization system. Use of a rod positioner and/or seater is implied but not shown in FIGS. **79**A-**79**E. FIG. **79**A depicts insertion of a first portion of elongated member **104** through channel **248'** of multi-channel sleeve **244** and into channel **248** of sleeve **244**B. As the first portion of elongated member **104** is moved down the length of channels **248**, **248'** toward collars **112**, **112'**, a second portion of the elongated member may be inserted in channel **248** of sleeve **244**A. In some embodiments, elongated member **104** may be moved down channels **248**, **248'** using a positioning tool. As elongated member **104** is advanced toward collars **112**, **112'**, the elongated member may pass through an opening in the skin and into the tissue plane. FIG. **79**B depicts elongated member **104** in channels **248**, **248'**. Channels **248** in sleeves **244**A, **244**B may include grooves to engage ends of elongated member **104** and/or to guide the elongated member down the lengths of the sleeves. In certain embodiments, channel openings may be curved or angled to accommodate various elongated member configurations.

FIG. **79**C depicts elongated member **104** engaged in channels **248**, **248'**. As elongated member **104** is advanced toward collars **112**, **112'**, a first end of the elongated member may emerge through slot **150** in collar **112** coupled to sleeve **244**B. FIG. **79**D depicts elongated member **104** after the elongated member has emerged through slot **150** in collar **112** coupled to sleeve **244**B. In some embodiments, a seater may be used to position elongated member **104** in collars **112**, **112'**. FIG. **79**E depicts elongated member **104** seated in collars **112**, **112'**.

FIGS. **80**A-**80**C depict perspective views of various orientations sleeves **244** may assume relative to bone fasteners **108**, **108'**. In two-level and multi-level spinal stabilization systems, an orientation of a sleeve coupled to an anchored bone fastener assembly is not constrained by an orientation of one or more other collars coupled to adjacent bone fastener assemblies. FIGS. **80**A-**80**C also depict various orientations that bone fasteners **108**, **108'** may assume relative to each other. Bone fasteners **108**, **108'** may be offset from each other (i.e., non-planar) and/or be inserted in pedicles at opposing angles. The range of possible orientations of bone fasteners in pedicles may allow a spinal stabilization system to securely conform to a patient's spine.

After an elongated member has been positioned and seated in collars as desired, closure members may be used to secure the elongated member to the collars. One or more counter torque wrenches may be used during shearing of the tool portions of the closure members. In an embodiment, counter torque wrench **364**, depicted in FIG. **61**, may be used with sleeves **244**A, **244**B. Counter torque wrench **368**, depicted in FIG. **62**, may be used with multi-channel sleeves and/or single-channel sleeves.

In certain embodiments, an external frame may be used to impose a desired constraint on one or more sleeves. For example, an external frame may hold one or more sleeves in a particular location and/or orientation such that a desired relative positioning of vertebrae may be achieved. An external frame may be used to impose a distance and/or angle between sleeves to achieve distraction or compression of vertebrae. Reduction of vertebrae may be achieved when an external frame is used to adjust a relative height of the sleeves.

In some embodiments, a spinal stabilization system may be inserted using an invasive procedure. Since insertion of a spinal stabilization system in an invasive procedure may be visualized, cannulated components (e.g., bone fasteners) and/or instruments (e.g., detachable members) may not be needed for the invasive (i.e., open) procedure. Thus, a bone fastener used in an invasive procedure may differ from a bone fastener used in a minimally invasive procedure. FIG. **81** depicts a perspective view of an embodiment of bone fastener **108** that may be used in an invasive procedure.

Bone fastener **108** may include shank **116**, head **118**, and neck **120**. Shank **116** may include threading **122**. In some embodiments, threading **122** may include self-tapping start **124**. Self-tapping start **124** may facilitate insertion of bone fastener **108** into vertebral bone. Head **118** of bone fastener **108** may include various configurations to engage a driver that inserts the bone fastener into a vertebra. In certain embodiments, the driver may also be used to remove an installed bone fastener from a vertebra.

In some embodiments, head **118** may include one or more tool portions **126**. Tool portions **126** may be recesses and/or protrusions designed to engage a portion of the driver. Driver **380** depicted in FIG. **77** may be used to engage bone fastener **108** with tool portions **126** as depicted in FIG. **81**. Head **118** of bone fastener **108** may include one or more splines. In some embodiments, bone fastener **108** may be used with a collar, a ring, and/or a closure member described for use with a cannulated bone fastener. In certain embodiments, bone fasteners with closed collars may be used in an invasive spinal stabilization procedure. In certain embodiments, fixed bone fasteners (e.g., open fixed bone fasteners) may be used in an invasive spinal stabilization procedure.

In some embodiments, tools used in an invasive procedure may be similar to tools used in a minimally invasive procedure. In certain embodiments, methods of installing a spinal stabilization system in an invasive procedure may be similar to methods of installing a spinal stabilization system in a minimally invasive procedure.

Further modifications and alternative embodiments of various aspects of the invention will be apparent to those skilled in the art in view of this description. Accordingly, this description is to be construed as illustrative only and is for the purpose of teaching those skilled in the art the general manner of carrying out the invention. It is to be understood that the forms of the invention shown and described herein are to be taken as the presently preferred embodiments. Elements and materials may be substituted for those illustrated and described herein, parts and processes may be reversed, and certain features of the invention may be utilized independently, all as would be apparent to one skilled in the art after having the benefit of this description of the invention. Changes may be made in the elements described herein without departing from the spirit and scope of the invention as described in the following claims.

What is claimed is:

1. A method of implanting a spinal stabilization system, comprising:

forming an incision at a desired site through skin of a patient;

anchoring a first bone fastener assembly to a first vertebral body at a first target location, said first bone fastener assembly comprising a first bone screw and a first collar, said first collar coupled to the first bone screw;

disposing a first sleeve between the incision and the first bone fastener assembly, the first sleeve having a first proximal end region and a first distal end region with a first passage defined therebetween, the first sleeve defining a first channel in communication with the first passage along at least portion of a length of the first sleeve the first distal end region being disposed proximate the first bone fastener assembly and the first proximal end region being disposed proximate the incision;

anchoring a second bone fastener assembly to a second vertebral body at a second target location, said second bone fastener assembly comprising a second bone screw and a second collar, said second collar coupled to the second bone screw;

disposing a second sleeve towards the second bone fastener assembly, the second sleeve having a second proximal end region and a second distal end region with a second passage defined therebetween, the second sleeve defining a second channel in communication with the second passage along at least a portion of a length of the second sleeve, the second distal end region being disposed proximate the second bone fastener assembly and the second proximal end region being disposed proximate the incision;

inserting an elongate member through the incision and along the first passage to a position adjacent the first collar; and

securing the elongate member to the first collar.

2. The method of claim **1**, wherein anchoring die first bone fastener assembly includes screwing the first bone screw to the first vertebral body at the first target location.

3. The method of claim **2**, wherein the first sleeve is detachably coupled to the first collar prior to screwing the first bone screw to the first vertebral body.

4. The method of claim **1**, wherein the elongate member is inserted substantially longitudinally through the incision.

5. The method of claim **4**, wherein the elongate member is angled in a first orientation relative to the skin prior to inserting through the incision and rotated to a second orientation subcutaneously.

6. The method of claim **1**, wherein during inserting, at least a portion of the elongate member extends outwardly from the first sleeve through the first channel.

7. The method of claim **1**, wherein the first collar has a slot defined therein to receive the elongate member, and further wherein the first channel of the first sleeve is defined at least in the first distal end region of the first sleeve; the first channel being aligned with the slot while the elongate member is inserted to the position adjacent the first collar.

8. The method of claim **7**, wherein the first collar comprises a body and at least two arms extending therefrom, the slot being defined between the arms.

9. The method of claim **1**, wherein the elongate member is secured to the first collar by engaging at least one closure member to the first collar.

10. The method of claim **9**, wherein the at least one closure member is delivered along the first passage of the first sleeve to the first collar.

11. The method of claim **1**, wherein the first channel is defined along a majority of the length of the first sleeve.

12. The method of claim **1**, wherein the first sleeve includes a sleeve flange and wherein the first collar includes a collar flange, and wherein the sleeve flange is configured to mate with the collar flange to inhibit translation of the first sleeve relative to the first collar.

13. The method of claim **1**, further comprising estimating a distance between the first collar and the second collar.

14. The method of claim **13**, further comprising selecting a length of the elongate member corresponding to the estimated distance.

15. The method of claim **1**, further comprising:

forming a dilated tissue plane between the first target location and the second target location.

16. The method of claim **15**, wherein forming the dilated tissue plane includes moving a tissue wedge from the first sleeve toward the second target location.

17. The method of claim **1**, wherein the second channel is aligned facing the first channel; and further wherein during inserting of the elongate member, the second end portion of the elongate member is received within the second channel.

18. The method of claim **1**, further comprising using a frame to couple the second proximal end region to the first proximal end region.

19. The method of claim **1**, wherein the first channel extends substantially the entire length thereof, and further wherein, during inserting of the elongate member, the first end portion of the elongate member is received in the first channel and the second end portion of the elongate member is received in the second channel.

20. The method of claim **1**, further comprising:

anchoring a third bone fastener assembly to a third target location between the first target location and the second target location, said third bone fastener assembly comprising a third bone screw and a third collar, said third collar coupled to the third bone screw; and further wherein inserting the elongate member includes positioning an intermediate portion of the elongate member adjacent the third collar, and securing the elongate member includes securing the intermediate portion of the elongate member to the third collar.

21. The method of claim **20**, further comprising:

detachably coupling an intermediate sleeve to the third collar, the intermediate sleeve having a third proximal end region and a third distal end region with a third passage defined therebetween, the intermediate sleeve defining opposing channels in communication with the third passage along at least a length of the intermediate sleeve; and further wherein during positioning of the elongate member, the elongate member extends through the opposing channels of the intermediate sleeve.

22. The method of claim **1**, further comprising sequentially dilating a working space between the incision and the first target location prior to anchoring the first bone screw.

23. The method of claim **1**, wherein inserting the elongate member includes inserting the elongate member along the second passage to a position adjacent the second collar.

24. A method for performing spinal stabilization surgery, said method comprising:

coupling a first sleeve to a first bone fastener assembly, said first sleeve comprising a first sleeve flange, said first bone fastener assembly comprising a first bone screw and a first collar, said first collar coupled to the first bone screw, and said first collar comprising a first slot and a first collar flange, wherein said first sleeve flange detachably couples with said first collar flange to inhibit translational motion of the first collar relative to the fist sleeve;

anchoring the first bone fastener assembly to a first vertebral body;

coupling a second sleeve to a second bone fastener assembly, said second sleeve comprising a second sleeve flange, said second bone fastener assembly comprising a second bone screw and a second collar, said second collar coupled to the second bone screw, and said second collar comprising a second slot and a second collar flange, wherein said second sleeve flange detachably couples with said second collar flange to inhibit translational motion of the second collar relative to the second sleeve;

anchoring the second bone fastener assembly to a second vertebral body; and

inserting a rod between the first slot and the second slot,

wherein the inserted rod provides support between the fist vertebral body and the second vertebral body.

25. A method of implanting a spinal stabilization system utilizing minimally-invasive surgery, said method comprising:

detachably coupling a first bone fastener assembly to a first sleeve, said first bone fastener assembly comprising a first bone screw and a first collar, said first collar comprising a first collar flange, said first sleeve comprising a first sleeve flange, wherein said first sleeve flange detachably couples with said first collar flange to inhibit translational motion of the first collar relative to the first sleeve;

anchoring the first bone fastener assembly to a first vertebral body by screwing the first bone screw to the first vertebral body;

detachably coupling a second bone fastener assembly to a second sleeve, said second bone fastener assembly comprising a second bone screw and a second collar, said second collar comprising a second collar flange, said second sleeve comprising a second sleeve flange, wherein said second sleeve flange detachably couples with said second collar flange to inhibit translational motion of the second collar relative to the second sleeve;

anchoring the second bone fastener assembly to a second vertebral body by screwing the second bone screw to the second vertebral body;

inserting a rod between the first collar and second collar;

securing the rod to the first collar; and

securing the rod to the second collar.

26. The method of claim **25**, further comprising the step of forming at least one minimally-invasive incision prior to inserting the rod.

27. The method of claim **25**, further comprising the step of moving the first sleeve relative to the second sleeve to facilitate compression, distraction, or reduction of the first vertebral body.

28. The method of claim **27**, wherein upon moving the first sleeve relative to the second sleeve is facilitated with a flame coupled to the first sleeve.

29. The method of claim **25**, further comprising the step of bending the rod prior to inserting the rod.

30. The method of claim **25**, wherein the step of securing the inserted rod to the first collar includes securing a closure member to the first collar.

31. The method of claim **25**, further comprising the step of using a locking system to inhibit rotational movement of the first sleeve relative to the first collar prior to anchoring the first bone fastener assembly.

32. The method of claim **31**, wherein the locking system comprises a moveable member, and

wherein inhibiting rotational movement comprises engaging at least one moveable member with the first sleeve and the first collar.

33. The method of claim **25**, wherein the first sleeve flange detachably couples with the first collar flange to form a dovetail joint.

34. The method of claim **25**, wherein the first sleeve flange is a ridge or groove.

35. The method of claim **25**, wherein the first collar flange is a ridge or groove.

36. The method of claim **25**, wherein the first sleeve flange is a protrusion, and

wherein the first coils flange is a groove that mate with to protrusion to inhibit translational motion oft. first collar relative to the first sleeve.

37. The method of claim **25**, wherein the tat sleeve flange is a groove, and

wherein the first collar flange is a protrusion that mate with the groove to inhibit translational motion of the first collar relative to the first sleeve.

* * * * *

UNITED STATES PATENT AND TRADEMARK OFFICE

CERTIFICATE OF CORRECTION

PATENT NO. : 7,250,052 B2
APPLICATION NO. : 10/697793
DATED : July 31, 2007
INVENTOR(S) : Michael E. Landry et al.

It is certified that error appears in the above-identified patent and that said Letters Patent is hereby corrected as shown below:

Column 50, line 7:
In claim 2, please delete the word "die" and insert therefore -- the --.

Signed and Sealed this

First Day of September, 2009

David J. Kappos

David J. Kappos
Director of the United States Patent and Trademark Office