US006010502A

United States Patent [19]

Bagby

[11] **Patent Number: 6,010,502**

[45] **Date of Patent: *Jan. 4, 2000**

[54] **METHOD AND APPARATUS FOR CONJOINING BONE BODIES**

[75] Inventor: **George Bagby**, Spokane, Wash.

[73] Assignee: **Spine-Tech, Inc.**, Minneapolis, Minn.

[*] Notice: This patent is subject to a terminal disclaimer.

[21] Appl. No.: **08/939,704**

[22] Filed: **Sep. 29, 1997**

Related U.S. Application Data

[63] Continuation of application No. 08/577,143, Dec. 19, 1995, Pat. No. 5,709,683.

[51] **Int. Cl.**[7] **A61B 17/70**

[52] **U.S. Cl.** **606/61**; 623/17

[58] **Field of Search** 606/61, 72, 73, 606/86; 623/16, 17

[56] **References Cited**

U.S. PATENT DOCUMENTS

3,989,284	11/1976	Blose	285/332.2
4,662,891	5/1987	Noiles	623/22
4,778,469	10/1988	Lin et al.	623/16
4,828,563	5/1989	Muller-Lierheim	623/16
4,834,757	5/1989	Brantigan	623/17
4,878,915	11/1989	Brantigan	623/17
4,946,378	8/1990	Hirayama et al.	623/17
4,961,740	10/1990	Ray et al.	606/61
5,015,247	5/1991	Michelson	606/61
5,055,104	10/1991	Ray	606/61
5,074,880	12/1991	Manset	623/20
5,084,050	1/1992	Draenert	606/77
5,171,327	12/1992	Koch et al.	623/16
5,263,953	11/1993	Bagby	606/61
5,403,136	4/1995	Mathys	411/310
5,423,817	6/1995	Lin	606/61
5,443,515	8/1995	Cohen et al.	623/17
5,489,307	2/1996	Kuslich et al.	623/17
5,489,308	2/1996	Kuslich et al.	623/17
5,499,892	3/1996	Reed	411/5
5,534,031	7/1996	Matsuzaki et al.	623/17
5,591,235	1/1997	Kuslich	623/17

FOREIGN PATENT DOCUMENTS

3505567 A1 6/1986 Germany .

OTHER PUBLICATIONS

Stress Shielding Reduced by a Silicon Plate–Bone Interface, Donna L. Korvick, Jarrett W. Newbrey, George W. Bagby, Ghery D. Pettit & James D. Lincoln, Acta Orthop Scand; 1989, 60(5):611–6, pp. 611–616.

Transmission of Disease Through Transplantation of Musculoskeletal Allografts, The Journal of Bone and Joint Surgery, Nov., 1995 77–A, pp. 1742–1754.

Anterior Cervical Interbody Fusion with Threaded Cylindrical Bone, Jose M. Otero Vich, M.D., J. Neurosurg, vol. 63, Nov., 1985, pp. 750–753.

Primary Examiner—Michael Buiz
Assistant Examiner—David O. Reip
Attorney, Agent, or Firm—Wells, St. John, Roberts, Gregory & Matkin, P.S.

[57] **ABSTRACT**

A bone joining implant has a rigid, implantable base body having an outer surface with at least one bone bed engaging portion configured for engaging between a pair of bone bodies to be joined. At least one spline is provided by the bone bed engaging portion, the spline being constructed and arranged to extend outwardly of the body and having an undercut portion. Upon implantation, the undercut portion of the implant is configured to engage with a bone bed provided in the bone bodies to be joined so as to provide instantaneous fixation there between. In one embodiment, the implant is a vertebral interbody fusing device. The base body is cylindrical and the spline is an undercut thread helically configured about the body. In another embodiment, the base body forms a bridging portion for encircling a vertebra to be removed, and splines in the form of strips of material extend outwardly of top-most and bottom-most portions of the body. Each spline has a undercut portion such that each spline mates in interlocking engagement with top-most and bottom-most neighboring vertebra having bone beds for receiving the splines there along. The mid-most vertebra is then removed (corpectomy), after which an enforcing brace is received therein.

33 Claims, 14 Drawing Sheets

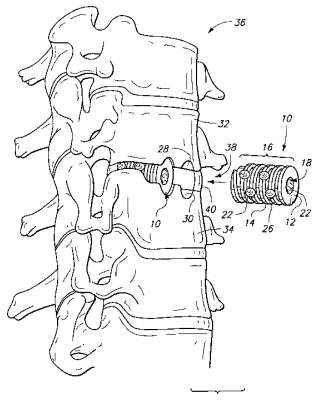

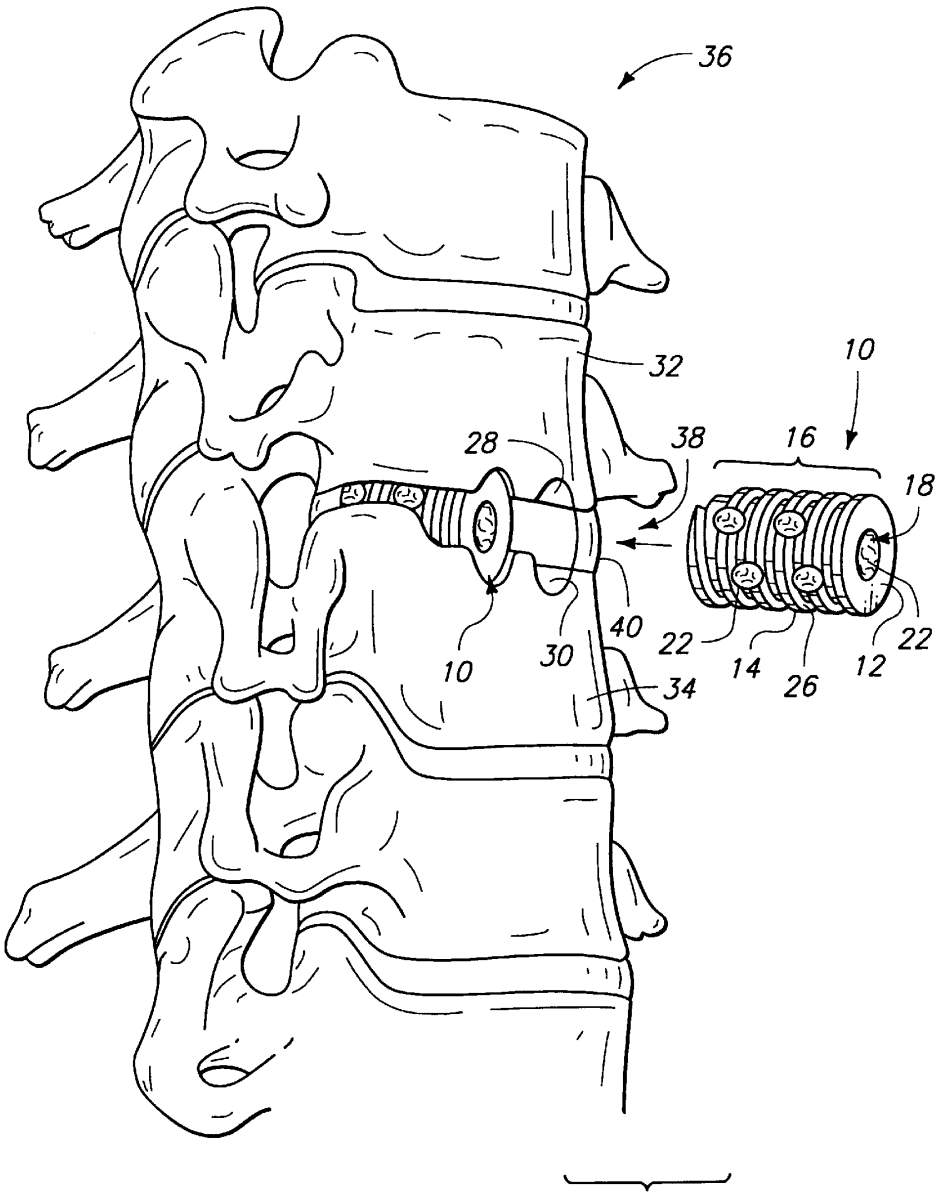

Fig. 1

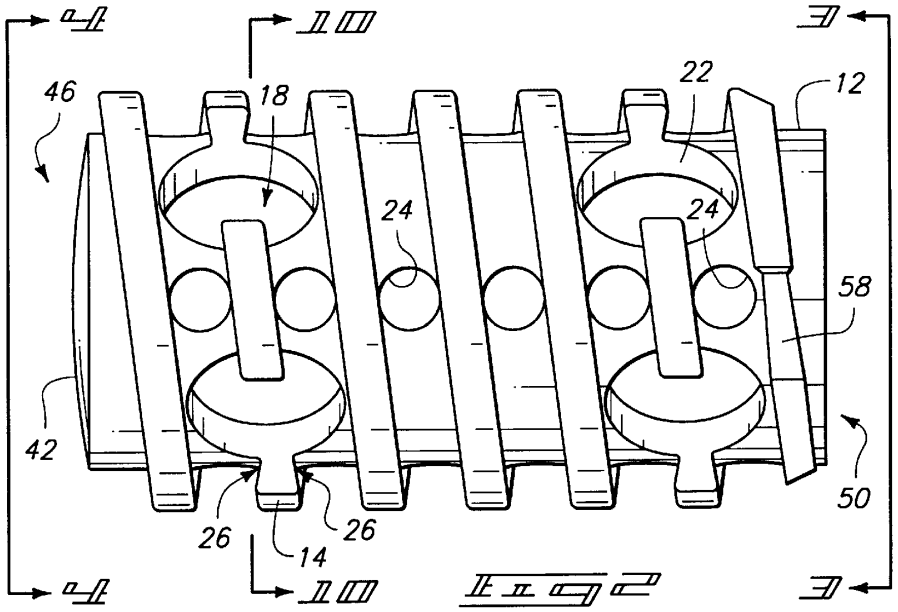

Fig 2

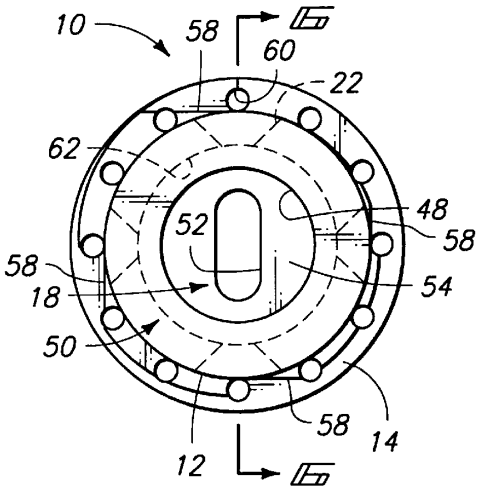

Fig 3

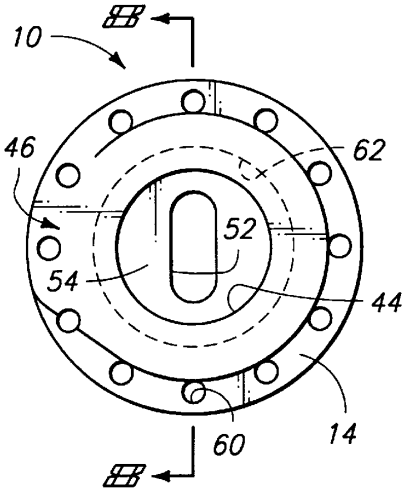

Fig 4

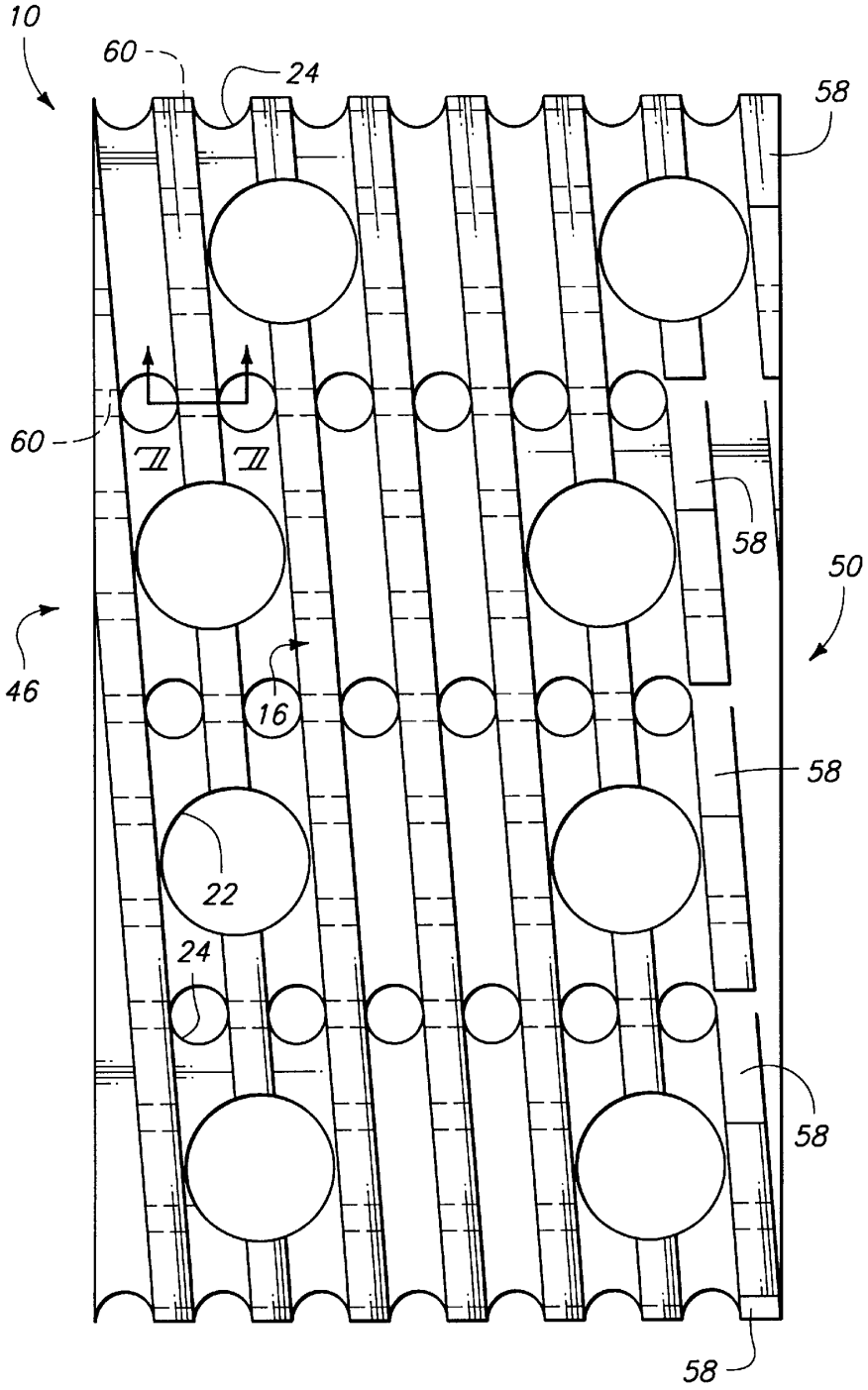

FIG 5

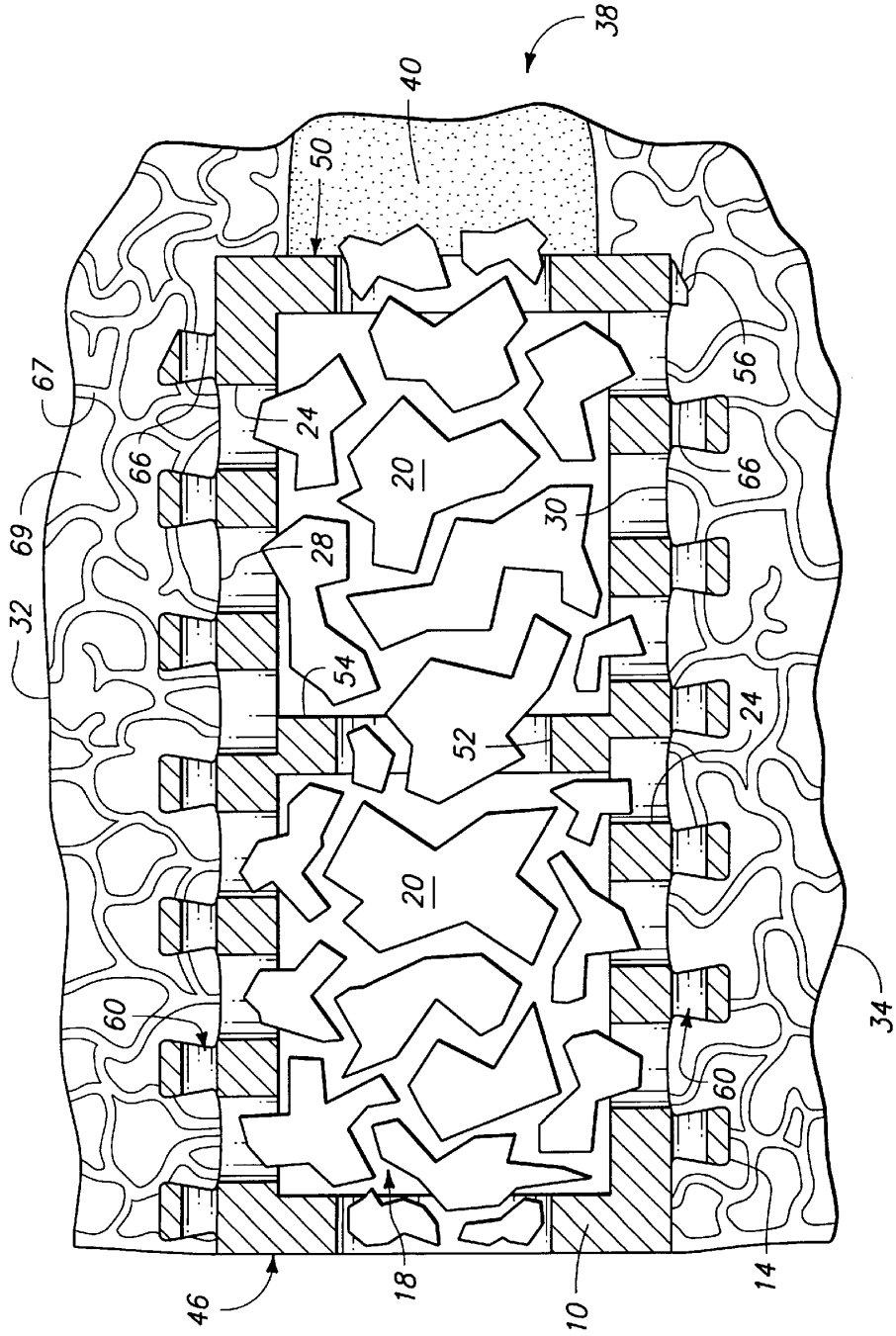

FIG 11

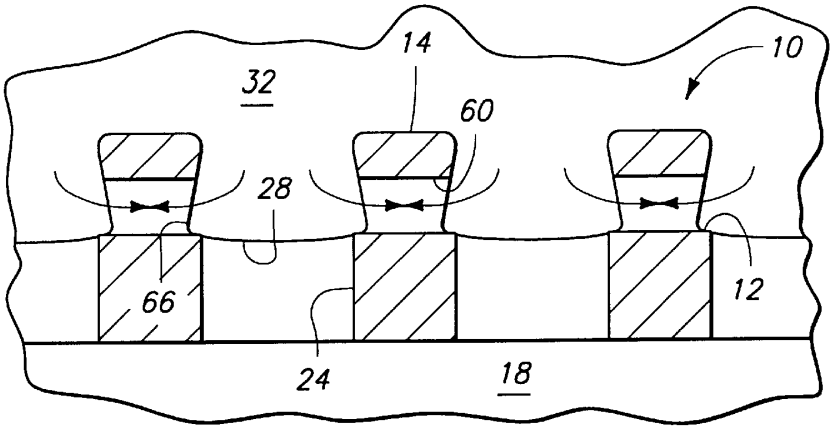

Fig 7

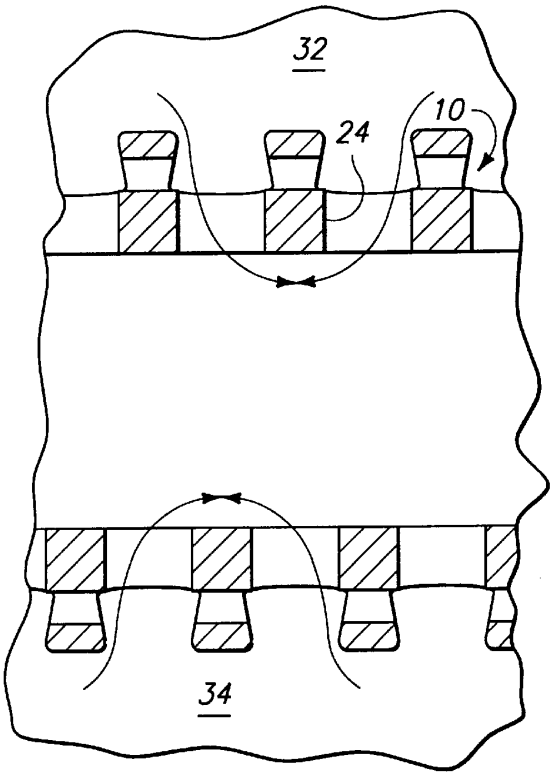

Fig 8

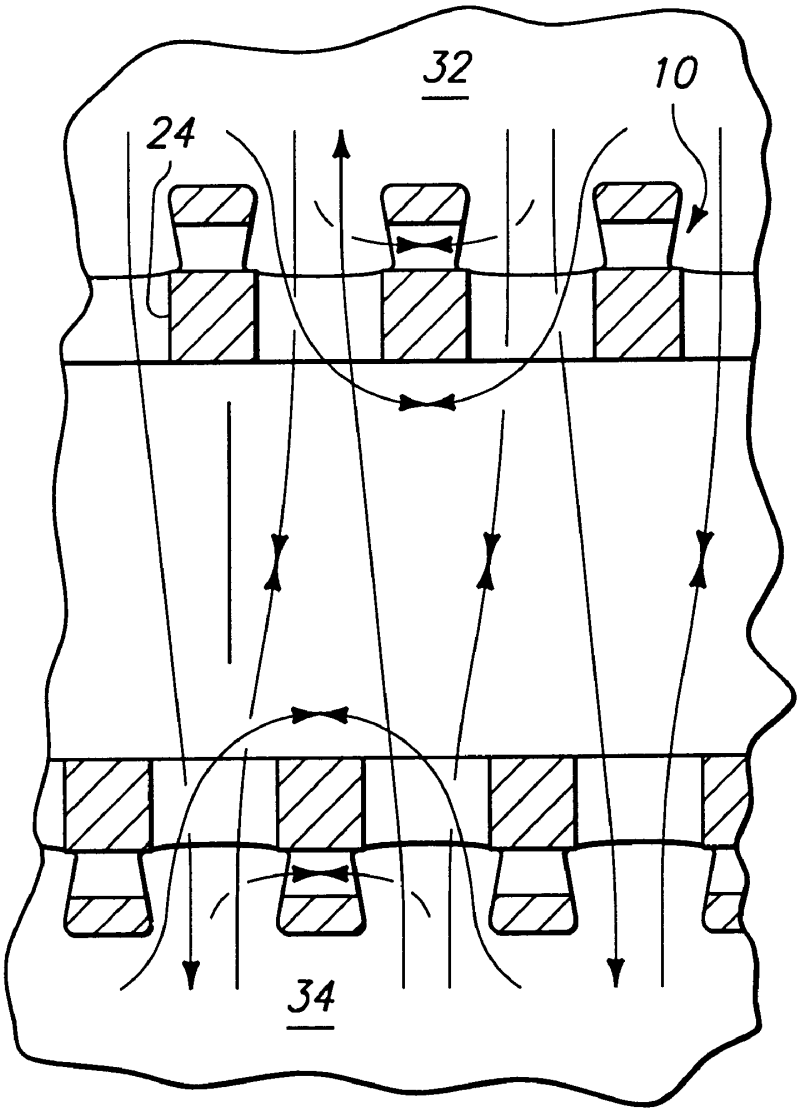

Fig 9

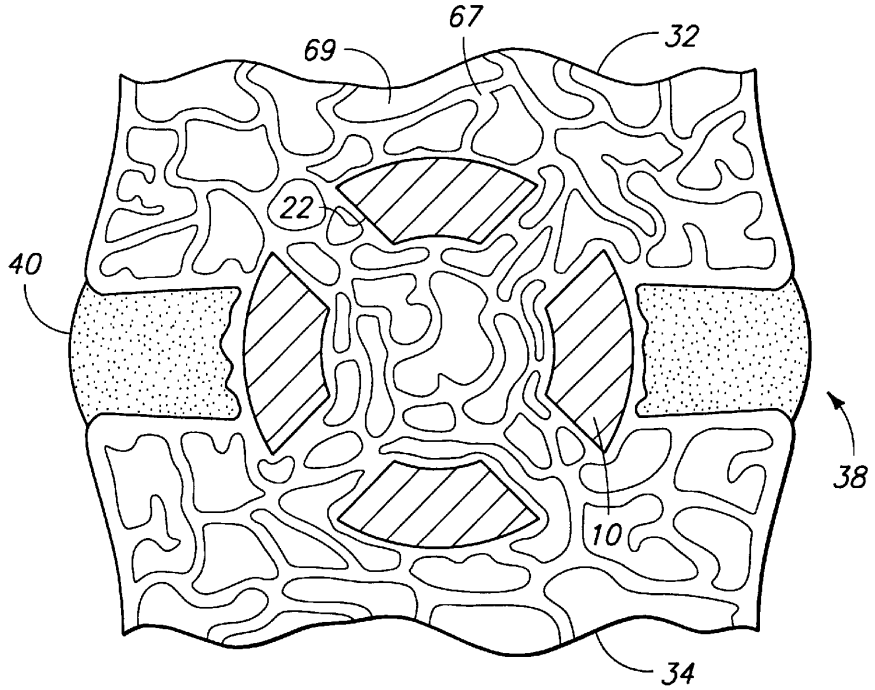

Fig 10

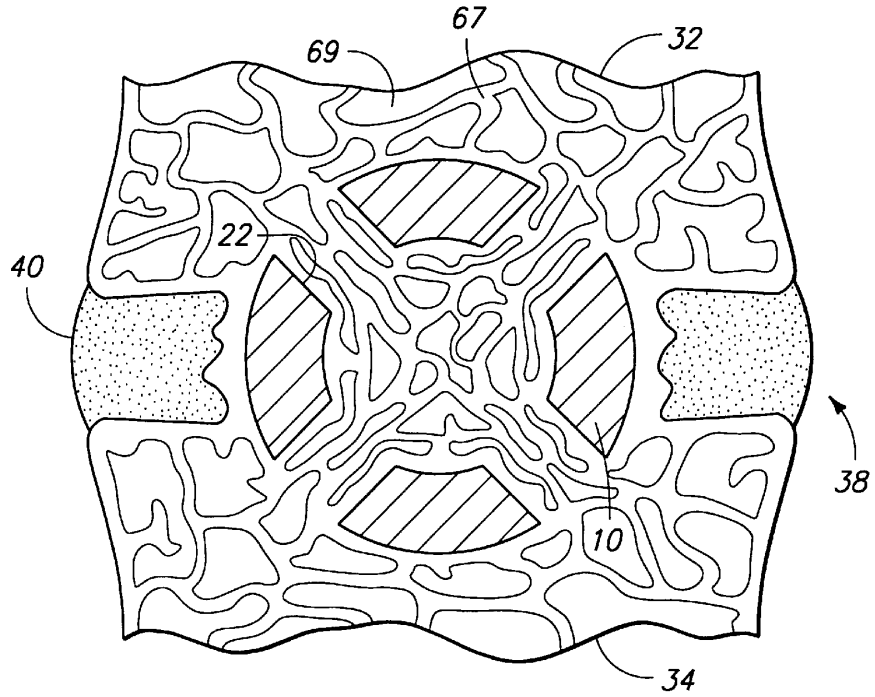

Fig 11

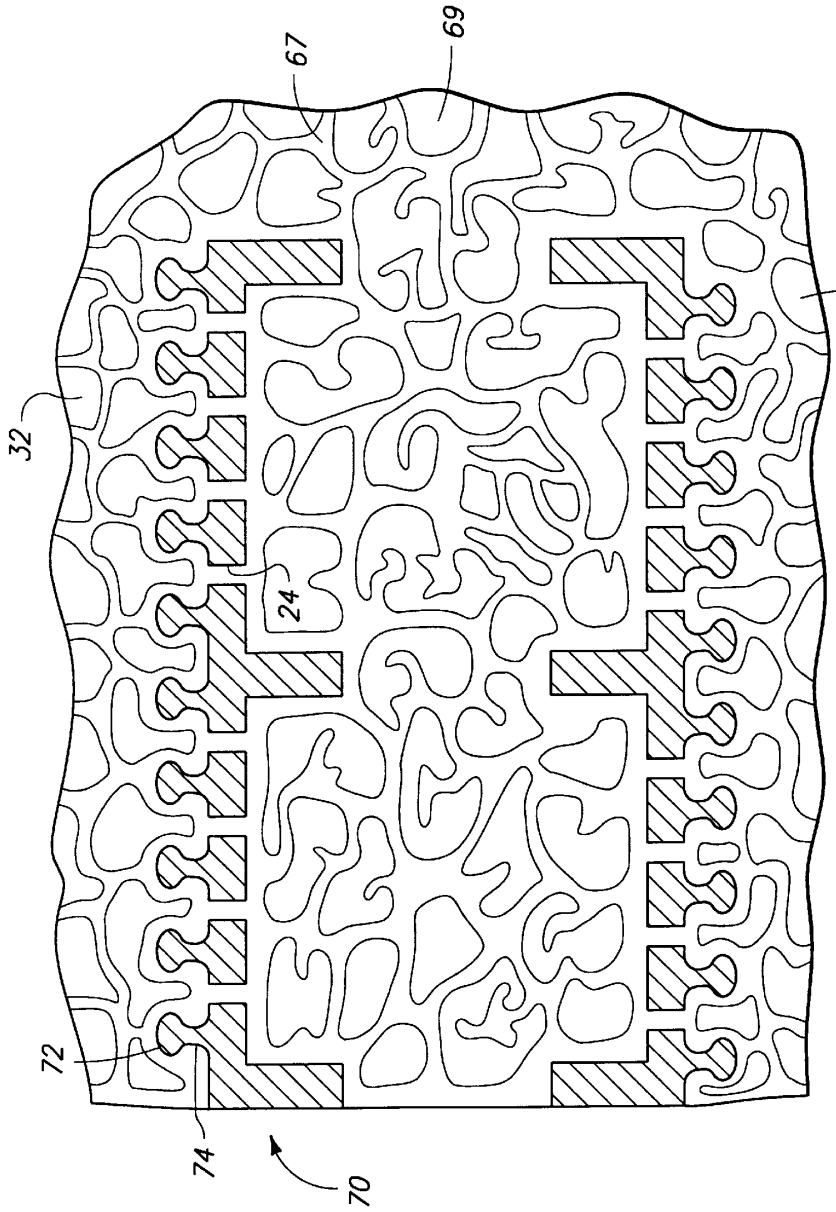

FIG. 11

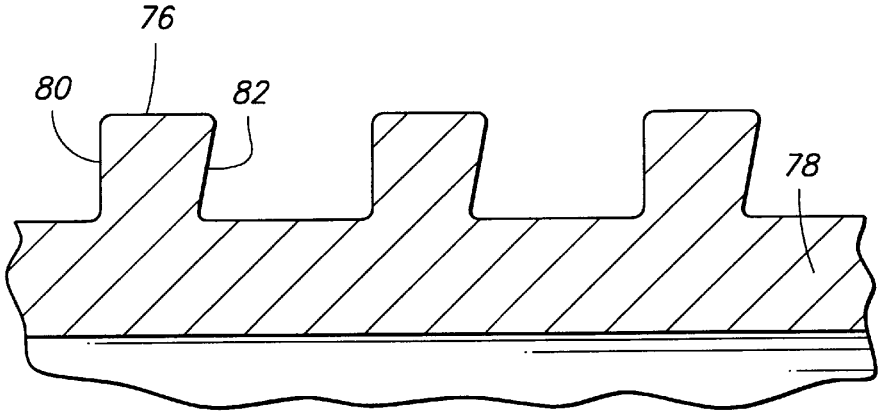

Fig 13

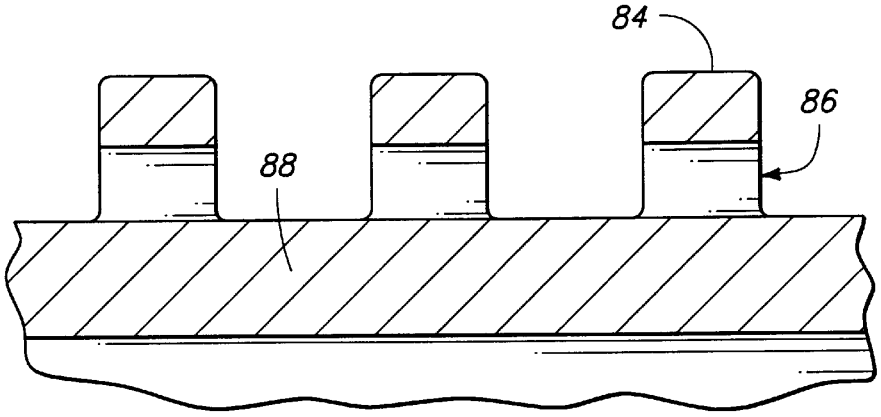

Fig 14

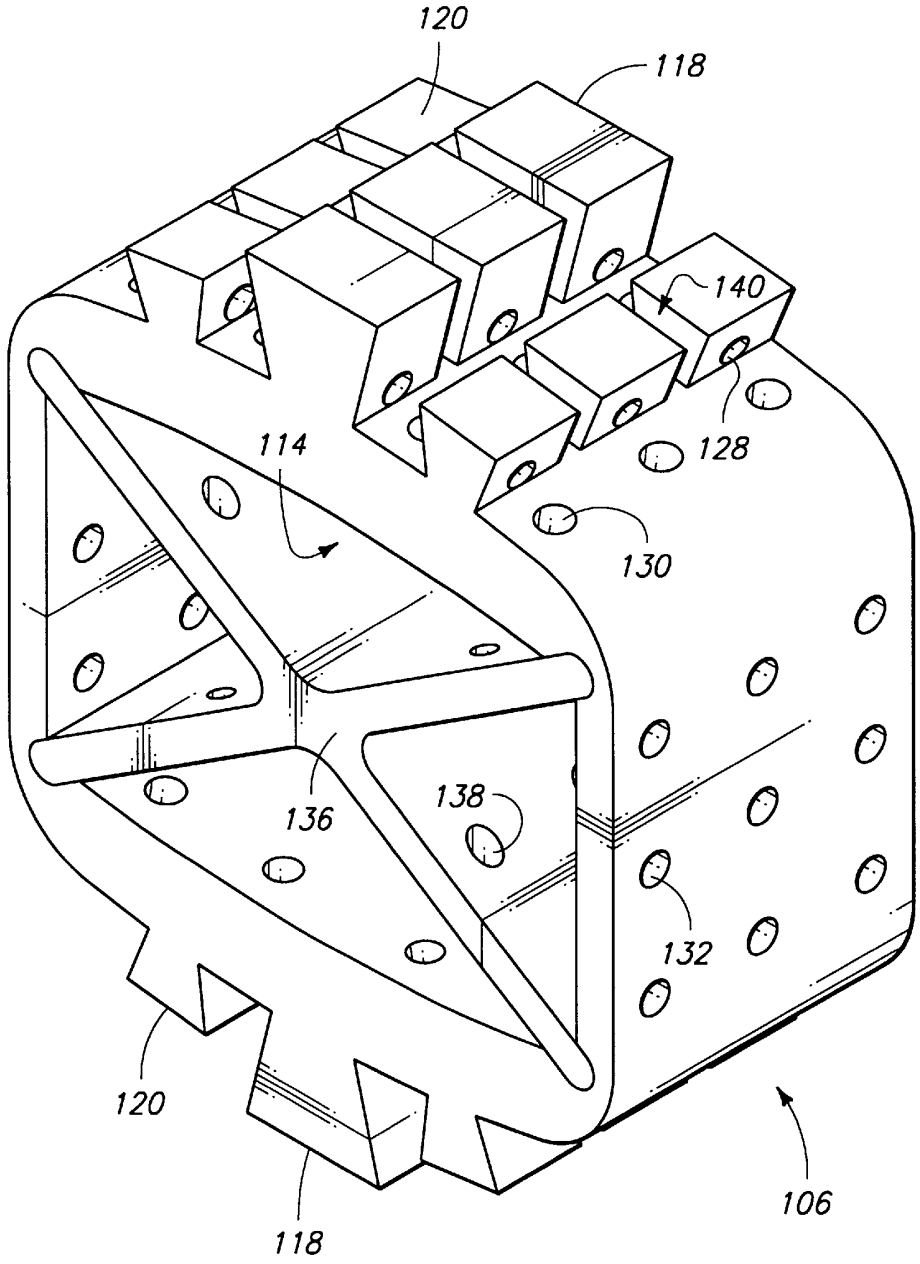

Fig 15

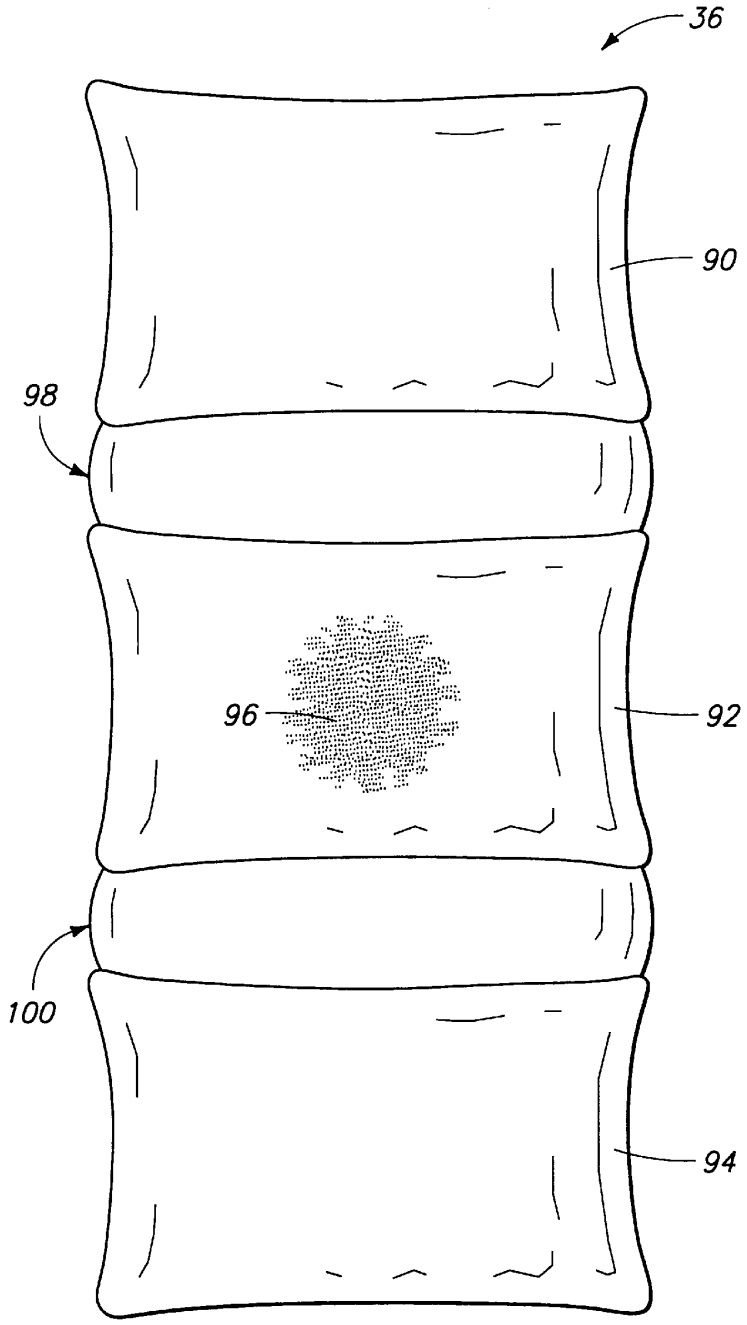

Fig 16

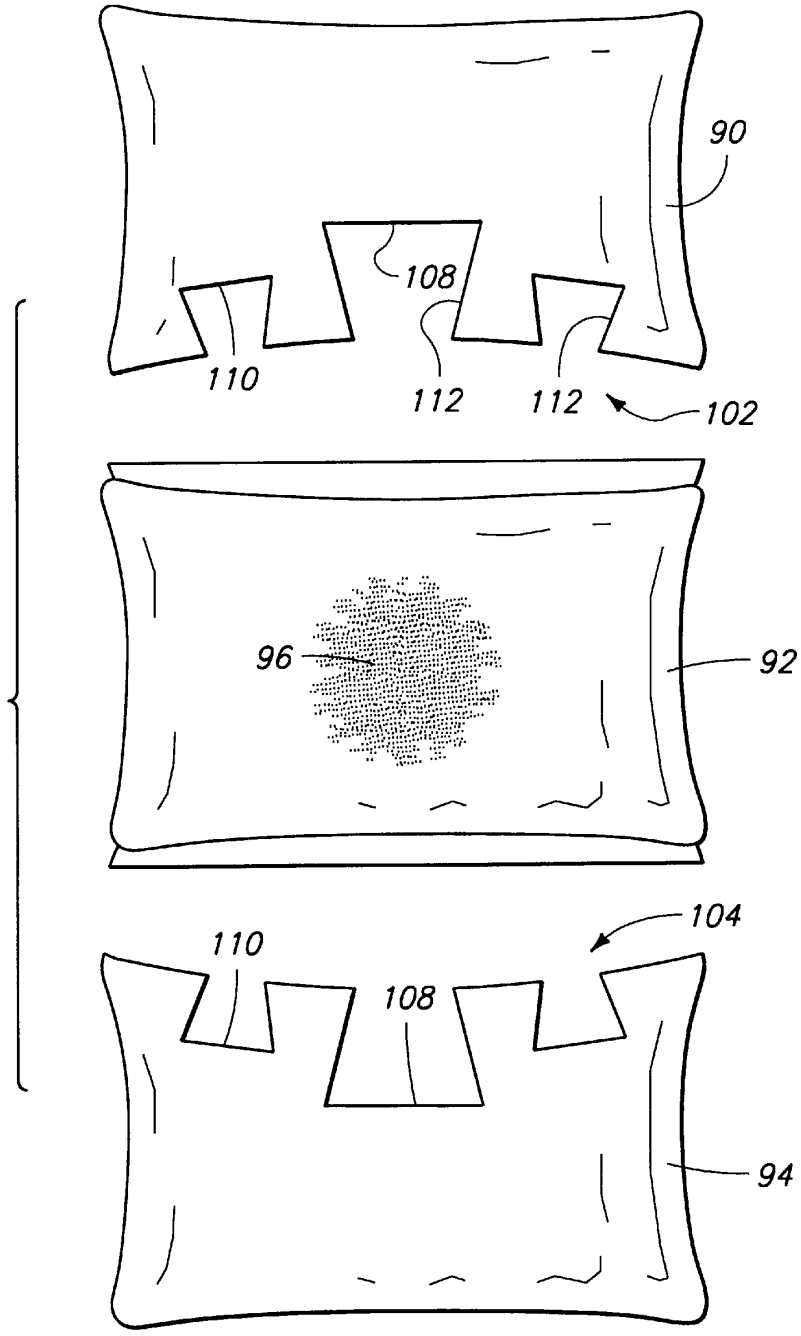

Fig 11

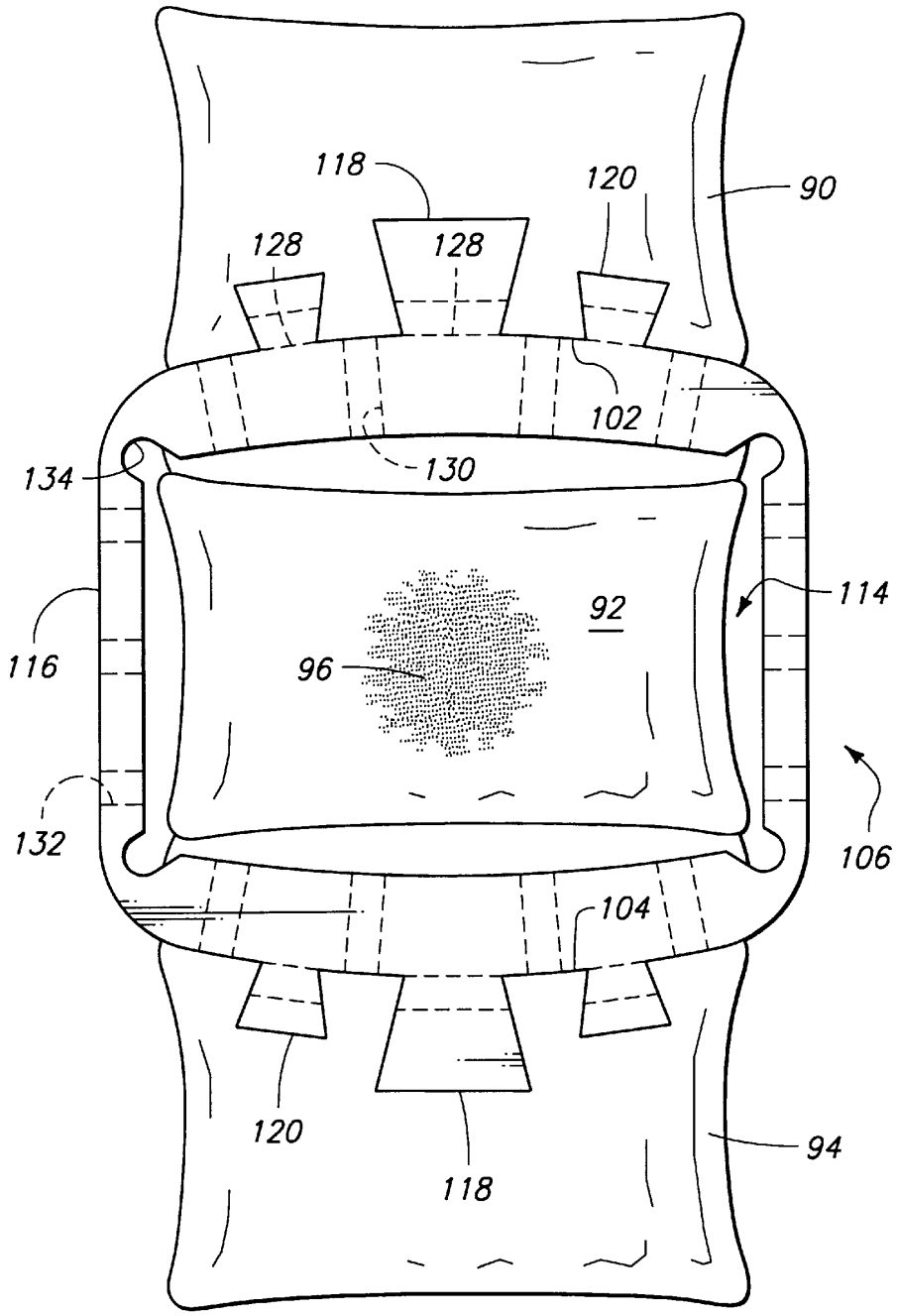
118
120
90
128
128
102
130
134
114
92
116
96
132
106
104
120
94
118

Fig 11B

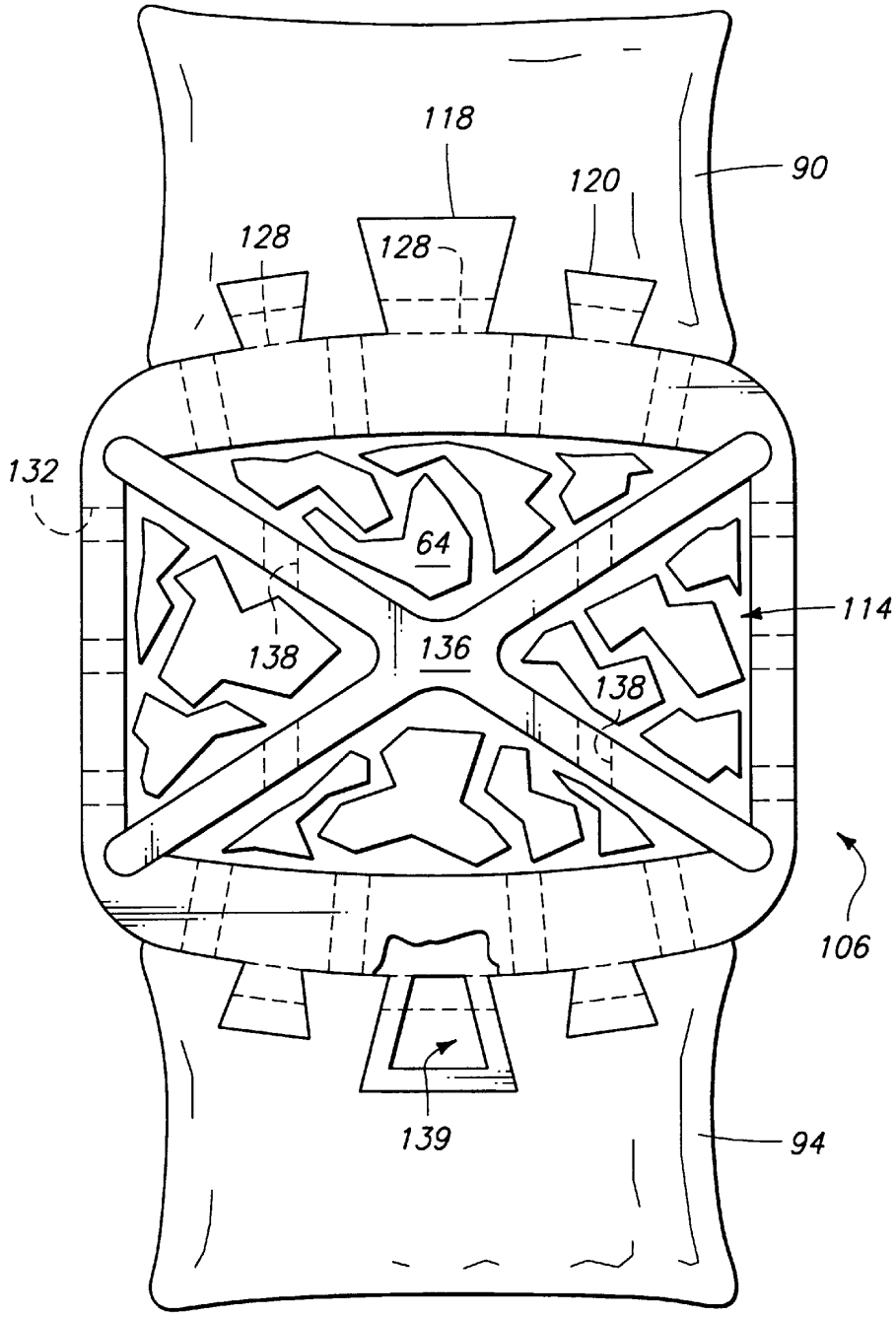

Fig 19

METHOD AND APPARATUS FOR CONJOINING BONE BODIES

RELATED PATENT DATA

This patent resulted from a continuation application of U.S. patent application Ser. No. 08/577,143, filed on Dec. 19, 1995, entitled "Interbody Bone Implant Having Conjoining Stabilization Features for Bony Fusion" now U.S. Pat. No. 5,709,683.

TECHNICAL FIELD

This disclosure relates to surgical joining of bone bodies, and more particularly to instant fixation and staged bone fusion of bone bodies, such as spinal vertebrae.

BACKGROUND OF THE INVENTION

Although the immediate effort leading to this disclosure is directed toward the lumbar spine (anterior or posterior in approach), the described vertebral implants for immediate fixation and staged stabilization leading to arthrodesis (bone fusion) of bone bodies may be used in a bone fracture or osteotomy to fuse together resulting bone bodies, and across one or more joints or articulations. Furthermore, the implants may be used in the lumbar, thoracic and cervical spine.

To facilitate fusion and healing of fractured bones, it has long been known to utilize fixation plates and screws to hold together disunited bone bodies. Typically, the separate bone bodies are formed when a single bone fractures, requiring bone reunion. Plates are secured across a fracture region with screws, joining together the bone bodies. The plates hold the bone bodies together in proximate relation, facilitating bone growth and fusion there between. In this manner, the bone bodies are supported in close proximity, or in direct contact which facilitates fusion there between. For cases where it is impossible to fixture together bone bodies internally of a patient's skin, external fixation is used. For external fixation, threaded pins are rigidly secured into each bone body. The pins, which extend outwardly of a patient's skin, are fixtured together with an external fixation device, placing the bone bodies in adjacent proximate position to promote healing there between. However, this is not practical for certain joints such as joints formed between spinal vertebrae.

An early technique for achieving arthrodesis between adjacent bone bodies across a joint or articulation is the well known Cloward Technique for use in the human cervical spine. A solitary dowel of bone is tapped into place in a prepared circular bed that is smaller than the dowel of bone. The dowel acts as a wedge, distracting the surrounding soft tissues of the joint, and separating the bone bodies or vertebrae joined there along. The intervertebral disc substantially comprises the soft tissues of the joint. The dowel of bone is inserted, or wedged into place, providing its own stability by putting an annulus of the disc on stretch. Additionally, simple friction of the inserted dowel between adjacent vertebral bodies stabilizes axial dislocation. However, a second surgical procedure must be performed to extract or harvest the dowel of bone, substantially adding trauma to the procedure, increasing costs, as well as increasing the threat of infection to the patient. Alteratively, bank bone from human donors can be used, but bank bone is less osteogenic and may introduce infection, or even transmission of Acquired Immune Deficiency Syndrome (AIDS) or hepatitis. Furthermore, bone morphogenic protein, hydroxyapatite, or other bone stimulating material may be utilized. Additionally, there has been a need to ensure the implant remains axially secured which has lead to further developments.

As a step forward from the Cloward Technique, the Bagby metal dowel (U.S. Pat. No. 4,501,269) utilizes the same principle. A perforated cylindrical hollow implant is inserted between prepared surfaces across a vertebral joint. The inserted implant immediately stabilizes the joint by spreading the bony surfaces apart in wedged opposition to surrounding tissue. This initial stabilization is more substantial because a metal dowel, unlike a bone dowel, will not be absorbed or fatigue in use. Over time, fusion occurs through and around the implant which is filled with bone fragments. Use of the metal dowel eliminates the need for a second operation to harvest a dowel of bone. Bone fragments to be inserted in the implant are retrieved during preparation of the circular beds in each vertebra. Furthermore, such a metal implant avoids the disadvantage of having to use bone banks to obtain donor bone. The Bagby implant described in U.S. Pat. No. 4,501,269 has a smooth outer surface, interrupted only by numerous openings or fenestrations through which bone ingrowth and through growth can occur. Bone morsels or bone grafts are typically harvested when preparing the circular bed in each vertebra, after which they are placed into the fenestrated metal cylindrical implant. The Bagby implant is then driven or tapped into place in a manner similar to the placement of Cloward's Bone Dowel, which was solely directed for use in the cervical spine.

Improvements have also been made to "Cloward's Technique" wherein two dowel bone grafts are posteriorly inserted (Wiltberger's Technique) between adjacent lumbar vertebral bodies. Furthermore, threaded surfaces have been added to such bone grafts in order to keep the grafts in place (Otero-Vich German Application Number 3,505,567, published Jun. 5, 1986). More recently, a number of U.S. Patents have proposed combining the threaded features from threaded bone grafts with a metal implant, resulting in rigid threaded implant structures for placement between adjacent spinal vertebrae.

One threaded metal fusion implant disclosed in Michelson (U.S. Pat. No. 5,015,247) provides a cylindrical fusion implant having an outer diameter sized larger than the space between adjacent vertebrae to be fused. Threads provided on the exterior of the member engage the vertebrae to axially secure the implant there between. The implant has a plurality of openings configured along the cylindrical surface to promote bone ingrowth. However, the threads per se of the implant do not function as a fastener to fix together the adjacent vertebral bodies. Instead, the implant functions as a wedge, imparting a distraction force across the disc which stabilizes the articulation formed there between by stretching the annulus of the disc. In fact, the threaded implant relies solely on the annulus to provide stabilization between the vertebrae, in direct response to wedge-induced distraction created there between. Distraction of the annulus stabilizes the two vertebrae, enabling ingrowth to later occur within the implant. Therefore, through-growth and fusion (arthrodesis) occur between the adjacent vertebrae subsequent thereto depending on the immobilizing potential of an intact healthy annulus which may or may not be present. Therefore, there is a need to provide an implant that produces immediate fixation per se between bone bodies following insertion and independent of the annulus. Particularly for cases where the annulus structure is substantially or completely weakened or damaged at surgery of implantation, the wedge-effect of prior art threaded implants

will not produce any distraction forces across the annulus. Also, when the implant is used to arthrodese and change angulation, a healthy annulus cannot be totally corralled to be placed on stretch. As a result, there is no form of stabilization or fastening between bone bodies sufficient to enable the occurrence of arthrodesis there between when the annulus is weakened or inadequate.

Another threaded implant disclosed in Ray (U.S. Pat. No. 5,005,104) provides a threaded fusion cage that is configured to be implanted in close adjoining pairs between adjacent vertebral bodies. Threads of adjacent cages are configured in overlapping relation when they are implanted. However, the fusion cages function only as wedges, imparting distraction forces across the annulus. The distraction forces immediately stabilize the intervertebral articulation by stretching the annulus of the disc immediately after implantation. Over time, the adjacent vertebrae fuse together. However, where a stretched annulus does not provide sufficient stabilization, initial early bone growth is seriously hindered, if not completely prevented. Furthermore, a stretched annulus can still allow slight motion.

For bone fusion to occur with any of the above devices, the invasion of new delicate blood vessels from the adjacent healthy bone is necessary for the creation of new living interconnecting bone. Where complete stabilization does not occur instantaneously upon implantation, motion can disrupt the ingrowth of delicate blood vessels. Disruption of the vessels then restricts or even prevents bone healing there between. The same problem occurs with any of the above mentioned implant techniques, including the threaded techniques of Otero-Vich and Michelson. Even when the annulus is completely on stretch, the threads per se of these constructions do not function in the manner of conventional screws, extending through one object and into another. Namely, they do not function to fasten together adjacent bodies by coaction of the thread with each body. Alternatively, they do not fasten together bodies by action of the thread with one body, and action of a fastener head with the other body. Instead, the threads merely act as a series of ridges that engage with each adjacent bone body, while the implant body functions as a wedge. The implant distracts apart the vertebral bodies which stretches the annulus, and stabilizes the articulation as a consequence thereof, while the thread functions solely to prevent axial dislodgement.

A further area of prior art relates to implants having surface features that enable bony ingrowth to occur. For example, beads of titanium have been provided on the stems of hip implants to form such features. Ingrowth by a bone bed with the structural features occurs some time after implantation. Therefore, fixation is not immediately present as a result of the surface features, and some other fixation must be relied upon until ingrowth occurs. With the exception of the Cloward Bone Dowel and Otero-Vich, the above-mentioned vertebral body implant devices incorporate fenestrations or openings that tend to facilitate bony ingrowth into the metal spinal implants.

Additionally, Lin et al. (U.S. Pat. No. 4,778,469) teaches a surface construction of a space occupier having a pattern for tissue ingrowth in the surface of an implant. Tapered posts having undercuts are provided along a surface of a hip implant. Subsequent to implantation, physiological bone ingrowth occurs within the undercuts, helping to fix the implant within the bone. However, this construction does not enable immediate fixation via the undercuts. Instead, it relies upon physiological bone ingrowth which takes time to occur. Therefore, other mechanisms must be relied upon to maintain implant fixation within the bone prior to ingrowth. Such is also the case with the previously mentioned vertebral implants.

Therefore, there is a present need to provide implant devices that fasten bone bodies together directly upon implantation. There is also a need to provide such a device that facilitates staged stabilization, ultimately leading to bone fusion there between. The final stage of bone fusion through and around the implant substantially eliminates any need for the implant to maintain the fusion, thus allowing the bone union to provide primary support there between, i.e. the implant can be removed without reversing the arthrodesis in such cases as chronic infection. Furthermore, there is a need to provide such a device for fixing bone bodies together across an articulation or joint (arthrodesis). Particularly, this need exists where soft tissues of an articulation have deteriorated to such a condition that distraction across the articulation will not produce stability. For example, prior art devices (including the above-mentioned vertebral body implant devices) cannot stabilize an articulation by inducing a wedging apart, or stretching of an annulus where the annulus is weakened or absent. Therefore, interim stability cannot be imparted between adjacent vertebrae at the time of surgery. Such interim stability is needed for successful fusion. As a result, ingrowth and through growth needed to fuse the bone bodies together for long-term stability is less likely to occur on a routine basis.

BRIEF DESCRIPTION OF THE DRAWINGS

Preferred embodiments of the invention are described below with reference to the following accompanying drawings.

FIG. **1** is a perspective view of a vertebral structure showing a pair of vertebral interbody implants embodying this invention, one inserted and the other positioned for insertion. A solitary implant (not shown) may be used in certain cases;

FIG. **2** is a side elevational view illustrating the vertebral interbody implant of FIG. **1**;

FIG. **3** is a leading end view taken generally on line **3—3** of FIG. **2**;

FIG. **4** is a trailing end view taken generally on line **4—4** of FIG. **2**;

FIG. **5** is an unrolled plan view of the outer peripheral surface of the vertebral interbody implant of FIGS. **1–3**;

FIG. **6** is a cross sectional view taken generally on line **6—6** of FIG. **3** of the vertebral interbody implant immediately after implantation;

FIG. **7** is a fragmentary and enlarged cross-sectional view taken generally on line **7—7** of FIG. **5** and shows initial surface through growth diagrammatically;

FIG. **8** is a cross sectional view taken generally on line **8—8** of FIG. **4** of the vertebral interbody implant subsequent to implantation and illustrating bone ingrowth (diagrammatically) including the bone grafts with interlocking;

FIG. **9** is a cross sectional view corresponding to that of FIG. **8**, but taken later in time and illustrating advanced bone through-growth (diagrammatically) beyond surface growth and ingrowth of FIGS. **7** and **8**, and illustrates bone joining and connecting vertebrae;

FIG. **10** is a cross sectional view taken generally on line **10—10** of FIG. **2** illustrating bone through-growth at the same time as that depicted in FIG. **9**, but in histologic detail;

FIG. **11** is a cross sectional view corresponding to that of FIG. **10**, but taken later in time and illustrating bone remodelling;

FIG. **12** is a fragmentary and enlarged centerline sectional view depicting a vertebral interbody implant having an alternative undercut thread construction with bony through growth;

FIG. **13** is a fragmentary and enlarged centerline sectional view depicting a vertebral interbody implant having another alternative undercut thread construction;

FIG. **14** is a fragmentary and enlarged centerline sectional view depicting a vertebral interbody implant having a third alternative undercut thread construction;

FIG. **15** is a perspective view illustrating a bridging vertebral interbody implant embodying this invention for use in performing a corpectomy;

FIG. **16** is a front elevational view of a vertebral structure showing three vertebrae, with a midmost one having a visible cancerous or benign tumor;

FIG. **17** is a front elevational view of the vertebral structure of FIG. **16** depicting the cephalad and caudad vertebrae prepared to receive the alternatively constructed interbody implant of FIG. **15**;

FIG. **18** is a front elevational view of the vertebral structure of FIG. **17** after receiving the alternatively constructed interbody implant; and

FIG. **19** is a front elevational view of the device of FIGS. **15** and **18** after removal of the midmost vertebra, insertion of a medial cruciate baffle, and prior to closure of the surgical wound.

DETAILED DESCRIPTION OF THE PREFERRED EMBODIMENTS

This disclosure of the invention is submitted in furtherance of the constitutional purposes of the U.S. Patent Laws "to promote the progress of science and useful arts" (Article 1, Section 8).

In accordance with one aspect of the invention, a bone joining implant is engaged between a pair of bone bodies to be joined. The implant has a rigid, implantable base body with an outer surface having at least one bone bed engaging portion. The outer surface engages with a bone bed prepared in each bone body to be joined. One or more splines are provided by the bone bed engaging portion. The spline is constructed and arranged to extend outwardly of the implant body. Furthermore, the spline has an undercut portion configured to engage in interlocking relation with a bone bed provided in each of the bone bodies to be joined.

In accordance with another aspect of the invention, a vertebral interbody implant is engaged between a pair of adjacent vertebrae to be joined. The implant has a body sized to be received between a pair of adjacent vertebrae to be joined. The body forms an outer surface having at least one bone bed engaging portion configured to be engaged with a bone bed on each of a pair of vertebrae to be joined. At least one thread is formed by the bone bed engaging portion that extends radially outward of the body in a generally helical configuration. The thread is configured to engage in assembly with each adjacent vertebra. Furthermore, the thread has an undercut portion provided on a radial inner portion for engaging in interlocking relation with a bone bed in each vertebra. In assembly, the implant engages in interlocking relation with a pair of vertebrae joined there along.

In accordance with yet another aspect of the invention, a vertebral bridging implant is received about a vertebral body to be removed by a corpectomy. An implantable body on the implant has an inner dimension sized to be received about the vertebral body to be removed. An outer dimension on the body is sized to be received between a pair of vertebrae to be joined adjacent thereto. The body has an outer surface with a bone bed engaging portion configured to be engaged with bone beds on each vertebra to be joined. An undercut spline extends outwardly of the body, provided by the bone bed engaging portion. In assembly, the spline mates in interlocking engagement with the bone bed of each vertebra, joining the non-adjacent vertebrae in interlocking relation.

A preferred embodiment bone joining implant in accordance with the invention is first described with reference to FIGS. **1** through **11**. Such an implant is described further below with respect to a threaded vertebral interbody implant having an undercut thread portion. The undercut threaded implant is designated in FIGS. **1–11** generally with numeral **10**. A pair of implants **10** is depicted in this implementation. Alternatively, a single implant could be used. As shown in FIG. **1**, such comprises a rigid, cylindrical base body **12** having a helically configured spline or thread **14** configured on an outer surface **16** of body **12**. A central chamber **18** is formed within body **12** for receiving bone graft material **20** therein. Large and small fenestrations **22** and **24** extend through surface **16** into chamber **18** for facilitating bony ingrowth and through growth therethrough. Thread **14** has an undercut **26** which meshes in assembled engagement within bone beds **28** and **30** in vertebra **32** and **34**. Each bed **28** and **30** forms complementary female threads for receiving the undercut thread in interlocking engagement there along. For purposes of this disclosure, a spline shall include any thread, web, strip, ridge, or portion of material formed from continuous material, or broken into fragments (interrupted).

As shown in FIG. **1**, vertebrae **32** and **34** comprise neighboring bone bodies of a vertebral column **36**. A resilient articulation **38** or joint is formed between vertebra **32** and **34** by a disc **40** extending there between. Anatomically, the disc is made up of a central nucleus pulposus and an outer encircling annulus. The annulus and nucleus pulposus are composed of laminae of fibrous tissue and fibrocartilage. The nucleus pulposus, located at the center of the disc, comprises a soft, pulpy, highly elastic substance. The annulus is formed from laminae of fibrous tissue extending in crisscrossing fashion to encircle the nucleus pulposus. Additionally, the intervertebral disc is adherent, by its cephalad and caudad surfaces, to a thin layer of hyaline cartilage that covers the top and bottom surfaces of adjacent vertebrae. In a healthy patient, adjacent vertebra **32** and **34** are spaced apart by the disc **40**. However, degenerative disc disease and localized trauma can cause degradation or complete loss of the soft tissue components between neighboring vertebrae. For example, the annulus can partially or completely tear which can seriously degrade the structural condition of the articulation. Additionally, fluid can escape from the nucleus pulposus. When any of the above happens, vertebrae **32** and **34**, loaded by the normal weight bearing of a patient, are pressed into closer adjoining positions, which can result in pinching of nerves that extend from between vertebrae of the spinal column (not shown).

Therefore, there is a need to recover the disc spacing provided by a normal healthy disc **40** by way of inserting implants **10**. Furthermore, there is a need to provide implants **10** with a fixation that instantly interlocks adjacent vertebra **32** and **34** together upon being implanted. Furthermore, there is a need for such an implant **10** that facilitates staged stabilization resulting in arthrodesis to occur between the vertebral bodies, following initial implantation.

As a result, implant **10** can be inserted, preferably in left and right laterally positioned pairs, between adjacent verte-

brae of patients who have bad, ruptured or degenerative discs. A solitary implant may also be used in chosen cases. For example, the implant can be axially oriented anterior to posterior, or even laterally. In summary, implants **10** are adapted for implantation between prepared bony surfaces or beds **28** and **30** of articulation **38**. A typical implantation might involve placement of one or more implants **10** as required in order to stabilize and fix the joint during bone ingrowth and through-growth of the implant structure. Bone growth is also accomplished outside of and surrounding the implant.

Preparation of bone beds **28** and **30** is performed according to well known techniques in the art, with the exception that presently available tapping devices are modified according to one implementation of this invention. During a surgical procedure, a prepared and exposed vertebral column **36** receives a hollow guide tube (not shown) having teeth at its lower end. The tube (or sleeve) is mated with its lower end engaging across articulation **38**, wherein the teeth engage vertebrae **32** and **34**. A drill (not shown) is then guided down the tube in order to drill a pilot hole between the vertebrae, imparting the general cutout configuration to beds **28** and **30**. Subsequently, a preliminary tapping device is received through the tube into the pilot hole where female threads of rectangular cross section are cut into beds **28** and **30**. The female threads are undersized in width, requiring further self-tapping by the implant during insertion. Alternatively, the tapping device can be configured to cut female threads having an undercut cross section sized and configured to conform with the undercut threads **14** on implant **10**. For the case where threads are cut with a rectangular cross section, implant **10** has self-tapping features provided by thread **14**. The self-tapping features enlarge the radial outermost portion of each complementary corresponding female thread provided by beds **28** and **30**, respectively.

An additional benefit is provided when implant **10** is self-tapped into an undersized female thread in each bone bed **28** and **30**. Namely, in practice it proves difficult to maintain precise spaced apart positioning of vertebrae **32** and **34** following drilling of beds **28** and **30**. Therefore, even slight variations in spacing produce a misfit between the outer surface of implant **10** and each bed **28** and **30**. However, where implant **10** has self-tapping features, the self-tapping mitigates any slight misfit condition by at least partially reforming the beds **28** and **30** during insertion. Furthermore, a laterally positioned pair of implants proves difficult to implant with a perfect fit up between the implants and the bone beds. Typically, a first site is prepared and one implant is inserted, after which a second site is prepared and a second implant is inserted. However, the bone beds at each site tend to shift as each implant is inserted since the pair of implants are not inserted simultaneously.

FIG. **2** illustrates undercut threaded implant **10** in a side elevational view corresponding to a preferred rotationally positioned and implanted configuration within a patient. Large fenestrations **22** are formed along a pair of perpendicular axes that substantially bisect vertical and horizontal planes of a patient receiving the implant. Large fenestrations **22** are sized and located to allow for reorganization or hardening of bone by maturity after initial bone healing. FIG. **3** clearly illustrates such a configuration. In this manner, top most or cephalad and bottom most or caudad portions of implant **10** present an outer surface that is void of any large openings or fenestrations. Such a surface substantially enhances load bearing there along, following implantation. However, such placement of large fenestrations **22** still provides a significant path for subsequent ingrowth and through growth between adjacent vertebral bodies receiving implant **10**. Additionally, small fenestrations **24** provide paths for ingrowth and through growth. Furthermore, the above-described orientation and size of fenestrations **22** is well suited for staged fusion and subsequent bone remodelling, leading to structurally enhanced fusion between vertebrae **32** and **34**.

Implant **10** of FIG. **2** is depicted with a plastic end cap **42** that mounts in engagement with an opening **44** formed in a trailing end **46** (as shown in FIG. **4**). End cap **42** is optionally mounted to implant **10** when performing a bilateral implantation by way of a posterior approach. Such a posterior surgical approach presents a special concern; namely, that the dura of the spinal cord might rub against the driving or trailing end **46** of implant **10**. Therefore, end cap **42** is secured in opening **44** to protect the spinal cord, following implantation of implant **10** and the inserted bone graph material therein.

Additionally, small fenestrations **24** are formed in implant **10**. The small fenestrations **24** extend substantially throughout the walls of the cylindrical implant. Small fenestrations **24** offer avenues of ingrowth of bone between vertebrae **32** and **34**, which is stimulated by bone graft material placed within central chamber **18** during implantation. In this manner, fenestrations **24** serve to facilitate earlier and more thorough ingrowth of bone within implant **10**. Furthermore, fenestrations **24** enhance overall through growth of bone through implant **10**.

Large fenestrations **22** are preferably sized and configured to interrupt no more than one complete width of thread **14**. Hence, the total amount of interlocking of undercut thread **14** with bone beds **28** and **30** is optimized. According to this construction, fenestration **22** extends substantially between a first and a third adjacent portion of helically wound thread **14**, while interrupting a second, or middle portion. A taper **56**, also provided along end **50** reduces the height of thread **14** substantially to a diameter of base body **12**, immediately adjacent leading end **50**. Placement of fenestrations **22** in close proximity with leading end **50** tends to interrupt thread **14**, at least partially providing a self-tapping feature there along. Furthermore, fenestrations **22** allow for self depositing of bone chips during the self tapping process of implant **10**. Bone chips are delivered into the large and small fenestrations **22** and **24**, as well as into central chamber **18** during self tapping of the implant. Such bone chips supplement bone graft material **20** that is packed into the implant, which together encourage the early process of arthrodesis. These delivered bone chips produced in self tapping remain alive since they never leave the patient's body. Therefore, they tend to be more osteogenic than if they were nonviable.

As shown in FIG. **2**, fenestrations **22** only partially provide for complete self-tapping. Therefore, cut-out portions **58** are also formed along thread **14** in order to add further self-tapping features. Additionally, thread **14** within the region of taper **56** also forms an undercut **26** so that progressive formation of complementary corresponding undercut female threads can be formed within bone beds of adjacent vertebrae receiving the implant.

Alternatively, fenestrations **22** can be provided immediately adjacent to leading end **50**, eliminating the need for cut-out portions **58** altogether when providing self-tapping features on implant **10**. For cases where female threads **66** are preformed into beds **28** and **30** with undercut, there is little or no apparent need for such self tapping features. In such cases, fenestrations **22** can be placed anywhere along

implant **10**, and cut-out portions **58** (FIG. **5**) can be eliminated (i.e. no other self-tapping needed).

Referring to FIG. **3**, leading or advancing end **50** of implant **10** is clearly shown. Cut-out portions **58** can be clearly seen in this view. Additionally, taper **56** progressively decreases the height of thread **14** as it extends helically toward leading end **50**, until it merges into base body **12**. Furthermore, a plurality of axially extending through holes **60** cut through thread **14** is clearly shown. Through holes **60** facilitate early stage ingrowth of bone with implant **10** following implantation. As shown in FIG. **3**, through holes **60** are also formed in thread **14** in the region of taper **56**, thereby interrupting thread **14** in the region of taper **56** so as to impart even further self-tapping features there along. Alternatively, through holes **60** can be omitted in the region of taper **56**.

Opening **48** in leading end **50** is sized smaller in diameter than an inner wall **62** of the implant base body **12**, as shown in FIG. **3**. In this manner, a structure enforcing bulkhead is provided at the leading end. Additionally, a similar centrally positioned bulkhead **54** is also provided intermediate of the advancing and driving ends **50** and **46**, respectively, within central chamber **18**. Central bulkhead **54** has an oval slot **52** extending completely therethrough for mating with a fingered end of a driver (not shown). The slot mates with the finger, allowing torquing of threaded implant **10** into the bony beds of adjacent vertebrae. Typically, such a driver construction is required in order to impart large forces necessary to insert implant **10** into the lumbar region of a patient's spine. Alternatively, a driver can be configured to mate with trailing end **46** via a plurality of dowels on the driver. The dowels are received in complementary corresponding receiving holes (not shown) of the implant there along. Such a construction is well suited to an implant that is sized to be received also in the cervical region of the spine where less torque is required to insert implant **10** therein.

A further alternative construction calls for formation of an oval slot (similar to slot **52** of FIGS. **3** and **4**) in place of opening **44** in trailing end **46**. Provision of the slot in the trailing end will enable driver engagement suitable to insert as well as remove the implant. Hence, the same tool can be used to remove the implant. Furthermore, the leading end can have a similar slot, allowing for surgical removal of an implant where a posteriorly inserted implant needs to be removed from the anterior for surgical reasons.

As shown in FIGS. **3** and **4**, axially extending through holes **60** are provided in implant **10** in locations that correspond with the vertical and horizontal planes of a patient receiving the implant. Additional through holes **60** are provided between the holes positioned along the vertical and horizontal planes, enabling further initial ingrowth there along. For holes **60** that are positioned in locations along the vertical and horizontal planes, such holes are provided adjacent small fenestrations **24** which further facilitates ingrowth and through growth there along.

As shown in FIG. **4**, trailing or driving end **46** has opening **44** which is sized similarly to opening **48** in leading end **50** (of FIG. **3**). In this manner, opening **44** is sized smaller than inner wall **62**, forming an enforcing flange from a portion of trailing end **46** extending there along. Additionally, FIG. **4** illustrates termination of undercut thread **14** along trailing end **46** of implant **10**. Preferably, axially extending through holes **60** are machined through the helically extending thread **14** progressively from the trailing end **46** toward the leading end **50**. In this manner, a drill bit received there along to cut holes **60** can be axially advanced, short of drilling through thread **14** in the region of taper **56** if such a construction is so desired.

According to FIG. **5**, outer surface **16** of implant **10** is shown in an unrolled plan view to better depict layout of thread **14**, fenestrations **22** and **24**, through hole **60**, and self-tapping cutout portions **58**. The particular layout leads to the various above described benefits. Various alternative layouts can be readily envisioned for thread **14**, fenestrations **22** and **24**, through hole **60** and self-tapping cutout portions **58**, and fall within the claimed subject matter of this invention. Additionally, any one or more of such features can be eliminated, with the exception of an undercut spline, or thread, yet still remain within the claimed scope of this invention.

FIG. **6** depicts implant **10** of FIGS. **1** through **5** immediately after implantation within prepared bone beds **28** and **30** of vertebrae **32** and **34**, respectively. According to the depicted implantation of FIG. **1**, bone beds **28** and **30** are prepared by forming female threads **66** therein, prior to receiving implant **10**. Subsequently, implant **10** is inserted by threading it into the beds with a driver.

As shown in FIG. **6**, a bore **68** is cut into vertebrae **32** and **34** (partially shown) by progressively enlarging the bore with a series of reamers received through a hollow guide tube (not shown). Subsequently, a tap is inserted through the guide tube to cut thread **66** into each vertebrae **32** and **34**. In the embodiment of FIG. **6**, female threads **66** are cut to have a square cross-sectional configuration, after which the self cutting features of thread **14** enlarge the square female threads during insertion of the implant. Hence, complementary corresponding undercut female threads **66** are formed that are configured to receive undercut thread **14** in snug and interlocking engagement there along. By pretapping a square (or some other closely configured) thread into the bone bodies, the self tapping implant **10** can complete the tap, which interlocks the implant with each bone body. In this manner, implant **10** when inserted, interlocks vertebrae **32** and **34** together immediately upon implantation, instantly stabilizing articulation **38**. Subsequently, bone ingrowth and through growth occurs via through hole **60** and fenestrations **22** and **24**, by way of enhanced development via bone grafts **20** packed into central chamber **18**. Therefore, with such a construction, the prior art reliance on a wedging effect to stretch disc annulus **40** in order to stabilize the joint until bone fusion occurs there between is eliminated. However, it is still desirable to prepare beds **28** and **30** such that distraction occurs across disc **40**, further stabilizing articulation **38** there between. Additionally, a bone distractor can also be used during preparation of bone beds and implant insertion to pull apart the vertebrae, putting the disc annulus on stretch in the final implanted configuration.

Implant **10** according to the construction of FIGS. **1-5** facilitates staged stabilization and a bone fusion between vertebrae **32** and **34**. FIG. **6** illustrates the first stage of stabilization across articulation **40**, wherein undercut thread **14** interlocks in female threads **66** of each vertebra, imparting instant fixation and frictional stabilization there between. Furthermore, annulus **40** further cooperates with the implant to control distraction. A second stage of stabilization is depicted in FIG. **7**, wherein new bone from the living female bone threads **66** through grows into through hole **60**. A third stage of stabilization is depicted in FIG. **7**, wherein bone growing through small fenestrations **24** enjoins with bone growing from the same vertebra through an adjacent fenestration, and can further incorporate a portion of bone raft material contained within the implant. Furthermore, such ingrowth can occur through large fenestrations (not

shown). A fourth stage of stabilization is depicted in FIGS. **9** and **10**, wherein initial bone growth occurs through the implant, connecting vertebrae **32** and **34**. Such a condition forms an initial bone fusion. A fifth and final stage of fusion is depicted in FIGS. **11** and **12**, wherein the fused bone of FIG. **11** has reorganized according to Wolff's law. The trabeculae relocate through large fenestrations **22** to form a mature strengthening of the trabeculae. Additional reorganization can be facilitated outside of the implant by providing bone graft material thereabout at the time of implantation. Such a staged stabilization enables instant fixation between vertebrae **32** and **34**, after which the articulation **38** is stabilized and stress protected by shifting load-bearing from the implant to newly formed and reorganized bone occurring there between. For cases where staged stabilization and bone fusion is not allowed to occur, stress protection osteopenia can result from normal physiologic stress through the bone being removed via the implant, which can cause localized osteoporosis.

FIG. **7** is a fragmentary and enlarged cross-sectional view taken generally on line **7**—**7** of FIG. **5** illustrating an initial stage of bone ingrowth with arrows. Bone ingrowth occurs early on through axially extending through holes **60** due to their short length and proximity to healthy developed bone in living beds **28** and **30**. Since holes **60** are cut in thread **14** immediately adjacent base body **12**, holes **60** are shallow, and bone growth from living bone beds **28** and **30** need only progress a short distance in order to extend completely through holes **60**. Therefore, early through growth can occur through holes **60**, which further fixes and stabilizes implant **10** to vertebrae **32** and **34**. Such early ingrowth within holes **60** provides fixation above and beyond that provided by the interlocking fit of undercut thread **14** within female threads **66**. Additionally, through growth of bone into holes **60** prevents any loosening or "unscrewing" of implant **10** from within female threads **66** of beds **28** and **30**. Holes **60** impart a cotter-pin effect, locking implant **10** within threaded beds **28** and **30**. A typical time for complete through growth of holes **60** in an active and healthy patient ranges from about two weeks to four weeks.

FIG. **8** schematically depicts a cross-sectional view of implant **10** taken generally on line **8**—**8** of FIG. **4**. The arrows of FIG. **8** schematically represent bone ingrowth in the form of arrows that occurs through adjacent fenestrations **24** by way of the same vertebral body **32** or **34**. The ingrowth through fenestrations **24** of FIG. **8** occurs somewhat later in time than the ingrowth through holes **60** of FIG. **7**. The typical time for through growth is from one month to 3 months. Ingrowth by way of fenestrations **24** further ensures fixation of implant **10** to vertebrae **32** along a top portion, and to vertebrae **34** along a bottom portion. At this stage of stabilization, implant **10** still holds vertebrae **32** and **34** together in structural relation. Furthermore, the ingrowth depicted in fenestrations **24** in FIG. **8** also occurs through fenestrations **22** (not depicted).

FIG. **9**, taken later in time than FIGS. **7** and **8**, depicts complete through growth (arthrodesis) of implant **10** by healing bone following earlier ingrowth. According to FIG. **9**, a simplified and somewhat schematic cross-sectional configuration shows large fenestrations **22** and omits small fenestrations **24** for clarity. Furthermore, through growth is depicted in the form of arrows extending between vertebra **32**, along a top portion, and vertebra **34**, along a bottom portion. At this stage of bone fusion, bone graft material **20** that was initially placed in chamber **18** has fused with healing bone from vertebrae **32** and **34**. The fused bone provides a continuous path of structural bone there between. Furthermore, an additional pathway of bone not depicted in FIGS. **7**–**9** is bone growth outside of and around the implant. Such an initial bone fusion tends to have a somewhat random or directionally uniform bone cell orientation. The bone cells lack any optimized or reorganized structural orientation there through, other than that dictated by passageways that originally allowed for the bone growth. As shown in FIGS. **9** and **10**, the general characteristics of such initial bone fusion lacks any substantial reorganization. Hence, bone cell geometry has not been structurally oriented to optimize structural loading.

FIG. **10** depicts histologic bone cell geometry in greater detail, corresponding in time to that depicted in FIG. **9**. Lacunae and canals **7** or voids **69** are formed between the bone **67**. The lacunae represent the voids between the bone where soft tissue, blood vessels, and fatty deposits reside.

According to FIG. **11**, reorganization of fused bone material through implant **10** is shown generally occurring between vertebrae **32** and **34**. The fused bone consists of bone ingrowth and through growth of holes **60**, fenestrations **22** and **24**, and openings **44** and **48**. According to this simplified schematic representation depicting fenestrations **22**, the bone cells of FIG. **11** have remodeled so as to optimize the substantially vertical loading. Such loading represents the vertical weight bearing that a patient will impart on the implant system as surgically placed in the configuration of FIGS. **10** and **11**. In such a manner, bone cells have remodeled to form a definite elongated configuration extending between vertebrae **32** and **34** through fenestrations **22**. Such remodelled bone through growth can be seen between fenestrations on same sides of a patient, occurring from cephalad to caudad, as well as between fenestrations along a diagonal configuration of the patient, from cephalad to caudad. The large fenestrations **22** allow nature (by Wolff's law) to locate and strengthen large trabeculae. The latter also occurs around the outside of the implant between the vertebrae, as shown in FIGS. **10** and **11**.

FIG. **12** depicts an alternatively constructed bone joining implant **70** implanted between vertebrae **32** and **34**, but in a totally fused together and remodelled bone configuration. Such a final state of fusion transfers loading through the remodelled bone resulting from arthrodesis and remodelling. Hence, the need for implant **70** to carry load is greatly diminished, or even eliminated. In some cases, the implant can be subsequently removed where arthrodesis has occurred along the outside of the implant without reversing the bone fusion. According to FIG. **12**, bone union can be clearly seen around the outside of the implant.

Implant **70** of FIG. **12** has a modified form of thread **72** having an undercut **74** formed by enlarging the radial outermost portion of thread **72**. Alternatively, a bead having a cylindrical, oval, or semi-circular cross-sectional configuration can be affixed to the base to form thread **72**. Fenestrations **24** are also depicted on implant **70**. Additionally, large fenestrations **22** (not shown) substantially similar to those depicted in the device of FIGS. **1** through **11** are also present.

FIG. **13** is a fragmentary and enlarged center line sectional view of a further alternative construction for a thread **76** on implants **78** substantially similar to that depicted in FIGS. **1** through **11**. However, thread **76** is constructed to have a substantially vertical first face **80** and a substantially undercut second face **82**. When implanted, faces **80** and **82** cooperate to engage in interlocking relation with a complementary corresponding female receiving thread. Upon implantation of the device, the resulting undercut thread

construction is trapped in the female receiving thread. The construction of FIG. **13** provides the benefits of undercut, while decreasing the cost of producing a thread having an undercut along both faces.

FIG. **14** is yet another alternative construction of a thread **84** having undercut features **86** on an implant **88**. Undercut **86** is provided by through holes substantially similar to through hole **60** of implant **10** pursuant to FIGS. **1** through **11**. However, the undercut **86** of FIG. **14** is less preferred since immediate fixation is difficult, if not impossible to impart immediately after implantation of implant **88** within a bone bed. One technique for enabling immediate fixation is to also provide bone cement, such as polymethyl methacrylate (PMMA) which is inserted into the prepared bed as well as into holes **86** so that immediate fixation can occur via undercut **86** with the bone bed upon implantation of implant **88** there along. Additionally, or alternatively, undercut **86** can take on the form of a localized, or discrete undercut, that extends into a base portion of thread **84** along only a discrete portion(s). Even furthermore, through holes **60** can alternatively extend between a side face of thread **84** and the radial outermost face of the thread. Such a configuration will provide for undercut fixation.

Alternatively, the thread constructions depicted in FIGS. **1–14** can be formed by any of a number of cross-sectional configurations of one or more splines extending from a base body, and having an undercut portion. Further examples would include a spline having a vertical first face and an opposite undercut face. The undercut can have a face that is flat, concave, convex or some combination thereof. Furthermore, the first face can be sloped, essentially the opposite of undercut, thinning the spline in locations away from the base body. However, a corresponding undercut must be provided on the second face, in order to ensure interlocking between the implant and a bone bed instantly upon fixation. Another alternative construction has a pair of threads extending about the implant. With such a dual thread construction, the threads start 180 degrees apart, such that cutting forces produced by self-tapping threads will substantially offset one another. Hence, a self-tapping implant will tend to rotate into a pilot hole in a balanced manner, tending to follow the pilot hole. Furthermore, the balanced forces lead to a compact and stable implant that is more readily implanted in close relation with a solid bone bed. Such a relation enhances osteogenic effect, and allows a surgeon to deliver the implant on a long and thin driver. Hence, a smaller incision can be used to perform the surgery (via laparoscopy and thoroscope), resulting in much less trauma and less recovery time to a patient.

FIG. **15** illustrates a bone joining implant **106** suitable for use in performing a vertebral corpectomy. A corpectomy involves removal of a vertebral body from the posterior arch of a vertebra. Implant **106** has splines **118** and **120** configured on a top and bottom most outer surface for interlocking in bone beds of vertebrae adjacent to the vertebra to be removed. Implant **106** is first inserted into the bone beds of the vertebrae above and below the corpectomy after they are prepared. This option allows stabilizing the two healthy vertebrae **90** and **94** before removing the vertebral body of vertebra **92**. Otherwise, vertebra **92** would be dangerously destabilized. The implant has an open central receiving cavity **114** that envelopes the vertebra to be removed. Following implantation, the vertebra is removed, after which a reinforcing brace, or medial cruciate baffle **136** is mounted within implant **106** to strengthen the structural bridging resulting there between.

FIG. **16** illustrates a portion of vertebral column **36** wherein a middle vertebra **92** has a cancerous tumor **96**. Such a condition is a suitable candidate for a corpectomy, which requires complete removal of the vertebral body to extract cancerous tumor **96**, and removal of discs **98** and **100**. However, it is very difficult to perform such an operation without stabilizing the healthy vertebra first due to the tendency of surrounding muscles and soft tissue to compressively set the spine, driving vertebral bodies **90** and **94** closer together. The main body portion of vertebra **92** is removed, and a posterior portion forming the arch is left intact, thereby removing significant protection to the spinal cord and nerve structures. Therefore, it becomes necessary to maintain the positions of vertebrae **90** and **94** during removal of vertebra **92** until suitable implant material and/or implants can be inserted there between.

According to FIG. **17**, vertebrae **90** and **94** are cut to prepare bone beds **102** and **104** for receiving the bone bridging implant **106** (FIG. **16**) of this invention. Each of beds **102** and **104** is formed from a single, centrally located and axially extending undercut groove **108** and a pair of laterally positioned and axially extending smaller grooves **110**. Grooves **108** and **110** are preferably cut into vertebrae **90** and **94** with a saw or milling head, forming beds **102** and **104**, respectively. Undercuts **112** in each groove ensure interlocking of implant **106** as discussed below. Preferably, beds **102** and **104** are prepared while vertebra **92** is left in position.

According to FIG. **18**, implant **106** is inserted into interlocking and fixed relation with vertebrae **90** and **92**, along beds **102** and **104**. Subsequently, vertebra **92**, which is contained within the receiving cavity **114** of implant **106** is cut from the arch extending posteriorly there along, and removed from the implant.

Implant **106** of FIG. **18** has a hoop shaped somewhat-rectangular base body **116**, defining receiving cavity **114** therein. An elongated and axially extending large spline **118** and neighboring adjacently disposed small splines **120** are configured on a top most **122** and bottom most **124** face of body **116**. Splines **118** and **120** both have an undercut **126** constructed and arranged to engage in dove-tailed relation with undercut grooves **108** and **110** respectively. In this manner, implant **106** is mated in immediate fixed relation between vertebrae **90** and **94**, forming a structural bridge there between. Subsequently, the vertebral body of vertebra **92** is removed therefrom.

Implant **106** also has horizontally extending through holes **128** formed in each spline **118** and **120**. Additionally, vertically extending fenestrations **130**, as well as horizontally extending fenestrations **132** are provided in base body **116** for facilitating bony ingrowth and through growth there through. Furthermore, a plurality of brace receiving grooves **134** is provided, one at each corner of cavity **114** for receiving a reinforcing brace (FIGS. **15** and **19**) subsequent to removal of vertebra **32** therefrom.

According to FIG. **19**, reinforcing brace **136** is inserted within implant **106** so as to structurally enforce the box-shaped base body configuration. Preferably, brace **136** includes fenestrations **138** for facilitating bony ingrowth and through growth there along. Preferably, bone graft material **20** is also inserted in the remaining portions of cavity **114**, along brace **136**. The bone graft material further facilitates ingrowth and through growth between vertebrae **90** and **94**, and with graft material **20**. Additionally, a cavity **139** is shown optionally in FIG. **19**, in which bone graft material **20** can be packed to facilitate ingrowth and through growth.

FIG. **15** also discloses an interrupted configuration for each of splines **118** and **120**. Interruptions **140** prevent

inadvertent axial displacement of implant **106** subsequent to implantation. Interruptions **140** in splines **118** and **120** serve to prevent axial motion of each spline within each groove **108** and **110**, respectively. Additionally, or alternatively PMMA can also be inserted between the splines and grooves during implantation. The PMMA, or bone cement facilitates fixation between the implant and grooves **108** and **110**. PMMA can partially fill through holes **128** and/or fenestrations **130** and **132**, further joining with the vertebral bodies **90** and **94** to prevent motion there between.

In compliance with the statute, the invention has been described in language more or less specific as to structural and methodical features. It is to be understood, however, that the invention is not limited to the specific features shown and described, since the means herein disclosed comprise preferred forms of putting the invention into effect. The invention is, therefore, claimed in any of its forms or modifications within the proper scope of the appended claims appropriately interpreted in accordance with the doctrine of equivalents.

I claim:

1. A method of joining together bone bodies, comprising:

preparing bone beds of adjacent bone bodies to receive an implant, the implant having a body with at least one thread segment extending from a surface of the body, the thread segment having an undercut configuration intermediate a crest and the surface of the body, wherein at least a portion of the thread segment decreases in width along a direction extending from the crest toward the surface of the body, the thread segment operative to engage with the bone bodies and an aperture operative to receive living bone from the bone bodies;

inserting the implant in engagement with each of the bone bodies by threading the thread segment in interlocking engagement with the bone beds so as to lock together the bone bodies; and

presenting the implant and the aperture for staged fusion comprising bone ingrowth, bone through growth, bone fusion, and bone reorganization.

2. The method of claim **1** wherein the implant comprises an implantable body having an outer portion configured to engage with each bone bed and a hollow portion communicating with the aperture and operative to receive living bone.

3. The method of claim **1** wherein the aperture comprises a fenestration.

4. The method of claim **1** wherein the aperture comprises a hole extending through the threaded segment.

5. The method of claim **1** wherein the step of preparing the bone beds comprises tapping a female thread within the bone beds.

6. The method of claim **1** wherein the implant comprises a base body having an outer surface comprising the thread segment and a hollow portion provided within the body, the aperture communicating with the hollow portion.

7. The method of claim **1** wherein the implant comprises a hollow cylindrical body, a helical thread extending radially outward of the body, and a plurality of fenestrations provided in the body extending between a hollow central portion and an outer surface.

8. The method of claim **1** wherein the aperture comprises a fenestration and wherein the step of presenting the implant and the aperture for staged fusion in the form of bone ingrowth comprises growing osteogenic bone within the fenestration.

9. The method of claim **1** wherein the aperture comprises a fenestration and wherein the step of presenting the implant and the aperture for staged fusion in the form of bone through growth comprises growing osteogenic bone through the fenestration.

10. The method of claim **1** wherein the aperture comprises a fenestration and wherein the step of presenting the implant and the aperture for staged fusion in the form of bone fusion comprises growing osteogenic bone through the implant and the aperture, and between the bone bodies.

11. The method of claim **1** wherein the aperture comprises a fenestration and wherein the step of presenting the implant and the aperture for stage fusion in the form of bone reorganization comprises reorganizing osteogenic bone formed through the implant and the aperture via Wolff's Law.

12. The method of claim **1** wherein the aperture comprises a hole extending through the thread segment and wherein the step of presenting the implant and the aperture for staged fusion in the form of bone ingrowth comprises growing osteogenic bone within the hole.

13. The method of claim **1** wherein the aperture comprises a hole extending through the thread segment and wherein the step of presenting the implant and the aperture for staged fusion in the form of bone through growth comprises growing osteogenic bone through the hole.

14. A method of joining together bone bodies, comprising:

preparing bone bodies to receive an implant, the implant having a body with a thread segment extending from a surface of the body, the thread segment having an undercut configuration intermediate a crest and the surface of the body, wherein at least a portion of the thread segment decreases in width along a direction extending from the crest toward the surface of the body, the thread segment configured to unite the bone bodies and an aperture operative to receive living bone from the bone bodies;

inserting the implant in engagement with each bone body by threading the thread segment in interlocking engagement with living bone from each bone body, locking the bone bodies together; and

positioning the implant for staged bone fusion.

15. The method of claim **14** wherein the step of positioning the inserted implant for staged bone fusion comprises positioning the aperture for bone ingrowth, bone through growth, bone fusion, and bone reorganization.

16. The method of claim **14** wherein the thread segment comprises a plurality of individual thread segments defining a thread pattern.

17. The method of claim **14** wherein the step of preparing the bone bodies comprises forming a threaded bore into a disk space and at least partially into adjoining portions of the bone bodies to be joined, the bore being sized to receive the implant upon insertion.

18. The method of claim **14** wherein the implant comprises a cylindrical body having a hollow interior portion and a threaded outer portion, and the aperture comprises a plurality of fenestrations extending between the interior portion and the outer portion.

19. The method of claim **18** wherein the threaded outer portion comprises axially extending through holes, the step of positioning the implant for staged fusion comprising locating the through holes adjacent the bone beds such that living bones grow successively into the holes, through the holes, fuses completely through the holes, and remodels within and around the holes.

20. The method of claim **14** wherein the step of positioning the implant for staged bone fusion comprises presenting the aperture for bone ingrowth and bone through growth.

21. The method of claim **20** further comprising the step of presenting the aperture for bone fusion and bone remodelling.

22. A method for fusing together an adjacent pair of vertebrae, comprising:

preparing adjacent portions of each vertebra to cooperatively form at least part of a threaded bore for receiving an implant, the implant having a body with a complementary thread segment configured to mate in engagement with the threaded bore so as to immediately retain together the vertebrae, and an aperture in the implant presented to receive living bone;

inserting the implant between the vertebrae in threaded engagement; and

positioning the implant aperture to receive living bone during staged bone fusion;

wherein the thread segment comprises an undercut helical thread extending from a surface of the body, the thread segment having an undercut configuration intermediate a crest and the surface of the body, wherein at least a portion of the thread segment decreases in width along a direction extending from the crest toward the surface of the body, the step of inserting the implant between the vertebrae comprising engaging the undercut helical thread in interlocking engagement with a bone bed of each vertebra so as to instantly fix together the vertebrae.

23. The method of claim **22** wherein the step of preparing adjacent portions of each vertebra comprises forming a threaded bore between the pair of adjacent vertebrae.

24. The method of claim **22** wherein the aperture comprises a plurality of spaced apart fenestrations configured and inserted between the vertebrae to facilitate bone ingrowth, bone through growth, bone fusion and bone reorganization.

25. The method of claim **24** wherein the aperture comprises a plurality of fenestrations and the step of inserting the implant and the step of positioning the implant comprise threading the implant so as to present the fenestrations immediately adjacent the threaded bore portion of each vertebra.

26. The method of claim **24** wherein the thread segment comprises a helical thread and the implant comprises holes extending axially of the implant and through the thread.

27. The method of claim **24** wherein the implant is positioned with the aperture communicating with one of the vertebrae to facilitate staged bone fusion.

28. The method of claim **22** wherein the step of inserting the implant comprises threading the implant in interlocking engagement between the vertebrae.

29. The method of claim **22** wherein bone reorganization comprises stress-induced bone remodelling.

30. The method of claim **22** wherein staged bone fusion comprises in sequence the steps of bone ingrowth, bone through growth, bone fusion and bone reorganization.

31. A spinal implant for joining together vertebral bodies, comprising:

a unitary implantable body having:

(a) an outer portion comprising at least one thread segment having a tapering undercut portion provided on the thread segment extending from a surface of the body, the thread segment having an undercut configuration intermediate a crest and the surface of the body, wherein at least a portion of the thread segment decreases in width along a direction extending from the crest toward the surface of the body, the outer portion configured to engage in interlocking relation with each vertebral body;

(b) a hollow interior portion;

(c) a plurality of first apertures formed in the body and extending from the outer portion to the inner portion;

(d) a plurality of second apertures formed in and extending through the thread segment; and

(e) the thread segment, first apertures, second apertures, and hollow interior portion cooperating to conjoin and stabilize the vertebral bodies via staged fusion.

32. The spinal implant of claim **31** wherein the first apertures comprise fenestrations.

33. The spinal implant of claim **31** wherein the second apertures each comprise a transverse throughhole provided between opposed spaces of the thread, the throughhole configured to promote early physiological ingrowth of morphological bone so as to interlock the implant within each vertebral body to be joined.

* * * * *