US 20100082485A1

(19) United States

(12) Patent Application Publication

Lin et al.

(10) Pub. No.: US 2010/0082485 A1

(43) Pub. Date: Apr. 1, 2010

(54) PORTABLE POINT OF PURCHASE DEVICES AND METHODS

(75) Inventors: **Gloria Lin**, San Ramon, CA (US); **Amir Mahmood Mikhak**, Cambridge, MA (US); **Taido Lantz Nakajima**, Cupertino, CA (US); **Sean Anthony Mayo**, Dover, NH (US); **Michael Rosenblatt**, Campbell, CA (US)

Correspondence Address:
APPLE INC.
c/o Fletcher Yoder, PC
P.O. Box 692289
Houston, TX 77269-2289 (US)

(73) Assignee: **Apple Inc.**

(21) Appl. No.: **12/286,445**

(22) Filed: **Sep. 30, 2008**

Publication Classification

(51) **Int. Cl.**
G06Q 30/00 (2006.01)

(52) **U.S. Cl.** **705/44**; 235/383

(57) **ABSTRACT**

Systems, methods, and devices for conducting sales transactions are provided. Embodiments include handheld, portable, electronic, point of purchase devices configured to acquire identification information from articles to be purchased, to determine a purchase price, and to acquire payment information for the purchase price. The point of purchase devices may include one or more input devices such as a near field communication device, a camera, a scanner, and a biometric sensor for acquiring the identification information and/or the payment information. In some embodiments, the near field communication device may be detachable from the point of purchase device. The point of purchase devices also may contain communication interfaces, such as a near field communication interface, a local area network interface, a short message service interface, and a personal area network interface, for transmitting the information to an external server.

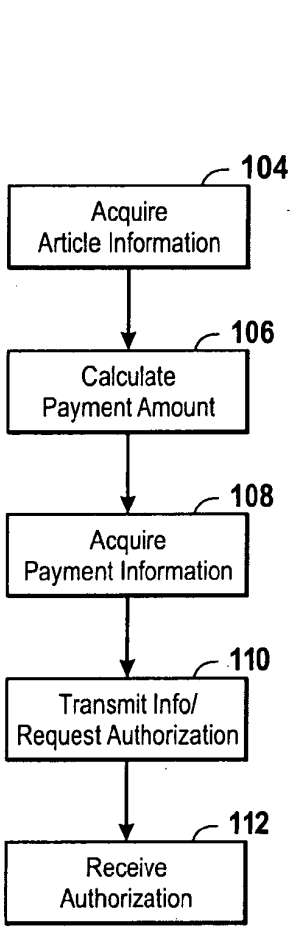

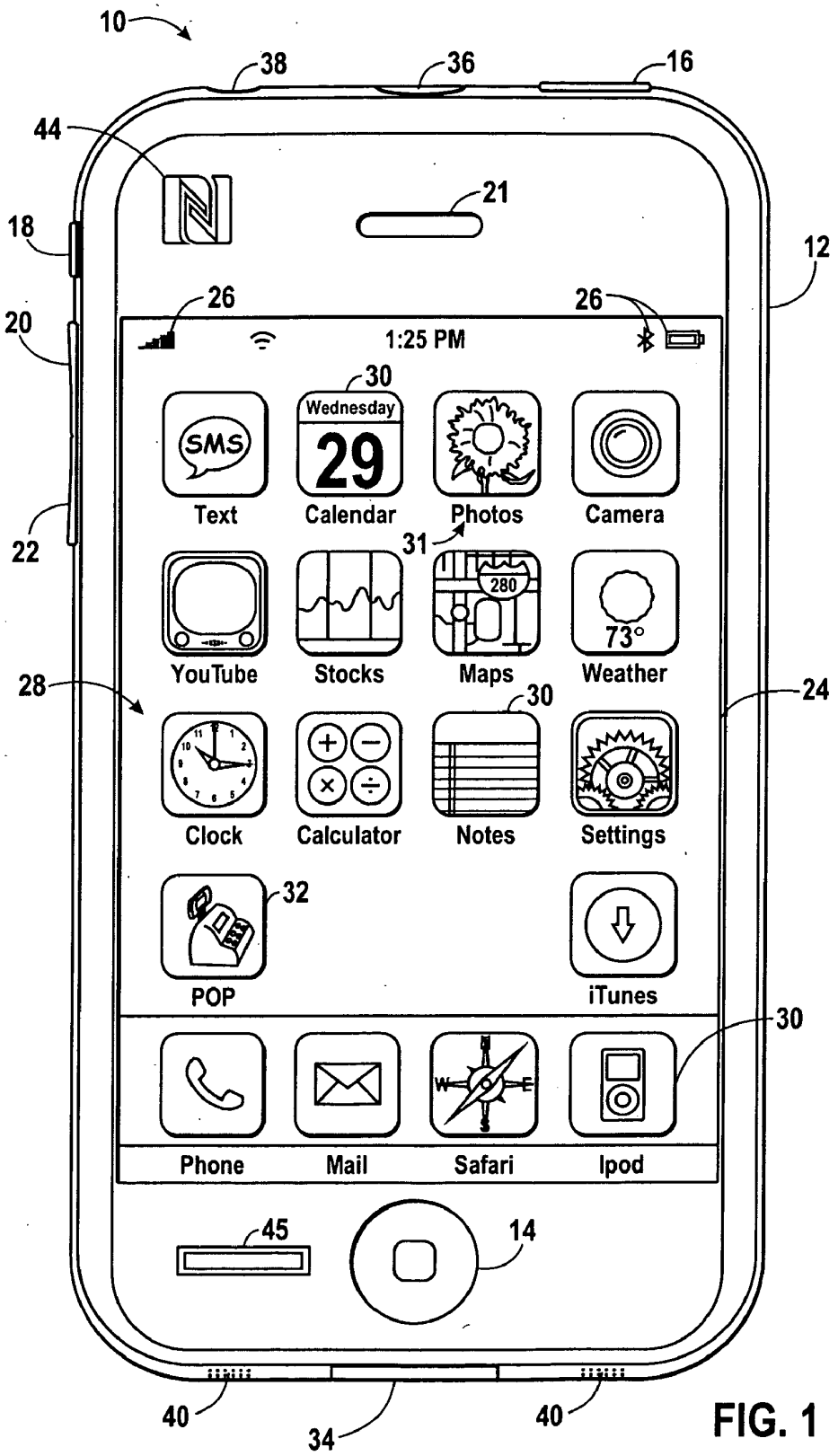
10
38
36
16
44
21
18
12
26
26
20
1:25 PM
30
Wednesday
29
SMS
Text
Calendar
Photos
Camera
22
31
280
73°
YouTube
Stocks
Maps
Weather
28
24
30
Clock
Calculator
Notes
Settings
32
POP
iTunes
30
Phone
Mail
Safari
Ipod
45
14
40
34
40

FIG. 1

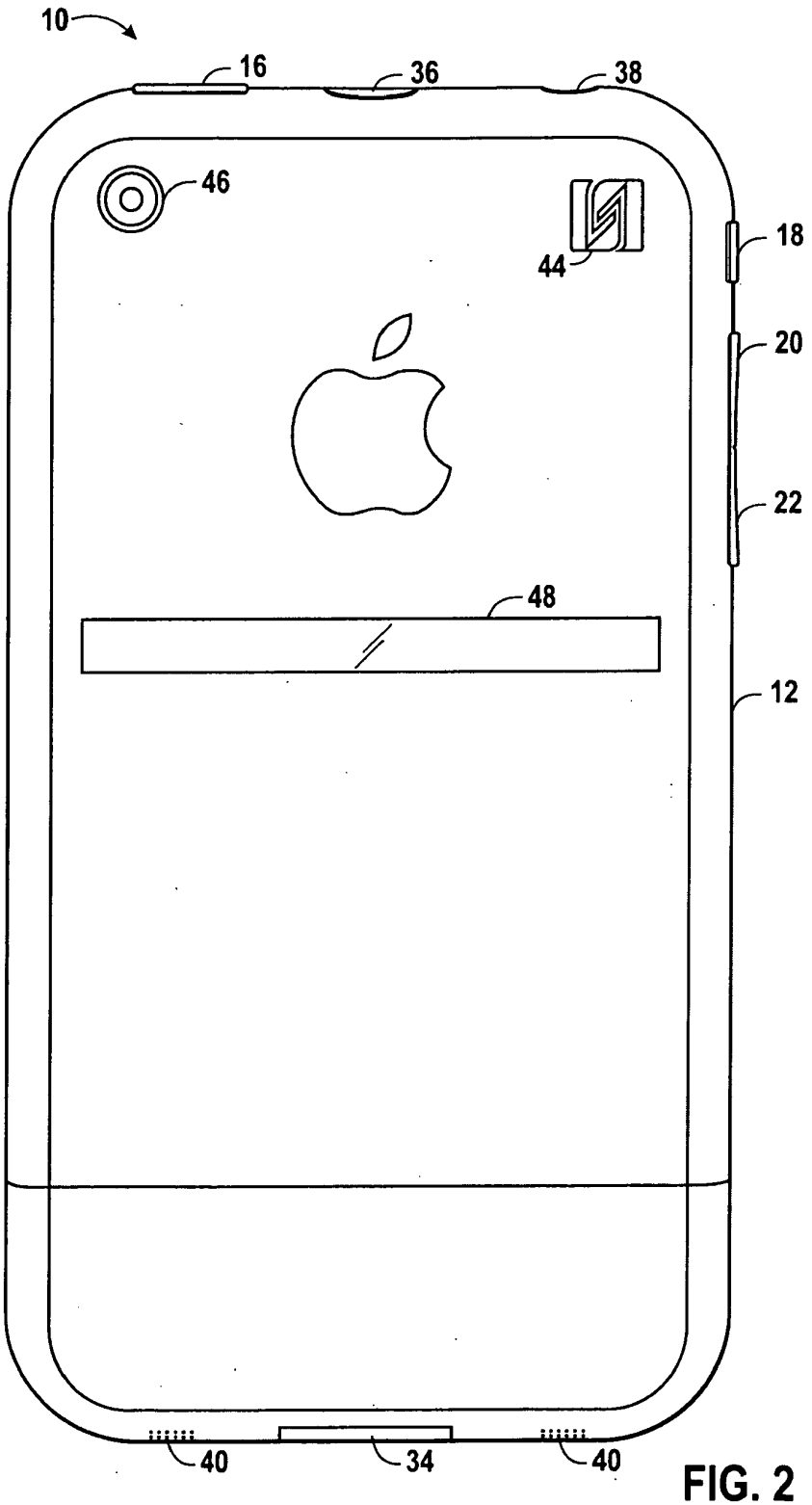

FIG. 2

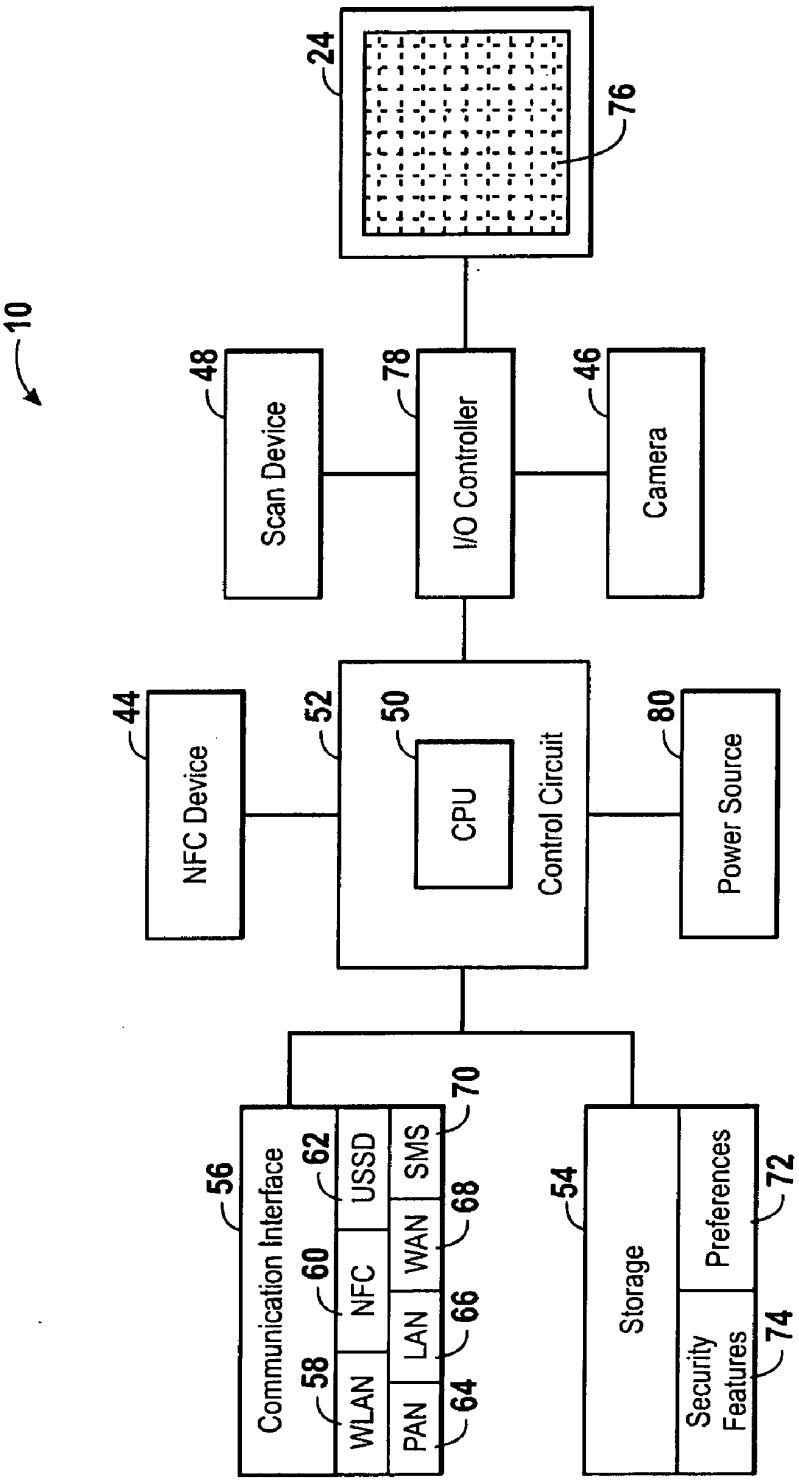
10
24
76
48
Scan Device
78
I/O Controller
46
Camera
44
NFC Device
52
50
CPU
Control Circuit
80
Power Source
56
Communication Interface
58
WLAN
60
NFC
62
USSD
64
PAN
66
LAN
68
WAN
70
SMS
54
Storage
Preferences
72
Security Features
74

FIG. 3

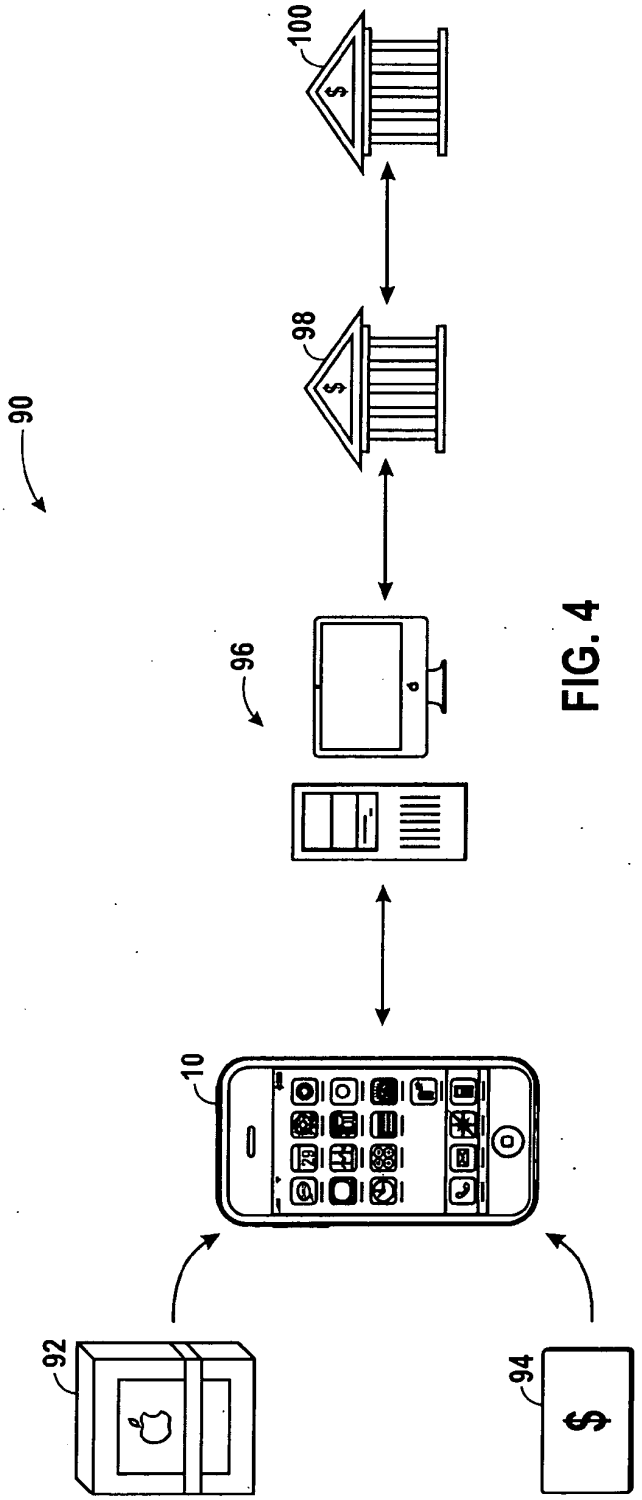

FIG. 4

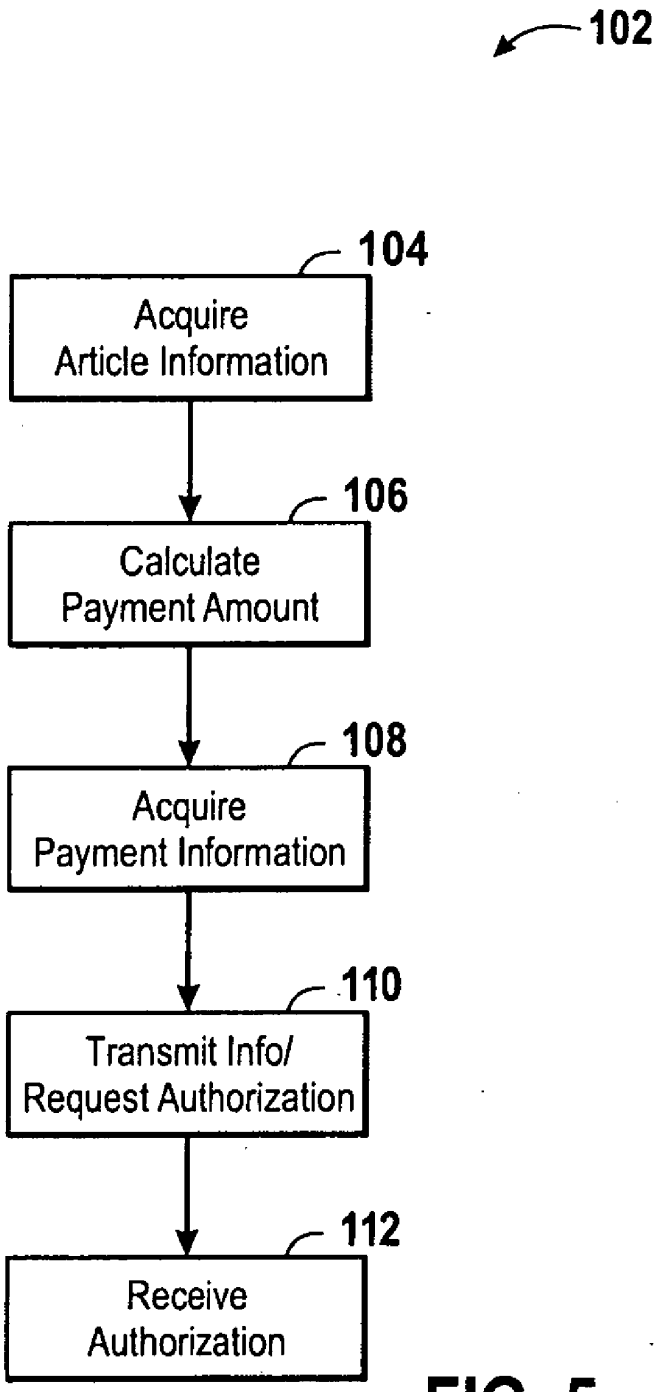
102
104
Acquire Article Information
106
Calculate Payment Amount
108
Acquire Payment Information
110
Transmit Info/ Request Authorization
112
Receive Authorization

FIG. 5

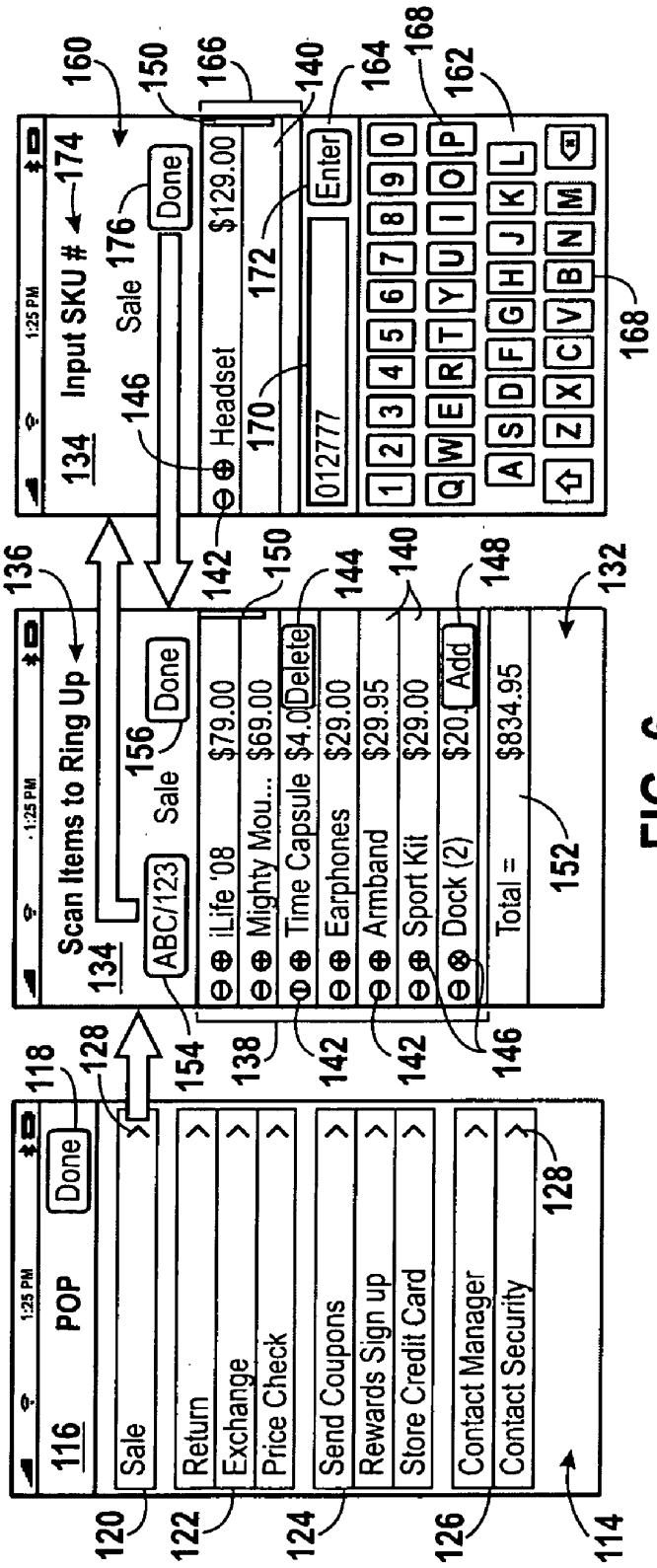
1:25 PM
116
POP
Done
Sale
Return
Exchange
Price Check
Send Coupons
Rewards Sign up
Store Credit Card
Contact Manager
Contact Security
114
118
120
122
124
126
128
Scan Items to Ring Up
134
ABC/123
Sale
Done
iLife '08 $79.00
Mighty Mou... $69.00
Time Capsule $4.0
Delete
Earphones $29.00
Armband $29.95
Sport Kit $29.00
Dock (2) $20.
Add
Total = $834.95
132
136
138
140
142
144
146
148
150
152
154
156
Input SKU #
174
Sale
Done
Headset $129.00
012777
Enter
160
162
164
166
168
170
172
176

FIG. 6

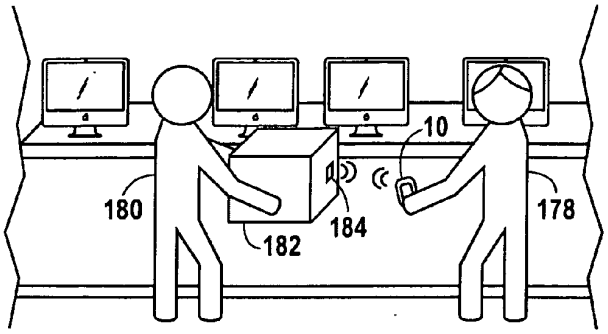

FIG. 7

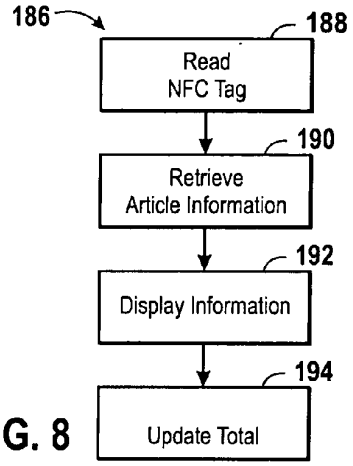

FIG. 8

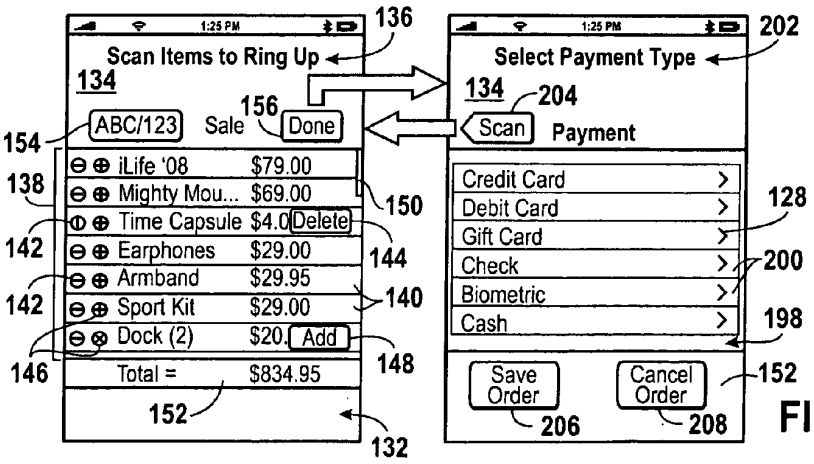

FIG. 9

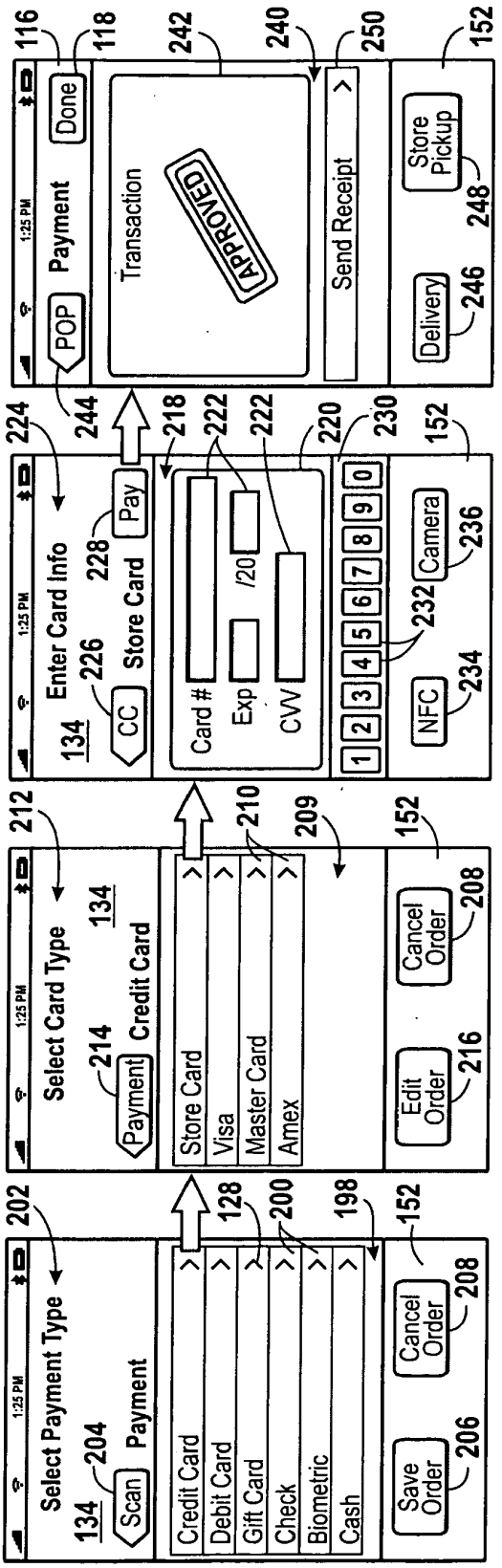
Select Payment Type
134
Scan
204
Payment
Credit Card
Debit Card
Gift Card
Check
Biometric
Cash
Save Order
206
Cancel Order
208
202
128
200
198
152
Select Card Type
134
Payment
214
Credit Card
Store Card
Visa
Master Card
Amex
Edit Order
216
Cancel Order
208
212
210
209
152
Enter Card Info
134
CC
226
Store Card
Pay
228
Card #
Exp
/20
CVV
1 2 3 4 5 6 7 8 9 0
NFC
234
Camera
236
224
218
222
222
220
230
152
POP
Payment
Done
Transaction
APPROVED
Send Receipt
Delivery
246
Store Pickup
248
244
116
118
242
240
250
152

FIG. 10

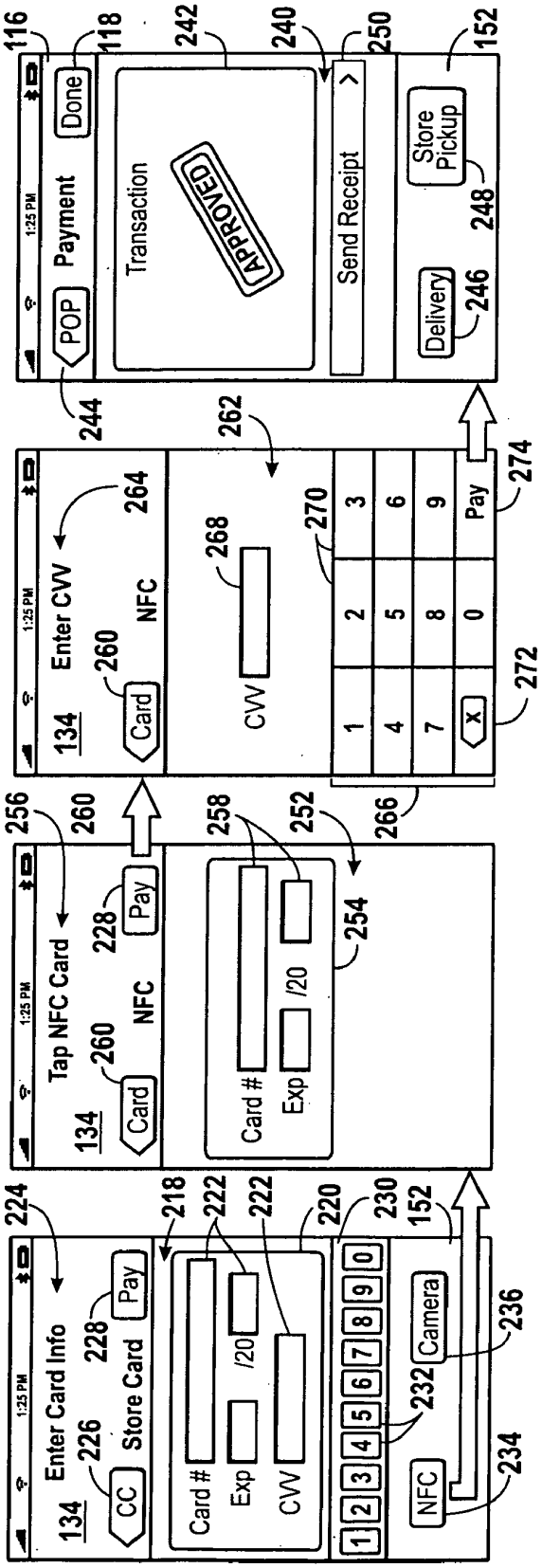
1:25 PM
Enter Card Info
134
CC
226
Store Card
228
Pay
224
218
Card #
Exp
CVV
/20
222
222
220
230
1 2 3 4 5 6 7 8 9 0
NFC
232
Camera
234
236
152
Tap NFC Card
134
Card
260
NFC
228
Pay
256
260
Card #
Exp
/20
258
252
254
Enter CVV
134
Card
260
NFC
264
CVV
268
262
1 2 3
4 5 6
7 8 9
x 0 Pay
270
272
266
274
Payment
POP
Done
116
118
Transaction
APPROVED
242
240
Send Receipt
250
Delivery
246
Store Pickup
248
152
244

FIG. 11

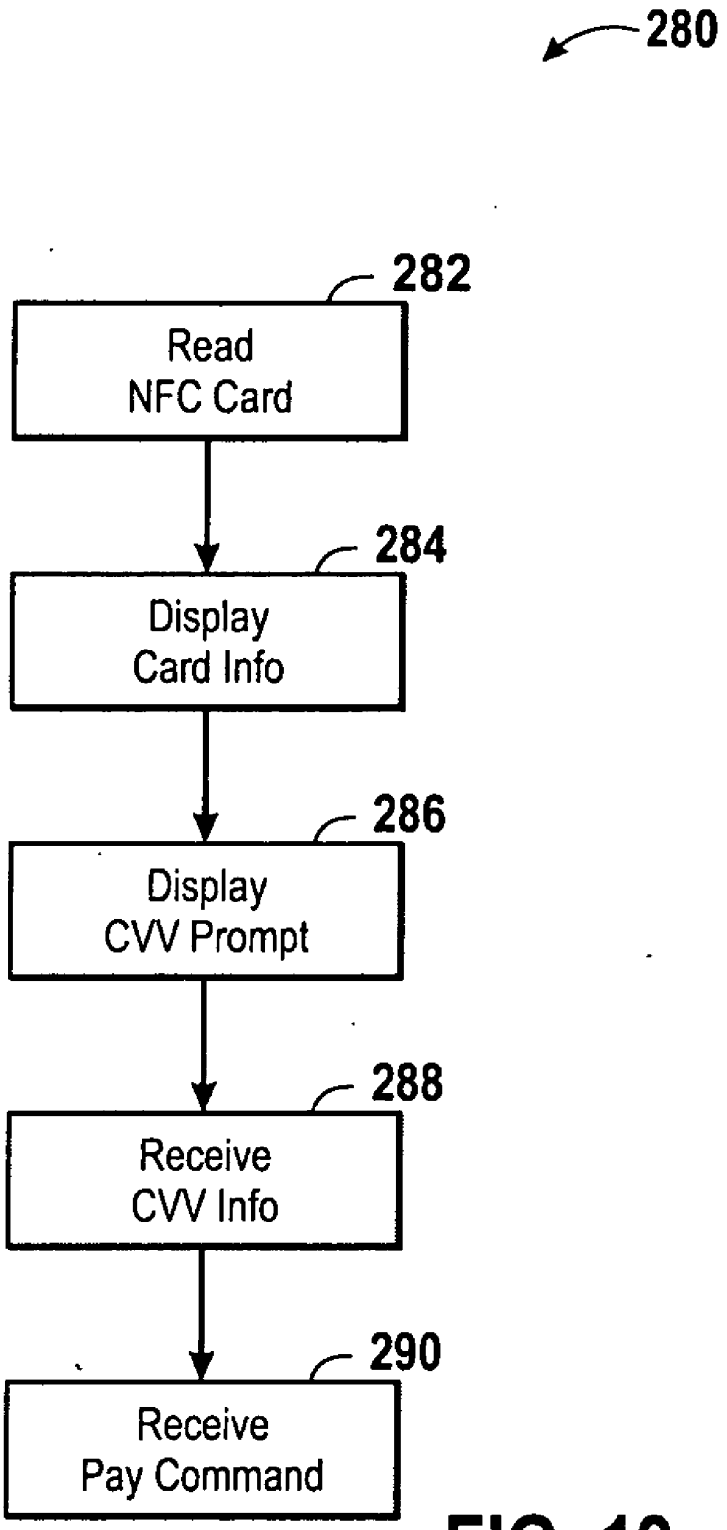
280
282
Read
NFC Card
284
Display
Card Info
286
Display
CVV Prompt
288
Receive
CVV Info
290
Receive
Pay Command

FIG. 12

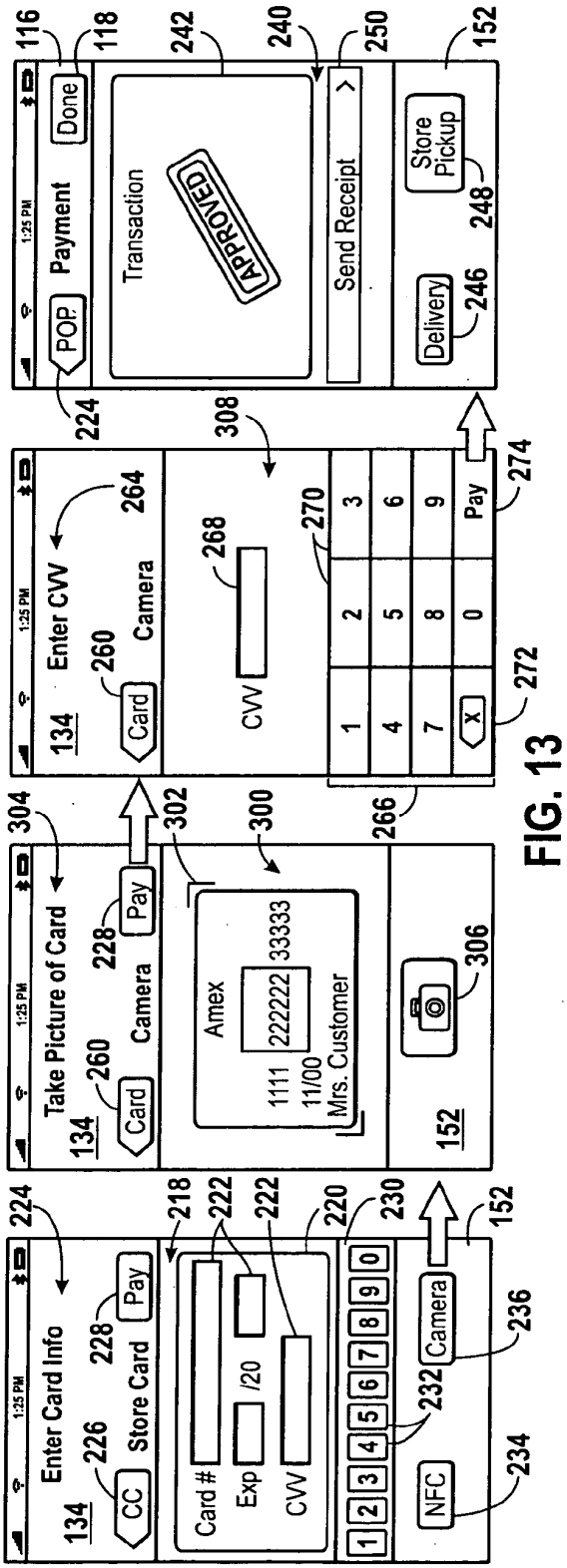
1:25 PM
Enter Card Info
134
CC
226
Store Card
228
Pay
224
Card #
Exp
/20
CVV
218
222
222
220
230
1 2 3 4 5 6 7 8 9 0
NFC
234
232
Camera
236
152
Take Picture of Card
134
Card
260
Camera
228
Pay
304
302
300
Amex
1111 222222 33333
11/00
Mrs. Customer
152
306
Enter CVV
134
Card
260
Camera
264
CVV
268
308
1 2 3
4 5 6
7 8 9
X 0 Pay
266
270
272
274
POP
224
Payment
Done
116
118
Transaction
APPROVED
242
240
Send Receipt
250
Delivery
246
Store Pickup
248
152

FIG. 13

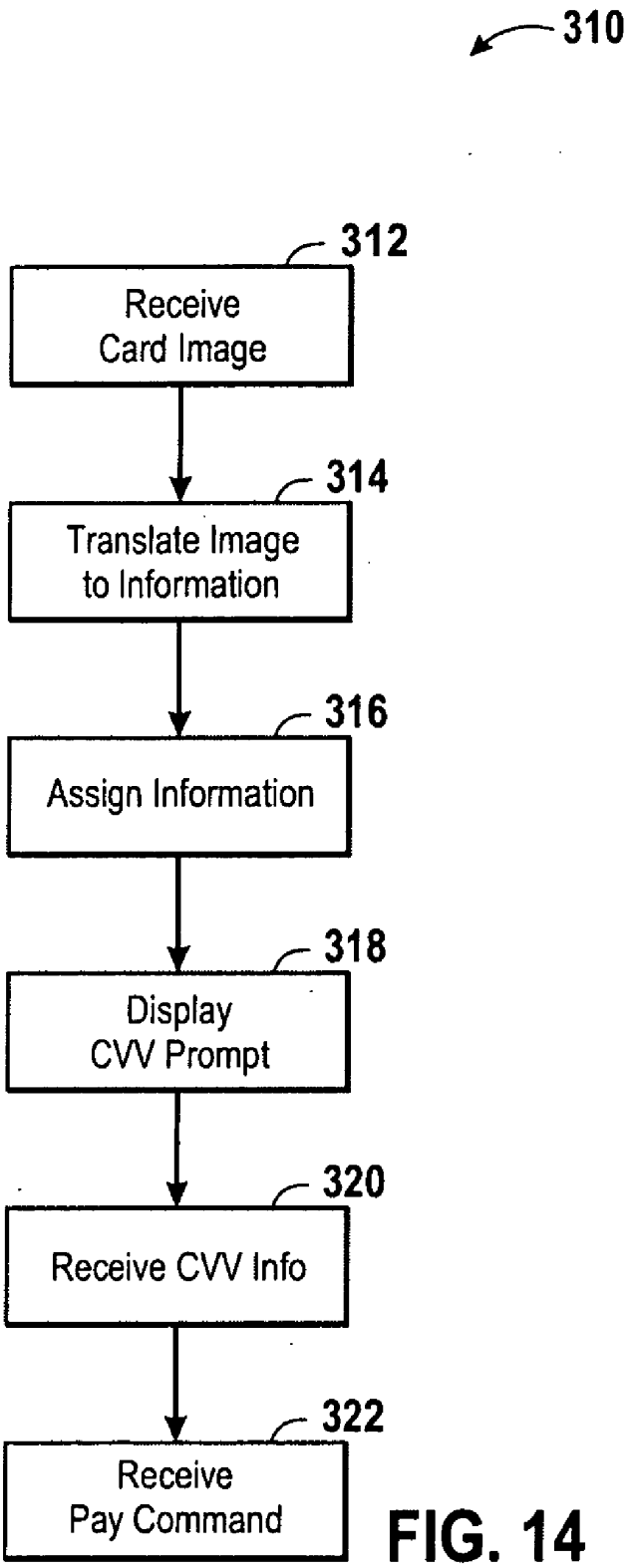
310
312
Receive Card Image
314
Translate Image to Information
316
Assign Information
318
Display CVV Prompt
320
Receive CVV Info
322
Receive Pay Command

FIG. 14

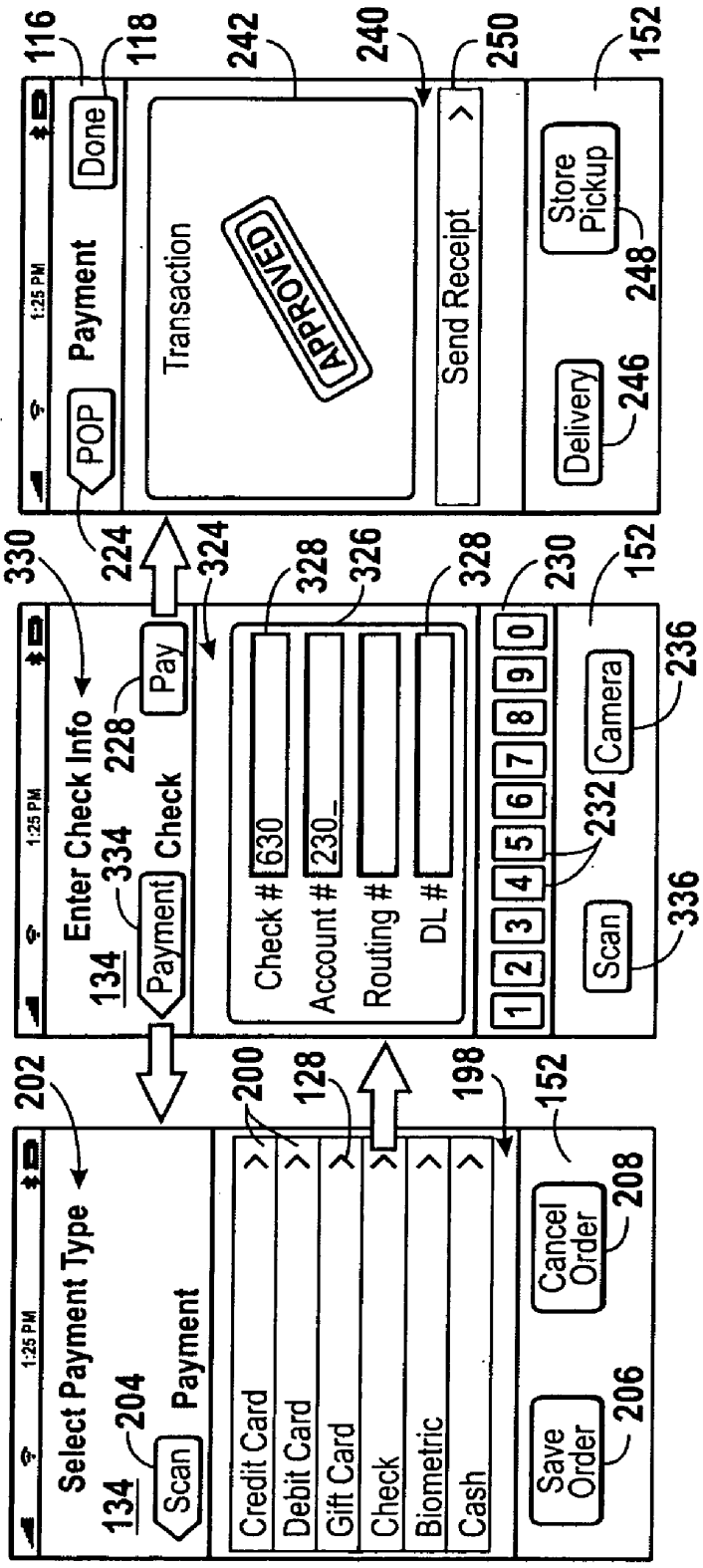
1:25 PM
Select Payment Type
134
Scan
204
Payment
Credit Card
Debit Card
Gift Card
Check
Biometric
Cash
Save Order
206
Cancel Order
208
202
200
128
198
152
Enter Check Info
134
Payment
334
Check
228
Pay
330
324
Check #
630
Account #
230_
Routing #
DL #
328
326
328
230
1
2
3
4
5
6
7
8
9
0
232
Scan
336
Camera
236
152
POP
224
Payment
Done
116
118
Transaction
APPROVED
242
240
Send Receipt
250
Delivery
246
Store Pickup
248
152

FIG. 15

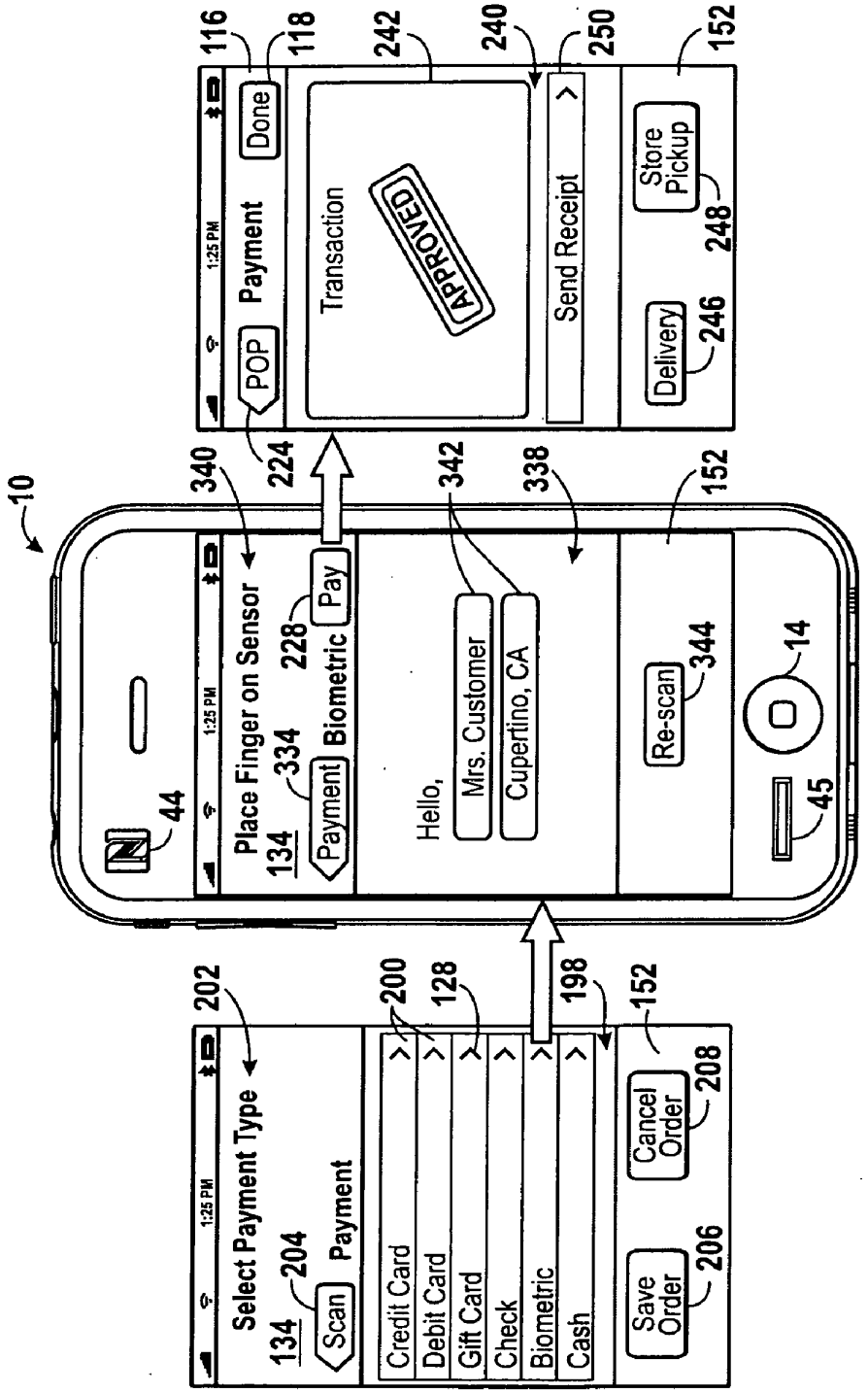
10
1:25 PM
Select Payment Type
134
204
Scan
Payment
202
Credit Card
Debit Card
Gift Card
Check
Biometric
Cash
200
128
198
Save Order
206
Cancel Order
208
152
44
Place Finger on Sensor
134
334
Payment
Biometric
228
Pay
340
224
Hello,
Mrs. Customer
Cupertino, CA
342
338
Re-scan
344
14
45
POP
Payment
Done
116
118
Transaction
APPROVED
242
240
Send Receipt
250
Delivery
246
Store Pickup
248

FIG. 16

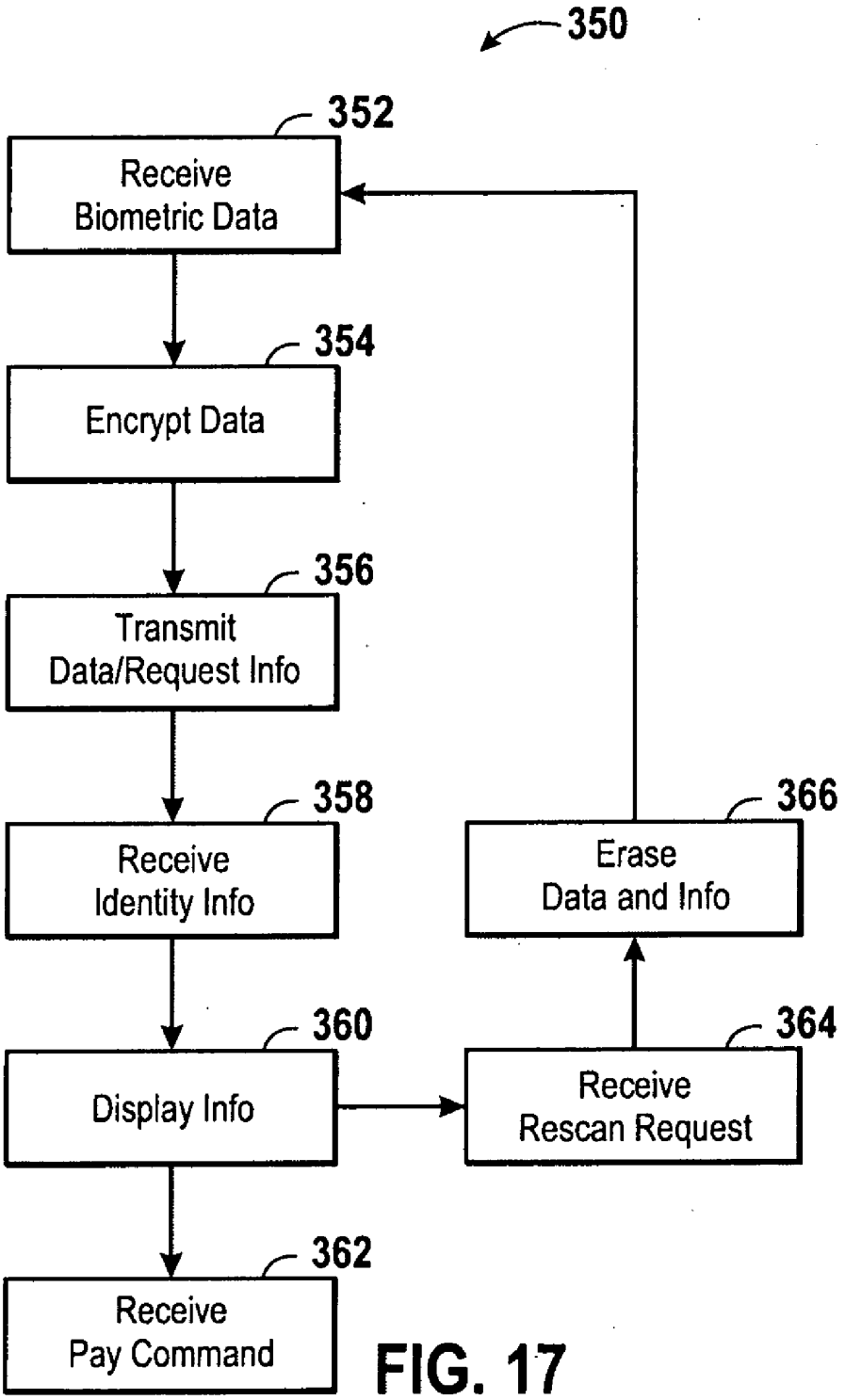
350
352
Receive Biometric Data
354
Encrypt Data
356
Transmit Data/Request Info
358
Receive Identity Info
360
Display Info
362
Receive Pay Command
364
Receive Rescan Request
366
Erase Data and Info

FIG. 17

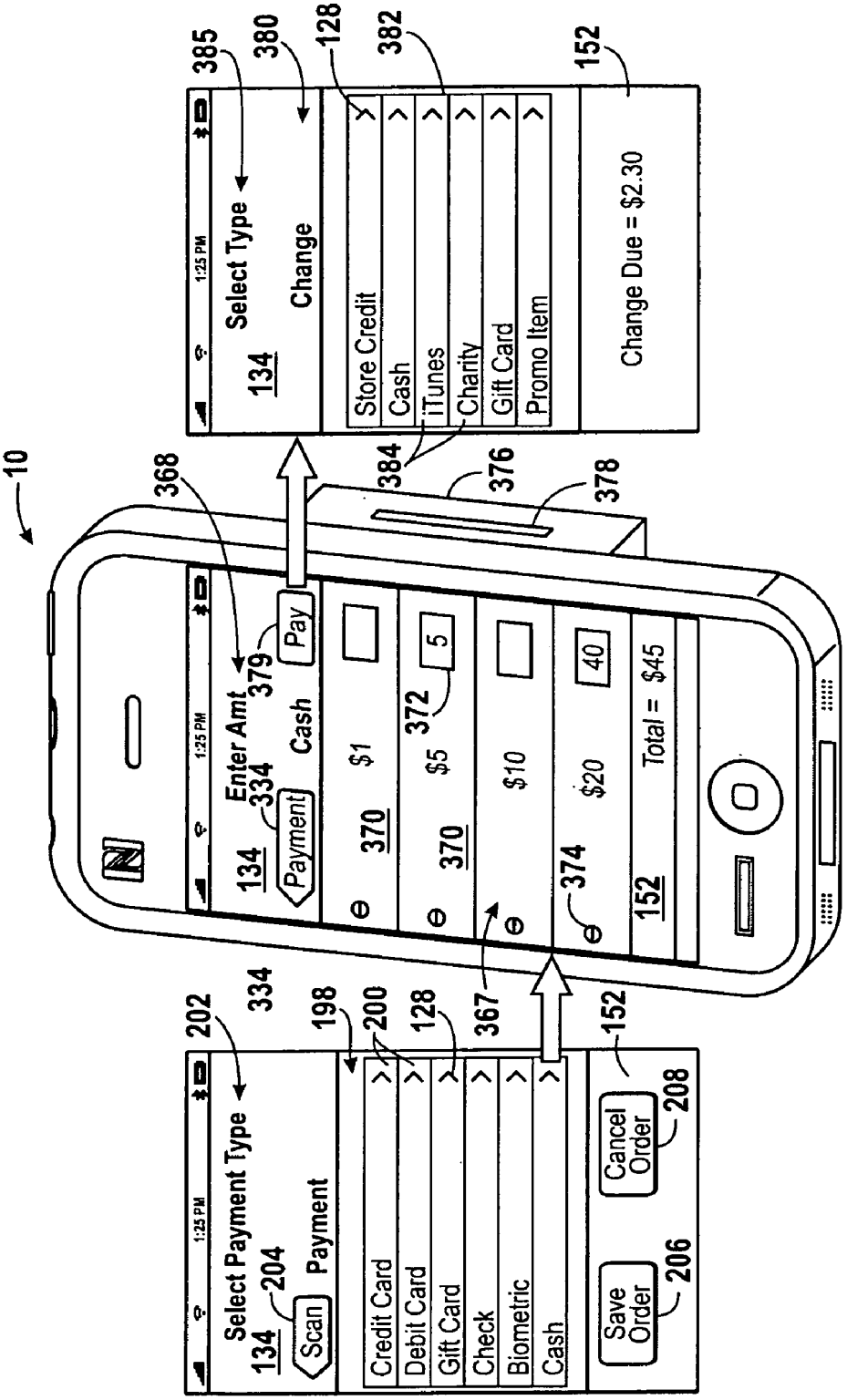
10
1:25 PM
Select Type
134
Change
385
380
128
382
152
Store Credit
Cash
iTunes
Charity
Gift Card
Promo Item
Change Due = $2.30
384
376
378
368
Enter Amt
379
Pay
134
Payment
334
Cash
370
$1
$5
$10
$20
5
40
372
374
Total = $45
152
367
Select Payment Type
202
334
198
200
128
152
134
204
Scan
Payment
Credit Card
Debit Card
Gift Card
Check
Biometric
Cash
Cancel Order
208
Save Order
206

FIG. 18

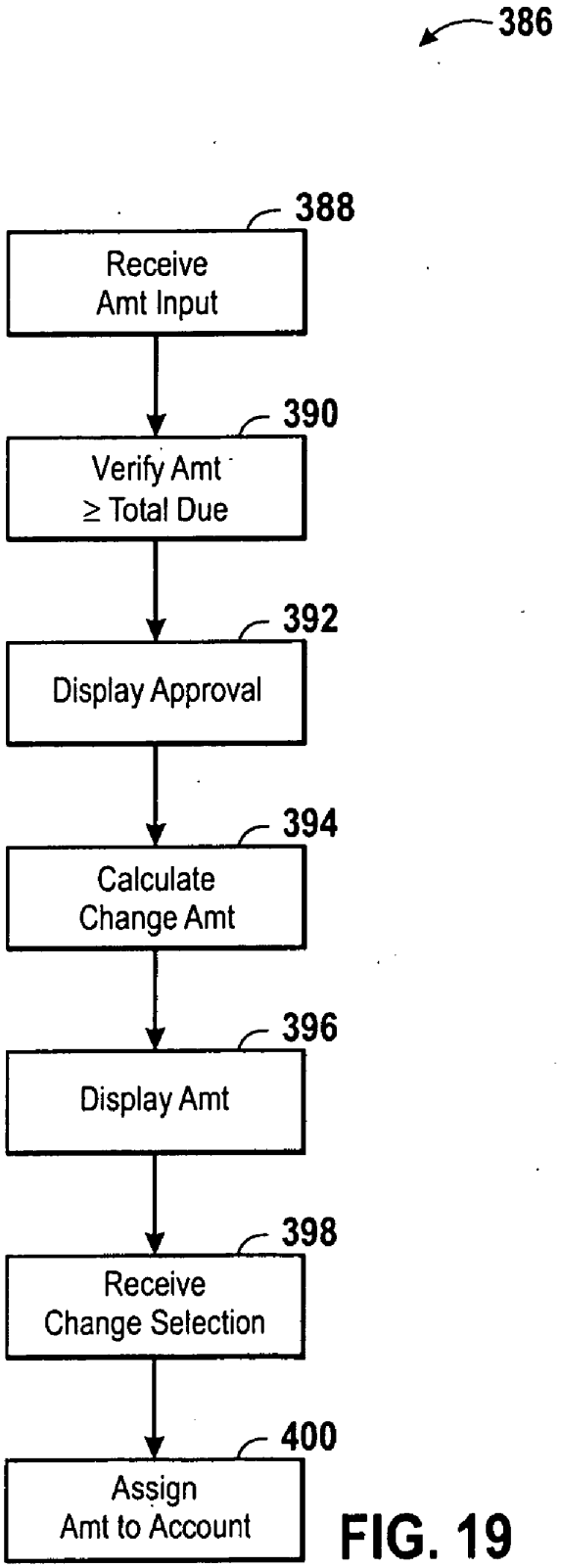
386
388
Receive
Amt Input
390
Verify Amt
≥ Total Due
392
Display Approval
394
Calculate
Change Amt
396
Display Amt
398
Receive
Change Selection
400
Assign
Amt to Account

FIG. 19

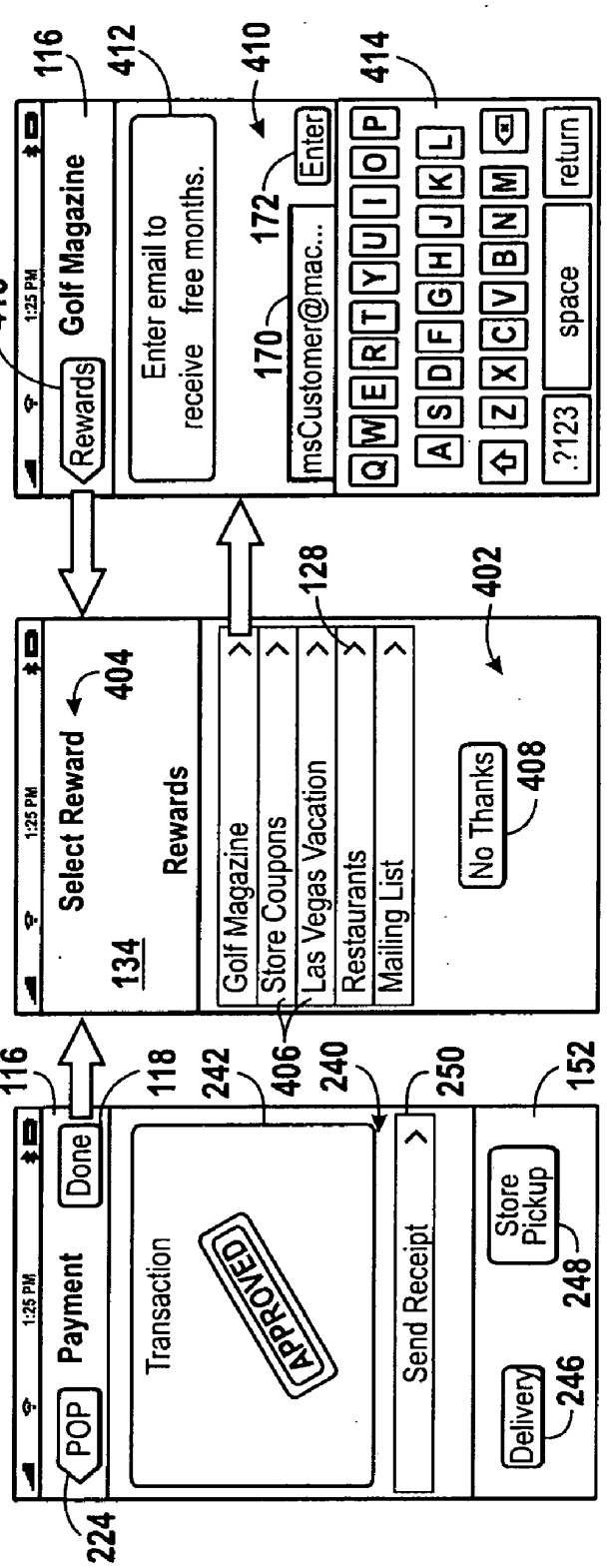
1:25 PM
Rewards
Golf Magazine
Enter email to receive free months.
msCustomer@mac...
Enter
Q W E R T Y U I O P
A S D F G H J K L
Z X C V B N M
.?123
space
return
Select Reward
Rewards
Golf Magazine
Store Coupons
Las Vegas Vacation
Restaurants
Mailing List
No Thanks
POP
Payment
Done
Transaction
APPROVED
Send Receipt
Store Pickup
Delivery
116
412
410
414
416
170
172
404
134
128
402
408
118
242
406
240
250
152
248
246
224

FIG. 20

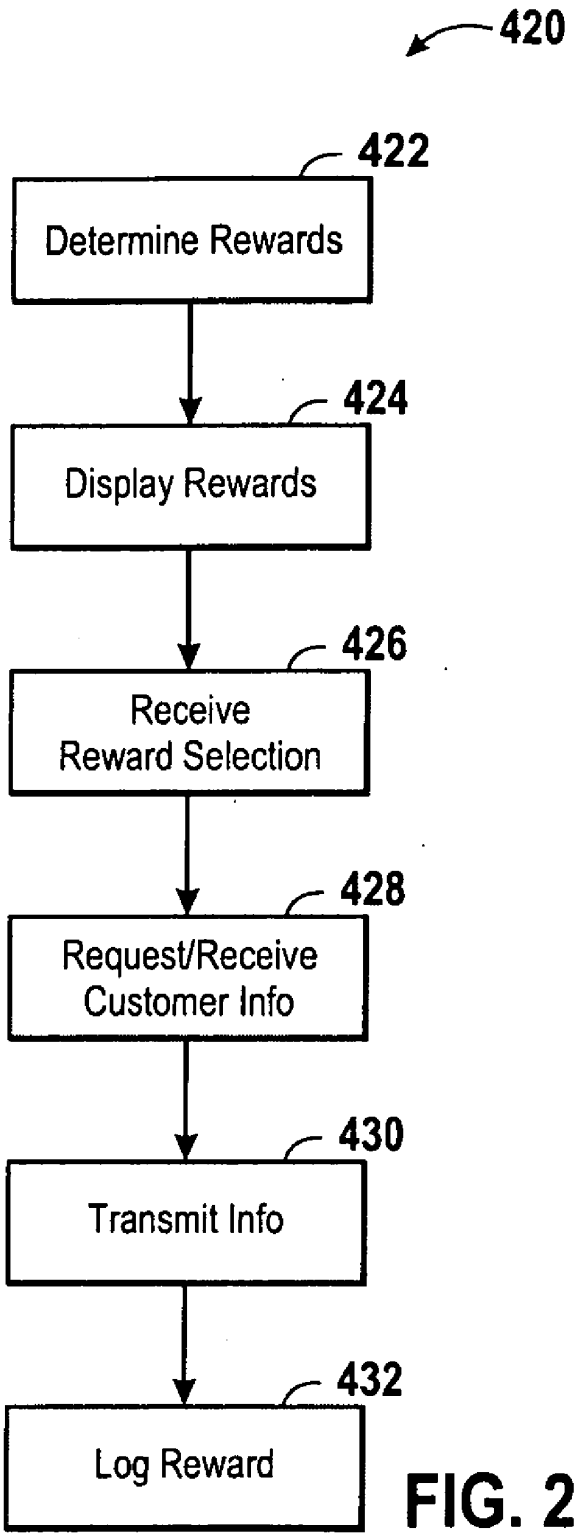
420
422
Determine Rewards
424
Display Rewards
426
Receive
Reward Selection
428
Request/Receive
Customer Info
430
Transmit Info
432
Log Reward

FIG. 21

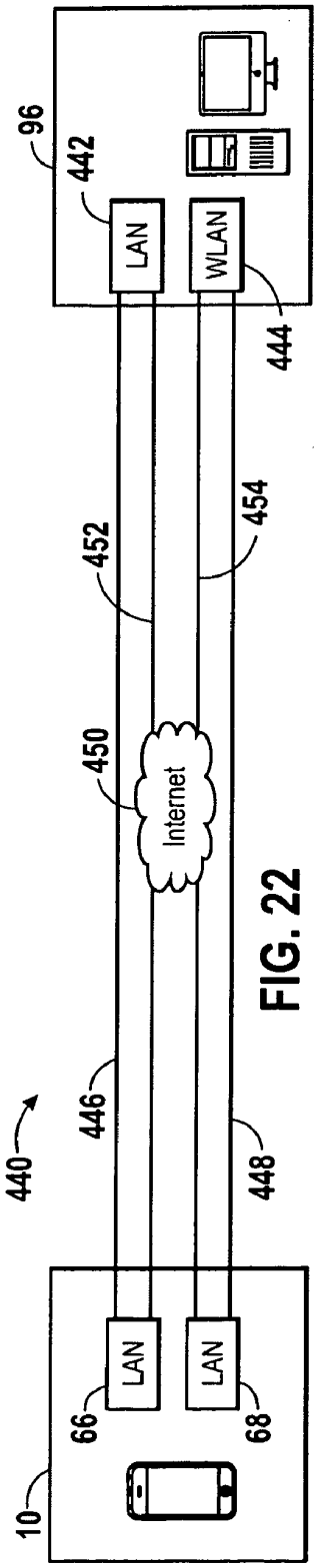

FIG. 22

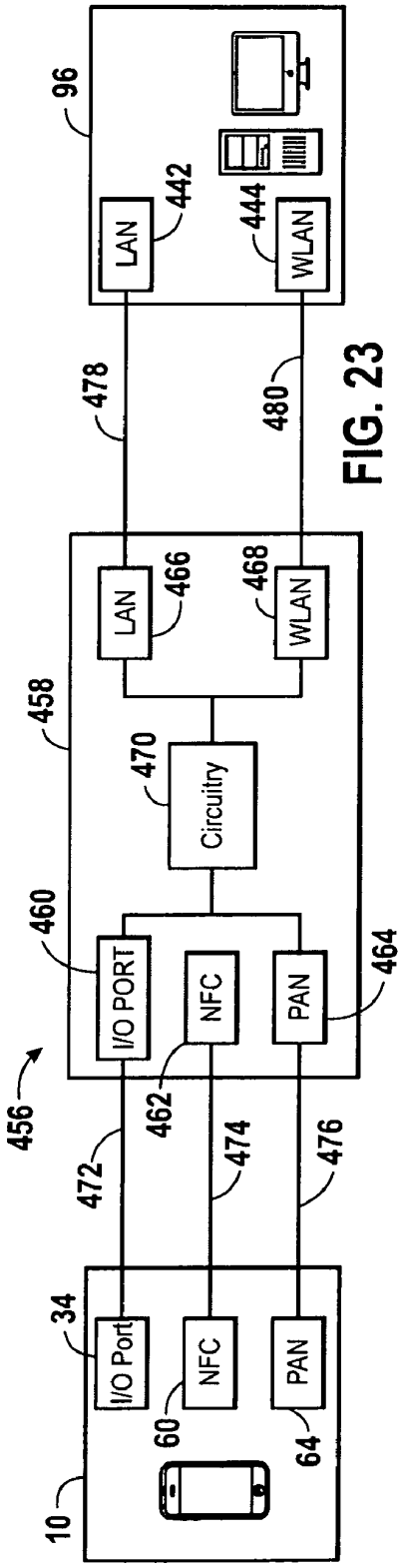

FIG. 23

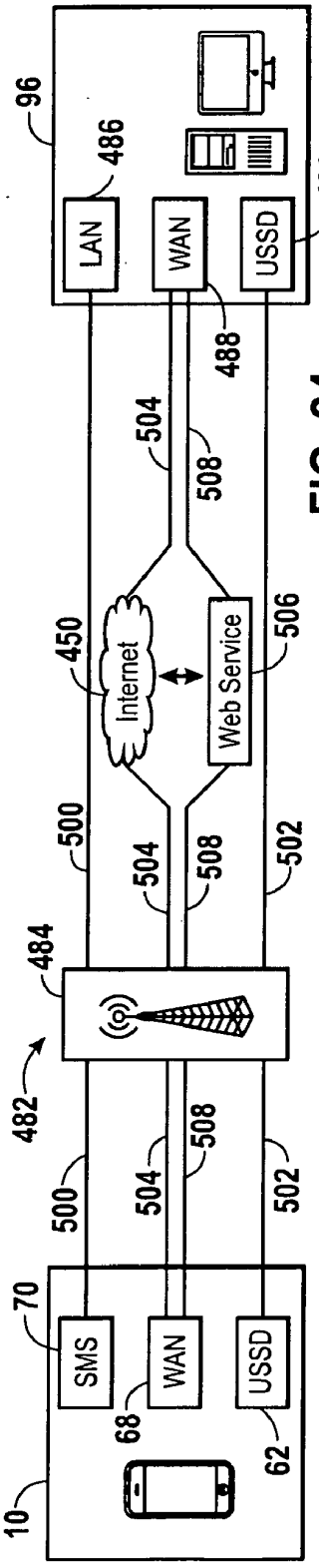

FIG. 24

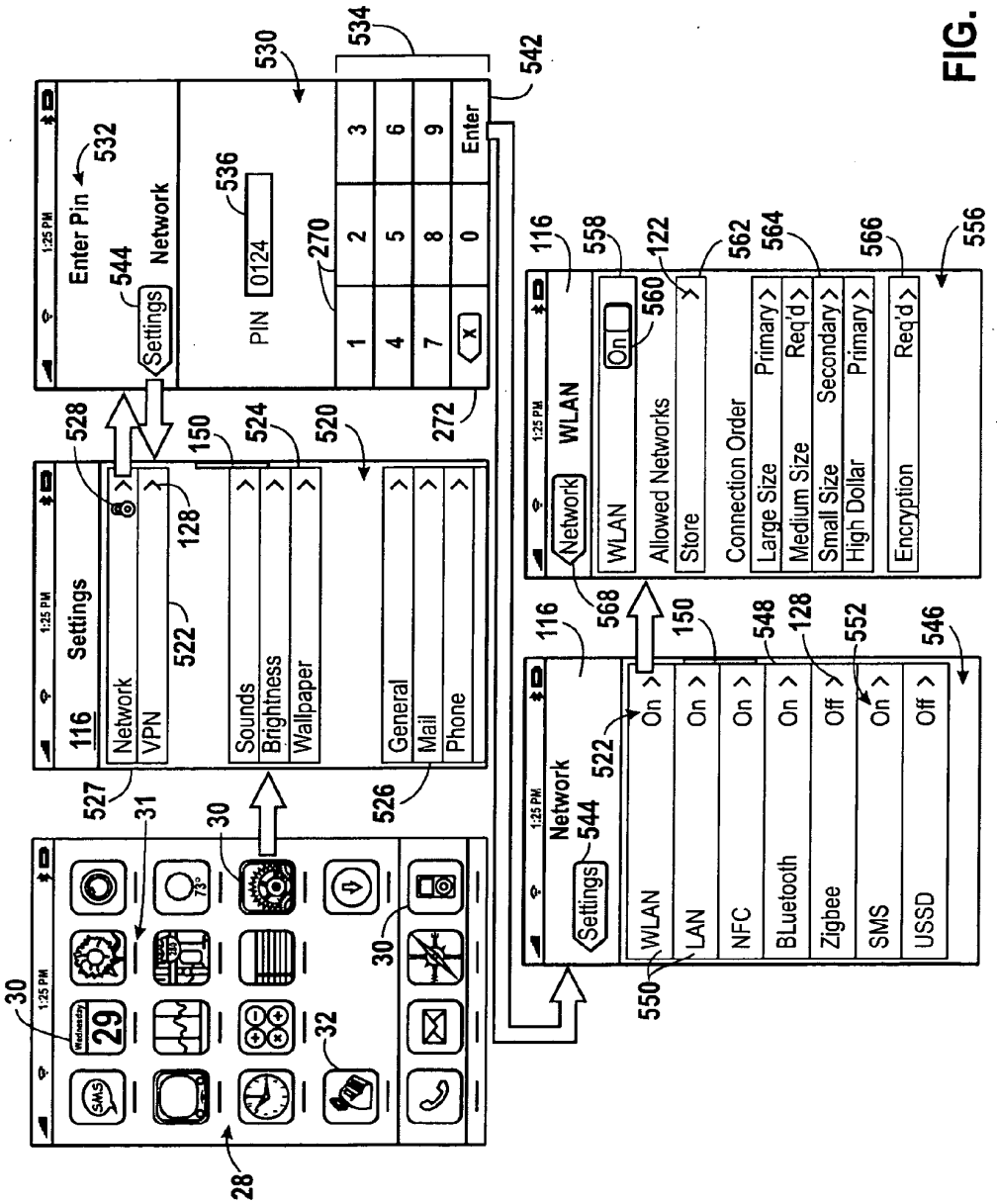
Enter Pin
Settings
Network
PIN
0124
1
2
3
4
5
6
7
8
9
0
Enter
Settings
Network
VPN
Sounds
Brightness
Wallpaper
General
Mail
Phone
Network
WLAN
On
Allowed Networks
Store
Connection Order
Large Size
Primary
Medium Size
Req'd
Small Size
Secondary
High Dollar
Primary
Encryption
Req'd
Settings
Network
WLAN
LAN
NFC
BLuetooth
Zigbee
SMS
USSD
On
On
On
On
Off
On
Off

FIG. 25

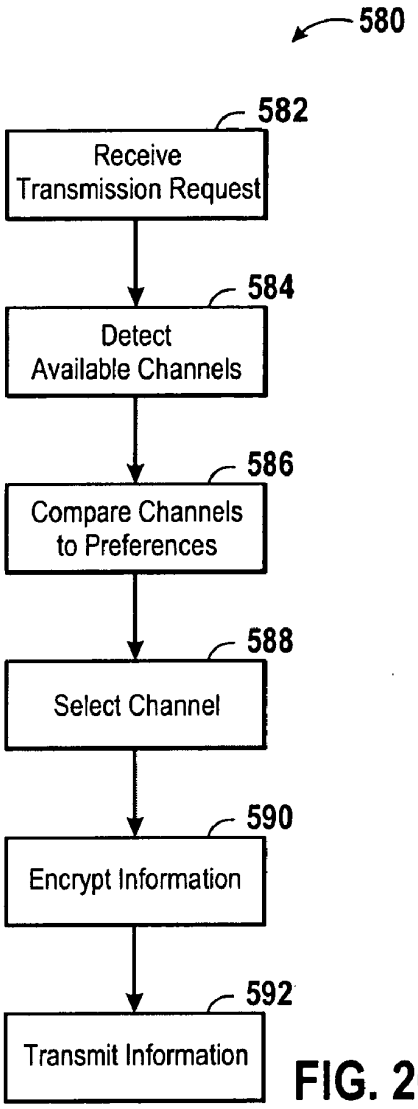
580
582
Receive Transmission Request
584
Detect Available Channels
586
Compare Channels to Preferences
588
Select Channel
590
Encrypt Information
592
Transmit Information

FIG. 26

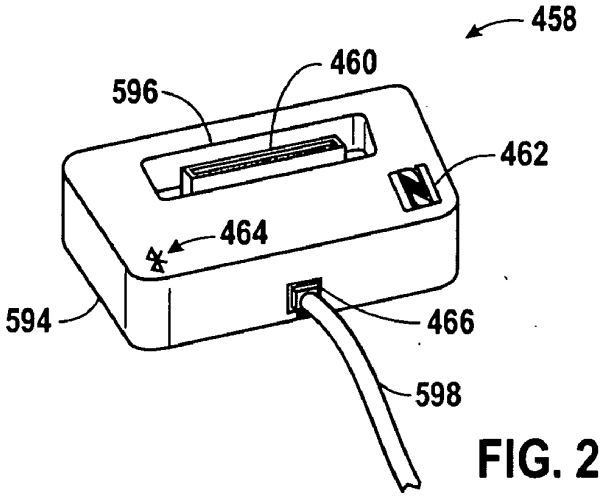
458
460
596
462
464
594
466
598

FIG. 27

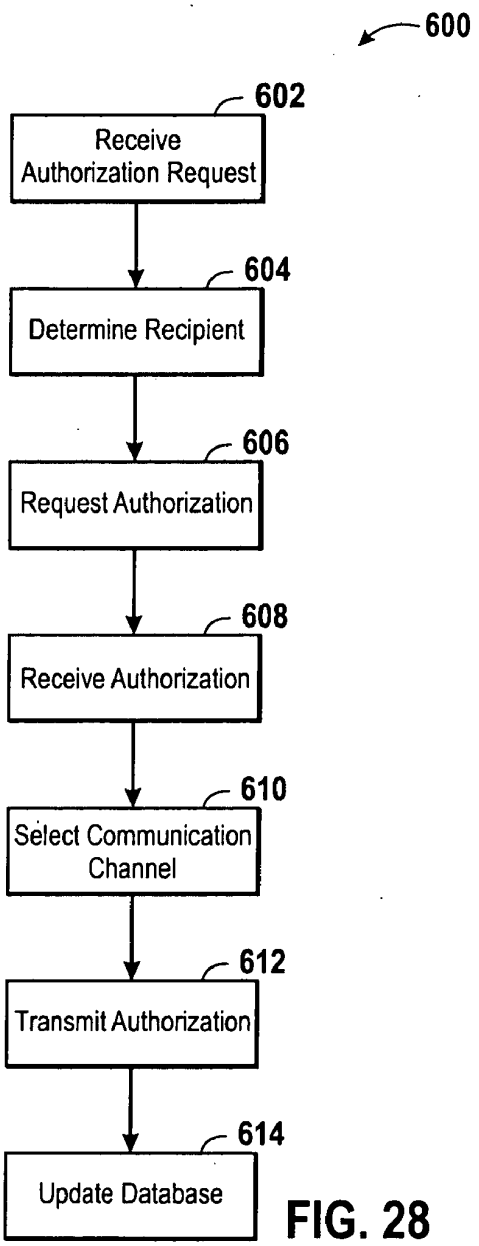
600
602
Receive Authorization Request
604
Determine Recipient
606
Request Authorization
608
Receive Authorization
610
Select Communication Channel
612
Transmit Authorization
614
Update Database

FIG. 28

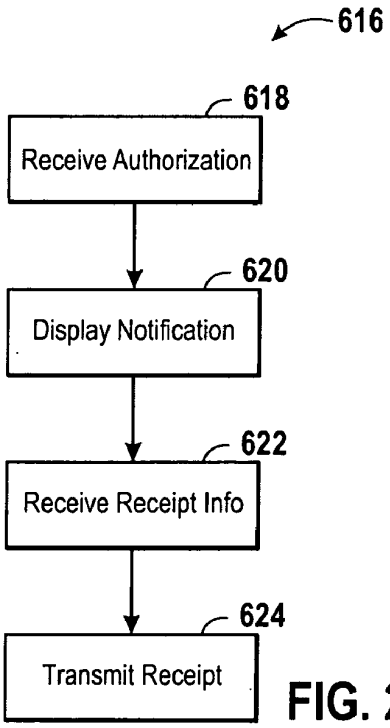
616
618
Receive Authorization
620
Display Notification
622
Receive Receipt Info
624
Transmit Receipt

FIG. 29

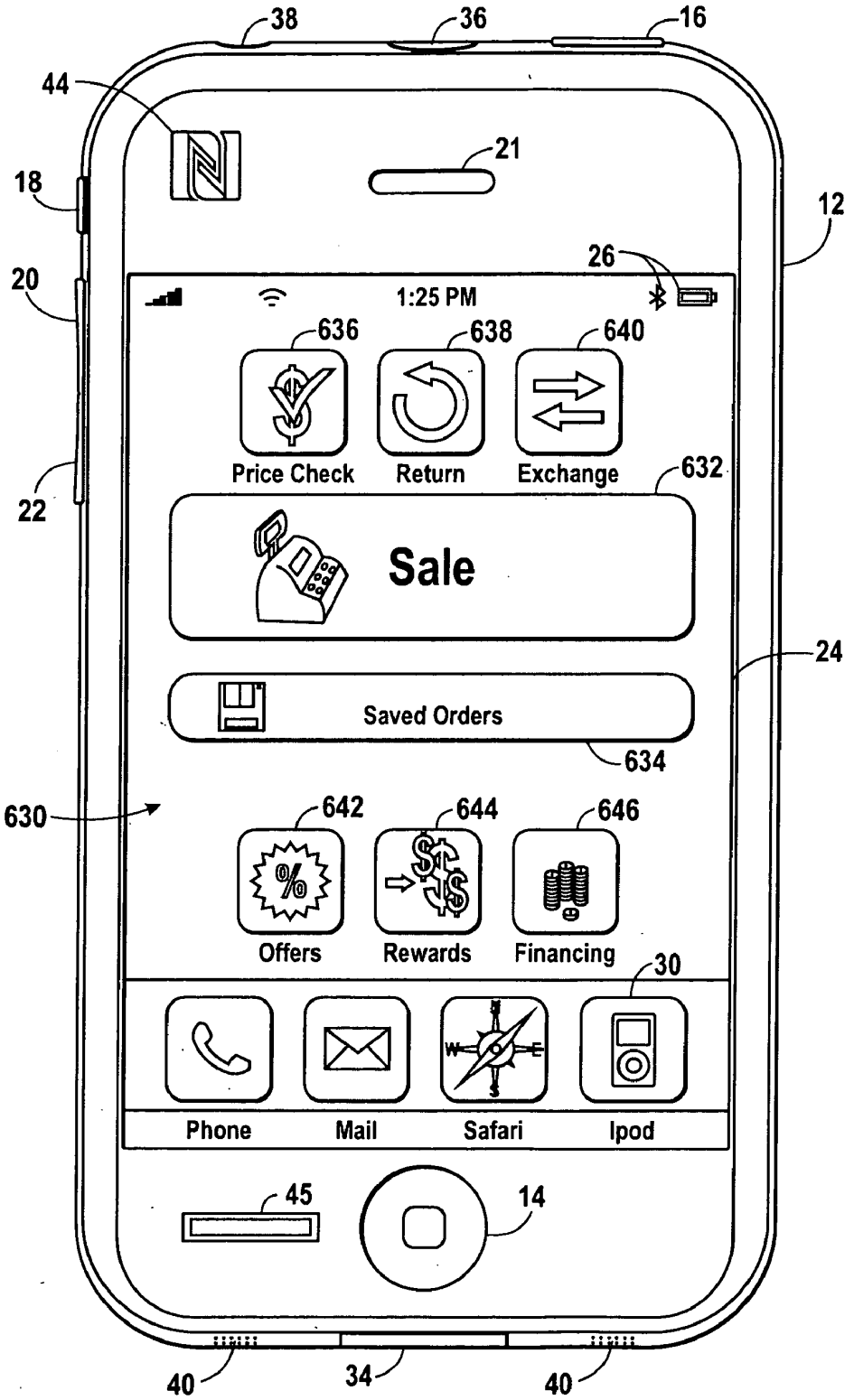
38
36
16
44
21
18
12
26
20
1:25 PM
636
638
640
Price Check
Return
Exchange
632
22
Sale
24
Saved Orders
634
630
642
644
646
Offers
Rewards
Financing
30
Phone
Mail
Safari
Ipod
45
14
40
34
40

FIG. 30

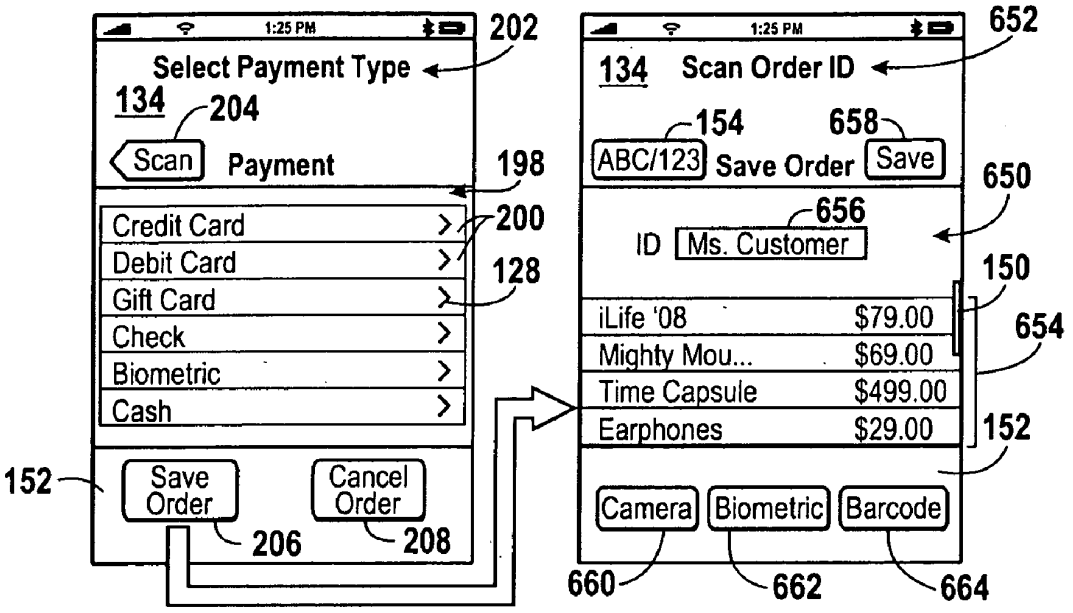
1:25 PM
Select Payment Type
134
204
Scan
Payment
202
198
Credit Card
Debit Card
Gift Card
Check
Biometric
Cash
200
128
152
Save Order
Cancel Order
206
208
1:25 PM
652
134
Scan Order ID
154
658
ABC/123
Save Order
Save
650
656
ID
Ms. Customer
150
iLife '08 $79.00
Mighty Mou... $69.00
Time Capsule $499.00
Earphones $29.00
654
152
Camera
Biometric
Barcode
660
662
664

FIG. 31

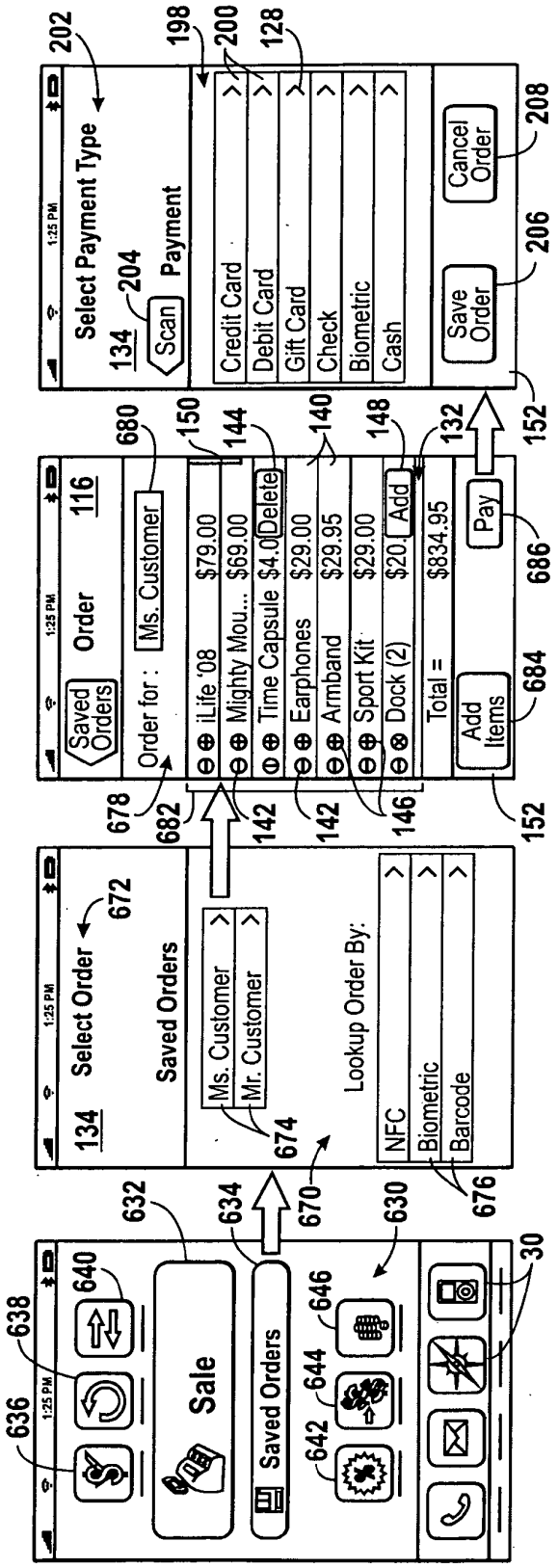
1:25 PM
Sale
Saved Orders
Select Order
134
Saved Orders
Ms. Customer
Mr. Customer
Lookup Order By:
NFC
Biometric
Barcode
Saved Orders
Order
116
Ms. Customer
iLife '08 $79.00
Mighty Mou... $69.00
Time Capsule $4.0
Delete
Earphones $29.00
Armband $29.95
Sport Kit $29.00
Dock (2) $20.
Add
Total = $834.95
Add Items
Pay
Select Payment Type
Scan
Payment
Credit Card
Debit Card
Gift Card
Check
Biometric
Cash
Save Order
Cancel Order
30
630
632
634
636
638
640
642
644
646
670
672
674
676
678
680
682
684
686
142
144
146
148
150
152
132
140
198
200
202
204
206
208
128

FIG. 32

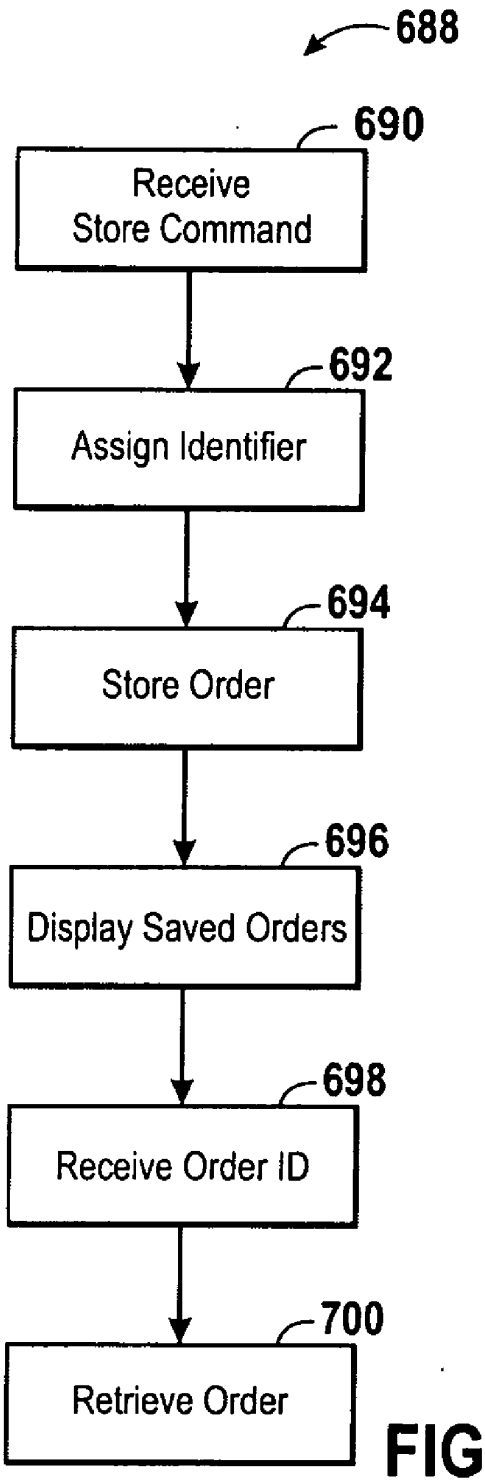
688
690
Receive Store Command
692
Assign Identifier
694
Store Order
696
Display Saved Orders
698
Receive Order ID
700
Retrieve Order

FIG. 33

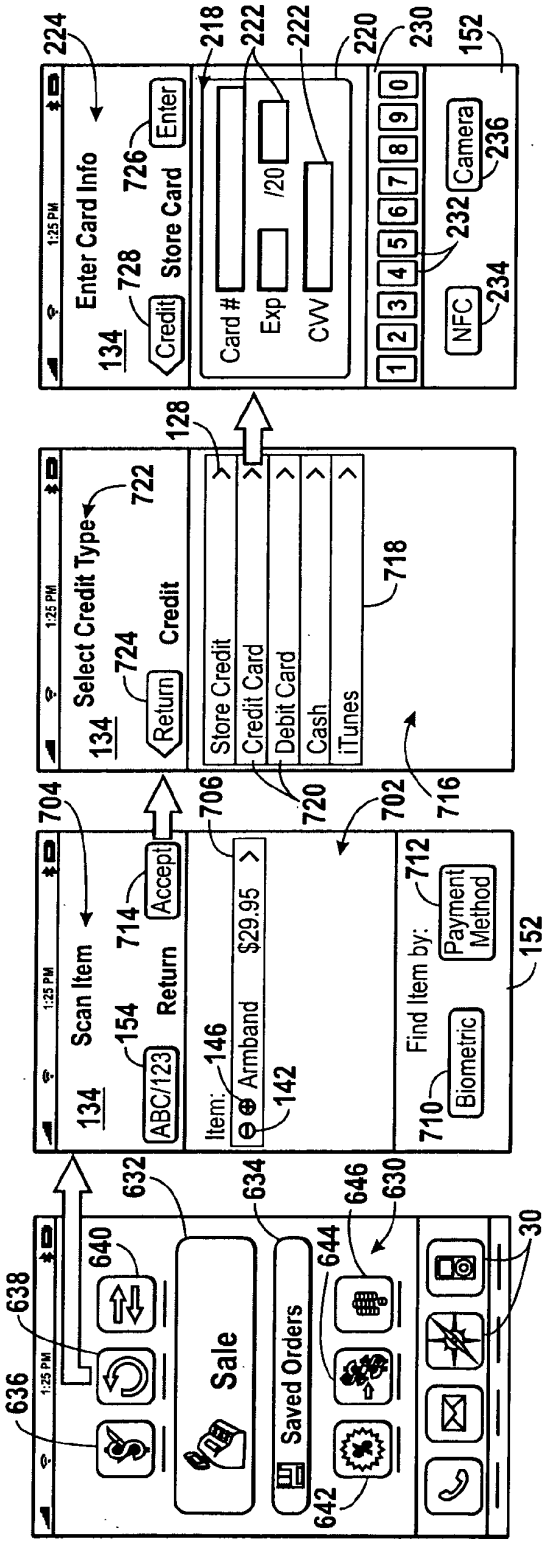
Enter Card Info
134
Credit
Store Card
Enter
Card #
Exp
/20
CVV
1 2 3 4 5 6 7 8 9 0
NFC
Camera
Select Credit Type
Return
Credit
Store Credit
Credit Card
Debit Card
Cash
iTunes
Scan Item
ABC/123
Return
Accept
Item:
Armband
$29.95
Find Item by:
Biometric
Payment Method
Sale
Saved Orders
1:25 PM

FIG. 34

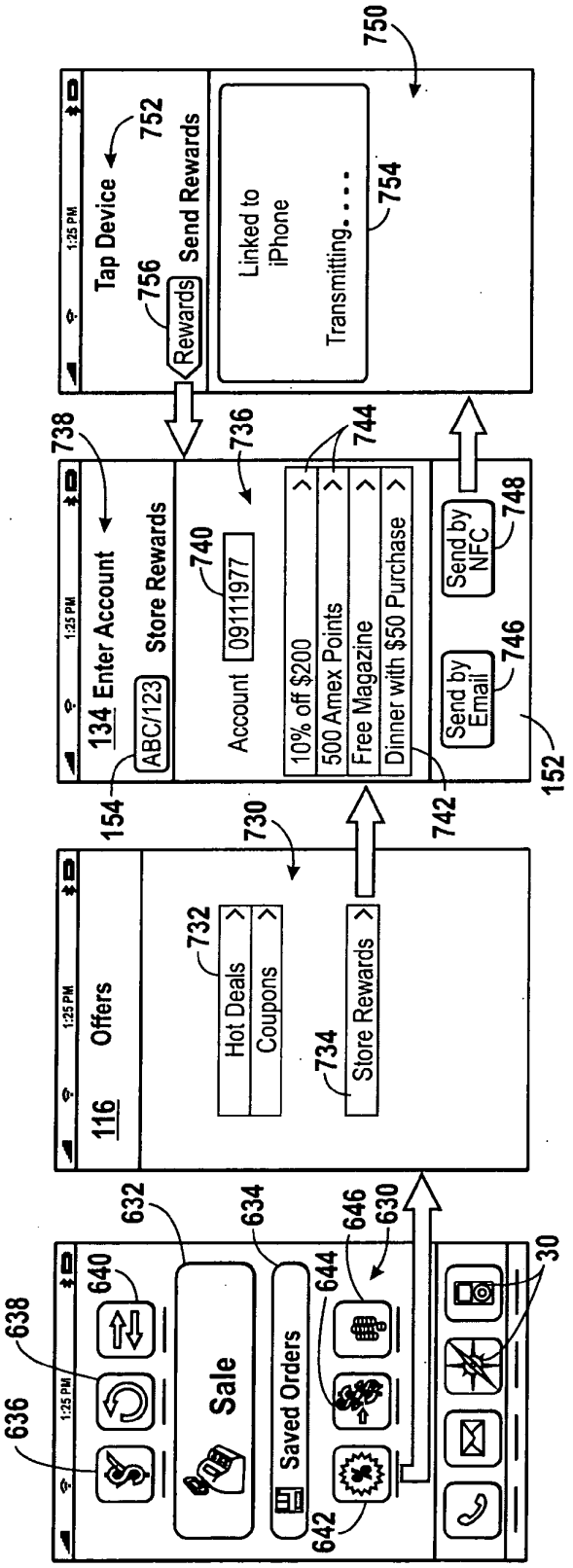
1:25 PM
Sale
Saved Orders
116 Offers
Hot Deals
Coupons
Store Rewards
134 Enter Account
ABC/123
Store Rewards
Account
09111977
10% off $200
500 Amex Points
Free Magazine
Dinner with $50 Purchase
Send by Email
Send by NFC
Tap Device
Rewards
Send Rewards
Linked to iPhone
Transmitting....
30
632
634
636
638
640
642
644
646
630
730
732
734
736
738
740
742
744
746
748
750
752
754
756
154
152

FIG. 35

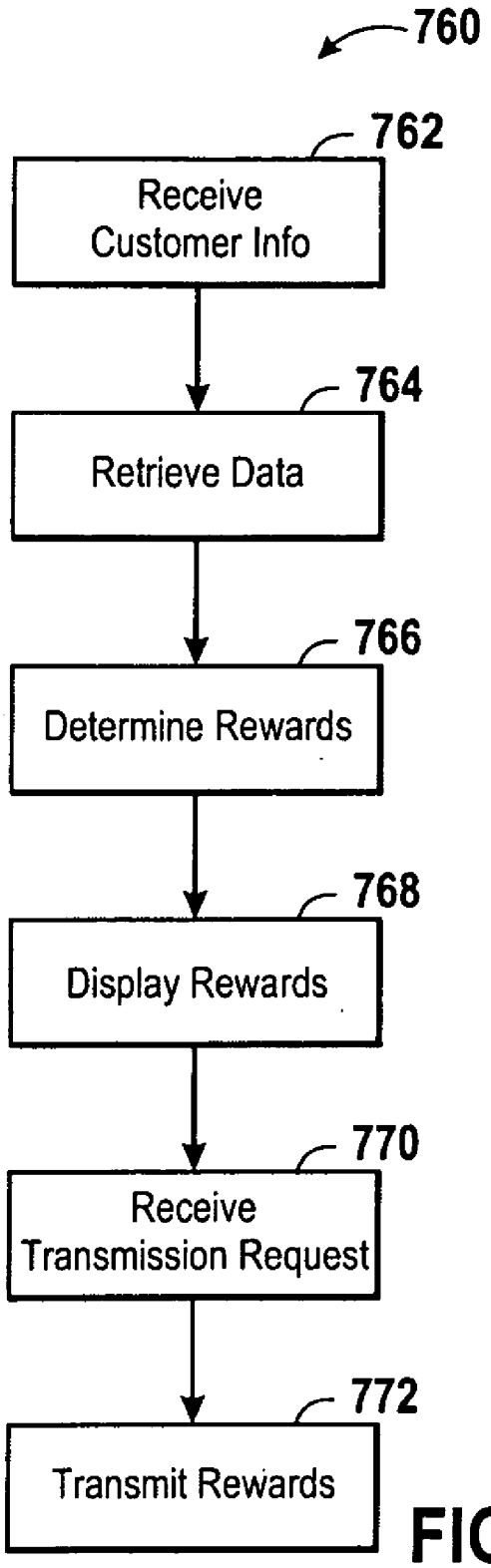
760
762
Receive Customer Info
764
Retrieve Data
766
Determine Rewards
768
Display Rewards
770
Receive Transmission Request
772
Transmit Rewards

FIG. 36

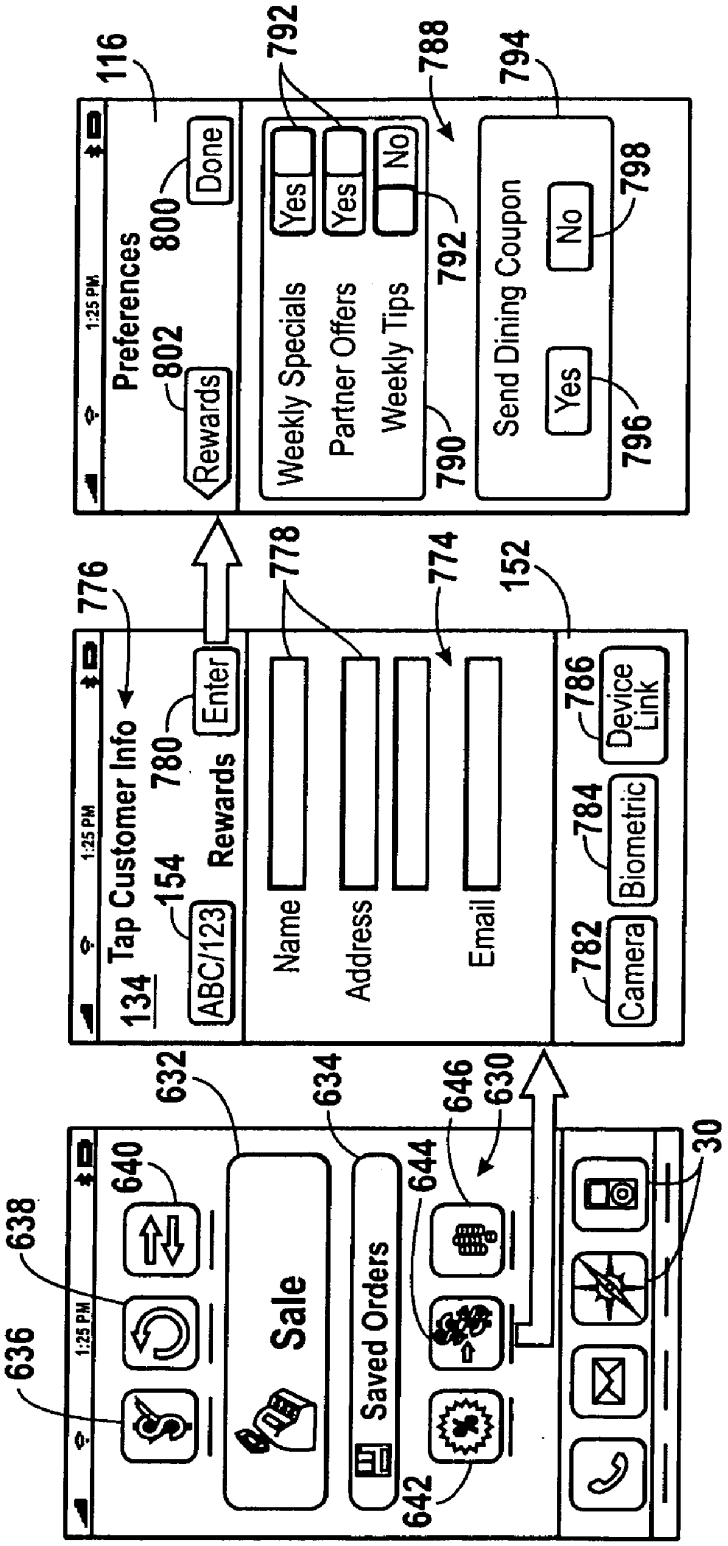
1:25 PM
Preferences
Done
Rewards
Weekly Specials
Partner Offers
Weekly Tips
Yes
Yes
No
Send Dining Coupon
Yes
No
Tap Customer Info
ABC/123
Rewards
Enter
Name
Address
Email
Camera
Biometric
Device Link
Sale
Saved Orders
116
792
788
794
800
802
792
798
790
796
776
778
774
152
134
154
780
786
784
782
632
634
646
630
638
636
640
644
642
30

FIG. 37

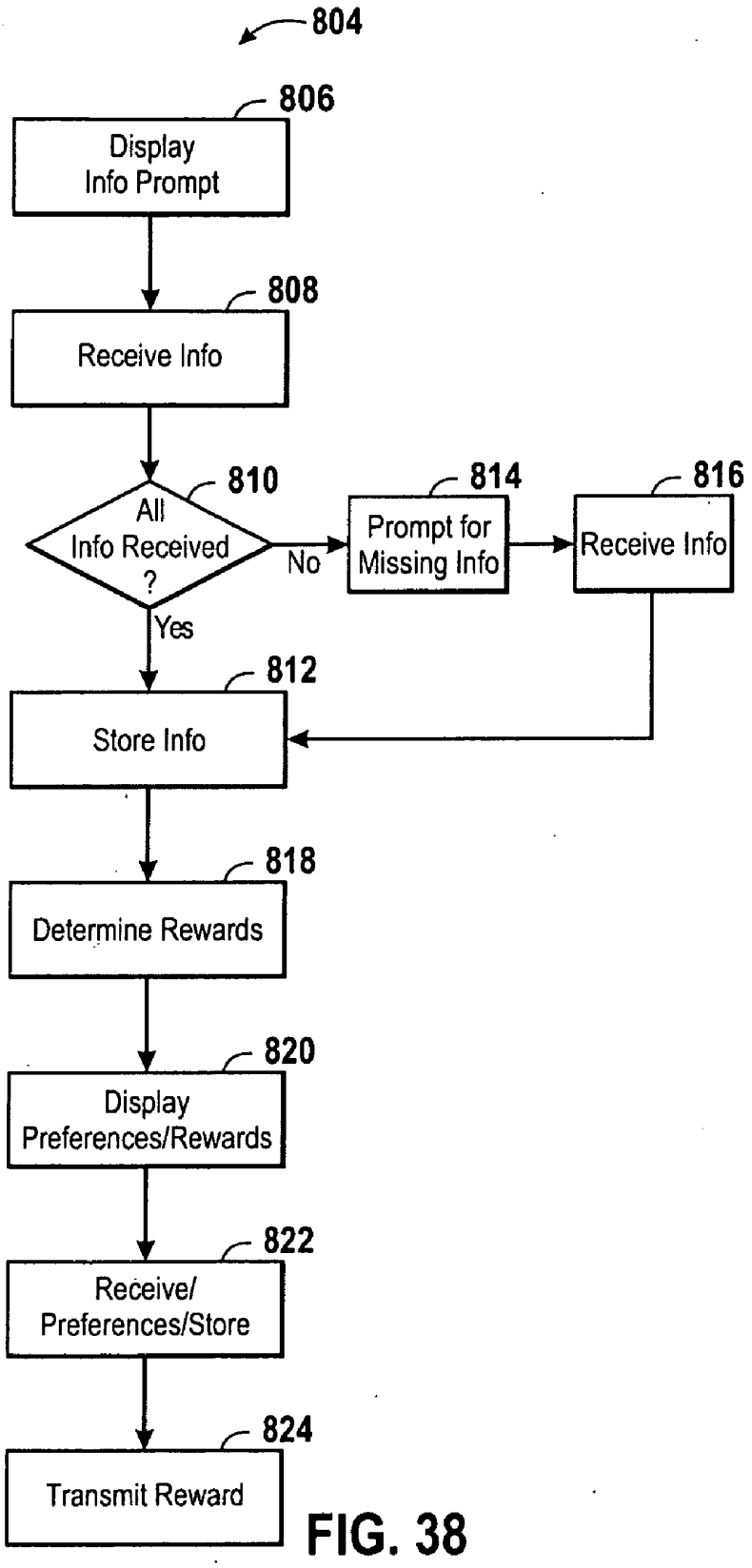
804
806
Display Info Prompt
808
Receive Info
810
All Info Received ?
No
Yes
814
Prompt for Missing Info
816
Receive Info
812
Store Info
818
Determine Rewards
820
Display Preferences/Rewards
822
Receive/ Preferences/Store
824
Transmit Reward

FIG. 38

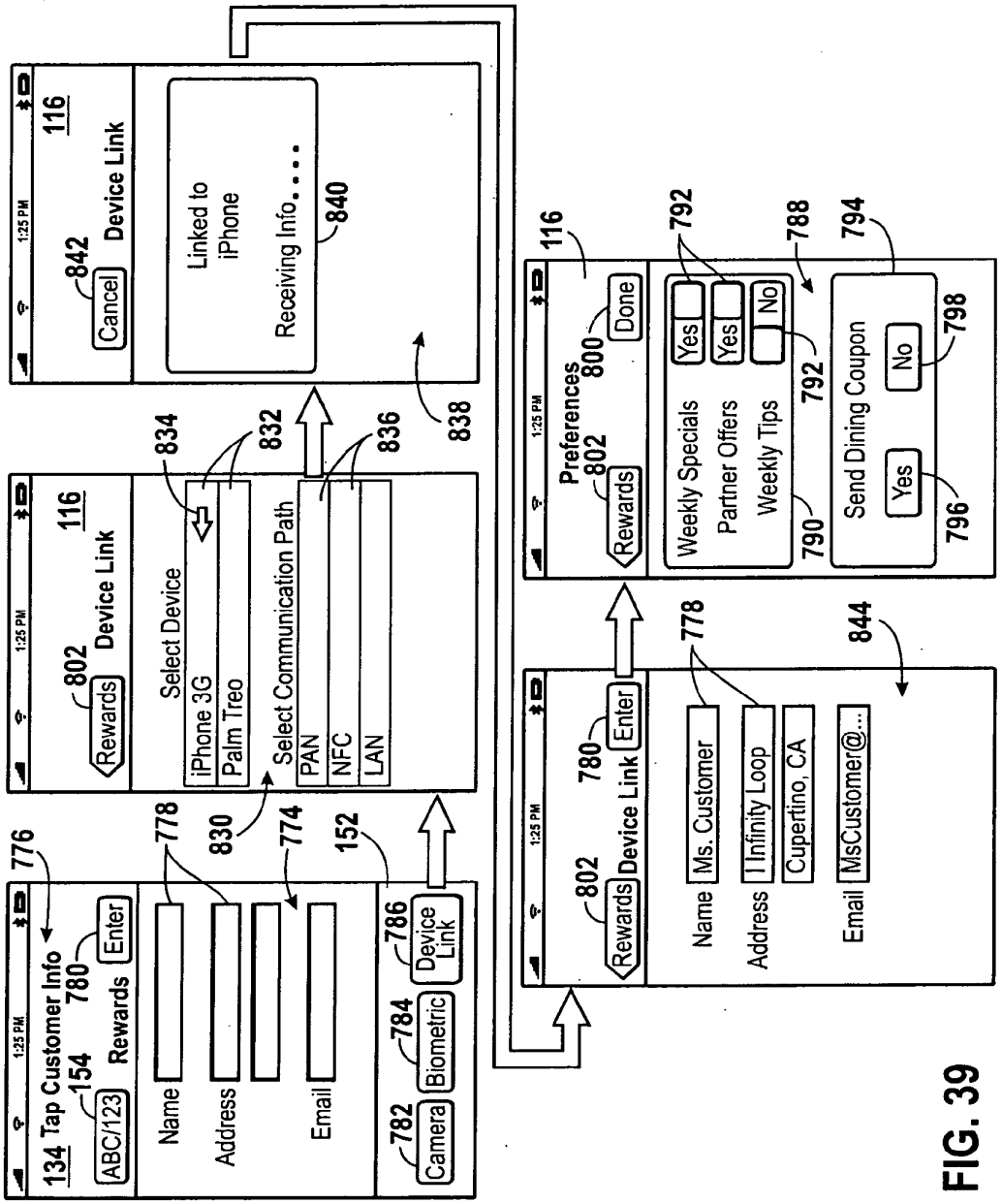
1:25 PM
134 Tap Customer Info
154
ABC/123
Rewards
780
Enter
776
Name
Address
Email
778
774
152
782
Camera
784
Biometric
786
Device Link
802
Rewards
Device Link
116
Select Device
iPhone 3G
Palm Treo
830
834
832
Select Communication Path
PAN
NFC
LAN
836
838
842
Cancel
Device Link
116
Linked to iPhone
Receiving Info....
840
802
Rewards
Device Link
780
Enter
Name
Ms. Customer
Address
1 Infinity Loop
Cupertino, CA
Email
MsCustomer@...
778
844
802
Rewards
Preferences
800
Done
116
Weekly Specials
Partner Offers
Weekly Tips
Yes
Yes
No
792
790
788
Send Dining Coupon
Yes
No
796
798
794

FIG. 39

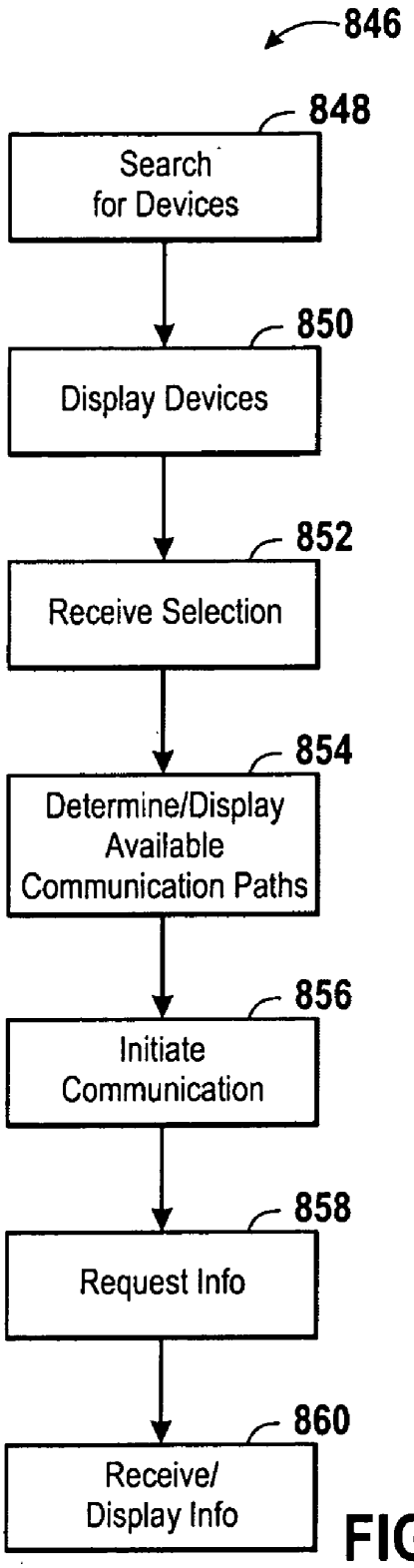
846
848
Search for Devices
850
Display Devices
852
Receive Selection
854
Determine/Display Available Communication Paths
856
Initiate Communication
858
Request Info
860
Receive/ Display Info

FIG. 40

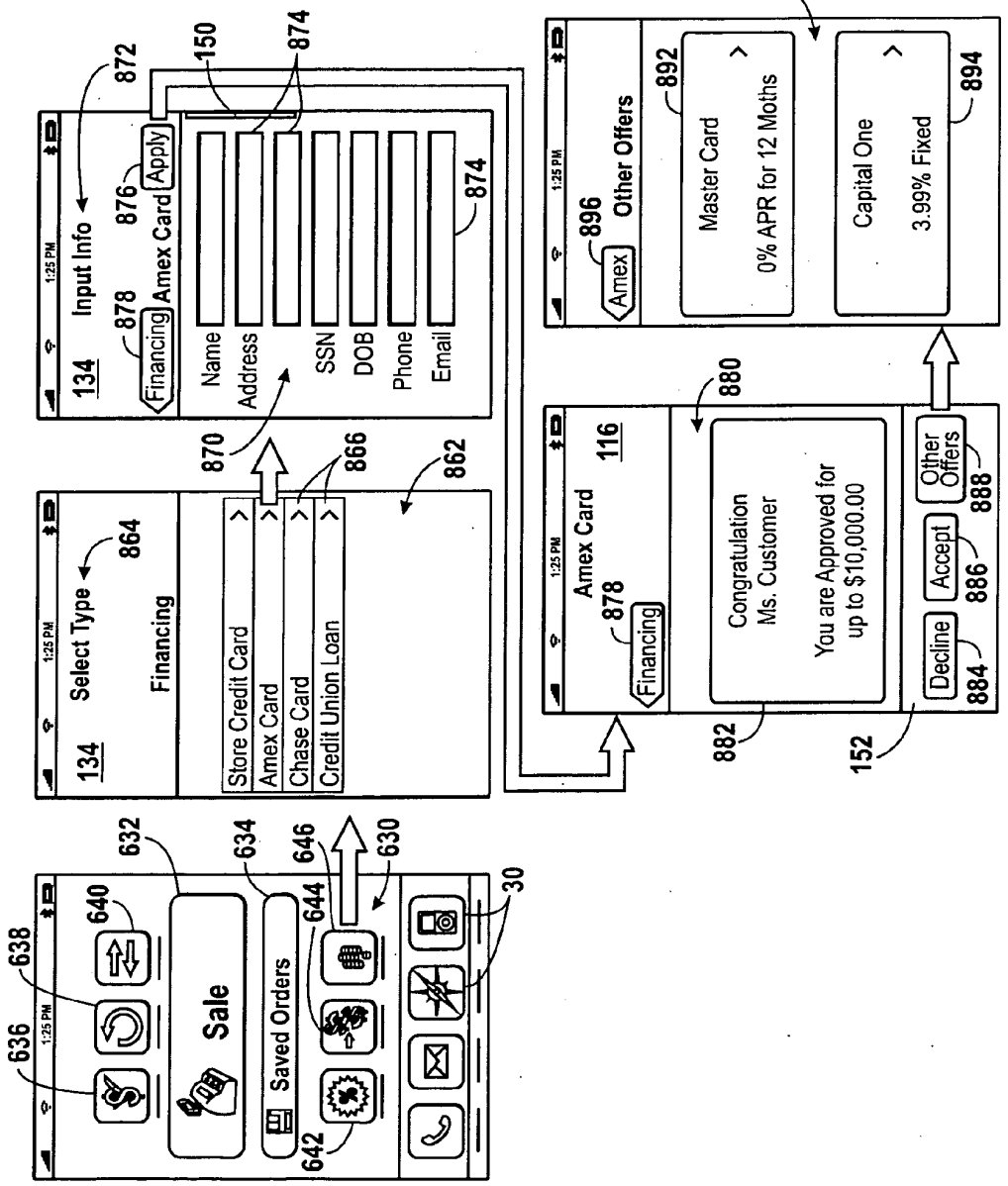
1:25 PM
Sale
Saved Orders
Select Type
134
Financing
Store Credit Card
Amex Card
Chase Card
Credit Union Loan
Input Info
Financing
Amex Card
Apply
Name
Address
SSN
DOB
Phone
Email
Amex
Other Offers
Master Card
0% APR for 12 Moths
Capital One
3.99% Fixed
116
Congratulation
Ms. Customer
You are Approved for
up to $10,000.00
Decline
Accept
Other Offers
30
150
152
630
632
634
636
638
640
642
644
646
862
864
866
870
872
874
876
878
880
882
884
886
888
890
892
894
896

FIG. 41

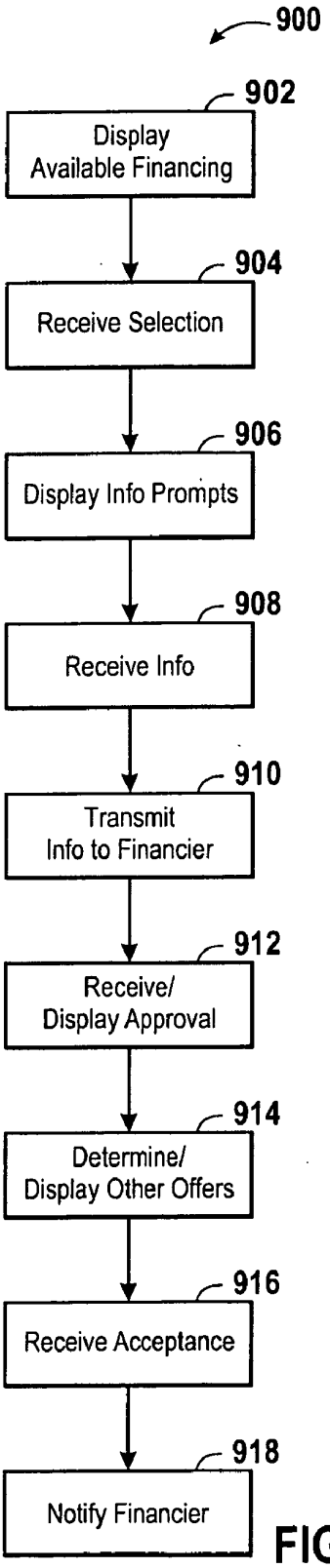
900
902
Display Available Financing
904
Receive Selection
906
Display Info Prompts
908
Receive Info
910
Transmit Info to Financier
912
Receive/ Display Approval
914
Determine/ Display Other Offers
916
Receive Acceptance
918
Notify Financier

FIG. 42

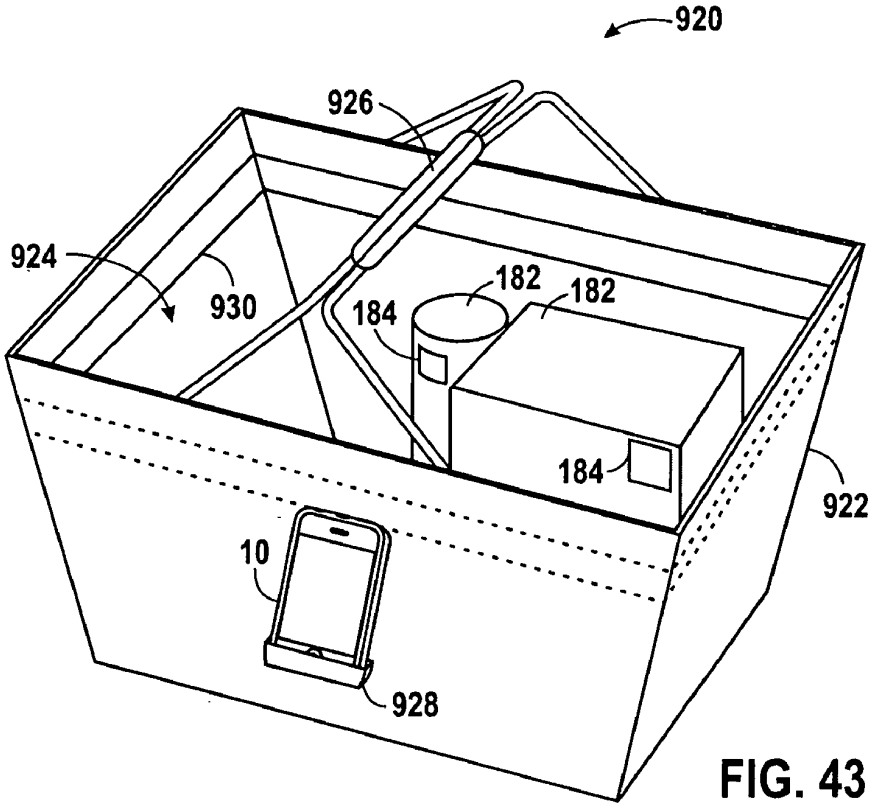
920
926
924
930
182
182
184
184
922
10
928

FIG. 43

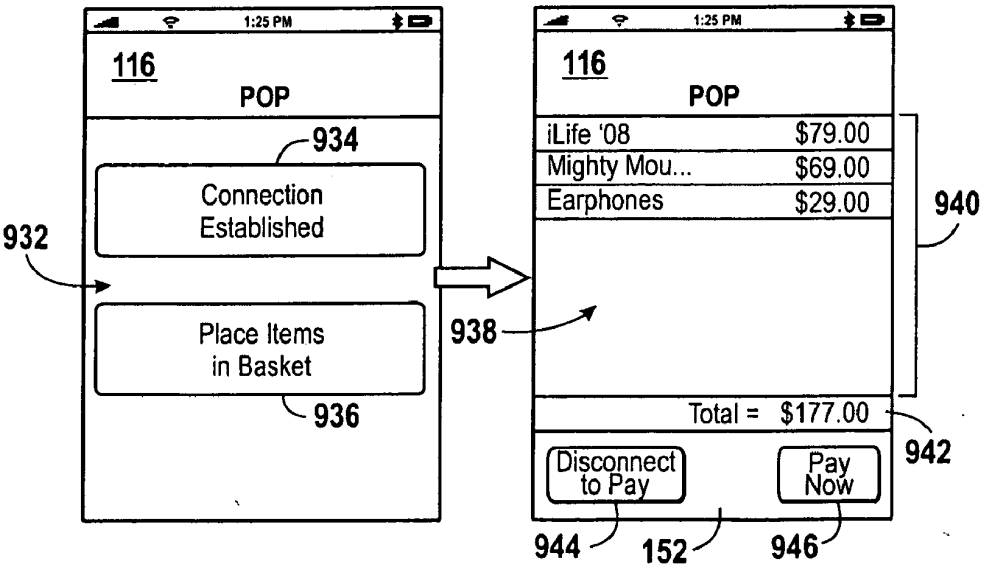
1:25 PM
116
POP
934
Connection Established
932
Place Items in Basket
936
1:25 PM
116
POP
iLife '08 $79.00
Mighty Mou... $69.00
Earphones $29.00
940
938
Total = $177.00
942
Disconnect to Pay
Pay Now
944
152
946

FIG. 44

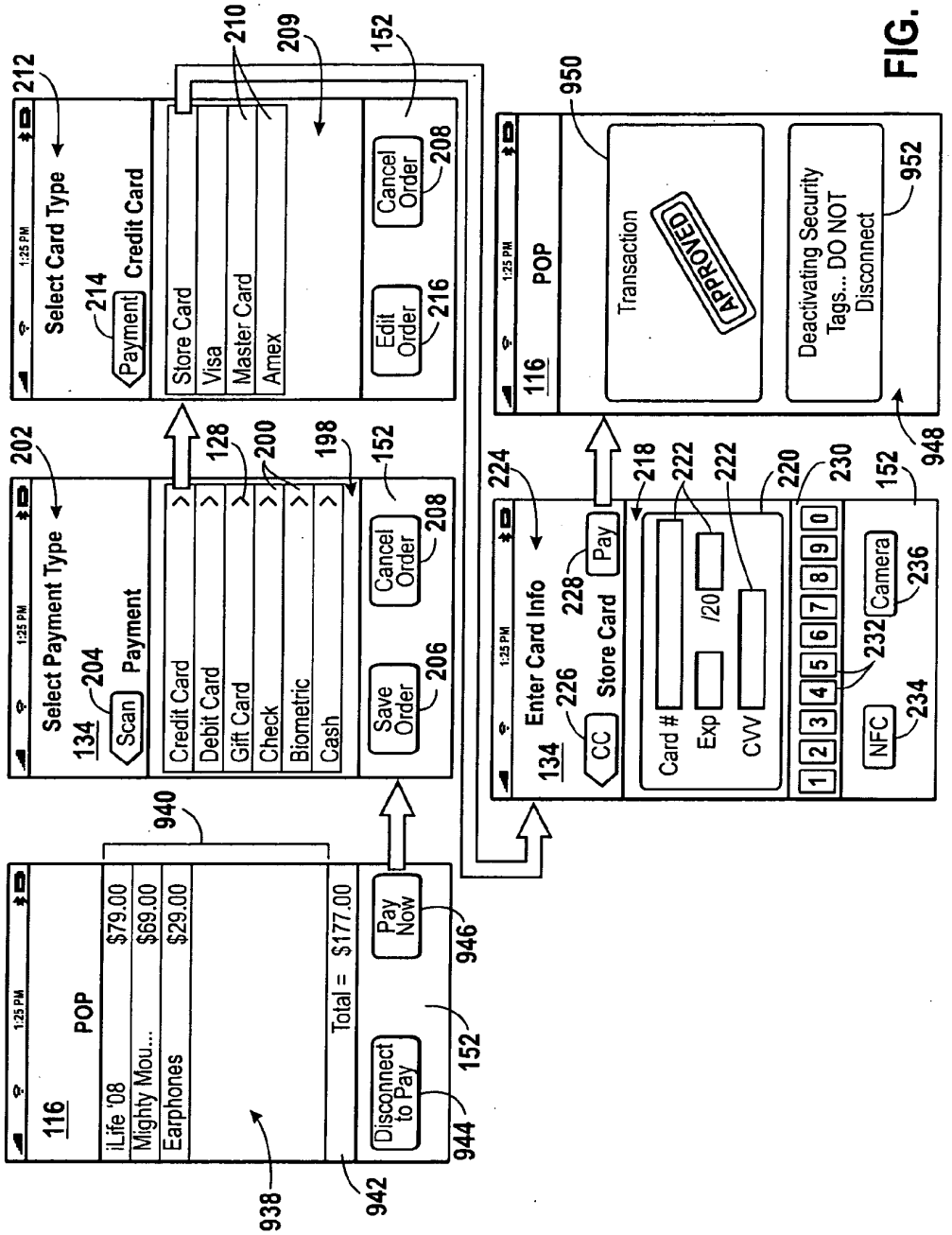
1:25 PM
116
POP
iLife '08
$79.00
Mighty Mou...
$69.00
Earphones
$29.00
Total = $177.00
Disconnect to Pay
Pay Now
938
940
942
944
946
152
Select Payment Type
134
Scan
204
Payment
202
Credit Card
Debit Card
Gift Card
Check
Biometric
Cash
128
200
198
Save Order
206
Cancel Order
208
Select Card Type
212
214
Payment
Credit Card
Store Card
Visa
Master Card
Amex
210
209
Edit Order
216
Enter Card Info
224
226
CC
Store Card
228
Pay
218
Card #
Exp
/20
CVV
222
220
230
1 2 3 4 5 6 7 8 9 0
232
NFC
234
Camera
236
Transaction
APPROVED
950
Deactivating Security Tags... DO NOT Disconnect
952
948

FIG. 45

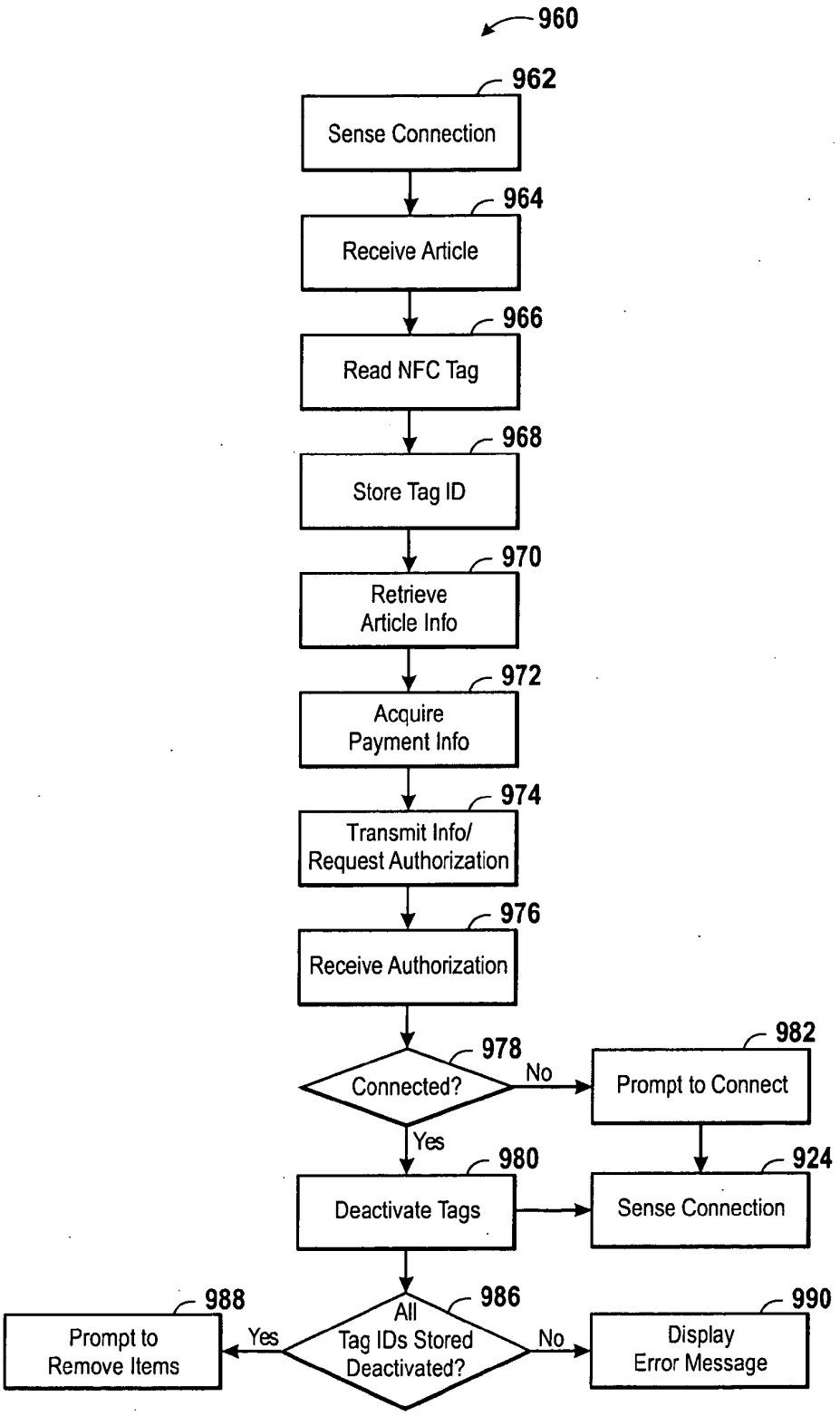
960
962
Sense Connection
964
Receive Article
966
Read NFC Tag
968
Store Tag ID
970
Retrieve Article Info
972
Acquire Payment Info
974
Transmit Info/ Request Authorization
976
Receive Authorization
978
Connected?
No
982
Prompt to Connect
Yes
980
Deactivate Tags
924
Sense Connection
986
All Tag IDs Stored Deactivated?
Yes
988
Prompt to Remove Items
No
990
Display Error Message

FIG. 46

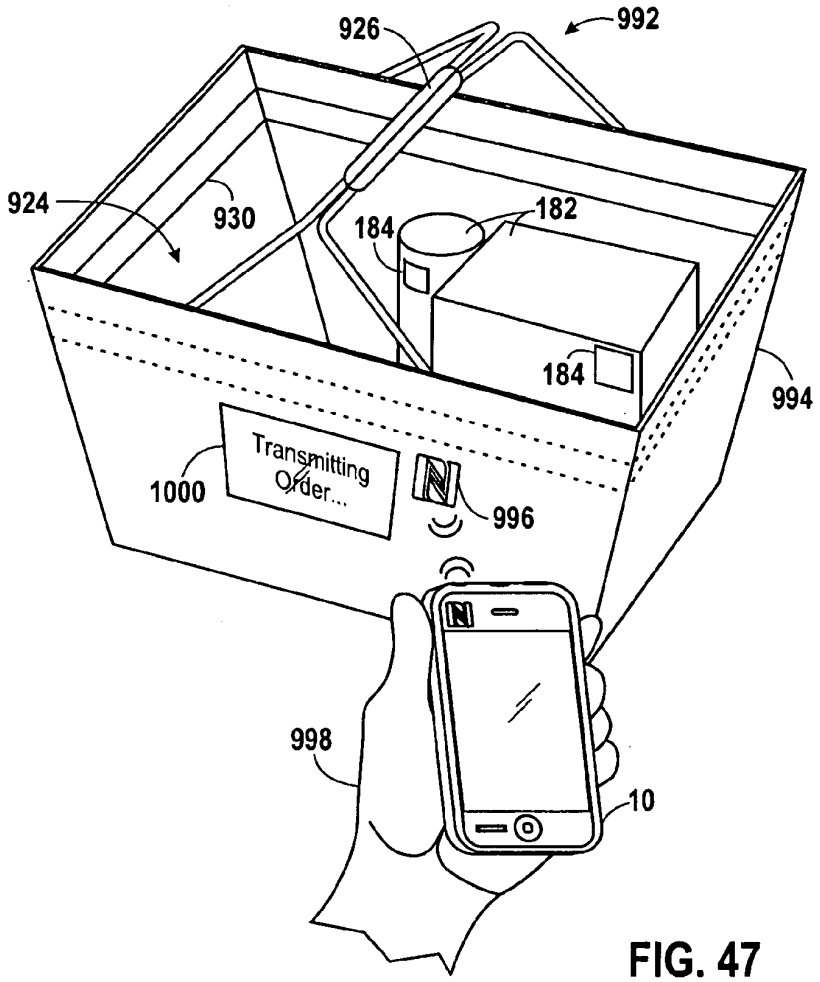
992
926
924
930
184
182
184
994
Transmitting Order...
1000
996
998
10

FIG. 47

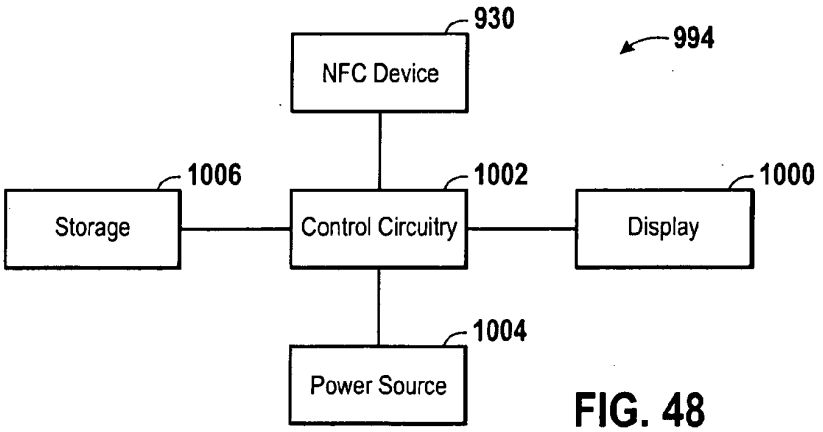
930
994
NFC Device
1006
1002
1000
Storage
Control Circuitry
Display
1004
Power Source

FIG. 48

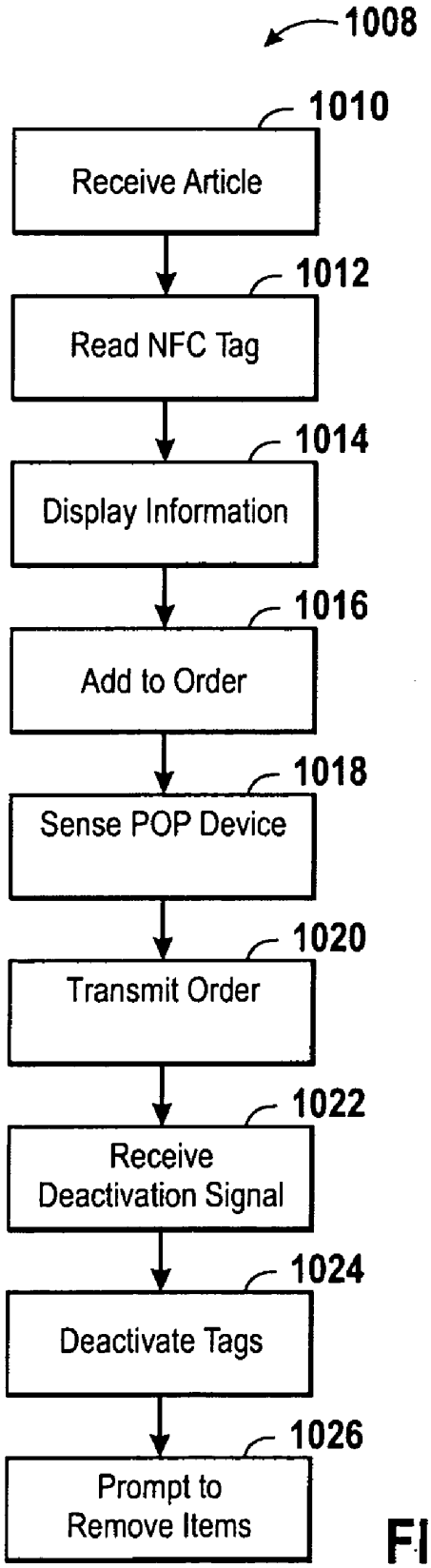
1008
1010
Receive Article
1012
Read NFC Tag
1014
Display Information
1016
Add to Order
1018
Sense POP Device
1020
Transmit Order
1022
Receive Deactivation Signal
1024
Deactivate Tags
1026
Prompt to Remove Items

FIG. 49

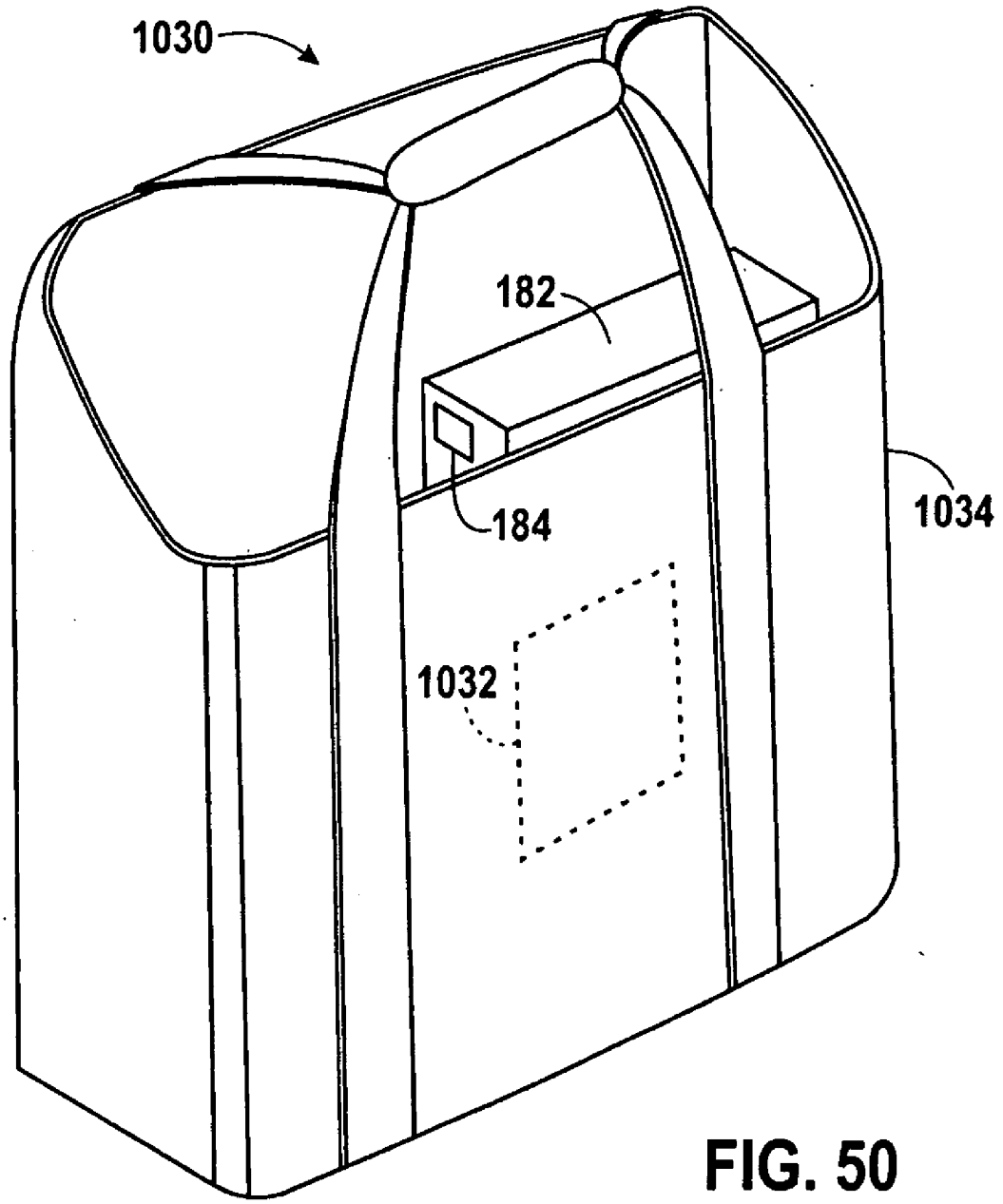

FIG. 50

PORTABLE POINT OF PURCHASE DEVICES AND METHODS

BACKGROUND OF THE INVENTION

[0001] 1. Field of the Invention

[0002] Embodiments of the present disclosure relate generally to handheld electronic devices and, more particularly, to electronic devices configured to conduct sales transactions.

[0003] 2. Description of the Related Art

[0004] This section is intended to introduce the reader to various aspects of art that may be related to various aspects of the present disclosure, which are described and/or claimed below. This discussion is believed to be helpful in providing the reader with background information to facilitate a better understanding of the various aspects of the present invention. Accordingly, it should be understood that these statements are to be read in this light, and not as admissions of prior art.

[0005] Merchants often use point-of-sale or point-of-purchase (POP) systems to complete sales transactions. Typical POP systems may include several independent devices, each performing a different function. For example, a scanner may ring up articles of merchandise and transmit the amount to a cash register to calculate the amount due. The cash register may then transmit the amount due to a credit card reader to receive payment.

[0006] The use of multiple devices often results in an immobile POP system due to device sizes and communication requirements. The fixed location of a POP system also may decrease operational flexibility and create time-consuming sales transactions. Today's fast-paced consumers may be unwilling or unable to wait to purchase merchandise, resulting in lost sales and profits for the merchant. Further, sales transactions frequently occur outside of the traditional retail environment in mobile locations. For example, consumers may purchase food, drinks, and magazines on an airplane or subway.

SUMMARY

[0007] Certain aspects of embodiments disclosed herein by way of example are summarized below. It should be understood that these aspects are presented merely to provide the reader with a brief summary of certain forms an invention disclosed and/or claimed herein might take and that these aspects are not intended to limit the scope of any invention disclosed and/or claimed herein. Indeed, any invention disclosed and/or claimed herein may encompass a variety of aspects that may not be set forth below.

[0008] The present disclosure generally relates to techniques for performing sales transactions using a portable device. In accordance with one disclosed embodiment, a portable electronic device may be capable of completing an entire sales transaction including ringing up articles of merchandise, receiving payment information, and communicating with an external server to receive authorization for payment. The electronic device may include input devices, such as a near field communication (NFC) interface, camera, and scanner, for retrieving article information and payment information. The electronic device also may use a device identification networking protocol to establish a communication link with another device in order to receive payment information. A software application of the device may calculate the amount due and may retrieve inventory and price information from the merchant's server.

[0009] The electronic device also may include one or more communication interfaces for communicating with the merchant's server over a wireless network, personal area network, near field communication channel, or the like. In certain embodiments, the electronic device may use a smart selection method to determine the most suitable communication interface based on data transmission speed, security features, and other user preferences. The electronic device also may include applications for performing various sales related transactions such as exchanging information for a merchant rewards program, establishing customer financing, and performing returns and exchanges.

[0010] Various refinements of the features noted above may exist in relation to various aspects of the present disclosure. Further features may also be incorporated in these various aspects as well. These refinements and additional features may exist individually or in any combination. For instance, various features discussed below in relation to one or more of the illustrated embodiments may be incorporated into any of the above-described aspects alone or in any combination. Again, the brief summary presented above is intended only to familiarize the reader with certain aspects and contexts of embodiments of the present disclosure without limitation to the claimed subject matter.

BRIEF DESCRIPTION OF THE DRAWINGS

[0011] These and other features, aspects, and advantages of the present disclosure will become better understood when the following detailed description is read with reference to the accompanying drawings in which like characters represent like parts throughout the drawings, wherein:

[0012] FIG. **1** is a front view of a portable electronic device in accordance with one embodiment;

[0013] FIG. **2** is a rear view of the portable electronic device of FIG. **1** in accordance with one embodiment;

[0014] FIG. **3** is a simplified block diagram of the device of FIGS. **1** and **2** in accordance with one embodiment;

[0015] FIG. **4** is a diagrammatical representation of a system for conducting a sales transaction in accordance with one embodiment;

[0016] FIG. **5** is a flowchart depicting a method for conducting a sales transaction in accordance with one embodiment;

[0017] FIG. **6** is a front view of screens of the device of FIG. **1** illustrating a method of ringing up merchandise in accordance with one embodiment;

[0018] FIG. **7** is an illustration of a near field communication (NFC) based sales transaction in accordance with one embodiment;

[0019] FIG. **8** is a flowchart depicting a method for acquiring article information through an NFC based transaction in accordance with one embodiment;

[0020] FIG. **9** is a front view of screens of the device of FIG. **1** illustrating a method of acquiring payment information in accordance with one embodiment;

[0021] FIG. **10** is a front view of screens of the device of FIG. **1** illustrating a method of acquiring payment information from a credit card in accordance with one embodiment;

[0022] FIG. **11** is a front view of screens of the device of FIG. **1** illustrating a method of acquiring payment information using near field communication in accordance with one embodiment;

[0023] FIG. **12** is a flowchart depicting a method for acquiring payment information using near field communication in accordance with one embodiment;

[0024] FIG. **13** is a front view of screens of the device of FIG. **1** illustrating a method of acquiring payment information using a camera in accordance with one embodiment;

[0025] FIG. **14** is a flowchart depicting a method for acquiring payment information in accordance with one embodiment;

[0026] FIG. **15** is a front view of screens of the device of FIG. **1** illustrating a method of acquiring payment information from a check in accordance with one embodiment;

[0027] FIG. **16** is a front view of screens of the device of FIG. **1** illustrating a method of acquiring payment information from biometric data in accordance with one embodiment;

[0028] FIG. **17** is a flowchart depicting a method for acquiring payment information based on biometric data in accordance with one embodiment;

[0029] FIG. **18** shows screens of the device of FIG. **1** illustrating a method of receiving a cash payment in accordance with one embodiment;

[0030] FIG. **19** is a flowchart depicting a method for receiving a cash payment in accordance with one embodiment;

[0031] FIG. **20** is a front view of screens of the device of FIG. **1** illustrating a method of selecting rewards in accordance with one embodiment;

[0032] FIG. **21** is a flowchart depicting a method of selecting rewards in accordance with one embodiment;

[0033] FIG. **22** is a diagrammatical representation of communication channels for conducting a sales transaction in accordance with one embodiment;

[0034] FIG. **23** is a diagrammatical representation of communication channels for conducting a sales transaction in accordance with one embodiment;

[0035] FIG. **24** is a diagrammatical representation of communication channels for conducting a sales transaction in accordance with one embodiment;

[0036] FIG. **25** is a front view of screens of the device of FIG. **1** illustrating a method of setting communication channel preferences in accordance with one embodiment;

[0037] FIG. **26** is a flowchart depicting a method of transmitting information in accordance with one embodiment;

[0038] FIG. **27** is a perspective view of an intermediate device in accordance with one embodiment;

[0039] FIG. **28** is a flowchart depicting a method of transmitting authorization in accordance with one embodiment;

[0040] FIG. **29** is a flowchart depicting a method of receiving authorization in accordance with one embodiment;

[0041] FIG. **30** is a front view of a portable electronic device illustrating another home screen for conducting sales transactions in accordance with one embodiment;

[0042] FIG. **31** is a front view of screens of the device of FIG. **30** illustrating a method of saving an order in accordance with one embodiment;

[0043] FIG. **32** is a front view of screens of the device of FIG. **30** illustrating a method of retrieving a saved order in accordance with one embodiment;

[0044] FIG. **33** is a flowchart depicting a method of retrieving a saved order in accordance with one embodiment;

[0045] FIG. **34** is a front view of screens of the device of FIG. **30** illustrating a method of processing a return in accordance with one embodiment;

[0046] FIG. **35** is a front view of screens of the device of FIG. **30** illustrating a method of transmitting rewards in accordance with one embodiment;

[0047] FIG. **36** is a flowchart depicting a method of transmitting rewards in accordance with one embodiment;

[0048] FIG. **37** is a front view of screens of the device of FIG. **30** illustrating a method of transmitting rewards in accordance with one embodiment;

[0049] FIG. **38** is a flowchart depicting a method of transmitting rewards in accordance with one embodiment;

[0050] FIG. **39** is a front view of screens of the device of FIG. **30** illustrating a method of linking devices in accordance with one embodiment;

[0051] FIG. **40** is a flowchart depicting a method of linking devices in accordance with one embodiment;

[0052] FIG. **41** is a front view of screens of the device of FIG. **30** illustrating a method of determining financing in accordance with one embodiment;

[0053] FIG. **42** is a flowchart depicting a method of determining financing in accordance with one embodiment;

[0054] FIG. **43** is a perspective view of a POP device incorporating the electronic device of FIG. **1**;

[0055] FIG. **44** is a front view of screens of the electronic device of FIG. **43** in accordance with one embodiment;

[0056] FIG. **45** is a front view of screens of the device of FIG. **43** illustrating a method of receiving payment in accordance with one embodiment;

[0057] FIG. **46** is a flowchart depicting a method of conducting a sales transaction in accordance with one embodiment;

[0058] FIG. **47** is a perspective view of another POP device incorporating the electronic device of FIG. **1** in accordance with one embodiment;

[0059] FIG. **48** is a simplified block diagram of the POP device of FIG. **47** in accordance with one embodiment;

[0060] FIG. **49** is a flowchart depicting a method of determining conducting a sales transaction in accordance with one embodiment; and

[0061] FIG. **50** is a perspective view of another POP device in accordance with one embodiment.

DETAILED DESCRIPTION OF SPECIFIC EMBODIMENTS

[0062] One or more specific embodiments of the present invention will be described below. These described embodiments are only exemplary of the present invention. Additionally, in an effort to provide a concise description of these exemplary embodiments, all features of an actual implementation may not be described in the specification. It should be appreciated that in the development of any such actual implementation, as in any engineering or design project, numerous implementation-specific decisions must be made to achieve the developers' specific goals, such as compliance with system-related and business-related constraints, which may vary from one implementation to another. Moreover, it should be appreciated that such a development effort might be complex and time consuming, but would nevertheless be a routine undertaking of design, fabrication, and manufacture for those of ordinary skill having the benefit of this disclosure.

[0063] The present disclosure is directed to techniques for conducting a sales transaction using a handheld, portable electronic device. The handheld electronic device integrates several functionalities for performing sales transactions, including but not limited to, retrieving merchandise informa-

tion, acquiring payment information, and obtaining payment authorization. One or more input devices, such as a scanner, camera, keypad, or near field communication (NFC) device, may be used to acquire merchandise information and payment information. For example, a NFC device may be used to scan an article of merchandise and a camera may be used to receive credit card information. The handheld electronic device may communicate with an internal memory and/or an external server to acquire price information and payment authorization through a selected communication channel, such as a wide area network (WAN), local area network (LAN), personal area network (PAN), or near field communication channel. The electronic device may display a notification authorizing the sales transaction. The electronic device also may provide additional functionalities, such as exchanging information for a merchant rewards program, transmitting receipts, and obtaining financing.

[0064] FIG. **1** illustrates an electronic device **10** that may make use of the techniques for conducting a sales transaction described above. As illustrated in FIG. **1**, the electronic device **10** may be a handheld device incorporating the functionality of one or more portable devices, such as a media player, a cellular phone, a personal data organizer, and so forth. Depending, of course, on the functionalities provided by the electronic device **10**, a user may scan articles of merchandise, listen to music, play games, record video, take pictures, and place telephone calls, while moving freely with the device **10**. In addition, the electronic device **10** may allow a user to connect to and communicate through the Internet or through other networks, such as local or wide area networks. For example, the electronic device **10** may allow a user to communicate using e-mail, text messaging, instant messaging, or other forms of electronic communication. The electronic device **10** also may communicate with other devices using short-range connections, such as Bluetooth and near field communication. By way of example, the electronic device **10** may be a model of an iPhone®, or a derivative thereof provided for sales transactions, available from Apple Inc. of Cupertino, Calif.

[0065] In the depicted embodiment, the device **10** includes an enclosure **12** that protects the interior components from physical damage and shields them from electromagnetic interference. The enclosure **12** may be formed from any suitable material such as plastic, metal or a composite material and may allow certain frequencies of electromagnetic radiation to pass through to wireless communication circuitry within the device **10** to facilitate wireless communication.

[0066] The enclosure **12** allows access to user input structures **14**, **16**, **18**, **20**, and **22** through which a user may interface with the device. Each user input structure **14**, **16**, **18**, **20**, and **22** may be configured to control a device function when actuated. For example, the input structure **14** may include a button that when pressed causes a "home" screen or menu to be displayed on the device. The input structure **16** may include a button for toggling the device **10** between a sleep mode and a wake mode. The input structure **18** may include a two-position slider that silences a ringer for the cell phone application. The input structures **20** and **22** may include buttons for increasing and decreasing the volume output of the device **10**. In general, the electronic device **10** may include any number of user input structures existing in various forms including buttons, switches, control pads, keys, knobs, scroll wheels, or other suitable forms.

[0067] The device **10** also includes a display **24** that may display various images generated by the device. For example, the display **24** may show photos of merchandise, advertisements, movies, and/or data, such as text documents, work schedules, financial spreadsheets, text messages, and e-mail, among other things. The display **24** also may display system indicators **26** that provide feedback to a user, such as power status, signal strength, call status, external device connection, and the like. The display **24** may be any type of display such as a liquid crystal display (LCD), a light emitting diode (LED) display, an organic light emitting diode (OLED) display, or other suitable display. Additionally, the display **24** may include a touch-sensitive element, such as a touch screen.

[0068] The display **24** may be used to display a graphical user interface (GUI) **28** that allows a user to interact with the device. The GUI **28** may include various layers, windows, screens, templates, elements, or other components that may be displayed in all, or a portion, of the display **24**. Generally, the GUI **28** may include graphical elements that represent applications and functions of the device **10**. The graphical elements may include icons and other images representing buttons, sliders, menu bars, and the like. In certain embodiments, the user input structure **14** may be used to display a home screen of the GUI **28**. For example, in response to actuation of the input structure **14**, the device may display graphical elements, shown here as icons **30**, of the GUI **28**. The icons **30** may correspond to various applications of the device **10** that may open upon selection of an icon **30**. The icons **30** may be selected via a touch screen included in the display **24**, or may be selected by user input structures, such as a wheel or button.

[0069] The icons **30** may represent various layers, windows, screens, templates, elements, or other components that may be displayed in some or all of the areas of the display **24** upon selection by the user. Furthermore, selection of an icon **30** may lead to a hierarchical navigation process, such that selection of an icon **30** leads to a screen that includes one or more additional icons or other GUI elements. Textual indicators **31** may be displayed on or near the icons **30** to facilitate user interpretation of each icon **30**. It should be appreciated that the GUI **30** may include various components arranged in hierarchical and/or non-hierarchical structures.

[0070] When an icon **30** is selected, the device **10** may be configured to open an application associated with that icon and display a corresponding screen. For example, when the Point of Purchase (POP) icon **32** is selected, the device **10** may be configured to open an application for conducting a sales transaction. The application may facilitate sales based transactions such as scanning an article of merchandise, receiving payment information, and retrieving customer information. For each application, screens including additional icons or other GUI elements may be displayed on the display **24**. Of course, if the device **10** is configured to be used solely or primarily for sales transactions, the POP icon **32** may not be present, as the related application may already be loaded and running at device startup.

[0071] The electronic device **10** also may include various input and output (I/O) ports **34**, **36**, and **38** that allow connection of the device **10** to external devices. The I/O port **34** may be a connection port for transmitting and receiving data files, such as media files or customer order files. For example, the I/O port **34** may be a proprietary port from Apple Inc. In certain embodiments, the I/O port **34** may be used to connect

an external scanning device, such as a barcode reader. The I/O port **36** may be a connection slot for receiving a subscriber identify module (SIM) card. The I/O port **38** may be a headphone jack for connecting audio headphones. In other embodiments, the device **10** may include any number of I/O ports configured to connect to a variety of external devices, including but not limited to a power source, a printer, a computer, and an intermediate device, such as a dock, for communicating with an external server. In certain embodiments, multiple ports may be included on the device. The ports may be any interface type, such as a universal serial bus (USB) port, serial connection port, Firewire port, IEEE-1394 port, or AC/DC power connection port.

[0072] The electronic device **10** may also include various audio input and output structures **40** and **42**. For example, the audio input structures **40** may include one or more microphones for receiving voice data from a user. The audio output structures **42** may include one or more speakers for outputting audio data, such as data received by the device **10** over a cellular network. Together, the audio input and output structures **40** and **42** may operate to provide telephone functionality. Further, in some embodiments, the audio input structures **40** may include one or more integrated speakers serving as audio output structures for audio data stored on the device **10**. For example, the integrated speakers may be used to play music stored in the device **10**.

[0073] The device **10** may further include a near field communication (NFC) device **44**. The NFC device **44** may be located within the enclosure **12**, and a mark or symbol on the exterior of the enclosure **12** may identify its location within the enclosure **12**. The NFC device **44** may allow for close range communication at relatively low data rates (424 kb/s), and may comply with standards such as ISO 18092 or ISO 21481, or it may allow for close range communication at relatively high data rates (560 Mbps), and may comply with the TransferJet® protocol. In certain embodiments, the communication may occur within a range of approximately 2 to 4 cm. The close range communication with the NFC device **44** may take place via magnetic field induction, allowing the NFC device **44** to communicate with other NFC devices or to retrieve information from tags having radio frequency identification (RFID) circuitry. As discussed below, the NFC device **44** may provide a manner of acquiring merchandise information, acquiring payment information, and communicating with an external server.

[0074] Information also may be acquired through a biometric sensor **45**. The biometric sensor **45** may be located within the enclosure **12** and may be used to verify or identify a user. For example, the biometric sensor **45** may be used in conjunction with a smartcard to verify the identity of a consumer. In another example, the biometric sensor **45** may be used to identify a customer and obtain payment information for that customer by accessing a database of stored customer information. The database may be maintained by the merchant or by a third party service provider. The biometric sensor **45** may include a fingerprint reader or other feature recognition device and may operate in conjunction with a feature-processing program stored on the electronic device **10**.

[0075] FIG. **2** illustrates the back of the electronic device **10**. Two additional input devices may be accessed from the back of the device **10**, a camera **46** and a scanner **48**. Of course, the locations of the camera **46** and the scanner **48** are provided for illustrative purposes. In other embodiments, the camera **46** and scanner **48** may be accessed from the front or side of the device **10**.

[0076] The camera **46** may be used to capture images or video and may be used to obtain merchandise information or payment information. For example, the camera **46** may be used to capture an image of a credit card to obtain payment information. In another example, the camera **46** may be used to take a picture of an item for purchase to identify the item. The camera **46** may be a 2.0 megapixel camera or other suitable camera and may operate in conjunction with image processing software stored within the electronic device **10**.

[0077] The scanner **48** may be located within the enclosure **12** and may be used to obtain merchandise information and/or payment information. For example, the scanner **48** may be used to read a stock-keeping unit (SKU) number of an article for purchase. In another example, the scanner **48** may be used to read bank account information from a check. The scanner **48** may be a laser scanner, LED scanner, or other suitable scanning device and may operate in conjunction with a decoder stored within the electronic device **10**.

[0078] Additional details of the illustrative device **10** may be better understood through reference to FIG. **3**, which is a block diagram illustrating various components and features of the device **10** in accordance with one embodiment of the present invention. The block diagram includes the display **24**, the NFC device **44**, the camera **46**, and the scan device **48** discussed above, as well as many other components.

[0079] The operation of the device **10** may be controlled by a central processing unit (CPU) **50** and a control circuit **52** that provide the processing capability required to execute the operating system, programs, GUI **28**, and any other functions of the device **10**. The CPU **50** may include a single processor or it may include a plurality of processors. For example, the CPU **50** may include "general purpose" microprocessors, a combination of general and special purpose microprocessors, instruction set processors, graphics processors, video processors, and/or related chips sets, and/or special purpose microprocessors. The control circuit **52** may include one or more data buses for transferring data and instructions between components of the device **10**. The control circuit **52** also may include on board memory for caching purposes.

[0080] Information used by the CPU **50** may be located within long-term storage **54**. The long-term storage **54** of electronic device **10** may be used for storing data required for the operation of the CPU **50** as well as other data required by the device **10**. For example, the storage **54** may store the firmware for the electronic device **10** that is used by the CPU **50**. The firmware may include an operating system, as well as other programs that enable various functions of the electronic device **10**, GUI functions, and/or processor functions. The storage **54** also may store components for the GUI **28**, such as graphical elements, screens, and templates. Additionally, the long term storage **54** may store data files such as media (e.g., music and video files), image data, software, preference information (e.g., media playback preferences), wireless connection information (e.g., information that may enable the device **10** to establish a wireless connection, such as a telephone connection), subscription information (e.g., information that maintains a record of podcasts, television shows or other media to which a user subscribes), telephone information (e.g., telephone numbers), and any other suitable data.

[0081] In certain embodiments, the storage **54** may include an image-processing program for extracting textual or

encoded information from an image. For example, the image-processing program may be used to extract credit card information from a picture of the credit card. In another example, the image-processing program may be used to identify an article from the store database using the picture of the article. The long-term storage **54** may be non-volatile memory such as read only memory, flash memory, a hard drive, or any other suitable optical, magnetic, or solid-state computer readable media, as well as a combination thereof.

[0082] One or more communication interfaces **56** may provide additional connectivity channels for receiving and transmitting information. The communication interface **56** may represent, for example, one or more network interface cards (NIC) or a network controller as well as associated communication protocols. The communication interface **56** may include several types of interfaces, including but not limited to, a wireless local area network (WLAN) interface **58**, an NFC interface **60**, an unstructured supplementary service data (USSD) interface **62**, a personal area network (PAN) interface **64**, a local area network (LAN) interface **66**, a wide area network (WAN) interface, and a short message service (SMS) interface **70**.

[0083] The PAN interface **64** may provide capabilities to network with, for example, a Bluetooth® network, an IEEE 802.15.4 (e.g., ZigBee) network, or an ultra wideband network (UWB). As should be appreciated, the networks accessed by the PAN interface **64** may, but do not necessarily, represent low power, low bandwidth, or close range wireless connections. The PAN interface **64** may permit one electronic device **10** to connect to another local electronic device, such as a computer or portable media player, via an ad-hoc or peer-to-peer connection. However, the connection may be disrupted if the separation between the two electronic devices exceeds the range of the PAN interface **64**.

[0084] The LAN interface **66** and WLAN interface **58** may provide longer-range communication channels, generally exceeding the range available via the PAN interface **64**. The LAN interface **66** may represent an interface to a wired Ethernet-based network, and the WLAN interface **58** may represent an interface to a wireless LAN, such as an IEEE 802.11x wireless network. Additionally, in many cases, a connection between two electronic devices via the LAN interface **66** may involve communication through a network router or other intermediary device.

[0085] Connection to a wide area network (WAN) may be provided through the WAN interface **68**. In certain embodiments, the wide area network may include a private network maintained by a merchant for transferring information between retail stores. The WAN interface **68** may permit a connection to a cellular data network, such as the Enhanced Data rates for GSM Evolution (EDGE) network or the 3G network. When connected via the WAN interface **68**, the electronic device **10** may remain connected to the Internet and, in some embodiments, to another electronic device, despite changes in location that might otherwise disrupt connectivity via the PAN interface **64** or the LAN interface **66**.

[0086] In certain embodiments, the device **10** may use a device identification networking protocol to establish a connection with an external device through a network interface. For example, both the device **10** and the external device may broadcast identification information using internet protocol (IP). The devices may then use the identification information to establish a network connection, such as a PAN connection or a LAN connection, between the devices. By way of example, the device identification protocol may be Bonjour® by Apple Inc.

[0087] Small size communications may be sent using the USSD interface **62** and the SMS interface **70**. The SMS interface **70** may allow transmission of text messages of 140 bytes or less. In certain embodiments, larger size messages may be sent using concatenated SMS. The USSD interface **62** may facilitate the transmission of real-time text messages over GSM signaling channels. For example, the USSD interface **62** may be used to query inventory or price information for an article of merchandise.

[0088] Close range communication may occur through the NFC interface **60**. The near field communication (NFC) interface **60** may operate in conjunction with the NFC device **44** to allow for close range communication. The NFC interface **60** may exist as a separate component, may be integrated into another chipset, or may be integrated with the NFC device **44**, for example, as part of a system on a chip (SoC). The NFC interface **60** may include one or more protocols, such as the Near Field Communication Interface and Protocols (NFCIP-1) for communicating with another NFC enabled device. The protocols may be used to adapt the communication speed and to designate one of the connected devices as the initiator device that controls the near field communication. In certain embodiments, the NFC interface **60** may be used to receive information, such as the service set identifier (SSID), channel, and encryption key, used to connect through another communication interface **58**, **64**, **66**, or **68**.

[0089] The NFC interface **60** may control the near field communication mode of the NFC device **44**. For example, the NFC interface **60** may be configured to switch the NFC device **44** between a reader/writer mode for reading NFC tags, a peer-to-peer mode for exchanging data with another NFC enabled device, and a card emulation mode for allowing another NFC enabled device to read information. The NFC interface **60** also may be configured to switch the device **44** between an active mode where the device **44** generates its own RF field and a passive mode where the device **44** uses load modulation to transfer data to another device generating a RF field. Operation in passive mode may prolong the battery life of the device **10**. In certain embodiments, the modes of the NFC device **44** may be controlled based on user or manufacturer preferences **72**.

[0090] The preferences **72** may be stored within the storage **54** and may be set by the device manufacturer or by a user through the GUI **28** (FIG. **1**). The preferences **72** may determine properties of a communication interface **56**, **58**, **60**, **62**, **64**, **66**, **68**, and **70**. For example, the preferences **72** may include a list of networks to which the device **10** may connect. In another example, the preferences **72** may specify the mode of the NFC device **44**. For example, the NFC device **44** may operate in a passive mode unless the POP application is running.

[0091] The preferences **72** also may govern the selection priority between the communication interfaces **56**, **58**, **60**, **62**, **64**, **66**, **68**, and **70**. For example, the device **10** may be configured to communicate through the LAN interface **66** whenever a LAN connection is available. In certain embodiments, the preferences **72** may be based on properties of the data to be transferred. For example, a user may specify that purchases involving a large number of articles be communicated only through the WLAN interface **58** or the WAN interface **68**. The preferences **72** may be based on a number of factors,

including, but not limited to, the currency amount of a sales transaction, the size of the data to be transferred, the type of data, and the security features **74** available for that communication interface.

[0092] The security features **74** may include one or more cryptographic protocols, such as a secure sockets layer (SSL) protocol or a transport layer security (TLS) protocol, for establishing secure communications between the device **10** and another device. In certain embodiments, the security features **74** may be configured to authenticate a device in accordance with the teachings of the commonly assigned U.S. patent application Ser. No. _____ (Applicant docket number APPL:0065), entitled "Systems and Methods for Secure Wireless Transactions," to Michael Rosenblatt et al., filed on Sep. 30, 2008, incorporated herein by reference in its entirety for all purposes. The security features **74** may be particularly useful when transmitting payment information, such as credit card information or bank account information. The security features **74** also may include a secure storage area that may have restricted access. For example, a pin or other verification may need to be provided to access the secure storage area. In certain embodiments, some or all of the preferences **72** may be stored within the secure storage area. Further, security information, such as an authentication key, for communicating with a retail server may be stored within the secure storage area. In certain embodiments, the secure storage area may include a microcontroller embedded within the electronic device **10**.

[0093] Information received through the communication interface **56**, as well as information contained in the storage **54**, may be displayed on the display **24**. As noted above, a user may select information to display through the GUI **28** (FIG. **1**). A touch screen **74** may be positioned in front of or behind the display **24** and may be used to select graphical elements, such as the icons **30** (FIG. **1**), shown on the display **24**. The touch screen **54** is configured to receive input from a user's or object's touch and to send the information to the CPU **50**, which interprets the touch event and performs a corresponding action. The touch screen **76** may employ any suitable type of touch screen technology such as resistive, capacitive, infrared, surface acoustic wave, electromagnetic, or near field imaging. Furthermore, the touch screen **76** may employ single point or multipoint sensing.

[0094] An input/output (I/O) controller **78** may provide the infrastructure for exchanging data between the control circuit **52** and the input/output devices, such as the touch screen **76**, the scan device **48**, the camera **46**, and the display **24**. The I/O controller **78** may contain one or more integrated circuits and may be integrated within the control circuit **52** or exist as a separate component. The I/O controller **78** also may provide the infrastructure for communicating with external devices through the I/O ports **34**, **36**, and **38** shown in FIG. **1** and may be used for connecting the device **10** to an external computer, bar code scanner, a printer, audio headphones, or the like.

[0095] The I/O controller **78** also may provide the infrastructure for communicating with the CPU **50** through the input structures **14**, **16**, **18**, **20**, and **22** shown in FIG. **1**. The user input structures **14**, **16**, **18**, **20**, and **22** may be used in conjunction with, or independently of, the touch screen **76** to select inputs for the device **10**.

[0096] The portability of the device **10** makes it particularly well suited to performing sales transactions. To facilitate transport and ease of motion, the device **10** may include an integrated power source **80** for powering the device **10**. The power source **80** may include one or more batteries, such as a Li-ion battery, which may be user-removable or secured to the enclosure **12**. In certain embodiments, the proprietary connection I/O port **34** may be used to connect the device **10** to a power source for recharging the battery.

[0097] FIG. **4** illustrates a system **90** for conducting a sales transaction using the electronic device **10**. Due to the portability of the electronic device **10**, the sales transaction maybe conducted within a wide variety of environments. For example, the sales transaction may occur near a clothing rack within a retail store, on an airplane, for example, when a flight attendant sells a snack to a passenger or in a customer's home when a merchant such as a pizza delivery person delivers food. The electronic device **10** may receive identification information, such as a SKU number, UPC code, model number, serial number, or other identifier, for an article **92**. The article of merchandise **92** may be any article generally available for sale, such as an article of clothing, an electronic device, or an article of food. In certain embodiments, the article of merchandise **92** may represent a service item such as car wash or medical procedure.

[0098] The electronic device **10** may receive the identification information through the communication interface **56**. For example, the identification information may be received through a PAN communication channel, a near field communication channel, or a network communication channel. In one example, the electronic device **10** may read an NFC tag located on the article **92** to obtain the identification information. The identification information also may be input into the device **10** using the GUI **28** (FIG. **1**). For example, a sales person may read the identification information from an article and input it into the electronic device **10** using a keypad or touch screen of the electronic device **10**. In other embodiments, the scanner **48** (FIG. **1**) or the camera **46** (FIG. **1**) may be used to obtain the identification information.

[0099] In certain embodiments, the price information may be included within the identification information. For example, the price of article **92** may be encoded on a bar code or NFC tag located on the article **92**. However, in other embodiments, the electronic device **10** may use the received identification information to query the price information. For example, the electronic device **10** may transmit a SKU number to an external device, such as a server, to obtain the price information associated with that SKU number.

[0100] Using the received identification information, the device **10** may determine a payment amount or amount due. In certain embodiments, identification information for multiple articles **92** may be transmitted to the electronic device **10**. The electronic device may calculate an amount due, for example, by totaling the price for each article **92**. In other embodiments, the device **10** may transmit the identification information to an external server or other electronic device capable of calculating the amount due. In these embodiments, the external device may perform the calculation and then transmit the calculated amount due to the electronic device **10**.

[0101] The electronic device **10** also may receive payment information through the communication interface **56**. The payment information **94** may include information to process payment for the article **92**. For example, the payment information **94** may include credit card information or bank account information. The payment information **94** may be received by a variety of methods, such as through the communication interface **56** (FIG. **3**), through the camera **46**

(FIG. **2**), through the scanner **48** (FIG. **2**), through the biometric sensor **45** (FIG. **1**), or through the GUI **28** (FIG. **1**). For example, the device **10** may be brought in close proximity to a smart card or NFC enabled credit card to receive the payment information **94**. In another example, the device **10** may establish a PAN communication link, or other short-range communication link, with a customer's electronic device. The link may be established using a device identification networking protocol, such as Bonjour®. The device **10** may then receive the payment information **94** from the customer's electronic device. For example, the customer's electronic device may include an electronic wallet application that stores the customer's credit card information.

[0102] The electronic device **10** also may communicate with an external sever **96**. The server **96** may be maintained by the merchant or by a third party service provider and may include a database containing inventory information, price information, and other sales information related to articles available for purchase. In certain embodiments, the server **96** may be located within close proximity to the electronic device **10**. For example, the server **96** may be located within a department store where the electronic device **10** is used to complete sales transactions for articles located within the store. The server **96** also may be located in a remote location. For example, the server **96** may be located within a pizza restaurant where the electronic device **10** is used to complete sales transactions at a customer's home when pizza is delivered.

[0103] The electronic device **10** may communicate with the server **96** through the communication interface **56** or through an I/O port, such as proprietary connection port **36**. For example, the communication interface **56** may be used to communicate with the server **96** or a PAN, WAN, or WLAN. The I/O port **36** also may be used to connect to an Ethernet port to communicate with the server **96** over a LAN. The electronic device **10** may communicate directly with the server **96** or information may be passed to the server **96** through an intermediate device such as a dock or external computer. Further, in certain embodiments, the server **96** may authenticate the electronic device **10** using one or more machine identifiers of the electronic device **10** as described in the commonly assigned and previously incorporated patent application Ser. No. _____ (Applicant docket number APPL:0065). The authentication process may provide an additional level of security by allowing the server **96** to verify that the electronic device **10** has been authorized for communication with the server **96**.

[0104] The electronic device **10** may communicate with the server **96** to obtain article information, such as price information and inventory information that is stored within the server database. The electronic device **10** also may transmit the payment information **94** to the server **96** in order to obtain authorization for payment. To authorize payment, the server **96** may transmit the payment information **94** to financial institutions **98** and **100**. Specifically, the server **96** may transmit an authorization request containing the account information to the merchant's financial institution **98**. The merchant's financial institution **98** may be a bank where the merchant maintains its accounts.

[0105] The merchant's financial institution **98** may then pass the authorization request along to financial institution **100** associated with the payment information **94**. The financial institution **100** may be a bank that maintains the customer's checking account or credit card. In other embodiments, the financial institution **100** may include a credit card company such as American Express or MasterCard. The financial institution **100** may use the payment information **94** received along with the authorization request to authorize the payment. For example, the financial institution **100** may verify that the customer has sufficient funds or credit to pay for the amount due.

[0106] Once the financial institution **100** has authorized payment, the financial institution **100** may transmit an authorization code to the merchant's financial institution **98**. The merchant's financial institution **98** may then transmit the authorization code to the server **96**, which in turn may transmit the authorization code to the electronic device **10**. In other embodiments, the sever **96** may process the authorization code and transmit an authorization message, instead of the authorization code, to the electronic device **10**. The communications between the server **96** and the financial institutions **98** and **100** may occur over a variety of communication channels, such as a LAN or a WAN.

[0107] Upon receiving the authorization code or message, the electronic device **10** may display a notification message on the display **24** (FIG. **1**) alerting the merchant that the payment has been processed. The merchant may then complete the sales transaction by transferring the article **92** to the customer. In other embodiments, the merchant may receive delivery information from the customer and then subsequently deliver the article **92** to the customer's specified location.

[0108] Referring now to FIG. **5**, a flowchart is depicted of an exemplary method **102** for conducting a sales transaction using the electronic device **10**. The method **102** may be employed to conduct various types of sales transactions, including but not limited to, ringing up items for sale in a department store, selling food to a passenger on an airplane, billing an insurance company for medical devices used during a surgery, selling food at a restaurant, or selling fundraising items to neighborhood residents.

[0109] The method **102** may begin by acquiring (block **104**) article information. The article information may be acquired by a variety of methods that will be discussed below with respect to FIGS. **5-8**. For example, the article information may be acquired by using the NFC device **44** (FIG. **1**) to read information from an NFC tag located on the article. In another example, the scanner **48** (FIG. **2**) may be used to read a bar code located on the article. In certain embodiments, the camera **46** (FIG. **2**) may be used to take a picture of the article. The article information also may be input through the GUI **28** (FIG. **1**) of the electronic device **10**.

[0110] The article information is then used to calculate (block **106**) a payment amount. The calculation may be performed by the electronic device **10** or by an external device such as the server **96**. To calculate the payment amount, the device **10** may use the article information to retrieve the purchase price. For example, the purchase price may be encoded on an NFC tag or barcode located on the article. In another example, the device may transmit the article information to the server to obtain the purchase price for that article from the server's database.

[0111] The payment amount may be calculated using the purchase price. If only one article is being purchased, the purchase price may correspond to the payment amount. However, if multiple articles are being purchased, the device **10** may total the purchase price for each article to calculate the payment amount. For example, executable code stored within the storage **54** (FIG. **3**) may be used to calculate the payment

amount. In another example, the server **96** may calculate the payment amount and transmit the amount to the electronic device **10**. In certain embodiments, the payment amount may be displayed on the electronic device **10** after each article is input into the electronic device **10**.

[0112] The electronic device **10** may then acquire (block **108**) the payment information. The payment information may include the customer's account number, account type, name, and bank or financial institution, among other things. The payment information may be included within another electronic device, within a magnetic strip of a credit card, within a smart card, on a check, or within a customer's biometric feature. In certain embodiments, the payment information may be stored on the electronic device **10** and retrieved in response to receiving customer information. For example, the payment information may be stored within the storage **54** and retrieved by the device **10** in response to receiving a customer's user name and password. Of course, cash also may be used to pay for the article. The payment information may be acquired through a variety of methods described below with respect to FIGS. **9-19**. For example, the payment information may be acquired by bringing the electronic device **10** in close proximity to an NFC enabled device containing the payment information. In another example, the payment information may be acquired through the camera **46** (FIG. **2**), the biometric sensor **45** (FIG. **1**), or the GUI **28** (FIG. **1**) of the electronic device **10**. Further, a cash payment may be input using the GUI **28** (FIG. **1**).

[0113] The electronic device **10** may then transmit (block **110**) the payment information and request authorization for payment. The information may be transmitted by connecting the electronic device **10** to the server **96** using a wired or wireless connection. In certain embodiments, an intermediate device, such as a docking station or intermediate sales terminal, may be use to transmit the information. As discussed above with respect to FIG. **4**, the server **96** may obtain authorization from the financial institutions **98** and **100** and transmit the authorization back to the electronic device **10**.

[0114] Upon receiving (block **12**) authorization, the electronic device may display an authorization message indicating that the payment as been approved. In other embodiments, the electronic device may emit a sound notifying the merchant that the payment has been approved. The authorization message or notification may notify the merchant that the transaction is complete. The merchant may then transfer the article to the customer.

[0115] FIGS. **6-45** further illustrate methods of conducting a sales transaction using the electronic device **10**. Many of these figures illustrate various screens that a user of the electronic device **10** may encounter while conducting a sales transaction. The screens may be part of the GUI **28** (FIG. **1**) and may be navigated using the touch screen **76** (FIG. **3**) or the user input structures **14**, **16**, **18**, **20**, and **22** (FIG. **1**) of the electronic device **10**. As may be appreciated, the functionality described may be achieved with a wide variety of graphical elements and visual schemes. Therefore, the screens shown in the following figures are not intended to be limiting. Other embodiments may include a wide variety of user interface styles and the precise user interface conventions shown herein are provided by way of example only.

[0116] FIG. **6** illustrates a series of screens for acquiring identification information from an article. Screen **114** may serve as the main menu for conducting sales transactions and may be accessed through selection of the POP icon **32** shown in FIG. **1**. Screen **114** includes a title bar **116** indicating the current state of device **10**. As shown on screen **114**, the device **10** is currently running the POP application. Screen **114** includes several graphical elements **118**, **120**, **122**, **124**, and **126** that allow navigation within the POP application. Specifically, graphical element **118** includes a done button that when selected may return the user to the home screen shown in FIG. **1**. The user may select button **118** to exit the POP application.

[0117] The graphical elements **120**, **122**, **124**, and **126**, shown here as selection bars, allow navigation through the POP application. Indications **128** notify the user that additional screens may appear upon selection of the graphical elements **120**, **122**, **124**, and **126**. Specifically, selection of the graphical element **120** may display a screen for conducting a sales transaction. The graphical element **122** includes several selection bars for displaying screens for obtaining merchandise information that may be related to a sales transaction. The selection bars **122** may be selected to process a return, to exchange one article of merchandise for another, or to perform a price check.

[0118] The graphical element **124** includes several selection bars for obtaining customer information to enroll a customer in a merchant's program. The selection bars **124** may be selected to enter customer information for sending coupons, to enter customer information for enrolling a customer in a rewards program, or to enter customer information to apply for a store credit card.

[0119] The graphical element **126** includes selection bars for communicating with various store personnel. The selection bars **126** may be selected to contact a manager or security using a phone or e-mail application of the electronic device **10**. As noted above, the graphical elements shown on the screen **114** are provided by way of example only and are not intended to be limiting. For example, many other graphical elements may be provided for performing various sales related transactions, such as checking inventory amounts or determining when a shipment of merchandise may arrive.

[0120] In response to selection of the sale selection bar **120**, as generally indicated by an arrow, the device **10** may display a screen **132** for scanning an article of merchandise. The screen **132** includes a larger title bar **134** indicating that the device is currently operating in the sale mode. The title bar **134** also includes instructions **136** instructing the merchant to scan items to ring up. In certain embodiments, the device **10** may be automatically configured to scan items using the NFC device **44** (FIG. **1**). For example, selection of the sale graphical element **120** may automatically place the NFC device **44** (FIG. **1**) in the active mode. Items may then be scanned by bringing the device **10** within close proximity to an NFC tag located on the article. In other embodiments, the device **10** may be automatically configured to scan items using the scanner **48** (FIG. **2**).

[0121] In yet other embodiments, the device may be configured to receive article identification information through a variety of inputs, such as the camera **46** FIG. **2**), the scan device **48** (FIG. **2**), the NFC device **44** (FIG. **1**), or the GUI **28** (FIG. **1**). In these embodiments, the graphical elements may be selected to specify the input method. However, in other embodiments, no selection may be required. The device may be configured to enter the appropriate input mode upon detection of an input through one of the input devices.

[0122] Regardless of the input method used, the scanned items may appear within a display window **138**. Window **138**

includes several selectable display areas **140** that display information about the scanned articles. The selectable display areas **140** may show the name of the article, its price, and other descriptive information. The display areas **140** may be selected to show additional information about the article, such as the article serial number, product description, and delivery charges and requirements. The graphical elements **142**, **144**, **146**, and **148** included within display areas **140** may allow items within the areas **140** to be edited. Specifically, the graphical elements **142** depict subtraction symbols and allow items to be deleted. A user may select the graphical element **142** to display a delete button **144**. Once an element **142** has been selected, it may rotate to notify a user that it has been selected. For example, the graphical element **142** has been rotated from a horizontal position to a vertical position to indicate that it has been selected. In response to selection of the delete button **144**, the device may remove the corresponding item from the list of scanned items. For example, as shown on screen **132**, selection of the delete button **144** may remove the Time Capsule™ article from the list of scanned items.

[0123] Graphical elements **146** depict addition symbols and allow items to be added to the list of scanned items. A user may select the graphical element **146** to display an add button **148**. In response to selection of the add button **148**, the device **10** may be configured to increase the number of corresponding items by one increment. For example, lower display area **140** shows that a dock for an electronic device has been scanned. The graphical element **146** has been rotated to indicate that is has been selected to display the add button **148**. The number two appears in parentheses next to the description to indicate that the add button **148** has been selected to increase the number of docks purchased from one to two. As will be appreciated, the delete and add buttons **144** and **148** are just one manner of editing the scanned items. In other embodiments, the display areas **140** may be selected to bring up additional screens for editing the scanned items.

[0124] In addition to providing article information, the selectable areas **140** may notify the merchant of the items that have been input. If an article is not scanned or input correctly, it may not appear within the display areas **140**. A scroll bar **150** may be used to scroll through the display areas **140** within window **138** and may be used to view the display areas **140** not currently shown on the screen **132**. A summary bar **152** is located below window **138**. The summary bar **152** displays a total of all of the scanned items that corresponds to the payment amount. If all items have been properly scanned, the merchant may select a graphical element **156**, shown as a done button, to end the scanning process.

[0125] In certain situations, an article may not properly ring up through scanning. For example, the NFC tag or the bar code may be damaged and unreadable. In these situations, the graphical element **154** may be used to display a keypad for manually entering the article identification information. Selection of the graphical element **154** may display a screen **160** that includes a keypad **162** and display windows **164** and **166**. Keys or buttons **168** representing numbers and letters may be used to enter identification information for an article. In certain embodiments, information displayed on the bar code or NFC tag may be entered through the keypad **162**. In other embodiments, the keypad **162** may be used to enter the name or model number of an article.

[0126] The identification information entered using keypad **162** may be displayed within a display area **170** of the display window **164**. A graphical element **172** may be used to enter the identification information show within the display area **170**. Upon entry of the article information, the device **10** may display the name and price information for the corresponding article within the display window **166**. The graphical elements **142** and **146** may be used to increase or decrease the quantity of the items shown within display window **166** in a manner similar to that described with respect to screen **132**. The title bar **134** includes instructions **174** prompting a user to input the SKU number of an article. In other embodiments, the instructions may prompt a user to enter a UPC code, a model number, name of an article, or other identifying information. After all items requiring manual input have been entered, a user may select the graphical element **176** to end the manual input process and return to the sale screen **132**.

[0127] FIG. **7** illustrates a near field communication based scanning process. A merchant **178**, shown here as a retail store employee, holds the electronic device **10** and approaches a customer **180** to begin the sales transaction. Note that the portability of the electronic device **10** allows the sales transaction to occur anywhere within the retail store. A fixed transaction terminal, such as a cash register, is not required to complete the sales transaction. However, in certain embodiments, the device **10** may be used in conjunction with a fixed transaction terminal.

[0128] The customer **180** holds an article **182** that she would like to purchase. The article **182** may be any article of merchandise, such as a computer keyboard or monitor. A NFC tag **184** may be located on the article **182**. The NFC tag **184** may be integrated into the packaging of the article **182** or may be affixed to an outer surface of the article **182**. To scan the article **182**, the merchant **178** may bring the electronic device **10** within close proximity to the NFC tag **184**. The electronic device **10** may then read the NFC tag **184** and display a description of the article **182** on a screen of the device. For example, an article description may appear on the screen **132** shown in FIG. **6**. Of course, the scanning process may occur within a variety of environments and conditions. For example, in other embodiments, the merchant **178** may scan items located in a cart or shopping bag. In other embodiments, the customer **180** may identify sample articles located on a display floor, and the merchant **178** may scan the articles for delivery or pickup by the customer **180**. Further, for larger items or service items, the merchant **178** may scan an NFC tag located on a card that contains a description of the article.

[0129] FIG. **8** is a flowchart depicting an exemplary method **186** for scanning an article using near field communication. The method may begin by reading (block **188**) an NFC tag. As noted above, the electronic device may read the NFC tag when it is brought within close proximity of the NFC tag. The device may then retrieve (block **190**) article information. In certain embodiments, the article information may be retrieved by reading the NFC tag. However, in other embodiments, the information read from the NFC tag may be used to retrieve the article information from the storage **54** (FIG. **3**) of the electronic device or from an external database stored on the server **96** (FIG. **4**). The article information may include among other things, the name of the article and the purchase price. The device **10** may then display (block **192**) the article information. For example, the device **10** may display the article information within the window **138** shown in FIG. **6**.

[0130] After, or simultaneously with displaying the article information, the device may update (block **194**) the total purchase price for the order. For example, the device **10** may add the purchase price of the scanned item to the previously

calculated total. In certain embodiments, the total purchase price may be displayed in the summary bar **152** shown in FIG. **6**. After updating the total, the device **10** may begin the method **186** again by reading (block **188**) another NFC tag. The device **10** may be configured to repeat the method **186** until all articles for purchase have been scanned. In certain embodiments, the method **186** may end in response to selection of the done button **156** shown in FIG. **6**.

[0131] After all the articles have been scanned, the device **10** may receive payment information. As shown in FIG. **9**, the merchant may end the scanning process by selecting the done graphical element **156**. In response to selection of the done button **156**, the device **10** may display a payment screen **198**. The title bar **134** notifies the merchant that the device is currently in a payment mode. The screen **198** includes several selection bars **200** for selecting the type of payment. For example, payment may be received by a credit card, gift card, check, or cash.

[0132] The title bar **134** includes instructions **202** prompting the merchant to select the payment type. The title bar **134** also includes a graphical element **204** that may be selected to return to the scanning screen **132**. For example, if a customer has additional articles to scan, the merchant may select the graphical element **204** to return the device **10** to the scanning mode. If the merchant is ready to receive payment, the merchant may select one of the selection bars **200** to specify the payment type. For example, the merchant may ask the customer how she would like to pay and then select the corresponding selection bar **200** to receive payment by credit card, debit card, gift card, check, biometric feature, or cash. Specific methods for receiving payment through various payment types are discussed below with reference to FIGS. **10-19**.

[0133] The payment screen **198** also includes graphical elements **206** and **208** for saving or canceling the order. For example, if a customer decides she would like to shop for additional articles, the merchant may select the graphical element **206** to save the order for future reference. In response to selection of the graphical element **206**, the device **10** may store the order within the storage **54** (FIG. **1**) of the device **10** for later retrieval. A customer also may decide that she no longer wishes to make a purchase. In these situations, the merchant select the graphical element **208** to cancel the order. In response to selection of the graphical element **208**, the device **10** may delete the scanned items from the storage **54** (FIG. **3**). Of course, the merchant also may edit the order by selecting the graphical element **204** to return to the scanning mode.

[0134] FIG. **10** illustrates a series of screens for acquiring payment information from a credit card. As discussed above, the payment screen **198** allows a merchant to specify the type of payment. In response to selection of the credit card selection bar **200**, the device **10** may display a credit card payment screen **209**. The screen **209** includes several selection bars **210** for choosing the specific type of credit card. The selection bars **210** may be configured to represent any type of credit card. For example, the merchant may select between a store issued credit card, Visa, MasterCard, or American Express. In certain embodiments, the selection bars **210** may be customized to correspond to the types of credit cards that a merchant is able to receive. For example, the screen **209** does not include a selection for a Discover Card, indicating that the merchant is not setup to receive payments using a Discover Card.

[0135] Instructions **212**, shown on title bar **134**, prompt the merchant to select the type of card. If the customer is not ready to pay, the merchant may select a graphical element **214** to return to the payment screen **198**. For example, if a customer does not have one of the credit cards listed on screen **209**, the merchant may select the payment graphical element **214** to return to the payment screen **198** to select another form of payment. Further, while at screen **209**, a customer may wish to edit her order. In this case, the merchant may select a graphical element **216** to add or delete items from the customer's order. For example, during the payment process, the merchant may point out an article that is currently on sale. If the customer wishes to add the article to the order, the merchant may select the edit order button **216** to add the additional item to the order. In certain embodiments, selection of the graphical element **216** may display the scanning screen **132** shown in FIG. **9**. The credit card screen **209** also includes the graphical element **208** that may be selected to cancel the order.

[0136] After the merchant specifies the card type by selecting one of the selection bars **210**, the device **10** may display a payment screen for entering information for the selected type of credit card. The payment screen may be customized to request the information required to process that type of credit card. As shown in FIG. **10**, the merchant has selected the store card selection bar **210** to display a screen **218** for entering the store card information. The screen **218** includes a display window **220** with several selectable areas **222**. The selectable areas **222** allow entry of the credit card number, the expiration date, and the Card Verification Value (CVV). Of course, the types of selectable areas included may depend on the information required to process the selected type of credit card. Further, additional selectable areas may be included for entering information such as the customer's name or address.

[0137] The title bar **134** includes instructions **224** prompting the merchant to enter the card information. The title bar **134** also includes graphical elements **226** and **228** for navigating between screens. The graphical element **226** may be selected to return to the previous card selection screen **209**. The graphical element **228** may be selected to pay using the information entered for the credit card.

[0138] A keypad **230** that includes keys or buttons **232** may be used to enter the credit card information. For example, a merchant may touch one of the selectable areas **222** to position a cursor within that area. The merchant may then select the buttons **232** to enter the card information for that selectable area **222**. In response to selection of a button **232**, the corresponding number may be displayed within the selectable area **222**. After all of the selectable areas **222** have been completed, the merchant may selected the pay graphical element **228** to process the payment.

[0139] In addition to the keypad **230**, other methods may be used to enter the card information. These methods may be selected through the graphical elements **234** and **236** included in the lower summary bar **152**. Specifically, the graphical element **234** may be selected to enter the card information using near field communication. The techniques for entering information using near field communication are described further below with reference to FIG. **11**. The graphical element **236** may be selected to enter the credit card information using the camera **46** (FIG. **1**). Entry of information using the camera is explained further below with respect to FIGS. **13** and **14**.

[0140] After the card information has been entered, the merchant may select the graphical element **228** to process a payment based on the entered card information. A payment status screen **240** may be displayed in response to selection of the graphical element **228**. The screen **240** includes a display window **242** indicating the status of the payment transaction. For example, an approval message is shown in the display window **242** indicating that the payment has been approved. If the payment has been rejected, a rejection message may appear within the display window **242**. The status of the transaction may be displayed after the device **10** has received authorization from the server **96** (FIG. **4**). For example, the device **10** may transmit the entered payment information to the server **96**, which may in turn transmit the information to financial institutions **98** and **100** to obtain an authorization code as described with respect to FIG. **4**.

[0141] The screen **240** also includes graphical elements **244** and **118** for navigating between screens. Specifically, the graphical element **244** may be selected to return to the point of purchase screen **114** (FIG. **6**) and conduct another sales transaction. The graphical element **118** may be selected to return to the home screen shown in FIG. **1**. For example, the merchant may select the graphical element **118** if all pending sales transactions have been completed.

[0142] The payment status screen **240** also includes two graphical elements **246** and **248** for scheduling transfer of the purchased articles to the customer. Specifically, the graphical element **246** may be used to schedule delivery of the articles to the customer's home or business. Selection of the graphical element **246** may display a screen for entering delivery information, such as the customer's address and the desired delivery time. The graphical element **248** may be selected to specify that the article will be picked up within the store. For example, this option may be used when an ordered article is not in stock or needs to be retrieved from a warehouse. Selection of the graphical element **248** may display a screen for entering the customer's preferred pickup time and the customer's contact information so that the merchant may alert the customer when the articles are available for pick up.

[0143] The screen **240** also includes a graphical element **250** that may be selected to send a receipt to the customer. Selection of the graphical element **250** may display a screen for entering a customer's e-mail or home address. The receipt may then be sent to the entered address. In other embodiments, the merchant may already have the customer's address through a rewards program or other type of customer account. In these embodiments, selection of the graphical element **250** may cause the device **10** to transmit the receipt to the customer's address. After the receipt has been sent, the merchant may select either the POP element **244** to conduct another sales transaction or the done element **118** to exit the point of purchase application.

[0144] FIG. **11** illustrates a series of screens for acquiring credit card information using near field communication. From the information entry screen **218**, a merchant may select the graphical element **234** to acquire the payment information using near field communication. The payment information may be acquired from an NFC enabled credit card, a smart card, or an NFC enabled device that stores the credit card information. The device **10** may display an NFC screen **252** in response to selection of the graphical element **234**. In certain embodiments, the device **10** may be configured to default to receiving card information via near field communication. In these embodiments, the device **10** may display the NFC screen **252** in response to selection of a credit card type.

[0145] The NFC screen **252** includes a display window **254** that shows the payment information that needs to be received. Instructions **256**, located within the title bar **134**, prompt the merchant to tap an NFC enabled credit card or device to the device **10**. For example, the merchant may tap a NFC enabled credit card by bringing the device **10** within close proximity to the NFC enabled credit card. In another example, the merchant may physically touch the device **10** to a NFC enabled credit card or device. In certain embodiments, the NFC enabled credit card may be a credit card that contains an NFC tag and the NFC enabled device may be a portable media player or personal data assistant that includes an electronic wallet software application. Once the information is received from the NFC enabled card or device, the information may be displayed within corresponding areas **258** of the display window **254**. For example, the device **10** may display the credit card number within the "Card #" display area **258** and may display the card's expiration month and year within the "Exp" display areas **258**.

[0146] The screen **252** also includes graphical elements **260** and **228** that allow navigation between screens. Specifically, the graphical element **260** allows the merchant to return to the card entry screen **218**. For example, the NFC enabled card may be damaged making it not readable by the device **10**. In this circumstance, the merchant may select the graphical element **260** to return to screen **218** and enter the card information using the keypad **230**. If the NFC information is received correctly, the merchant may select the graphical element **228** to pay using the displayed card information. In certain embodiments, the areas **258** may be selectable to allow editing of the card information. For example, the keypad **230** may be displayed in response to selection of an area **258**.

[0147] Selection of the graphical element **228** may display a CVV entry screen **262**. The screen **262** may provide additional security for the payment transaction by requiring the merchant to enter the CVV shown on the physical card or device. In other embodiments, the CVV may be replaced by a pin number or other verification code set by the customer or credit card provider. Further, in certain embodiments, such as sales transactions involving payments of twenty-five dollars or less, no CVV information may be required. In these embodiments, the CVV entry screen **262** may be omitted.

[0148] Instructions **264**, located within the title bar **134**, prompt the merchant to enter the CVV. A keypad **266** allows the CVV to be entered and displayed within a window **268**. The keypad **266** includes keys or buttons **270** that may be selected to display the corresponding CVV number within the window **268**. The keypad **266** also includes a delete key **272** for removing an existing entry, and a pay key **274**. After the CVV code is entered correctly and displayed within the window **268**, the merchant may select the pay key **274** to process the payment.

[0149] Upon selection of the pay key **274**, the payment status screen **240** may be displayed. Similar to the transaction described above with respect to FIG. **10**, the payment status screen **240** includes the window **242** displaying a message indicating that the transaction has been approved. The merchant may then set up delivery by selecting the graphical element **246**, set up store pick up by selecting the graphical element **248**, or send a receipt by selecting graphical element

250. Upon competition of the transaction, the merchant may select the POP graphical element **244** to conduct another sales transaction.

[0150] FIG. **12** is a flowchart depicting an exemplary method **280** for acquiring payment information using near field communication as illustrated in FIG. **11**. The method may begin by reading (block **282**) an NFC enabled card or device to receive payment information. As noted above, the electronic device **10** (FIG. **1**) includes an NFC device **44** (FIG. **1**) that may read the NFC enabled card or device when the NFC enabled card or device is brought within close proximity to the electronic device **10** (FIG. **1**). After reading the NFC enabled card or device, the electronic device may display (block **284**) some or all of the payment information received from the NFC enabled card or device. For example, the displayed payment information may include the card number and the expiration date. In certain embodiments, the electronic device also may display the customer's name. The received payment information may include information that is not displayed on the electronic device. For example, the payment information may include the name and contact information for the financial institution that issued the credit card, as well as any additional information required to authorize a payment from the credit card.

[0151] After displaying the received payment information, the electronic device may display (block **286**) a CVV prompt. For example, the CVV prompt may be displayed in the form of the instructions **264** shown on the screen **262** illustrated in FIG. **11**. In certain embodiments, the CVV prompt may be replaced by a prompt instructing the merchant to enter a pin code or other verification information. Further, in certain embodiments a CVV input may not be required to process the payment, and, therefore, block **286** may be omitted. For example, the CVV may not be required for small dollar transactions, or the CVV already may have been received by near field communication. In response to the CVV prompt, a merchant may enter the CVV using a keypad of the electronic device. The entered CVV may be displayed on the electronic device and in certain embodiments, may be represented by asterisks or other symbols to obscure the CVV data.

[0152] After receiving (block **288**) the CVV, the electronic device may receive (block **290**) a pay command signifying that the payment should be processed. For example, a merchant may select the graphical element **274** shown on the CVV screen **262** in FIG. **11** to issue the pay command. The electronic device may then transmit the payment information to an external server to obtain payment authorization as described above with respect to FIG. **4**.

[0153] The payment information also may be acquired from a credit card using a camera instead of near field communication. FIG. **13** illustrates a series of screens for acquiring payment information using the camera **46** shown in FIG. **2**. From the card entry screen **218**, the merchant may select the camera graphical element **236** to acquire the payment information using the camera. A camera input screen **300** facilitates entry of the payment information using the camera. The screen **300** includes a frame **302** consisting of two corners disposed on the screen **300** to identify the borders of the received image. The frame **302** may function as a viewfinder for the camera. In certain embodiments, the frame **302** may be omitted, and the entire display area may be used to receive the image.

[0154] Instructions **304** prompt the merchant to take a picture of the credit card. The merchant may position the electronic device **10** so that the card image is aligned within the frame **302**, and then the merchant may select graphical element **306** to capture the image. If the merchant would like to recapture the image, the merchant may select the graphical element **260** to return to the previous screen **218**. If the merchant has successfully captured the image, the merchant may select the graphical element **228** to begin the payment process using the captured image. Selection of the graphical element **228** may cause a CVV entry screen **308** to be displayed. Similar to the process described with respect to FIG. **11**, the merchant may enter the CVV using the keyapad **266**. After entry, the merchant may select the pay button **274** to process the payment. The payment status screen **240** may then be displayed and an approval message may be displayed within the window **242** to notify the merchant when the transaction has been approved.

[0155] FIG. **14** is a flowchart depicting an exemplary method **310** for acquiring payment information using a camera as illustrated in FIG. **13**. The method may begin by receiving (block **312**) a card image. The image may be received by taking a picture of the card using the camera **46** (FIG. **2**) of the electronic device. The electronic device may translate (block **314**) the captured image into the payment information. The translation may be performed using optical character recognition (OCR) or other vision based recognition techniques. In certain embodiments, software for performing OCR may be stored within the storage **54** (FIG. **3**) of the electronic device.

[0156] The electronic device may then assign (block **316**) the payment information to the corresponding categories. For example, the device **10** may assign the fifteen-digit credit card number to the card number category. The device **10** also may assign the four-digit expiration date to the expiration date category. In certain embodiments, software within the electronic device may be used to assign the payment information to the corresponding categories. For example, the software may identify zones or regions within the captured image and assign the information within those regions to corresponding fields. In one example, an American Express card may typically display the card number within the center of the card, and, therefore, the software may be configured to assign the information within this center zone to the card number category. In certain embodiments, the device may be configured for allow zonal OCR, allowing the merchant to draw zones on the display using the touch screen around the areas containing the card number and expiration date.

[0157] After the payment information has been assigned to the categories, the device may display (block **318**) the CVV prompt. For example, the CVV prompt may be displayed in the form of the instructions **264** shown on the screen **308** illustrated in FIG. **13**. In certain embodiments, the CVV prompt may be omitted or replaced by a prompt instructing the user to enter a pin code. After the device receives (block **320**) the CVV, the device may display the CVV information on the screen **308**. After receiving the CVV information, the device may receive a pay command (block **322**) to complete the transaction. For example, a merchant may select the pay button **274** shown in FIG. **13** to issue the pay command. In response, the device may transmit the payment information to an external server to obtain payment authorization.

[0158] The methods and screen configurations described above with respect to FIGS. **10-14** also may be employed to receive payment using a debit card or gift card. For example, the payment information for a debit card or gift card may be acquired using the keypad **162** (FIG. **6**), the NFC device **44**

(FIG. **1**), or the camera **46** (FIG. **2**) using the methods shown in FIGS. **10-14**. In certain embodiments, the CVV prompt may be replaced by a prompt for a pin number or other type of security code. For example, a debit card may require a pin code and a gift card may require a password. Further, the CVV prompt may be omitted for cards that do not require a security code.

[0159] FIG. **15** illustrates a series of screens for acquiring payment information from a check. From the payment entry screen **198**, a merchant may select the check selection bar **200** to display a check payment screen **324**. The screen **324** includes a display window **326** that includes several areas **328** for displaying the check information. The areas **328** display the check number, the account number, the routing number, and the number of the driver's license issued to the customer. Instructions **330** prompt the merchant to enter the check information. In certain embodiments, the information may be entered using the keypad **230**. For example, a merchant may touch one of the display areas **328** to position the cursor within that area and use the buttons **232** to enter the information. Of course, the items represented by the areas **328** may be customized to include additional or alternative types of information based on a merchant's preferences. For example, a merchant may omit the driver's license area **328** if the merchant does not require a driver's license number to process a check.

[0160] The check information also may be acquired through the camera. For example, the graphical element **236** may be selected to enter the check information using techniques similar to those described with respect to FIGS. **13** and **14**. In certain embodiments, the check information may be acquired using the scanner **48** (FIG. **2**). For example, the graphical element **336** may be selected to scan a bar code on the check using the scan device **48** (FIG. **2**). In other embodiments, the payment information may be acquired by scanning an NFC enabled check. In these embodiments, a graphical element may be included within the summary bar **152** to enter the check information using near field communication. The check information may be acquired by near field communication using techniques similar to those described above with respect to FIGS. **11-12**.

[0161] The screen also includes graphical elements **334** and **228** for navigating between screens. Specifically, the graphical element **334** allows the merchant to return to the payment screen **198** to receive a different form of payment. Once the check information has been entered, using the keypad **266** (FIG. **11**), the camera **46** (FIG. **2**), the scanner **48** (FIG. **2**), or the NFC device **44** (FIG. **1**), the merchant may select the graphical element **228** to process the payment and advance to the payment screen **240**. As noted above, the payment screen **240** includes the display window **242** indicating the status of the transaction.

[0162] In certain embodiments, the approval step may include transmitting the check information to a verification service for approval. For example, the merchant may hire a third party check verification service to verify checks received from customers. In these embodiments, selection of the graphical element **228** may cause the device to send the check information to the external server **96** (FIG. **4**), which may in turn send the check information to the check verification service. The check verification service may approve the check for payment and transmit the approval to the electronic device **10** through the external server. Upon receipt, the payment authorization may be displayed within the window **242**. The check information also may be transmitted to the customer's bank to verify that the customer has sufficient funds to process the transaction. Further, in other embodiments, the approval process may simply include verifying that all the check information has been entered, and no additional verification may be performed. After the transaction has been approved, the merchant may select the POP graphical element **224** to conduct another transaction.

[0163] In addition to paying by check or credit card, a customer may pay using account information linked to a biometric feature. For example, a customer may be part of a database that associates credit card or bank account information with a customer's fingerprint. To pay for an article, a customer may scan her fingerprint to pay using an account associated with her fingerprint.

[0164] FIG. **16** illustrates a series of screens for acquiring payment information using biometric features. From the payment type selection screen **198**, a merchant may select the biometric selection bar **200** to display a biometric entry screen **338**. The screen **338** includes instructions **340** that prompt a customer to place her finger on the biometric sensor **45**, shown here as a fingerprint scanner. Of course, in other embodiments, other types of sensors may be used in conjunction with other types of biometric recognition systems, such as face recognition, hand geometry, or voice recognition.

[0165] To enter payment information, a customer may place her finger on the biometric sensor **45**. The device **10** may read the fingerprint and acquire payment information based on the fingerprint. For example, the device **10** may compare the fingerprint to a biometric database of fingerprints linked to payment information. The biometric database may be maintained by the merchant or by a third-party service provider and may be stored on the electronic device **10** or on an external device accessed through the external server **96**.

[0166] The device **10** may query the biometric database to identify the customer. Upon identification of the customer, the customer's name and address, as well as other identifying information, may be displayed within the display areas **342**. If the information in the display areas **342** is not correct, the merchant may select the rescan graphical element **344** to re-execute the biometric scanning process. However, if the information is correct, the merchant may select the pay graphical element **228** to process a payment based on the biometric feature. For example, a customer may link her bank account or credit card information with the biometric feature stored in the biometric database. In response to selection of graphical element **228**, the device may query the biometric database for the payment information associated with the customer. The device may then transmit the payment information as described in FIG. **4** to obtain authorization for payment. Once the authorization has been received, an approval message may be displayed on the transaction status screen **240** within the display window **242**. After completion of the transaction, the merchant may select the POP element **224** to conduct another transaction.

[0167] FIG. **17** is a flowchart depicting an exemplary method **350** for acquiring payment information based on a biometric feature as illustrated in FIG. **16**. The method may begin by receiving (block **352**) biometric data. The biometric data may be received through a sensor, such as biometric sensor **45** located on the device **10**, and may include biometric features such as a fingerprint, hand geometry, or voice pattern. After receiving the data, the device **10** may encrypt (block **354**) the data, using an SSL protocol, for example, to

provide data security during transmission. In certain embodiments, the device **10** may perform feature extraction prior to encryption of the data. For example, a feature extraction program within the storage of the device may extract the sensed biometric features. In these embodiments, the extracted features may be encrypted. However, in other embodiments, the device **10** may encrypt the raw data and transmit the data to an external device for feature extraction. For example, the external server **96** may perform the feature extraction or transmit the data to a commercial biometric service provider for feature extraction. In certain embodiments, the biometric service provider may perform feature extraction and maintain a database of biometric features associated with customers' payment information.

[0168] After encryption, the raw or extracted features are transmitted (block **356**) to a database to request identification information and payment information. For example, the data may be sent to a commercial database that maintains templates of biometric features. In certain embodiments, the templates may be acquired from customers when they sign up for the database service. The database service provider may compare the received data to the templates stored within the database to identify the customer. In certain embodiments, the database service provider also may maintain the customer's payment information, such as credit card or bank accounts linked to the customer. In these embodiments, the service provider may transmit both the customer's identity and the payment information to the electronic device. However, in other embodiment, the service provider may only transit the customer's identity, and the merchant may maintain a database of the customer's payment information linked to the customer's identify.

[0169] The electronic device **10** may then receive (block **358**) the identity information for the customer. The information may be received over any of the communication channels available to the electronic device **10**. As mentioned above, the identity information may include the payment information, or it may only include identification information, such as the customer's name and address, among other things. The information may then be displayed (block **360**) on the device **10**. If the information is correct, the device may receive (block **362**) a pay command signifying that the payment should be processed. For example, a merchant may select the graphical element **228** (FIG. **16**) to issue the pay command. If the displayed information if not correct, the device may receive (block **364**) a re-scan request. For example, if the displayed information does not correspond to the customer, the merchant may select a graphical element on the device **10** to instruct the device to perform a re-scan. In response to the re-scan request, the device may erase (block **366**) the data and corresponding identification information and payment information. The device may then be ready to receive (block **352**) new biometric data.

[0170] In addition to receiving payment by credit card, check, or biometric features, the device **10** also may receive a cash payment as illustrated in FIG. **18**. From the payment type selection screen **198**, a merchant may select the cash selection bar **200** to display the cash payment screen **367**. The screen **367** includes instructions **368** that prompt the merchant to enter the amount of cash received using the graphical elements **370**. Each graphical element **370** may correspond to a different cash denomination, such as one, five, ten, or twenty dollars.

[0171] A merchant may select the graphical elements **370** that correspond to the amount of money received, and the selected amount may be displayed within areas **372**. For example, as shown on the screen **367**, the merchant has selected the $5 selection bar **370** to indicate that he has received a five-dollar bill. The corresponding display area **372** displays the number five to indicate that one five-dollar bill has been received. The merchant also has selected the $20 selection bar **370** two times to indicate that he has received two twenty-dollar bills. The corresponding display area **372** displays the number forty to indicate that two twenty-dollar bills have been received. The total amount of cash received may be displayed within the summary bar **152**, which in this case displays the total amount of forty-five dollars.

[0172] To select a denomination more than once, a merchant may simply tap the selection bar the desired number of times. For example, to enter the receipt of two twenty-dollar bills, the merchant may tap the $20 selection bar **370** two times until a "40" is displayed within area **372**. The selection bars **370** also include graphical elements **374** for deleting an entered denomination. For example, in response to selection of the deletion element **374** shown within the $20 selection bar **372**, the area **372** may display an amount that is twenty dollars less than the amount previously displayed. Using the selection bars **370** and graphical elements **374**, a merchant may enter amount of cash received into the device.

[0173] The device **10** also includes an optional storage box **376** that may be attached or affixed to the device **10** to provide a storage area for the cash received. The storage box **376** may be constructed of metal, plastic, or other suitable materials and attached to the device **10** using brackets, clips or other mechanical fasteners. The storage box **376** includes a slot **378** through which the bills may be received. In certain embodiments, the size of the storage box **376** may vary to compensate for larger numbers of bills or to accommodate coins. Furthermore, the selection bars **370** shown on screen **386** may include other values, such as $50 and 25¢.

[0174] In addition to instructions **368**, the title bar **134** includes graphical elements **334** and **379** for navigating between screens. A merchant may select the graphical element **334** to return to the payment selection screen **198**. If a merchant has finished entering the amount of cash received, the merchant may select the graphical element **379** to advance to a change screen **380**. In certain embodiments, selection of the graphical element **379** also may cause the device to verify that the amount of cash input is greater than the amount due. The screen **380** includes a summary bar **152** that displays the amount of change due.

[0175] The change screen **380** allows the merchant to specify how a customer may receive her change. The screen **380** includes a window **382** that lists the change options available. For example, a customer may receive change in the form of store credit, cash, iTunes®, or a gift card. A customer also may donate her change to charity or receive a promotional item instead of receiving change. The window **382** includes selection bars **384** corresponding to each type of change. Instructions **385** prompt the merchant to select the type of change using the selection bars **384**.

[0176] The change may be provided to the customer using various methods. For example, selection of the store credit selection bar **384** may display additional screens that prompt a merchant to enter the customer's identification information, such as an e-mail address, name, or address. The customer's identification information and corresponding store credit

amount may be stored within the external server **96** (FIG. **4**) and applied against a future purchase. Further, in certain embodiments, the store credit amount may be linked to a customer's credit card or electronic device using the near field communication based techniques described herein. For example, the customer's credit card number may be received using near field communication and stored within the external server **96** with the corresponding store credit amount. The store credit amount may then be automatically deducted from the purchase price in a subsequent transaction using the customer's credit card. In other embodiments, the customer may receive an e-mail providing a promotional code for using the store credit.

[0177] To provide change in the form of cash, a merchant may enter the customer's identification information into the device **10** and then instruct the customer to go to a customer service counter to receive her change. The device **10** may transmit the customer's identification information to the external server **96** or may send the identification information directly to a computer or other electronic device located at the customer service center.

[0178] Change also may be given to a customer by crediting one of her existing accounts, such as an iTunes® account. Specifically, selection of the iTunes® selection bar **384** may display screens for entering the customer's account information. If the customer does not have an existing account, the electronic device **10** also may be used to create a new account for the customer. The change amount may automatically be applied in the form of a credit to the customer's account.

[0179] A merchant may select the charity selection bar **384** to display screens allowing a customer to choose a charity to which to donate the change. In certain embodiments, a merchant may have established relationships with charities that a customer may select. The customer may select the charity from the list of charities displayed on the device.

[0180] A merchant may also provide change in the form of a gift card or promotional item. For example, a merchant may select the gift card selection bar **384** to enter the customer's identification information. The device **10** may then transmit the identification information to a customer service center where the customer may pick up her gift card. In other embodiments, the merchant may directly give the gift card to the customer or mail the gift card to the customer's home address. To provide a promotional item as change, a merchant may select the promotional item selection bar **384** to display a screen listing the available promotional items. The customer may then choose a promotional item from the list and receive the item from a customer service center or from the sales merchant. For example, the promotional items may include items such as candy, headphones, and song credits for iTunes®. In certain embodiments, the promotional items may be designed to entice the customer to purchase future items from the store or from one of the merchant's retail partners.

[0181] FIG. **19** is a flowchart depicting an exemplary method **386** for accepting a cash payment as illustrated in FIG. **18**. The method may begin by receiving (block **388**) an input designating the amount of cash received. For example, the merchant may touch areas of the display screen corresponding to the cash denominations received from the customer. The device **10** may then total the amount of cash received and verify (block **390**) that the amount received is greater than or equal to the total amount due. The verification may be performed in response to receiving a pay command, which may be generated by selection of the graphical element **379** shown in FIG. **18**. Software may be included within the device **10** for performing this verification. After a successful verification, the device may display (block **392**) an approval screen or message. In certain embodiments, the approval message may be displayed within the lower summary bar **152** shown on screen **380** in FIG. **18**.

[0182] The device may then calculate (block **394**) the amount of change due. The device may perform the calculation using software included within the device and may display the amount due on a screen of the device. The device **10** may then receive (block **398**) a selection specifying how the change should be received. For example, a customer may verbally specify the change type and the merchant may enter this method into the device, for example using the screen **380** shown in FIG. **18**. After receiving the change selection, if needed, the device may request additional information, such as the customer's identification information. The device may then assign (block **400**) the amount of change to the designated account. The account may be a temporary customer account that allows the customer to receiver her change from customer service, or the account may be in the form of a store credit or gift card. In certain embodiments, the account may be a customer's personal account, such as an iTunes® account, or the account may be associated with a certain charity.

[0183] After payment has been received, by credit card, check, cash, or other suitable method, the merchant may offer incentives, such as rewards, to the customer. The rewards may be designed to promote customer loyalty and entice customers to shop with the merchant in the future. The rewards also may be provided by merchant partners. For example, a magazine company may pay the merchant to offer the company's magazine as a reward. In these embodiments, the rewards may serve as a form of advertising.

[0184] FIG. **20** illustrates a series of screens for providing a reward to a customer. After receiving payment, through cash, near field communication, credit card, check, or other similar method, the device may display the transaction approval screen **240**. From the screen **240**, selection of the done graphical element **118** may cause the device to display a rewards screen **402**. The rewards screen **402** includes instructions **404** prompting the merchant to select the reward type. The reward type may be selected using the selection bars **406** that correspond to specific rewards. For example, a customer may choose to receive a golf magazine, store coupons, a Las Vegas vacation, restaurant coupons, or other type of reward. The customer also may choose to be added to the merchant's mailing list, and may receive rewards for signing up. Of course, many other types of rewards from various types of merchants may be listed on the rewards screen **402**.

[0185] If the customer would not like to receive a reward, the merchant may select the graphical element **408** to end the reward selection process. Selection of the graphical element **408** may return the merchant to the point of purchase main menu **114** shown in FIG. **6**. If the customer chooses to receive a reward, the merchant may select the corresponding selection bar **406**. For example, selection of the golf magazine selection bar **406** may display a screen **410** tailored to the selected reward. The screen **410** includes a window **412** that provides details about the reward. For example, the golf magazine may be received free for three months. If a customer, after seeing the reward details, would not like to receive that reward, the merchant may select a graphical element **416** to return to the reward selection screen **402**.

[0186] If a customer would like to receive the reward, the merchant may enter the customer's information through a keypad **414**. The display window **412** may include information specifying the type of information required to receive the reward. After entry, the information may be displayed within the display area **170**. For example, as shown on screen **410**, the customer's e-mail address has been entered using the keypad **414** and is shown in display area **170**. After successful entry of the customer's information, the merchant may select the graphical element **172** to enter the information. The information may then be transmitted to the external server **96** (FIG. **4**), which in turn may provide the information to the company issuing the reward. In other embodiments, the device **10** may transmit the reward information directly to the company issuing the reward. Of course, instead of an e-mail address, other identification information, such as the customer's mailing address, may be received. Further, the customer's information may be received using other methods and devices described above, such as the NFC device **44** (FIG. **1**), the camera **46** (FIG. **2**) or the biometric sensor **45** (FIG. **1**).

[0187] FIG. **21** is a flowchart depicting an exemplary method **420** for providing rewards as illustrated in FIG. **20**. The method may begin by determining (block **422**) available rewards. The rewards may be determined based on the purchase price, items purchased, partner offers, shopping frequency, payment method, and other preferences or criteria. For example, customers who spend over a specified amount may be offered rewards that are more valuable. In another example, a customer purchasing golf clubs may be offered a golf magazine as a reward. The rewards may be determined based on preferences set by the merchant or by the company offering the reward. After the rewards have been determined, the device **10** may display (block **424**) the rewards. Of course, in certain embodiments, only one set of rewards may be available, and in this case, no determination may be needed. The device **10** may then receive the reward selection (block **426**).

[0188] Based on the reward selection, the device may request and receive (block **428**) the required customer information. The customer information may be specific to the type of reward selected. For example, a magazine subscription may require the mailing address of the customer. In other embodiments, the reward company may request the customer's e-mail address for sending further information about the reward. Of course, if the reward is provided by the store, for example as a promotional item or coupons, the reward may be automatically applied to the customer's next purchase, applied to the current purchase, or physically given to the customer. Further, in certain embodiments, the customer's information may be automatically provided by the device **10**. For example, if the customer has paid by credit card, the merchant may already have the customer's home address. In this case, the device may automatically retrieve the customer's information from the device storage or from the external server.

[0189] After the information has been received, the information may be transmitted to the rewards company (block **430**). The information may be transmitted to the server **96** (FIG. **4**) over one of the communication channels and subsequently transmitted to the rewards company. The device **10** may then log (block **432**) the reward by transmitting the information to the server for recordation. For example, the merchant may track the number of each type of reward provided in order to receive payment from a rewards company.

[0190] After receiving article information and/or payment information, the electronic device **10** may communicate with an external device, such as the external server **96** (FIG. **4**) or an intermediate sales terminal that may be in communication with the external server **96**. As described above with respect to FIG. **3**, the device **10** includes many communication interfaces **56**, **58**, **60**, **62**, **64**, **66**, **68**, and **70** that may be used to communicate with an external device. Through the communication interfaces **56**, **58**, **60**, **62**, **64**, **66**, **68**, and **70**, the device **10** may transmit and/or receive various types of information. For example, the device **10** may query inventory information from a store database. In another example, the device **10** may transmit credit card information to receive authorization for payment. In yet another example, the device **10** may transmit the customer's name and address to schedule delivery of purchased articles.

[0191] FIG. **22** illustrates a communication system **440** for transmitting information between the electronic device **10** and the external server **96** using a local area network. The local area network may serve a relatively small geographic area that encompasses the location of the external server and the articles of merchandise. For example, the local area network may provide communication between the electronic device **10** and the external server when the device and server are located within the same building. In certain embodiments, the local area network may be maintained by the merchant.

[0192] The device **10** may communicate over a wired local area network using the LAN interface **66** or over a wireless local area network using the WLAN interface **68**. The LAN interface **66** may communicate with a corresponding LAN interface **442** located on the external server **96**, and the WLAN interface **68** may communicate with a corresponding WLAN interface **444** on the external server **96**. A peer-to-peer connection may be used to establish a communication path **446** between the device LAN interface **66** and the server LAN interface **442**. The communication path **446** also may include a router or network controller for connecting the device LAN interface **66** to the server LAN interface **442**. In certain embodiments, the device **10** may be connected to the LAN communication path **446** by connecting an Ethernet cable to the device **10** and to a corresponding Ethernet port located along the communication path **446**. Similarly, the WLAN interfaces **68** and **444** may be connected through a wireless connection, such as an IEEE standard 802.11x wireless network, or Wi-Fi hotspot.

[0193] The device **10** and server **96** also may be connected over a local area network through the Internet **450**. Communication path **452** represents connection of the LAN interface **66** to the LAN interface **442** through the Internet **450**. Similarly, communication path **454** represents connection of the WLAN interface **68** to the WLAN interface **444** through the Internet **450**. In certain embodiments, both the device **10** and the server **96** may connect to the LAN or WLAN communication paths. These paths may be established locally allowing the device **10** and server **96** to be located within different geographical regions. For example, the external server **96** (FIG. **4**) may be located in another state or country than the electronic device **10**. The Internet **450** may allow the electronic device **10** and the external server **96** to communicate even though they are not located within the same local geographic region. Further, the Internet **450** may provide access to a database containing inventory and pricing information.

[0194] FIG. **23** illustrates a communication system **456** for transmitting information between the device **10** and the server

96 using an intermediate device **458**. The intermediate device **458** may be a docking station, computer, or other similar device located within the retail area. The intermediate device **458** includes an I/O port **456** that may be connected to the IO port **34** of the device **10**. For example, the I/O port **456** may be a proprietary connection from Apple Inc. that corresponds to the I/O port **34**. The intermediate device **458** also may include a NFC interface **462** that may be connected to the NFC interface **60** of the device **10**. Further, the intermediate device **458** may include a PAN interface **464** that may be connected to the PAN interface **64** of the device **10**.

[0195] The intermediate device **458** may receive information from the device **10** through the interfaces **460**, **462**, and **464**, and then transmit the information using a LAN interface **466** or a WLAN interface **468**. Specifically, the LAN interface **466** may communicate with the LAN interface **404** of the server **96**, and the WLAN interface **468** may communicate with the WLAN interface **406** of the server **96**. Control circuitry **470** may be included within the intermediate device **458** for controlling and routing information within the intermediate device **458**. In certain embodiments, the control circuitry **470** may include a microprocessor or microcontroller.

[0196] Communication between the device **10** and the intermediate device **458** may be established by connecting a cable, such as a serial cable or proprietary connection cable, between the I/O ports **34** and **460**. The connection between the I/O ports **34** and **460** may be generally referred to as a communication path **472**. The device **10** and the intermediate device **458** also may be connected by a NFC communication path **474** that connects the NFC interfaces **60** and **462**. The NFC communication path **474** may be established by bringing the device **10** and the intermediate device **458** within close proximity of each other. The PAN interfaces **64** and **464** may be connected by a PAN communication path **476**. The PAN communication path may include a peer-to-peer connection established over a network such as a Bluetooth network, an IEE 802.15.4 (ZigBee) network, or an ultra wideband network. In certain embodiments, a device identification networking protocol may be used to establish the NFC communication path **474** or the PAN communication path **476**. For example, the working device **10** and the intermediate device **458** may broadcast identification information using Internet protocol to open a peer-to-peer connection.

[0197] Upon receiving information from the electronic device **10**, the intermediate device **458** may transmit the information to the external server **96**. Within the intermediate device **458**, the control circuitry **470** may direct the information to the LAN interface **466** or the WLAN interface **468** for transmission to the server **96**. The LAN interface **466** of the intermediate device **458** may connect to the LAN interface **442** of the external server over a wired communication path **478**. For example, the communication path **478** may include an Ethernet connection. The connection may be a direct connection between the interfaces or may include an intermediate connection device such as a router or network controller. The WLAN interface **468** of the intermediate device **458** may connect to the WLAN interface **44** of the external server over a wireless communication path **480**, such as an IEEE 802.11x wireless network or Wi-Fi network.

[0198] FIG. **24** illustrates a communication system **482** for transmitting information between the device **10** and the server **96** through a cellular system **484**. The cellular system **484** may include one or more antennas integrated into a cellular network maintained by a mobile service provider. Interfaces **486**, **488**, and **490** of the external server **96** may connect to corresponding interfaces **70**, **68**, and **62** of the electronic device **10**. For example, the SMS interface **486** of the server **96** may be connected to the SMS interface **70** of the device **10** over a communication path **500**. In certain embodiments, the external server **96** may include a phone or GSM modem configured to receive the SMS communication. In other embodiments, the external server may receive messages forwarded from a Short Message Service Center (SMSC). The SMSC may be included within the cellular network **484** to control the SMS messages. In yet other embodiments, the server **96** may receive messages forwarded from the SMS gateway of the service provider.

[0199] The USSD interface **490** of the server may be connected to the USSD interface **62** of the electronic device **10** over a communication path **502**. Similar to the SMS communication path **500**, the USSD communication path **502** may transmit information through the cellular network **484**. However, instead of SMS messages, the device **10** may transmit USSD messages. The USSD messages may include short messages that may be transmitted without storage capabilities over the cellular network **484**.

[0200] The device **10** and the external server **96** also may communicate through the Internet **450** over a wide area network communication path **504**. The WAN interface **68** of the electronic device **10** may transmit information to the cellular network **484** that may subsequently transmit the information over the Internet **450** to the external server **96**. The cellular network **484** may include an Enhanced Data rates for GMS Evolution (EDGE) network, a 3G network, or other suitable network.

[0201] In addition to using the Internet **450**, the WAN interfaces **68** and **488** may be connected through a web service **506**, illustrated by a communication path **508**. The web service **506** may allow the device **10** and server **96** to locate each other over the Internet **450**. For example, the device **10** may query the web service **506** to obtain an Internet protocol (IP) address for the server **96**.

[0202] The device **10** and the server **96** may communicate using any of the communication paths illustrated in FIGS. **22-24**. Of course, the communication paths are illustrated by way of example and are not intended to be limiting. Certain embodiments may include only some of the communication paths illustrated, while other embodiments may include all of the communication paths illustrated in addition to other communication paths. Further, the device **10** may include a protocol, such as a High-Speed Downlink Packet Access (HSDPA) protocol, for rapidly downloading data and switching between the communication paths. For example, the device **10** may automatically switch between an EDGE network, a 3G network, and a WLAN network, to maintain increased data transfer rates.

[0203] The device **10** may select a communication path based on the preferences **72** (FIG. **3**) stored within the device. The preferences **72** may determine the available communication paths and the order of selection. For example, the preferences **72** may direct the device **10** to select the communication path with the highest level of security. In another example, the preferences **72** may direct the device **10** to select a communication path with a high rate of data transfer. The preferences **72** also may include different sets of rules for different types of sales transactions. For example, the preferences **72** may be set so that for orders above a certain purchase

price or number of articles the device selects a communication path that uses encryption.

[0204] FIG. **25** illustrates a series of screens for setting the preferences **72** (FIG. **3**). The preferences **72** may be accessed through the settings icon **30** on the home screen **28**. In response to selection of the settings icon **30**, the device **10** may display the settings main menu screen **520**. The screen **520** includes several display windows **522**, **524**, and **526** displaying selection bars for various types of settings. For example, the display window **524** includes selection bars for accessing settings related to audio and visual properties, such as sounds, brightness, and wallpaper. The display window **526** includes selection bars for changing operational parameters of phone functionality, such as general settings, e-mail settings, and phone settings. As will be appreciated, the types of settings are provided for illustrative purposes only, and additional settings may be provided based on individual POP system requirements. Further, additional settings may be viewed using the scroll bar **150**.

[0205] The preferences **72** may be accessed through selection bars within the display window **522**. The network selection bar **527** includes an indicator **528**, shown here as a lock icon, that indicates that the network settings are locked. The locked settings may require a pin or other security input in order to access the network settings. The device **10** may display a pin entry screen **530** in response to selection of the selection bar **527**. The pin screen **530** includes an instruction **532** prompting the user to enter the pin through a keypad **534**. The keypad **534** includes the keys **270** that a user may select to enter the pin code. In certain embodiments, the network settings and preferences may be configured by the device manufacture and may be changed using a pin provided by the manufacture. The merchant may maintain the pin so that only certain employees, such a manager, may change the preferences. If a user does not have the pin code, the graphical element **544** may be selected to return to the settings screen **520**.

[0206] The pin numbers entered using the keypad **534** may be displayed within the display area **536**. However, in other embodiments, symbols, such as an asterisk, may be displayed to conceal the pin number. Once the pin has been entered, the graphical element **542** may be selected to submit the pin code and access the network settings. As will be appreciated, the pin code may be replaced by other, or additional, security features, such as a biometric sensor for reading a fingerprint of an authorized user or an authorization token that may be read using near field communication.

[0207] After the pin code has been entered successfully, the network settings screen **546** may be displayed. The network settings screen **546** includes a window **548** with selection bars **550** for configuring various types of network interface preferences. Status indicators **522** are provided on each selection bar to indicate whether the network interface is turned on or off. For example, the ZigBee selection bar **550** displays an "Off" status indicating that the device may not access a ZigBee network. The selection bars **550** also include arrows **128** that indicate that additional screens may be accessed by selecting the selection bars **550**.

[0208] In response to selection of a selection bar **550**, the device **10** may display screens for configuring a communication interface of the device **10**. For example, selection of the WLAN selection bar **550** may display a WLAN settings screen **556**. The screen **556** includes a display window **558** that shows the status of the WLAN network. A slider **560** may be used to enable or disable the network interface. For example, a user may drag the slider **560** to the right to turn the WLAN interface off.

[0209] The settings screen **556** also includes a window **562** displaying the specific networks that the device has permission to access. For example, the store network is an allowed network, and, therefore, the device **10** may connect to the store network through the WLAN interface **58**. A user may change the allowed networks by selecting the window **562** to display one or more screens for configuring allowed networks. The window **562** may display the allowed networks by the network's name, IP address, or other identification information.

[0210] Another window **564** includes selection bars for determining the connection order. The selection bars allow the connection order to be set based on the data size or the transaction purchase amount. In other embodiments, additional priority preferences may be employed, such as the customer's shopping frequency or the number of items in the sales order. As shown, the WLAN connection is the primary connection for sales transactions with large amounts of data. For medium size data transfers the WLAN network is required, and for small size transfers the WLAN is the secondary network. In certain embodiments, the primary, secondary, and tertiary communication interfaces may be specified from any of the communication interface setting screens. For example, the SMS or USSD interface may be the primary network for small size transactions. The data amounts corresponding to the large, medium, and small sizes may be configured by the device manufacture or by the user.

[0211] Selection of the connection order selection bars may display screens summarizing the preferences for each type. For example, selection of the "large size" selection bar may display the primary, secondary, and tertiary communication interfaces for large size transactions. In certain embodiments, a user may change the priority preferences from these screens. Of course, other preferences, such as the customer's amount of reward points or shopping frequency, may also be used to determine the connection priority.

[0212] The settings screen **556** also includes a display window **566** showing the status of data encryption. Under the current preferences, encryption is required for transmitting data through the WLAN communication interface. In certain embodiments, the encryption may be performed by an SSL protocol executed by the processor. The display window **556** also may display the type of encryption required. In certain embodiments, the encryption preferences may be changed by selecting the encryption selection window **566**.

[0213] FIG. **26** is a flowchart depicting an exemplary method **580** for selecting a communication interface based on the preferences. The method may begin by receiving (block **585**) a transmission request. For example, the device may need to transmit payment information for authorization, or the device may need to query inventory or article identification information from the server **96**. In response to receiving a transmission request, the device may detect (block **584**) available channels or paths for communication. For example, the device may determine whether a WLAN connection is available from the external server. In another example, the device may detect whether a near field communication path has been established. The device **10** may have multiple pending communication channels that allow communication with the server **96**.

[0214] After detecting the available channels, the device may compare (block **586**) the channel to the stored preferences. For example, the device **10** may determine the size of the information to be transmitted or the amount of the payment transaction. Control logic stored within the device **10** may be used to determine the appropriate communication channel and interface based on the stored preferences. The device may then select (block **588**) the communication channel that most closely matches the preferences. For example, as shown in FIG. **25**, if the device detects that the amount of information to be transmitted is of a large size, the device may automatically select the WLAN communication interface. In another example, the device may determine that the payment information to be transmitted is credit card information, and in this case, the preferences may require a LAN connection to be used.

[0215] The device also may encrypt (block **590**) the information prior to transmitting it over the selected path. Of course, depending on the type of the information, encryption may not be required and block **590** may be omitted. For example, if the information is inventory information, no encryption may be required. In certain embodiments, the type of encryption used may depend on the selected path. For example, a high level of encryption may be used if the selected path is a wide area network, while no encryption may be used for a local area network. After encryption, the device may transmit (block **592**) the information over the selected communication path.

[0216] As noted above with respect to FIGS. **22-24**, several communication paths may include transmission through the intermediate device **458**. FIG. **27** illustrates one embodiment of the intermediate device **458**, shown here as a docking station. The docking station **458** includes a base **594** that may be composed of plastic, metal, or other suitable material. The base **594** includes a recess **596** that houses the I/O port **460**. According to certain embodiments, the I/O port **460** may be designed to connect to the IO port **34** included on the device **10**. In certain embodiments, the I/O port **34** of the device **10** may be connected directly to the IO port **460**. However, in other embodiments, a connection cable may be used to connect the I/O port **34** and the I/O port **460**.

[0217] The base **594** also includes the NFC interface **462**. No physical connection may be required when using the NFC interface **462**. For example, the device **10** may be brought within close proximity to the docking station **458** to establish a communication link between the NFC interfaces **60** and **462** using the NFC device **44** of the electronic device **10**. The base **594** also includes the PAN interface **464**. Again, no physical connection may be required. The PAN communication path may be established when the device **10** is brought near the docking station **458**. In certain embodiments, the NFC interface **462** and/or the PAN interface **464** may be used to establish a wireless connection between the device **10** and the intermediate device **458**. Further, the PAN interface and the NFC interface may be used to establish a wireless communication channel directly to the server **96**. The intermediate device **458** also includes the LAN interface **466**. A cable **598**, such as an Ethernet cable, may connect the LAN interface **466** to the LAN interface of the server **96** (FIG. **4**).

[0218] In certain embodiments, the server **96** may be configured to select a communication path for communicating with the device **10**. FIG. **28** is a flowchart depicting an exemplary method **600** for transmitting information and requesting authorization, as generally described in block **110** of FIG. **5**. The method **600** may begin by receiving (block **602**) an authorization request. For example, the authorization request may be received from the device **10** and may be coupled with the transmission of payment information such as credit card account information or checking account information. The server **96** may then determine the recipients (block **604**) of the authorization request. For example, the authorization request may include financier information encoded with the payment information. This information may identify the bank that should receive the authorization request. In certain embodiments, the server **96** may be configured to transmit the information to the merchant's bank for determination of the recipient. In this case, the merchant's bank may decode the financer information encoded with the payment information.

[0219] The method may continue by requesting (block **606**) authorization from the financial institutions. For example, the server **96** may transmit the payment information to the merchant's bank **98** as shown in FIG. **4**. The server **96** may then receive (block **608**) authorization for the payment from the financial institution. As described above, the financial institution may verify that sufficient funds are available for payment before transmitting the authorization to the server. After the authorization is received, the server **96** may select the communication channel (block **610**) or path. Of course, in certain embodiments the server **96** may be configured to transmit the authorization over the same communication path that was used to receive the authorization request. However, in other embodiments, the communication path may be selected by detecting the available communication paths and then selecting the path with the fastest data transmission rate. The selection also may be based on preferences similar to those used by the device **10**, such as the data size or the transaction amount. In certain embodiments, the preferences **72** may be transmitted to the external server **96** and employed by the server to determine the communication path. As will be appreciated, the server **96** may select the communication path from multiple communication channels that may be pending between the device **10** and the server **96**. After a communication channel is selected, the server **96** may then transmit (block **612**) the authorization to the device **10**.

[0220] The server **96** also may perform additional functions such as updating a database (block **614**). For example, the server **96** may update an inventory database based on the articles purchased. The server **96** also may update the amount of payment received for maintaining the financial records of the merchant. In certain embodiments, the server **96** may track analytics information, such as transaction volumes, locations, behavioral contexts, and transaction amounts, for the merchant. The server **96** may update a database with analytics information after each transaction or at the end of a batch period. The server **96** also may update a database of transaction information for credit card providers. For example, the server **96** may compile level **1**, **2**, and **3** data related to the credit card transactions into a database that is provided to the credit card providers when the authorized transactions are sent to the credit card providers as batches. In certain embodiments, the preferences **72** (FIG. **4**) may specify the level of data that is maintained for each type of credit card transaction. For example, a merchant may set the preferences **72** to track and send level **2** data for transactions using government credit cards and to track and send level **1** data for transactions using individual consumer credit cards. The level of data provided for each type of credit card may allow a merchant to pay lower transaction fees. Of course, the

server **96** also may perform many other retail functions associated with bookkeeping and database management.

[0221] FIG. **29** is a flowchart depicting an exemplary method **616** for receiving authorization from the server **96**. The method **616** may be executed by the device **10** and may be used as a method for receiving authorization as shown by block **112** in FIG. **5**. The method may begin by receiving (block **618**) an authorization for payment. For example, the authorization may indicate that the customer has sufficient funds to purchase the articles. After receiving the authorization, the device **10** may display (block **620**) a notification that the transaction has been approved. The notification may be displayed as shown by screen **240** depicted in FIGS. **10**, **11**, and **13**. The device **10** may then receive receipt information (block **622**). The receipt information may include the customer's e-mail address or postal address for subsequent transmission of the receipt. In certain embodiments, the receipt information may be received using the selection bar **250** shown in FIG. **14** as part of the screen **240**. The device **10** may transmit (block **624**) the receipt to the customer. However, in other embodiments, the device **10** may transmit the receipt information to the server **96** for subsequent transmission to the customer.

[0222] The home screen of the device **10** may be customized for sales transactions. FIG. **30** illustrates an alternate embodiment of the device **10** that includes a customized home screen **630**. The screen **630** includes a graphical element **632** that may be selected to perform a sales transaction. Upon selection of the graphical element **632**, the device may enter a near field communication scanning mode. For example, the device **10** may display the screens illustrated in FIGS. **9** and **11** for scanning articles and receiving payment using near field communication. In other embodiments, the device **10** may be configured to automatically enter a bar code scanning mode or a keypad entry mode. Of course, the graphical element **632** may be used to conduct sales transactions by any of the methods described herein, including the use of NFC, the camera, and the biometric sensor.

[0223] The screen **630** also includes several other graphical elements **634**, **636**, **638**, **640**, **642**, **644**, and **646** that may be selected to perform sales related transactions. The graphical elements provided and their corresponding functionality may be tailored to the specific needs of a merchant. For example, the graphical element **634** may be selected to retrieve and display orders saved during a previous transaction. In another example, the graphical elements **636**, **638**, and **640** may be selected to perform a price check, a return, and an exchange, respectively. Details of theses transactions are described below with respect to FIGS. **31-34**.

[0224] The screen **630** also includes graphical elements **642**, **644**, and **646** for obtaining information from and transmitting information to the customer. For example, the graphical element **642** may be selected to retrieve current store specials and offers available to customers. The graphical element **644** may be selected to access the merchant's rewards program. For example, the graphical element **644** may be used to enter a mode for enrolling a customer in the store rewards program or for redeeming awards available to the customer. The graphical element **646** may be selected to enroll a customer in a financing program.

[0225] The screen **630** also may include a lower summary bar containing graphical elements **30** for performing various non-commercial functions, such as accessing a telephone, a mail application, an Internet browser, or a music player. These graphical elements **30** may be customizable by the user and may allow convenient access to the integrated functionality of the device **10**. For example, the phone graphical element **30** may be configured to contact security or a store manager when selected. In another example, the Internet graphical element **30** may be configured to open an internal store website displaying work schedules and store policies.

[0226] FIG. **31** illustrates a process for saving an order that may be retrieved by selecting the graphical **634** shown in FIG. **30**. From the payment screen **198**, a merchant may select the graphical element **206** to display the save order screen **650**. The screen **650** includes instructions **652** prompting the merchant to scan an order identifier. The order identifier may be a customer's name, credit card number, biometric feature, or other identifier that may allow subsequent retrieval of the order.

[0227] The current order to be saved may be summarized within a display window **654**. For example, the display window **654** may display information about the order, such as the name and purchase price of articles in the order. The order identifier may be used to retrieve the current order after the order has been saved. Upon entry or scanning, the order identifier may be displayed within a display area **656**. For example, the customer's name may be displayed after scanning a NFC enabled credit card or electronic device using the NFC device **44** (FIG. **1**) of the electronic device **10**. As shown, the device may default to a NFC scanning mode to receive the order identifier. However, the order identifier also may be entered using a keypad accessed by selecting the graphical element **154**. After the order identifier has been entered and is displayed in the area **656**, the graphical element **658** may be selected to save the order. The device **10** may save and store the order and the corresponding order identifier within the storage **54** (FIG. **3**) of the device **10**.

[0228] The screen **650** also includes graphical elements **660**, **662**, and **664** for entering the order identifier by other methods. Specifically, the graphical element **660** may be selected to enter the order identifier using the camera **46** (FIG. **2**). The camera may be used to take a picture of the customer that may be stored as the order identifier. The camera also may be used to take a picture of the customer's credit card, driver's license, or other identifier using techniques similar to those described with respect to FIG. **13**. The graphical element **662** may be selected to receive a biometric feature, such as a fingerprint, through the biometric sensor **45** (FIG. **1**). The biometric feature may be stored as the order identifier. The graphical element **664** may be selected to enter the order identifier using the scanner **48** (FIG. **2**). For example, the scanner **48** may be used to scan a barcode on a driver's license to input the customer's name as the order identifier. The scanner **48** also may be used to scan a barcode located on an article in the sales order to store that barcode as the order identifier.

[0229] FIG. **32** illustrates a series of screens for retrieving a saved order. From the home screen **630**, the graphical element **634** may be selected to begin the order retrieval process. In response to selection of the graphical element **634**, the device may display an order selection screen **670**. The screen **670** includes instructions **672** prompting the merchant to select an order for retrieval. The screen **670** may include a selection bar **674** displaying order identifiers for the saved orders. In other embodiments, for example, when the order identifier is a picture of the customer, the screen **670** may display the pic-

tures. The merchant may then select the selection bar **674**, picture, or other type of order identifier corresponding to the customer's order.

[0230] The screen **670** also includes selection bars **676** for retrieving the order through another input device, such as the NFC device **44** (FIG. **1**), the biometric sensor **45** (FIG. **1**), or the scanner **46** (FIG. **2**). A merchant may select one of the selection bars **676** to retrieve the order using a corresponding input device. For example, selection of the NFC selection bar **676** may allow an order to be retrieved through near field communication by scanning the same NFC enabled device or credit card that was used to input the order identifier. In a similar manner, the biometric selection bar **676** may be selected to retrieve the order by scanning the same biometric feature that was used to input the order identifier. Further, the order may be retrieved by scanning an article or merchandise in the customer's order using the bar code scanner **48** (FIG. **2**).

[0231] In response to selection of the customer's order, for example, through a selection bar **674** or an input of the corresponding order identifier, the order may be displayed on a screen **678**. The screen includes a display area **680** displaying the name of the customer. In other embodiments, other identification information, such as the customer's rewards account number, credit card number, or address, may be used. A window **682** displays the articles in the customer's order. Graphical elements **142**, **144**, **146**, and **148** may be selected to modify the articles in the order. For example, the graphical elements **142** and **144** may be selected to decrease the quantity of an article. The graphical elements **146** and **148** may be selected to increase the quantity of an article. Further, a graphical element **684** may be selected to add additional articles to the order by returning to a scanning mode or other type of article entry mode. In this mode, the NFC device **46** (FIG. **1**), the scan device **48** (FIG. **1**), the keypad **162** (FIG. **6**), or similar input device may be used to add items to the order. If the customer is ready to pay for the order, the merchant may select the pay graphical element **686** to display the payment screen **198**. The payment may be entered and processed using the techniques described above with respect to FIGS. **5-19**.

[0232] FIG. **33** is a flowchart depicting an exemplary method **688** for saving an order as illustrated in FIG. **32**. The method may begin by receiving (block **690**) a storage command. For example, the storage command may be received when a user selects the graphical element **206** shown in FIG. **32**. The device **10** may then assign (block **692**) an identifier to the order. For example, the identifier may be entered using a keypad on the electronic device or the identifier may be entered using near field communication, biometric scanning, or other suitable techniques. The device **10** may then store (block **694**) the order and the corresponding order identifier. For example, the orders may be stored within the storage **54** (FIG. **3**) of the device **10** until subsequent retrieval. In certain embodiments, the orders may be stored for a designated time period and deleted after expiration of that period, for example after one week.

[0233] The method may continue by displaying (block **696**) the saved orders. For example, the orders may be displayed in response to selection of the saved orders graphical element **634** shown in FIG. **32**. The device **10** may then receive (block **698**) an order identifier. The order identifier may be received through one of the communication interfaces of the device or through a keypad on the device. For example, a selection bar corresponding to the order identifier may be selected using a touch screen or the order identifier may be scanned using near field communication. The device **10** may then retrieve (block **700**) the order associated with the order identifier. For example, the device **10** may retrieve the order from the storage **54** (FIG. **3**) of the electronic device **10**. In certain embodiments, the retrieved order may then be displayed on a screen, such as the screen **678** shown in FIG. **32**.

[0234] In addition to performing a sales transaction, the device **10** also may perform other sales related transactions such as processing a return, performing an exchange, or executing a price check. FIG. **34** illustrates a method of processing a return. From the home screen **630**, the graphical element **638** may be selected to begin the return process and display a return identification screen **702**. The screen **702** includes instructions **704** prompting the merchant to scan the article to be returned. The article may be scanned by bringing an NFC tag located on the item in close proximity to the device **10**. In another embodiment, the article may be scanned by reading a barcode for the article. The default scanning mode may be configured by the device manufacturer or by a merchant through a settings menu.

[0235] A window **706** displays the identification information, such as the name and price, for the scanned article. In certain embodiments, the window may be selected to bring up additional information about the item. Graphical elements **142** and **146** may be used to increase or decrease the quantity of the item scanned. For example, if a customer wishes to return two identical type items, only one of the items may be scanned and then the graphical element **146** may be selected to increase the quantity of the item.

[0236] The article to be returned also may be identified using a keypad accessed by selecting the graphical element **154**. For example, a merchant may enter the SKU number using the keypad. Of course, other methods of identification, such as biometric features or payment information, may be used to enter the identification information for the article to be returned. For example, the biometric graphical element **710** may be selected to identify the article using a customer's biometric features. Specifically, if a customer paid for the item using her biometric fingerprint, the customer may then input her biometric fingerprint to bring up her recent transactions. The merchant may then select the article to be returned from the articles listed on a transaction summary screen. The item also may be identified through the payment method by selecting the graphical element **712**. Selection of the graphical element **712** may display a screen for entering information corresponding to the payment method used to purchase the article. For example, a customer may tap the same NFC based credit card used to purchase the article to the device **10** to bring up her recent orders. The article may then be selected from articles listed on a transaction summary screen.

[0237] After the article for return has been entered into the device **10** and displayed in the window **706**, the merchant may select the graphical element **714** to continue processing the return. Upon selection of the graphical element **714**, a credit screen **716** may be displayed. The screen **716** may include a display window **718** that lists the various types of credit available to the customer. For example, the customer may receive store credit for the article, or the credit amount may be applied to the customer's credit card or debit card. Further, the customer may receive a cash refund or have one of her accounts, such as an iTunes® account credited with the refund amount.

[0238] The available credit types may be shown in selection bars **720** within the display window. The credit type may be

selected through the corresponding selection bar **720**. Instructions **722** prompt the merchant to select the type of credit. The merchant also may return to the previous screen by selecting the graphical element **724**. Selection of a selection bar **720** may display screens for processing that type of credit. For example, selection of the credit card selection bar **720** may display the credit card entry screen **218**. The screen **218** may be the same screen used to enter credit card information for completing a sales transaction. The title bar **134**, however, may include different navigational graphical elements **726** and **728**. After the credit card information has been entered, for example, using the keypad **230** (FIG. **10**), the NFC device **44** (FIG. **1**), the scanner **48** (FIG. **2**), the camera **46** (FIG. **2**), or the biometric sensor **45** (FIG. **1**), the graphical element **726** may be selected to process the return and apply the credit to the displayed credit card. However, if none of the credit types is acceptable to the customer, the graphical element **728** may be selected to return to the credit screen **702**.

[0239] Methods similar to those shown in FIG. **34** also may be used to perform a price check or an exchange. For example, to perform an exchange, the article to be exchanged may be entered techniques similar to those described for FIG. **34**. Then, instead of issuing a credit, the replacement article may entered or scanned using the NFC device **44** (FIG. **1**), the scanner **46** (FIG. **1**), the camera **48** (FIG. **1**), the keypad **230** (FIG. **10**), or other techniques described herein. To perform a price check, a screen similar to the screen **702** shown in FIG. **34** may be used to enter article identification information and display the purchase price for the article.

[0240] Referring now to FIG. **35**, the home screen **630** also may include the graphical element **642** that may be selected to display a screen **730** describing current offers available to customers. The screen **730** may include a window **732** that includes selection bars for displaying hot deals, such as current sales and limited time offers available in the store. The window **732** also may include a selection bar for displaying coupons available for store merchandise. In certain embodiments, the coupons may be e-mailed to the customer upon entry of the customer's e-mail address. Further, the coupons may be transmitted using near field communication or other techniques described herein.

[0241] The screen **730** also includes a selection bar **734** for displaying current store rewards. The rewards may be offered by the merchant or by companies partnering with the merchant. In response to selection of the store rewards selection bar **734**, a screen **736** may be displayed showing the available rewards. The screen **736** includes instructions **738** prompting the merchant to enter the customer's account number. The account number may be a number generated by the merchant and assigned to the customer when the customer signs up for the merchant's reward program. The account number also may be based on a customer's personal information, such as an e-mail address or driver's license number.

[0242] The account number may be entered using a keypad accessible through the graphical element **154**. The account number also may be entered using near field communication. For example, the device may be used to scan a customer's NFC enabled credit card, electronic device, or rewards card linked to the customer's rewards account. The account number also may be entered using the bar code scanner **48** (FIG. **2**) or the camera **46** (FIG. **2**).

[0243] The available rewards for the entered account number may be displayed within a window **742**. The rewards may include customized rewards generating using information from the customer's account, as well as general rewards available to all customers that are members of the rewards program. For example, customers who are frequent shoppers may receive more valuable rewards than occasional shoppers may. Further, the rewards may be customized based on a customer's previous purchases or spending habits.

[0244] The rewards shown within the window **742** may be rewards provided by the merchant or by companies partnering with the merchant. For example, the merchant may offer rewards, such as 10% off a purchase of two hundred dollars, to entice customers to spend more money. A company may offer rewards as a form of advertising. In certain embodiments, the company may pay the merchant to display the company's rewards on the device. In one example, American Express may offer five hundred rewards points to customers paying with their American Express card. Another company may offer a complimentary issue of a magazine to entice a customer to become a subscriber. In yet another example, a customer may be offered a dinner after signing up to receive marketing e-mails from a company. Additional information about each reward may be viewed by selecting individual selection bars **744** that display rewards within the display window **742**.

[0245] The rewards also may be transmitted to a customer's electronic device to allow a customer to review the rewards at her leisure. For example, the rewards may be sent to the customers e-mail by selecting a graphical element **746**. In response to selection of the graphical element **746**, the device **10** may transmit the reward information to an e-mail address associated with the account number show in the display window **740**. The reward information also may be sent to a customer's NFC enabled electronic device by selecting a graphical element **748**. The graphical element **748**, in response to selection, may display a NFC screen **750**. The screen **750** may include instructions **752** prompting the customer to tap her NFC enabled device to the electronic device **10** to establish a near field communication link. A display window **744** may indicate that a NFC link has been established and that the rewards information is being transmitted. The screen **750** also includes a graphical element **756** that may be selected to cancel the transmission and return to the rewards screen **736**.

[0246] Of course, the rewards may be transmitted to the customer in a variety of methods in addition to e-mail and near field communication. For example, the device may transmit a signal over one of the communication paths (FIGS. **22-24**) to an electronic device at a customer service center to print the rewards for pickup by the customer. Rewards that are discounts (for example, 10% off) may be stored within the device **10** until the customer is ready to check out. Upon checkout, the rewards may be automatically applied to the customer's purchase price.

[0247] FIG. **36** is a flowchart depicting an exemplary method **760** for transmitting rewards to a customer as illustrated in FIG. **35**. The method may begin by receiving customer information (block **762**). For example, the customer information may include a customer's account number for the rewards program. The device **10** may then retrieve (block **764**) data based on the customer information. The data may represent the customer's spending habits, for example, the average purchase price over the past year and the number of purchases made recently. The data also may include the specific items or types of items purchased recently. For example, if the merchant is a department store, the data may include the

number of purchases made in the electronics department and the home furnishings department. In certain embodiments, the data may be obtained from the external server **96** over one of the communication paths (FIGS. **22-24**).

[0248] Based on the data, the device may determine (block **766**) the rewards available to the customer. Of course, the determination also may be performed by the external server **96**. In these embodiments, the server **96** may transmit the available rewards to the device **10**. Once the rewards have been determined, the device may display (block **768**) the rewards. For example, the rewards may be displayed on the screen of the device **10**. The device **10** may then receive (block **770**) a transmission request. The transmission request may occur automatically in response to entry of the customer's account number, or a transmission request may occur in response to selection of a graphical element. For example, the merchant may select the transmission method, such as NFC, which serves as the transmission request. In response to the transmission request, the device **10** may transmit (block **772**) the reward information to the customer. As noted above, the rewards may be transmitted using a variety of methods such as using the customer's e-mail address or near field communication.

[0249] The POP device **10** also may be used to enroll customers in a rewards program. As shown in FIG. **37**, selection of the rewards graphical element **644** may display a rewards sign up screen **774**. The screen **774** includes instructions **776** prompting the merchant to enter the customer's information. The customer's information may be entered by tapping a customer's NFC enabled device, such as an electronic device or a smart card, to the device **10**. The customer's information may then be received through near field communication and displayed within the windows **778**. Of course, a keypad also may be used to enter the customer's information by selecting the graphical element **154**.

[0250] The lower summary bar **152** includes graphical elements **782**, **784**, and **786** for entering the customer's information using the camera **48** (FIG. **2**), the scanner **48** (FIG. **2**) and a device link, respectively. The graphical element **782** may be selected to display screens for using the camera to capture the customer's information. For example, the camera may operate in conjunction with image processing software to obtain the information from a picture of the customer's driver's license or credit card.

[0251] The customer's information also may be entered using biometric features by selecting the graphical element **784**. For example, a customer may place his finger on the biometric sensor **45** (FIG. **30**) to enter his information. The customer's information also may be entered using a device identification protocol by selecting the graphical element **786** to establish a device link as described below with respect to FIGS. **39** and **40**.

[0252] After the customer's information has been entered, the merchant may select the graphical element **780** to enter the information and display a screen **788** for configuring the customer's reward preferences. The screen **788** includes a display window **790** that shows preferences that may be selected using slide bars **792**. The slide bars **792** may be actuated between the yes and no positions using the touch screen to select or deselect each of the options listed. For example, as configured, the customer may receive weekly specials and partner offers thorough e-mail. However, the customer has chosen not to receive weekly tips. Of course, additional preferences may be displayed and configured based on the merchant's individual needs.

[0253] A merchant also may offer a customer a reward for enrolling in the rewards program. These rewards may be shown in a display window **794**. For example, in this embodiment, the merchant has chosen to send the customer a dining coupon. In certain embodiments, the window **794** may be selected to display additional information describing the reward. The window **794** includes graphical elements **796** and **798** for accepting or rejecting reward. The graphical element **796** may be selected to accept the reward. In response to selection of the graphical element **796**, the device may transmit the dining coupon to the customer's e-mail account. The graphical element **798** may be selected to reject the reward. After the preferences have been selected, a merchant may select the graphical element **800** to exit the preferences screen **788** and return to the home screen **630**.

[0254] FIG. **38** is a flowchart depicting an exemplary method **804** for setting preferences for a customer's reward account as illustrated in FIG. **37**. The method may begin by displaying (block **806**) an information prompt. For example, the information prompt may be displayed in response to selection of the rewards graphical element **644** shown in FIG. **37**. The prompt may request entry of information through near field communication, through the scanner, or through another default input device, such as the camera. The device **10** may then receive (block **808**) the customer's information through the default input or through another input selected using the graphical elements. The customer's information may include the customer's name, mailing address, e-mail address, telephone number, and/or other similar information.

[0255] The device **10** may then determine whether all of the information has been received (block **810**). Of course, certain types of information, such as a mobile phone number, may be optional. In these situations, the device **10** may be configured only to verify that the required information has been received. If all the information has been received, the device may store (block **812**) the information. However, if not all of the information has been received, the device **10** may prompt (block **814**) the merchant for the missing information. For example, the prompt may be displayed within a display window notifying the merchant of the type of information that is missing. After receiving (block **816**) the information, the device may store the information (block **812**).

[0256] The information may then be used to determine (block **818**) the available rewards. For example, in certain embodiments, the rewards may be determined based on the customer's spending habits, types of purchases, and proximity to the store location. In other embodiments, the rewards may be determined based on the number of rewards available to the merchant for that week. For example, a merchant may offer a different type of reward each week and may only offer a limited number of certain rewards.

[0257] The device **10** may then display (block **820**) the preferences and rewards. The preferences may be related to the customer's preferred communication method, types of communications, and frequency of communications. The device may then receive and store the customer's preferences (block **822**). In certain embodiments, the preferences may be transmitted to an external device, such as the server **96** for storage. The device **10** may then transmit (block **824**) the reward to the customer. For example, the reward may be automatically transmitted to the customers e-mail upon completion of the rewards enrollment process.

[0258] FIG. **39** illustrates a series of screens for receiving customer information using a device link. The device link may be accessed by selecting the graphical element **786** from the rewards screen **774**. Although the device link is shown in the rewards context, the device link may be used to establish communication links in any of the applications discussed herein. The device link may employ a device identification networking protocol, such as Bonjour® by Apple Inc., installed on the POP device **10** and another external device. The protocols may allow each device to broadcast their identification information using internet protocol (IP). The devices may open a peer-to-peer connection between the devices using the broadcasted identification information.

[0259] In response to selection of the device link graphical element **786**, a device link screen **830** may be displayed. The screen **830** includes selection bars **832** that display detected devices available for communication. These devices may be identified based on broadcasted identification information. Above the selection boxes **832** is an instruction prompting the merchant to select a device for connection. An indication **834** shows the currently selected device, in this case an iPhone® 3G.

[0260] The screen **830** also includes selection bars **836** showing the types of communication paths available between the electronic devices. In certain embodiments, the communication paths that are unavailable for selection may be grayed out or not displayed within the selection bars **836**. Instructions, located above the selection boxes **836**, prompt the merchant to select a communication path. Selection of a selection box **836** may automatically connect the two devices through the displayed communication path. As shown, the PAN communication selection box **836** has been selected to connect the devices over a personal area network.

[0261] The device may also display a status screen **838** upon selection of a communication path. The screen **838** includes a display window **840** indicating the status of the device link that includes identifying the external device connected to the device **10** as well as the transmission status. As shown, the display window **840** indicates that the device **10** is linked to an iPhone®. The display window **840** also indicates that the electronic device **10** is currently receiving information, such as customer information, from the iPhone®.

[0262] After the information has been received, the information may be displayed on a screen **844** within the display areas **778**. In certain embodiments, the information shown with the display areas **778** may be edited by selecting these areas. For example, selection of an area **778** may bring up a keypad for editing the information. Once the information is correct, the merchant may select the graphical element **780** to enter the information and display the preferences screen **778**. As described previously with respect to FIG. **37**, the customer may then select the preferences shown in the display area **790**. The customer also may receive a reward shown in display window **794** in appreciation for signing up for the rewards program. The merchant also may cancel the signup process by selecting the graphical element **802** to exit the device link mode and return to the rewards screen.

[0263] FIG. **40** is a flowchart depicting an exemplary method **846** for establishing a device link as illustrated in FIG. **39**. The method may begin by searching (block **848**) for devices. The searching may occur in response to selection of the device link graphical element **786** shown FIG. **39**. In other embodiments, the searching may occur automatically when the device needs to receive information. For example, when the device needs to acquire payment information, the device may automatically begin searching for devices. The searching may occur using a device identification network protocol stored within the device **10**. The searching also may include broadcasting the device's own identification information and searching for other devices broadcasting their own identification information using internet protocol.

[0264] After devices have been identified, the device **10** may display (block **850**) the available devices. In certain embodiments, a list of available devices, indicating their type, model number, or other identification information, may be displayed on a screen of the device **10**. In other embodiments, the device **10** may display a master list of devices and indicating which devices are available from the list using shading or other indicators. The device **10** may then receive (block **852**) a selection indicating a device with which to establish a connection. For example, the device may receive a user selection of one of the selection bars **832** shown in FIG. **39**. The device **10** may then determine and display (block **854**) available communication paths between the POP device **10** and the selected external device. The communication path may be determined based on service information received from the external device. For example, the external device may broadcast the applications that it uses. The device **10** may then determine which applications are compatible for establishing a communication path. The communication path may be established through one of the communications interfaces shown in FIG. **3**, such as the PAN interface **64**, the NFC interface **60**, the LAN interface **66**, the WAN interface **68**, or other suitable interface.

[0265] The method may then continue by initiating (block **856**) communication with the selected device. Once communication has been established, the device **10** may request (block **858**) information. For example, the information may include customer identification, such as a customer's name and address, for enrolling the customer in a rewards program. In another example, the information may include payment information, such as a credit card account number and expiration date. The device may then receive (block **860**) the information over the selected communication path and may display the information to allow a customer or merchant to verify that the accuracy of the information.

[0266] The POP device **10** also may be used to enroll a customer in a financing program. For example, the POP device may be used to apply for a store's credit card or to apply for a loan from a bank or other financial institution. The financing application process may begin with selection of the financing graphical element **646**, shown on the screen **630** in FIG. **41**. In response to selection of the graphical element **646**, a financing screen **862** may be displayed. The screen **862** includes instructions **864** prompting the merchant to select the desired type of financing. Selection boxes **866** display the available types of financing. The financing types may include a store credit card, commercially available credit cards, a credit union, and a bank loan, among others. In certain embodiments, the merchant may receive a percentage of the loan amount from the financing established with a bank or financial institution. For example, if the merchant is a car dealer, the car dealership may have an agreement with a bank to provide automobile loans. The car dealer may receive compensation for enrolling customers in the bank's loan program.

[0267] In response to selection of a type of financing, a financing information screen **870** may be displayed that

requests entry of information needed to apply for the selected type of financing. The screen **870** includes instructions **872** prompting the merchant to input the necessary information. The information may be input using a variety of methods including, but not limited to, using a keypad, transmitting the information through near field communication, or scanning a barcode containing the information using a scanner. Upon entry, the information may be displayed within the display area **874**. If the information is correct, the merchant may select a graphical element **876** to apply for that type of financing. However, if the customer would like to select a different type of financing, the merchant may select a graphical element **878** to return to the financing screen **862**.

[0268] In response to selection of the graphical element **876**, a status screen **880** may be displayed. The screen **880** includes a display window **882** that indicates the status of the application process. The display window may show whether the application has been approved or rejected, the credit line amount, and other applicable information. Graphical elements **884** and **886** allow a customer to accept or decline the credit offer. Further, the customer may choose to see other available offers by selecting a graphical element **888**. The other offers may be determined based on the customer's entered information. For example, the other offers screen **890** may include offers for a MasterCard or Capital One credit card that have interest rates and terms corresponding to a customer's income level and occupation. Display windows **892** and **894**, included on screen **890**, show information describing the other available offers. The information may include the interest rate, credit amount, and the name of the issuing financial institution, among other things. Additional details for the other available offers may be viewed by selecting the corresponding display window.

[0269] FIG. **42** is a flowchart depicting an exemplary method **900** for applying for customer financing. The method may begin by displaying (block **902**) available financing options. The available financing options may be determined based on the credit card companies, banks, credit unions, and other financial institutions that have financing agreements with the merchant. In certain embodiments, the merchant may receive a fee for singing the customers up for a financial institution's financing.

[0270] After displaying the financing options, the device may receive (block **904**) a selection indicating the financing type. Each financing type may have a corresponding screen, or series of screens, stored within the device **10** or within an external device such as the server **96**. The screens may display prompts requesting the information required to apply for financing. For example, the requested information may include the customer's name, address, and social security number, as well as the customer's amount of income and debt.

[0271] Upon receiving (block **908**) the information, the device may transmit the information to the financial institution or financier (block **910**). In certain embodiments, the information may be transmitted to an external device, such as the server **96**, for subsequent transmission to the financier. However, in other embodiments, the information may be transmitted directly to the financier, over the Internet, for example. The financier may then perform a credit check or other verification processes to approve the customer for financing.

[0272] In response to receiving an approval (block **912**), the device **10** may display an approval message. The device **10** may then determine and display (block **914**) other offers. For example, the device **10** may use the customer's information that was provided to apply for financing to determine other offers that may be available to the customer. The customer may then accept the selected financing offer or the other displayed financing offers. After the device receives acceptance of a credit offer (block **916**), the device may notify (block **918**) the financier. The device also may store the financing information, particularly the amount of credit, for reference during the purchase process.

[0273] FIG. **43** illustrates a system **920** that may be used to conduct a sales transaction. The system **920** may allow a customer to scan articles and pay for the articles without the assistance of a salesperson. The system **920** also may operate in conjunction with the merchant's security system to impede the removal of unpurchased articles from the store. For example, the articles may include security tags that can be deactivated after payment to prevent an alarm from sounding when the articles are removed from the store.

[0274] The system **920** includes a container **922** that may be connected with the POP device **10**. The container may be constructed of plastic, fabric, metal, or other suitable material, and may be used to hold articles of merchandise **182**. The container **922** includes an inner volume **924** in which the articles **182** may be placed. Handles **926** may extend from the container **922** to facilitate portability. The container **922** includes a receptacle **928** for receiving the device **10**. The receptacle may include a base that includes a connection port, such as a serial connection for connecting to an I/O port, such as the I/O port **34** (FIG. **2**) of the device **10**. The POP device **10** may be inserted into the receptacle **928** to connect the POP device **10** to the container **922**. The receptacle **928** also may provide support for the device **10** when the device **10** is attached to the container **922**.

[0275] The container **922** also includes an integrated NFC device **930**. The NFC device **930** may include a narrow strip of NFC receivers disposed around the upper perimeter of the container **922**. Wires, or a wireless network, may connect the NFC device **930** to the receptacle **928**. The NFC device **930** may read information from the NFC tags **184** and transmit the information to the POP device **10** through the receptacle **928**. In certain embodiments, the communication may be received through the NFC interface **60** of the POP device **10**. The NFC device **930** also may write information to the NFC tags **184** to deactivate security features of the tags **184**. Of course, the location and number of the NFC devices may vary.

[0276] In operation, the NFC device **930** may acquire identification information from the NFC tags **184** located on the articles **182** as the articles **182** are placed within the container **922**. In certain embodiments, the NFC device **930** may include a memory for storing the identification information for the articles. The identification information may then be transmitted to the POP device **10** after the articles **182** have been placed within the container **922**. However, in other embodiments, the NFC device **930** may directly transmit the information to the device **10** through the receptacle **928**. In these embodiments, identification information may be transmitted when each article **182** is placed within the container **922**. Regardless of when the identification information is transmitted, the system **920** allows articles **184** to be scanned as they are placed into the container **922**.

[0277] As shown, the system **920** allows the device **10** to be removed from the container **922**. The separate device **10** and container **922** may provide shopping flexibility by allowing a merchant to give the POP device **10** to a salesperson to per-

form the scanning or to connect the POP device **10** to the container **922** so that a customer may scan the articles by placing the articles into the container **922**. The containers **922** may be an auxiliary item that a merchant may purchase to expand an existing sales transaction structure employing one or more POP devices **10**. A salesperson also may remove the POP device **10** to perform handheld scanning if a customer is having difficulty operating the container **922** and POP device **10**. Of course, the POP device **10** also may be integrated into the container **922**. For example, the components of the POP device **10** may be built into the container walls.

[0278] FIG. **44** illustrates screens that may appear on the device **10** while connected to the container **922** shown in FIG. **43**. To begin a sales transaction, the device **10** may be inserted into the receptacle **928** to display the connection screen **932**. The screen **932** includes a window **934** notifying a customer or merchant that a connection has been established. The screen **932** also includes a window **936** prompting the customer to place items into the basket or container. In response to detecting placement of articles **182** within the container **922**, the device **10** may display an order summary screen **938**. The screen **938** includes a display window **940** that may display information about the scanned articles. The display window **940** may include several selectable areas showing the name of the article, its price, and other descriptive information. An area for an article may be selected to show additional information about the article, such as the article serial number and product description. The screen **938** also includes a summary bar **942** that displays the current total purchase price for the articles that have been scanned.

[0279] After placing the articles within the container **922**, the customer may select a payment option using the graphical elements **944** and **946**. To transmit payment information while the device **10** is disconnected from the container **922**, the customer may select the graphical element **944**. Payment while the device **10** is disconnected may facilitate scanning of payment information using the camera **46** (FIG. **2**), the scanner **48** (FIG. **2**), or the biometric sensor **45** (FIG. **1**). Disconnection of the device **10** also may facilitate manual entry of payment information using a keypad of the device **10**. The customer also may pay while the device **10** is connected to the container **922** by selecting the graphical element **946**. Near field communication based payment may be particularly well suited to payment while the device **10** is connected to the container **922**. For example, a customer may tap an NFC enabled card or device to the POP device **10** while the device is located within the receptacle **928** (FIG. **43**). Of course, NFC based payment also may occur while the device **10** is disconnected from the container **922**.

[0280] FIG. **45** illustrates processing of a payment while the device **10** is connected to the container **922**, as shown in FIG. **43**. To begin the payment process, a customer may select the graphical element **946** included on the summary screen **938** to display the payment screen **198**. The payment screen **198** includes the selection bars **200** for selecting a payment method as described above with respect to FIG. **10**. The instructions **202** prompt the user to select a type of payment method. The customer may select one of the selection bars **200** to pay using the corresponding payment method as previously described with respect to FIGS. **6-19**. For example, the customer may select the credit card selection button **200** to display the credit card payment screen **209**.

[0281] After selecting a card type, the card entry screen **218** may be displayed with instructions **224** prompting the user to enter the card information. As described previously with respect to FIGS. **6-19**, the card information may be entered using the keypad **162** (FIG. **6**), the near field communication device **44** (FIG. **2**), the camera **46** (FIG. **2**), the scanner **48** (FIG. **2**), or other techniques described herein. After the payment information has been entered, the user may select the graphical element **228** to transmit the information for approval. Once the transaction has been approved, the approval may be displayed on the transaction summary screen **948** within a window **950**.

[0282] The screen **948** also includes a window **952** that displays a message indicating that the device is currently deactivating the security tags. The window **952** instructs the user not to disconnect the device **10**. During this process, the device **10** may send write signals to the NFC device **930** of the container **922**. The NFC device **930** may then transmit these signals to the NFC tags **184** located on the articles **182** to deactivate the NFC tags. For example, the tags may be encrypted with security information that when activated works in conjunction with the store's security system to sound an alarm if the tags are removed from the store without being deactivated. After the tags have been deactivated, the customer may package the purchased articles and remove them from the store.

[0283] A similar process may be used to process a payment while the device **10** is disconnected from the container **922**. The same screens shown in FIG. **45** may also appear when the device **10** is receiving payment information while disconnected. However, the screens may include additional window or prompts instructing the customer to connect the device **10** to the container **922** to allow deactivation of the security features.

[0284] FIG. **46** is a flowchart depicting an exemplary method **960** for performing a sales transaction using the system **920** shown in FIG. **43**. The method may begin when the device **10** senses (block **962**) connection to the container **922**. The system **920** may then receive (block **964**) one or more articles, such as the articles **184** shown in FIG.**43**. For example, the articles may be received when a customer places them within the container **922**.

[0285] The NFC device **930** may then read (block **966**) the NFC tags located on the articles to retrieve the tag information. The tag information may include an identification number or code that may be used to identify the article and obtain the article identification information, such as the article serial number and purchase price. In other embodiments, the tag information may include the article identification information. The tag information may then be stored (block **968**) within the NFC device **930** or within the device **10**. For example, the information may be stored within a memory of the NFC device **930**. In another example, the device **930** may transmit the identification information to the device **10** where it may be stored within the storage **54** (FIG. **3**). The device **10** may then retrieve (block **970**) article information associated with the tag identification information. For example, the device **10** may transmit the tag identification information to an external server, such as server **96** (FIG. **4**) using the communication interface **56** (FIG. **3**) to obtain the price information for the article. In other embodiments, the article identification information may be included within the tag information. In these embodiments, the identification information may be retrieved or extracted from the stored tag

information. As noted above, the device **10** may use the identification information to calculate a purchase price for the articles.

[0286] The method may continue by acquiring (block **972**) payment information. For example, the device **10** may acquire a customer's credit card information using near field communication. In other embodiments, the payment information may be received through the keypad, the camera, the scanner, or other suitable means. The device **10** may then transmit (block **974**) the payment information and request authorization. For example, the information may be transmitted to the financial institutions **98** and **100** shown in FIG. **4** using the external server **96**. The device **10** may then receive (block **976**) authorization for payment. The authorization may be received over one of the communication paths shown in FIGS. **22-24**.

[0287] After receiving the authorization, the device **10** may then determine whether it is connected to the container **922** (block **978**). If the device is connected, the device **10** may deactivate (block **980**) the NFC tags located on the articles. For example, the device **10** may transmit a signal to the NFC tags, either directly or through the NFC device **930**, to deactivate security features included on the tags. If connection is not detected, the device **10** may prompt a user (block **982**) to connect the device **10** the container **922**. Upon sensing (block **924**) the connection, the device **10** may deactivate the tags (block **980**).

[0288] After deactivation, the device **10** may determine whether all of the tags that have been stored have been deactivated (block **986**). For example, the device **10** may transmit a signal to all of the tags in the container **922** to determine each tag's activation status. The device **10** may then determine whether a deactivated status has been received for each tag stored in the device **10** or in the NFC device **930**. If all of the tags have been deactivated, the device **10** may prompt (block **988**) the user to remove the items from the basket. For example, the customer may place the articles **184** within the customer's personal shopping bag or within bags provided by the merchant to remove the articles from the store. If a tag that has been stored does not have a deactivated status, the device **10** may display an error message (block **990**). The error message may prompt the customer to contact a salesperson to address the problem with the deactivation process.

[0289] FIG. **47** illustrates another system **992** that may be used to conduct a sales transaction using the POP device **10**. In this system, either a customer or a merchant may operate the POP device **10**. The system **992** includes a container **994** that may be used to hold the articles **182**. The container may be constructed of plastic, rubber, metal, or other suitable material and may be used to store the articles within the inner volume **924**. The container **994** includes the NFC device **930** that may be used to read the NFC tags **184** located on the articles **182** as the articles **182** are placed within the container **994**. The container **994** also includes an NFC transmission area **996** for establishing a near field communication link with the POP device **10**. The NFC transmission area **996** may identify the location of the NFC device **930** on the container **994**. A user **998** may bring the device **10** within close proximity to the NFC transmission area **996** to establish a near field communication link between the device **10** and the NFC device **930**. In certain embodiments, multiple NFC transmission areas **996** may be identified on the container **992** in close proximity to the NFC device **930**.

[0290] The container **994** also includes a display screen **1000** that may display notifications indicating the status of the sales transaction. For example, the display screen **1000** may be used to a notification indicating that a near field communication link has been established and indicating that the container **992** is transmitting article information to the device **10**. The display screen may be LCD screen, an LED display screen, or other suitable display screen. In certain embodiments, the display screen **1000** may include a touch screen.

[0291] In operation, a customer may place articles **182** to be purchased within the container **994**. As the articles **184** are placed within the inner volume **924**, the NFC device **930** may read the NFC tags **184** located on the articles **182**. The information received from the NFC tags **184** may be used to retrieve or extract article identification information, such as the article's SKU and purchase price. The NFC device **930** may then store the identification information until a connection is established with the POP device **10**.

[0292] FIG. **48** is a simplified block diagram of the container **994** shown in FIG. **47**. The block diagram includes the NFC device **930** and the display **1000**, as well as many other components. The operation of the container **994** may be controlled by control circuitry **1002**, and powered by a power source **1004** that may include one or more batteries. The control circuitry **1002** may include control logic and circuitry, and in certain embodiments, may include one or more microprocessors. The control circuitry **1002** may receive signals from the NFC device **930** and may process the signals for transmission to the POP device **10**. The control circuitry **1002** also may store information received from the NFC device **930** in storage **1006**. The storage **1006** may be a non-volatile storage type such as read-only memory (ROM), flash memory, an optical disk, or other non-volatile computer readable media. The storage **1006** also may include volatile memory such as random access memory (RAM) and/or non-volatile memory such as read-only memory (ROM). The storage may hold the information until the information may be transmitted to the POP device **10**.

[0293] FIG. **49** is a flowchart depicting an exemplary method **1008** for conducting a sales transaction using the system **992** shown in FIG.**47**. The method may begin by receiving (block **1010**) an article. The article may be received when it is placed within the container **994** (FIG.**47**). As the article is placed within the container, the NFC device **930** may read (block **1012**) the NFC tag located on the article. The NFC tag may contain article identification information, such as price information and a serial number. The device **994** may then display information, such as the article's name or price, on the screen **1000** (block **1014**). The device **994** also may add the item to the previously scanned articles that may be stored together as an order (block **1016**). For example, the device **10** may, update the display to show the article within an order summary shown on the display, and the device **994** may update the total purchase price to include the price of the article.

[0294] The device **994** may then store the order and the corresponding information until it senses (block **1018**) the POP device **10**. Upon sensing the_ POP device, the container **994** may transmit (block **1020**) the order to the device **10**. The container **994** may then receive (block **1022**) a deactivation signal. For example, the deactivation signal may be sent from the device **10** after receiving a payment authorization. Upon receiving the deactivation signal, the container **994** may send a signal to deactivate (block **1024**) the NFC tag located on the

article. After deactivation, the device **994** may prompt (block **1026**) the customer to remove the items. For example, the device **994** may display a notification message on the display screen **1000**. The deactivation signal may be used to ensure that a customer has paid for all articles before leaving the store.

[0295] FIG. **50** illustrates another system **1030** that may be used to conduct a sales transaction with the POP device **10**. The system **1030** includes a detachable reader **1032** that may be placed within a container **1034**. The container **1034** may be a customer's personal shopping bag or a bag provided by the merchant. In certain embodiments, the container **1034** may be an environmentally friendly, reusable shopping bag. The detachable reader **1032** may function as an NFC device that may be attached to and removed from the POP device **10**. For example, the detachable reader **1032** may be placed within the container **1034** while a customer is shopping. When detached, the reader **1032** may function in a read mode to read the tags **184** on articles **182** placed within the container **1034**. The detachable reader **1032** may then be brought within close proximity to the POP device **10** to transfer the order information to the POP device. The POP device may then be used to receive payment information and obtain payment authorization as described with respect to FIGS. **9-29**.

[0296] While the invention may be susceptible to various modifications and alternative forms, specific embodiments have been shown by way of example in the drawings and have been described in detail herein. However, it should be understood that the invention is not intended to be limited to the particular forms disclosed. Rather, the invention is to cover all modifications, equivalents, and alternatives falling within the spirit and scope of the invention as defined by the following appended claims.

What is claimed is:

1. A method of conducting a sales transaction, the method comprising:

scanning identification information for an article through a handheld point of purchase device;

displaying a purchase price on the handheld point of purchase device, wherein the purchase price is determined using the identification information;

acquiring payment information for the purchase price through the handheld point of purchase device; and

obtaining an authorization for the payment information to complete a payment for purchasing the article.

2. The method of claim **1**, wherein the scanning identification information comprises reading a near field communication tag corresponding to the article with a near field communication device included in the point of purchase device.

3. The method of claim **1**, wherein the scanning identification information comprises scanning a barcode identifying the article with a scan device included in the point of purchase device.

4. The method of claim **1**, wherein the scanning identification information comprises capturing an image of the article with a camera included in the point of purchase device.

5. The method of claim **1**, comprising enabling a near field communication device of the point of purchase device in response to receiving a user input.

6. The method of claim **1**, wherein the acquiring payment information comprises receiving the payment information through at least one of a near field communication device included in the point of purchase device, a camera included in the point of purchase device, a biometric sensor included in the point of purchase device, or a scanner included in the point of purchase device.

7. The method of claim **1**, wherein the obtaining an authorization comprises:

encrypting the payment information;

selecting a communication interface from a plurality of communication interfaces included in the point of purchase device; and

transmitting the payment information via the selected communication interface to a server to request the authorization.

8. The method of claim **7**, wherein the selecting a communication interface comprises:

detecting connection states for the plurality of communication interfaces; and

comparing the connection states to preferences stored in the device to select the communication interface from the plurality of communication interfaces.

9. The method of claim **1**, comprising displaying the authorization on the point of purchase device.

10. A handheld electronic device, comprising:

a first input configured to scan identification information from an article located near the handheld electronic device;

a second input configured to acquire payment information from a payment object located near the handheld electronic device;

a processor configured to determine a purchase price based on the identification information; and

a communication interface configured to transmit the payment information to a financial institution to obtain authorization for processing a payment for the purchase price.

11. The device of claim **10**, comprising a display configured to display at least one of the identification information or the payment information.

12. The device of claim **10**, wherein the first input comprises at least one of a camera, a scanner, a near field communication device, or a biometric sensor and the second input comprises at least one of a camera, a near field communication device, or a biometric sensor.

13. The device of claim **10**, wherein the identification information comprises a serial number for the article and the payment information comprises a financial account number.

14. The device of claim **10**, wherein the first input and the second input are the same.

15. The device of claim **10**, wherein the payment object comprises a credit card, a check, or a near field communication enabled electronic device.

16. The device of claim **10**, wherein the communication interface comprises at least one of a local area network interface, a personal area network interface, a near field communication interface, or a wide area network interface.

17. A system for conducting a sales transaction, the system comprising:

a handheld electronic device configured to scan article identification information from an article located near the electronic device, to determine an amount due using the identification information, and to acquire payment information for the amount due; and

a server communicatively coupled to the handheld electronic device and configured to process a payment for the amount due using the payment information.

18. The system of claim **17**, wherein the server is configured to record the payment processed by the server and to determine a transaction fee for processing the payment.

19. The system of claim **17**, comprising a plurality of different type communication paths configured to communicatively couple the server to the handheld electronic device; and control logic configured to select a communication path from the plurality of communication paths based on the payment information and on a preference stored in the handheld electronic device.

20. The system of claim **19**, wherein the preference comprises at least on of an encryption level, a data size, or a data transfer rate.

21. The system of claim **19**, wherein the communication path comprises at least one of a local area network, a wide area network, or a personal area network.

22. The system of claim **17**, wherein the server is configured to obtain an authorization for payment from a financial institution and to transmit a notification related to the authorization to the handheld electronic device.

23. The system of claim **22**, wherein the server includes a short message service interface configured to transmit the notification.

24. The system of claim **17**, comprising a database stored on the server, the database containing price information used to determine the amount due.

25. The system of claim **17**, wherein the handheld electronic device includes a near field communication device configured to scan the identification information and to acquire the payment information.

26. A portable electronic device, comprising:

a plurality of communication interfaces for communicating with an external device;

a near field communication device configured to receive data related to a sales transaction;

control logic configured to select a communication interface from the plurality of communication interfaces based on the data and on one or more stored selection preferences; and

a processor configured to transmit the data to the external device using the selected communication interface.

27. The device of claim **26**, wherein the plurality of communication interfaces include at least one of a wireless network interface, a near field communication interface, and a short message service interface.

28. The device of claim **26**, wherein the control logic is configured to detect connection of the communication interface to the external device and to cache the data until connection is detected.

29. The device of claim **26**, comprising a graphical user interface with one or more screens for entering the stored selection preferences.

30. The device of claim **26**, wherein the one or more stored selection preferences comprise one or more connection orders based on at least one of a data transfer rate, a level of security, or the data.

* * * * *