US010513801B2

(12) **United States Patent**
Barnholtz et al.

(10) **Patent No.: US 10,513,801 B2**
(45) **Date of Patent: *Dec. 24, 2019**

(54) **PROCESS FOR MAKING FIBROUS STRUCTURES**

(71) Applicant: **The Procter & Gamble Company**, Cincinnati, OH (US)

(72) Inventors: **Steven Lee Barnholtz**, West Chester, OH (US); **Paul Dennis Trokhan**, Hamilton, OH (US); **Michael Donald Suer**, Cincinnati, OH (US); **Douglas Jay Barkey**, Maineville, OH (US); **Jonathan Paul Brennan**, Cincinnati, OH (US); **Ronald Thomas Gorley**, Cincinnati, OH (US)

(73) Assignee: **The Procter & Gamble Company**, Cincinnati, OH (US)

(*) Notice: Subject to any disclaimer, the term of this patent is extended or adjusted under 35 U.S.C. 154(b) by 81 days.

This patent is subject to a terminal disclaimer.

(21) Appl. No.: **15/891,726**

(22) Filed: **Feb. 8, 2018**

(65) **Prior Publication Data**

US 2018/0163324 A1 Jun. 14, 2018

Related U.S. Application Data

(63) Continuation of application No. 14/475,699, filed on Sep. 3, 2014, now Pat. No. 9,926,648, which is a (Continued)

(51) **Int. Cl.**
D01D 5/098 (2006.01)
B32B 5/02 (2006.01)
(Continued)

(52) **U.S. Cl.**
CPC ***D01D 5/0985*** (2013.01); ***B32B 5/022*** (2013.01); ***D04H 1/425*** (2013.01); ***D04H 1/4291*** (2013.01);
(Continued)

(58) **Field of Classification Search**
CPC B32B 5/022; D01D 5/0985; D04H 1/425; D04H 1/4291; D04H 1/565; D04H 3/16;
(Continued)

(56) **References Cited**

U.S. PATENT DOCUMENTS

2,008,031 A 7/1931 Miller
2,175,045 A 10/1939 Vogel
(Continued)

FOREIGN PATENT DOCUMENTS

DE 199 59 832 A1 7/2001
EP 0 080 382 A1 11/1982
(Continued)

OTHER PUBLICATIONS

Anonymous, "NanoDispense® Contact Angle Measurements", *First Ten Angstroms*, (Oct. 3, 2004). Retrieved from the Internet: URL: http://www.firsttenangstroms.com/pdfdocs/NanoDispenseExamples.pdf, (retrieved Feb. 15, 2011) Entire document.
(Continued)

Primary Examiner — Leo B Tentoni
(74) *Attorney, Agent, or Firm* — C. Brant Cook

(57) **ABSTRACT**

Processes for making fibrous structures and more particularly processes for making fibrous structures comprising filaments are provided.

25 Claims, 12 Drawing Sheets

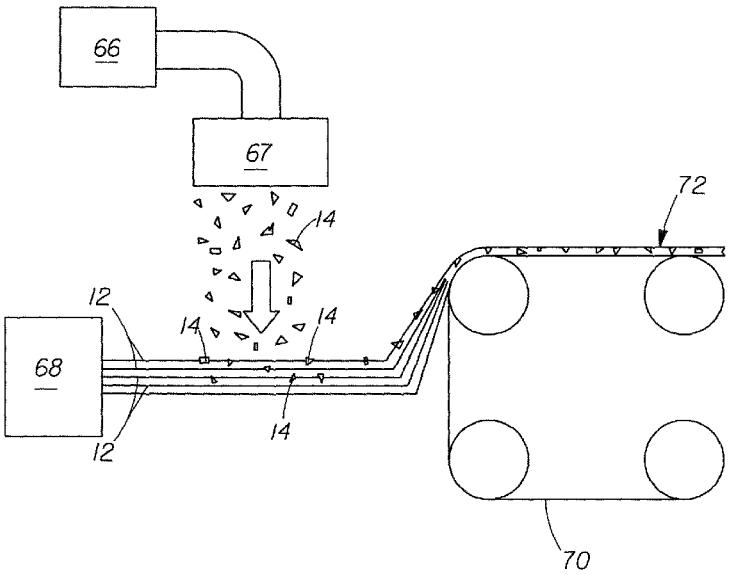

Related U.S. Application Data

continuation of application No. 12/170,575, filed on Jul. 10, 2008, now Pat. No. 8,852,474.

(60) Provisional application No. 60/959,885, filed on Jul. 17, 2007.

(51) **Int. Cl.**

D04H 1/56	(2006.01)
D04H 3/16	(2006.01)
D04H 1/425	(2012.01)
D04H 1/4291	(2012.01)
D04H 5/06	(2006.01)

(52) **U.S. Cl.**
CPC ***D04H 1/56*** (2013.01); ***D04H 1/565*** (2013.01); ***D04H 3/16*** (2013.01); ***D04H 5/06*** (2013.01); *D10B 2401/12* (2013.01); *D10B 2509/026* (2013.01)

(58) **Field of Classification Search**
CPC . D04H 5/06; D10B 2401/12; D10B 2509/026
USPC 264/131, 171.1, 518, 555
See application file for complete search history.

(56) **References Cited**

U.S. PATENT DOCUMENTS

3,521,638	A	7/1970	Parrish
3,838,692	A	10/1974	Levesque
3,954,361	A	5/1976	Page
4,100,324	A	7/1978	Anderson et al.
4,118,531	A	10/1978	Hauser
4,139,699	A	2/1979	Hernandez et al.
4,203,939	A	5/1980	Drachenberg et al.
4,243,480	A	1/1981	Hernandez et al.
4,355,066	A	10/1982	Newman
4,370,289	A	1/1983	Sorenson
4,436,780	A	3/1984	Hotchkiss et al.
4,604,313	A	8/1986	McFarland et al.
4,623,576	A	11/1986	Lloyd et al.
4,634,621	A	1/1987	Manning et al.
4,636,418	A	1/1987	Kennard et al.
4,675,226	A	6/1987	Ott
4,720,415	A	1/1988	Vander Wielen et al.
4,724,114	A	2/1988	McFarland et al.
4,786,550	A	11/1988	McFarland et al.
4,803,117	A	2/1989	Daponte
4,808,467	A	2/1989	Suskind et al.
4,851,168	A	7/1989	Graiver et al.
4,855,179	A	8/1989	Bourland et al.
4,863,779	A	9/1989	Daponte
4,879,170	A	11/1989	Radwanski et al.
4,885,202	A	12/1989	Lloyd et al.
4,906,513	A	3/1990	Kebbell et al.
4,931,201	A	6/1990	Julemont
4,931,355	A	6/1990	Radwanski et al.
4,939,016	A	7/1990	Radwanski et al.
4,970,104	A	11/1990	Radwanski
5,087,506	A	2/1992	Palumbo
5,094,717	A	3/1992	Manning et al.
5,120,642	A	6/1992	Schlossman et al.
5,120,888	A	6/1992	Nohr et al.
5,144,729	A	9/1992	Austin et al.
5,145,727	A	9/1992	Potts et al.
5,149,576	A	9/1992	Potts et al.
5,160,746	A	11/1992	Dodge, II et al.
5,204,165	A	4/1993	Schortmann
5,227,107	A	7/1993	Dickenson et al.
5,254,133	A	10/1993	Seid
5,254,399	A	10/1993	Oku et al.
5,272,236	A	12/1993	Lai et al.
5,284,703	A	2/1994	Everhart et al.
5,350,624	A	9/1994	Georger et al.
5,375,306	A	12/1994	Roussin-Moynier
5,409,768	A	4/1995	Dickenson et al.
5,427,696	A	6/1995	Phan et al.
5,436,066	A	7/1995	Chen
5,476,616	A	12/1995	Schwarz
5,508,102	A	4/1996	Georger et al.
5,509,915	A	4/1996	Hanson et al.
5,536,563	A	7/1996	Shah et al.
5,539,056	A	7/1996	Yang et al.
5,587,225	A	12/1996	Griesbach et al.
5,597,873	A	1/1997	Chambers et al.
5,611,890	A	3/1997	Vinson et al.
5,629,080	A	5/1997	Gupta et al.
5,652,048	A	7/1997	Haynes et al.
5,811,178	A	9/1998	Adam et al.
5,814,570	A	9/1998	Cohen
5,834,385	A	11/1998	Blaney et al.
5,853,867	A	12/1998	Harada et al.
5,948,710	A	9/1999	Pomplun et al.
5,952,251	A	9/1999	Jackson et al.
5,962,112	A	10/1999	Haynes et al.
6,013,349	A	1/2000	Takeuchi et al.
6,028,018	A	2/2000	Amundson et al.
6,103,061	A	8/2000	Anderson et al.
6,110,848	A	8/2000	Bouchette
6,150,005	A	11/2000	Williams et al.
6,162,180	A	12/2000	Miesel et al.
6,172,276	B1	1/2001	Hetzler et al.
6,177,370	B1	1/2001	Skoog et al.
6,179,325	B1	1/2001	King
6,200,120	B1	3/2001	Fish et al.
6,296,936	B1	10/2001	Yahiaoui et al.
6,319,342	B1	11/2001	Riddell
6,348,133	B1	2/2002	Woodrum
6,348,253	B1	2/2002	Daley et al.
6,361,784	B1	3/2002	Brennan et al.
6,383,336	B1	5/2002	Shannon
6,417,120	B1	7/2002	Mitchler et al.
6,423,884	B1	7/2002	Oehmen
6,465,073	B1	10/2002	Morman et al.
6,488,801	B1	12/2002	Bodaghi et al.
6,494,974	B2	12/2002	Riddell
6,503,370	B2	1/2003	Hollmark et al.
6,506,873	B1	1/2003	Ryan et al.
6,550,115	B1	4/2003	Skoog et al.
6,589,892	B1	7/2003	Smith et al.
6,608,236	B1	8/2003	Burns et al.
6,621,679	B1	9/2003	Segervall
6,638,884	B2	10/2003	Quick et al.
6,686,303	B1	2/2004	Haynes et al.
6,709,526	B1	3/2004	Bailey et al.
6,739,023	B2	5/2004	Vonfeldt et al.
6,759,356	B1	7/2004	Myers
6,797,226	B2	9/2004	Annable
6,811,638	B2	11/2004	Close et al.
6,823,568	B1	11/2004	Kobayashi et al.
6,836,937	B1	1/2005	Boscolo
6,926,931	B2	8/2005	Qashou et al.
6,946,413	B2	9/2005	Lange et al.
6,979,386	B1	12/2005	Wallajapet et al.
6,986,932	B2	1/2006	Zink et al.
6,992,028	B2	1/2006	Thomaschefsky et al.
7,029,620	B2	1/2006	Gordon et al.
7,000,000	B1	2/2006	O'Brien
7,028,429	B1	4/2006	Druliner
7,041,369	B1	5/2006	Mackey et al.
7,176,150	B2	2/2007	Kopacz et al.
7,208,429	B2	4/2007	Vinson et al.
7,371,701	B2	5/2008	Inagaki
7,410,683	B2	8/2008	Curro et al.
7,425,517	B2	9/2008	Deka et al.
7,524,379	B2	4/2009	Bailey et al.
7,601,657	B2	10/2009	Zhou et al.
7,681,756	B2	3/2010	Baer et al.
7,696,109	B2	4/2010	Ouellette et al.
7,879,172	B2	2/2011	Kopcz et al.
7,902,096	B2	3/2011	Brandner et al.
7,972,986	B2	7/2011	Barnholtz et al.
7,976,679	B2	7/2011	Vinson et al.
7,994,079	B2	8/2011	Chen et al.

(56) **References Cited**

U.S. PATENT DOCUMENTS

7,994,081	B2	8/2011	Farrell et al.
7,998,889	B2	8/2011	Stralin et al.
8,017,534	B2	9/2011	Harvey et al.
2003/0024662	A1	2/2003	Besemer et al.
2003/0060113	A1	3/2003	Christie et al.
2003/0073367	A1	4/2003	Kopacz et al.
2003/0131457	A1	7/2003	Krautkramer et al.
2003/0135172	A1	7/2003	Whitmore et al.
2003/0150090	A1	8/2003	Krautkramer et al.
2003/0200991	A1	10/2003	Keck et al.
2003/0211862	A1	11/2003	Keck et al.
2003/0220039	A1	11/2003	Chen et al.
2003/0224686	A1	12/2003	Andersen
2004/0048542	A1	3/2004	Thomaschefsy et al.
2004/0065422	A1	4/2004	Hu et al.
2004/0087237	A1	5/2004	Garnier et al.
2004/0096656	A1	5/2004	Bond
2004/0106723	A1	6/2004	Yang et al.
2004/0163781	A1	8/2004	Hernandez-Munoa et al.
2004/0181199	A1	9/2004	Moberg-Alehammar et al.
2005/0020170	A1	1/2005	Deka et al.
2005/0056956	A1	3/2005	Zhao et al.
2005/0090175	A1	4/2005	Bergholm et al.
2005/0103455	A1	5/2005	Edwards et al.
2005/0112980	A1	5/2005	Strandquist et al.
2005/0130536	A1	6/2005	Siebers et al.
2005/0130544	A1	6/2005	Cheng et al.
2005/0133177	A1	6/2005	Stralin et al.
2005/0136765	A1	6/2005	Shannon
2005/0136772	A1	6/2005	Chen et al.
2005/0136778	A1	6/2005	Thomaschefsky et al.
2005/0137540	A1	6/2005	Villanueva et al.
2005/0148262	A1	7/2005	Varona et al.
2005/0148264	A1	7/2005	Varona et al.
2005/0159065	A1	7/2005	Stralin et al.
2005/0170727	A1	8/2005	Mekik et al.
2005/0177122	A1	8/2005	Berba et al.
2005/0245159	A1	11/2005	Chmielewski et al.
2005/0247416	A1	11/2005	Forry et al.
2005/0274470	A1	12/2005	Shannon et al.
2006/0086633	A1	4/2006	Kleinsmith
2006/0088697	A1	4/2006	Manifold et al.
2006/0134384	A1	6/2006	Vinson et al.
2007/0010153	A1	1/2007	Shaffer et al.
2007/0039704	A1	2/2007	Cabell et al.
2007/0049153	A1	3/2007	Dunbar et al.
2007/0063091	A1	3/2007	Neveu
2007/0077841	A1	4/2007	Zoch et al.
2007/0173162	A1	7/2007	Ethiopia et al.
2007/0202766	A1	8/2007	Ouellette et al.
2007/0232180	A1	10/2007	Polat et al.
2007/0272381	A1	11/2007	Elony et al.
2008/0000602	A1	1/2008	Dyer et al.
2008/0008853	A1	1/2008	Hupp et al.
2008/0041543	A1	2/2008	Dyer et al.
2008/0050996	A1	2/2008	Stralin et al.
2008/0051471	A1	2/2008	Kronberg et al.
2008/0142178	A1	6/2008	Haubrich et al.
2008/0241538	A1	10/2008	Lee et al.
2008/0248239	A1	10/2008	Pomeroy et al.
2009/0022960	A1	1/2009	Suer et al.
2009/0022983	A1	1/2009	Cabell et al.
2009/0023839	A1	1/2009	Barnholtz et al.
2009/0084513	A1	4/2009	Barnholtz et al.
2009/0093585	A1	4/2009	Smith et al.
2009/0151748	A1	6/2009	Ridenhour
2009/0220741	A1	9/2009	Manifold et al.
2009/0220769	A1	9/2009	Manifold et al.
2010/0048082	A1	2/2010	Topolkaraev et al.
2010/0239825	A1	9/2010	Sheehan et al.
2010/0326612	A1	12/2010	Hupp et al.
2011/0039054	A1	2/2011	Cabell et al.
2011/0045261	A1	2/2011	Sellars
2011/0100574	A1	5/2011	Barnholtz et al.
2011/0104419	A1	5/2011	Barnholtz et al.
2011/0104444	A1	5/2011	Barnholtz et al.
2011/0104493	A1	5/2011	Barnholtz et al.
2011/0104970	A1	5/2011	Barnholtz et al.
2011/0209840	A1	9/2011	Barnholtz et al.
2011/0220310	A1	9/2011	Polat et al.
2011/0244199	A1	10/2011	Brennan et al.
2012/0318693	A1	12/2012	Barnholtz et al.

FOREIGN PATENT DOCUMENTS

EP	0 156 649	A2	10/1985
EP	1 156 160	A2	10/1985
EP	0 294 137	A1	12/1988
EP	0 333 209	B1	9/1989
EP	0 341 977	A2	11/1989
EP	0 205 242	B2	12/1991
EP	1 156 147	A1	11/2001
EP	1 887 036	A2	2/2008
GB	2113731		8/1983
JP	59-211667	A	11/1984
JP	08-174735	A	7/1996
JP	2000/303335	A2	10/2000
JP	2002/088660	A	3/2002
JP	2004-141255	A	5/2004
JP	2005/218525	A2	8/2005
WO	WO 94/19179	A1	9/1994
WO	WO 98/55295	A1	12/1998
WO	WO 00/11998	A1	3/2000
WO	WO 00/29655	A1	5/2000
WO	WO 00/63486	A1	10/2000
WO	WO 01/09023	A1	2/2001
WO	WO 01/66345	A1	9/2001
WO	WO 03/050347	A1	6/2003
WO	WO 03/080905	A1	10/2003
WO	WO 2005/073446	A1	8/2005
WO	WO 2005/080497	A1	9/2005
WO	WO 2005/106085	A1	11/2005
WO	WO 2005/118934	A1	12/2005
WO	WO 2006/027810	A1	3/2006
WO	WO 2007/070064	A1	6/2007
WO	WO 2007/070075	A1	6/2007
WO	WO 2007/078344	A1	7/2007
WO	WO 2007/098449	A1	8/2007
WO	WO 2007/100936	A2	9/2007
WO	WO 2007/124866	A1	11/2007
WO	WO 2007/135624	A2	11/2007
WO	WO 2008/005500	A2	1/2008
WO	WO 2008/050311	A2	5/2008
WO	WO 2009/010940	A2	1/2009
WO	WO 2009/010941	A2	1/2009
WO	WO 2009/010942	A2	1/2009

OTHER PUBLICATIONS

Complete Textile Glossary, Celaneses Acetate (2001), definition of "filament".

Meyer, et al., "Comparison between different presentations of pore size distribution in porous materials." Fresenius J. Anal Chem. 1999. 363: pp. 174-178.

All Office Actions in U.S. Appl. Nos. 13/106,302, 12/170,578, 12/170,575 14/475,699, 15/891,726,12/170,557, 12/917,535, 12/917,547, 12/917,558, 12/917,574, 12/917,585, and 13/076,492.

U.S. Appl. No. 12/170,585, filed Jul. 10, 2008, Barnholtz, et al.

U.S. Appl. No. 12/170,578, filed Jul. 10, 2008, Barnholtz, et al.

U.S. Appl. No. 12/170,575, filed Jul. 10, 2008, Barnholtz, et al.

U.S. Appl. No. 12/170,565, filed Jul. 10, 2008, Suer, et al.

U.S. Appl. No. 12/170,557, filed Jul. 10, 2008, Cabell, et al.

U.S. Appl. No. 12/917,535, filed Nov. 2, 2010, Barnholtz, et al.

U.S. Appl. No. 12/917,547, filed Nov. 2, 2010, Barnholtz, et al.

U.S. Appl. No. 12/917,558, filed Nov. 2, 2010, Barnholtz, et al.

U.S. Appl. No. 12/917,574, filed Nov. 2, 2010, Barnholtz, et al.

U.S. Appl. No. 12/917,585, filed Nov. 2, 2010, Barnholtz, et al.

U.S. Appl. No. 13/076,492, filed Mar. 31, 2011, Jonathan Paul Brennan, et al.

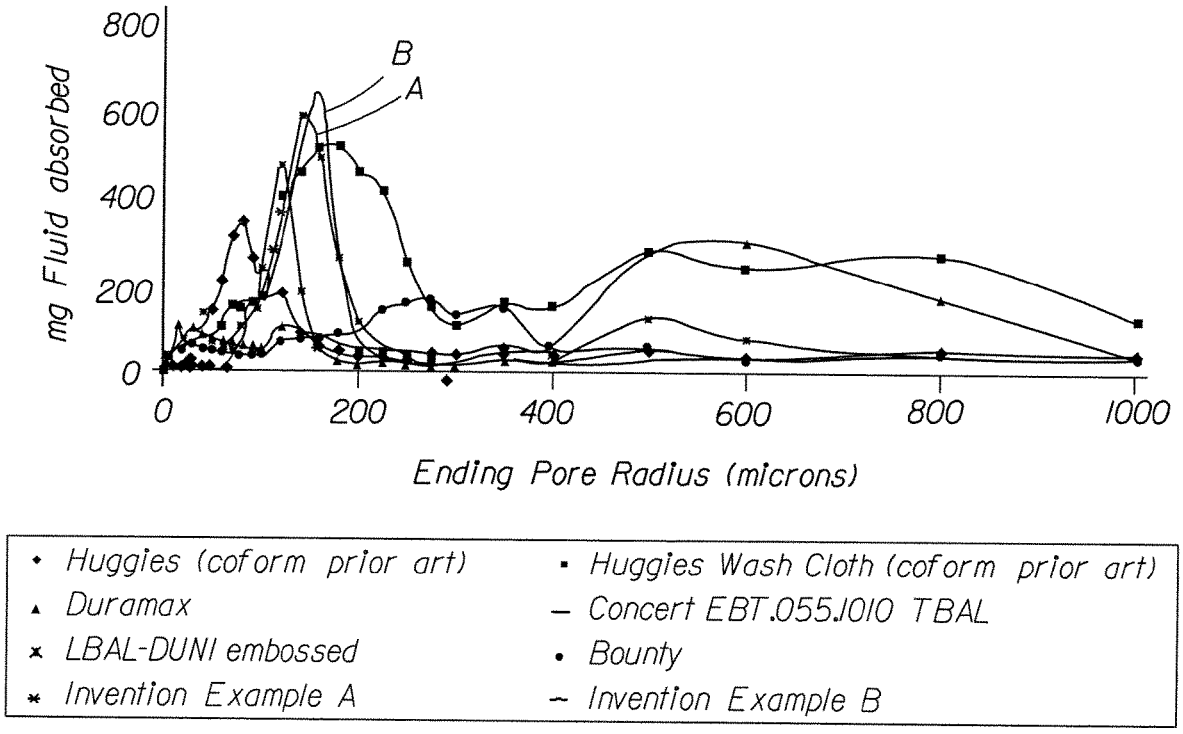
800
600
400
200
0
mg Fluid absorbed
B
A
0
200
400
600
800
1000
Ending Pore Radius (microns)
Huggies (coform prior art)
Huggies Wash Cloth (coform prior art)
Duramax
Concert EBT.055.1010 TBAL
LBAL-DUNI embossed
Bounty
Invention Example A
Invention Example B

Fig. 1

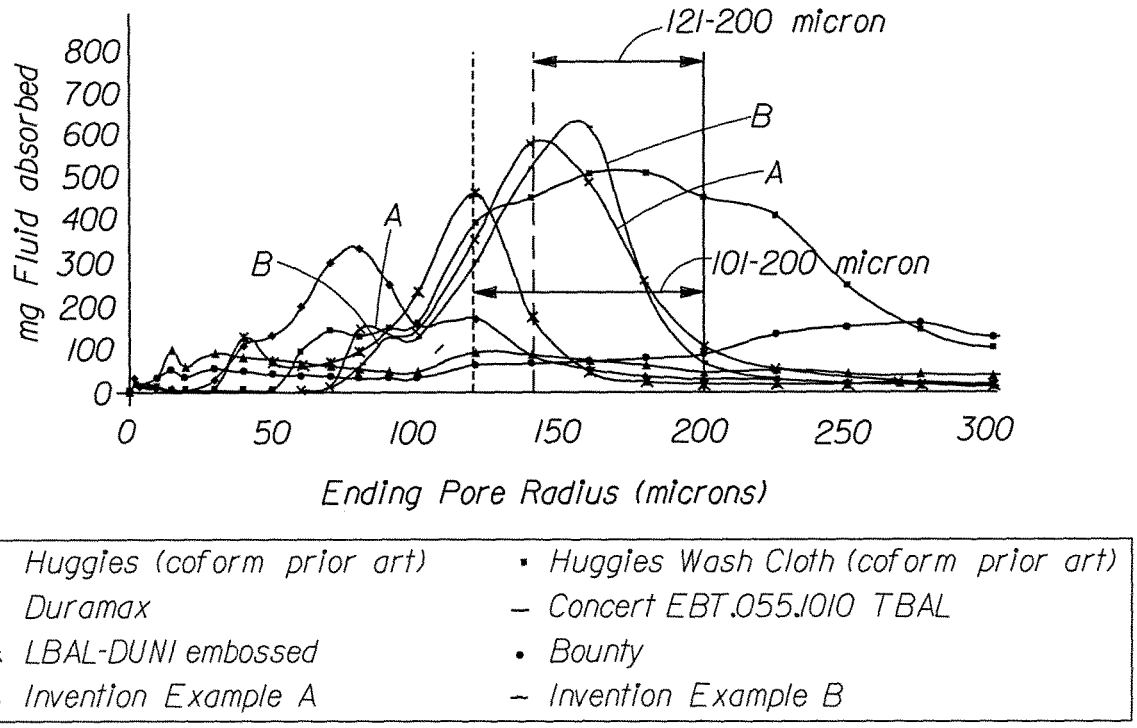
121-200 micron
101-200 micron
A
B
mg Fluid absorbed
800
700
600
500
400
300
200
100
0
0
50
100
150
200
250
300
Ending Pore Radius (microns)
Huggies (coform prior art)
Huggies Wash Cloth (coform prior art)
Duramax
Concert EBT.055.1010 TBAL
LBAL-DUNI embossed
Bounty
Invention Example A
Invention Example B

Fig. 2

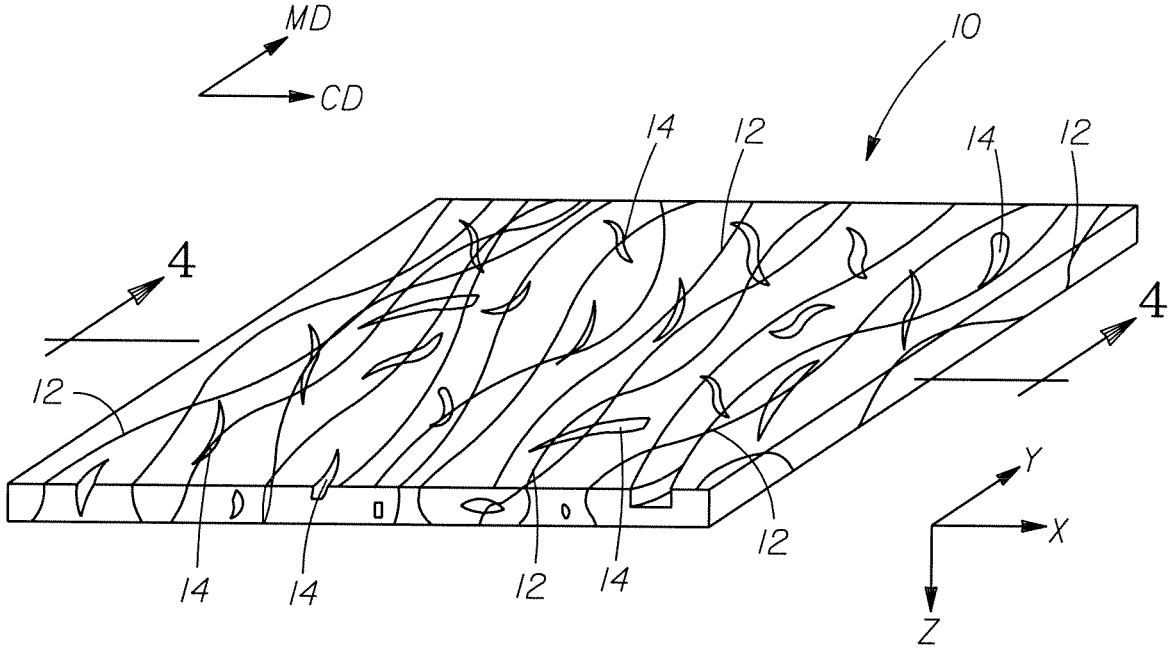
MD
CD
10
14
12
14
12
4
4
12
14
14
12
14
12
Y
X
Z

Fig. 3

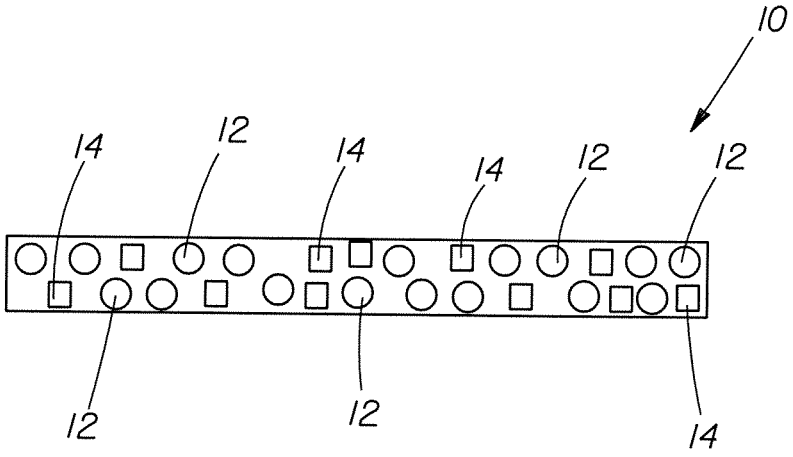
10
14
12
14
14
12
12
12
12
14

Fig. 4

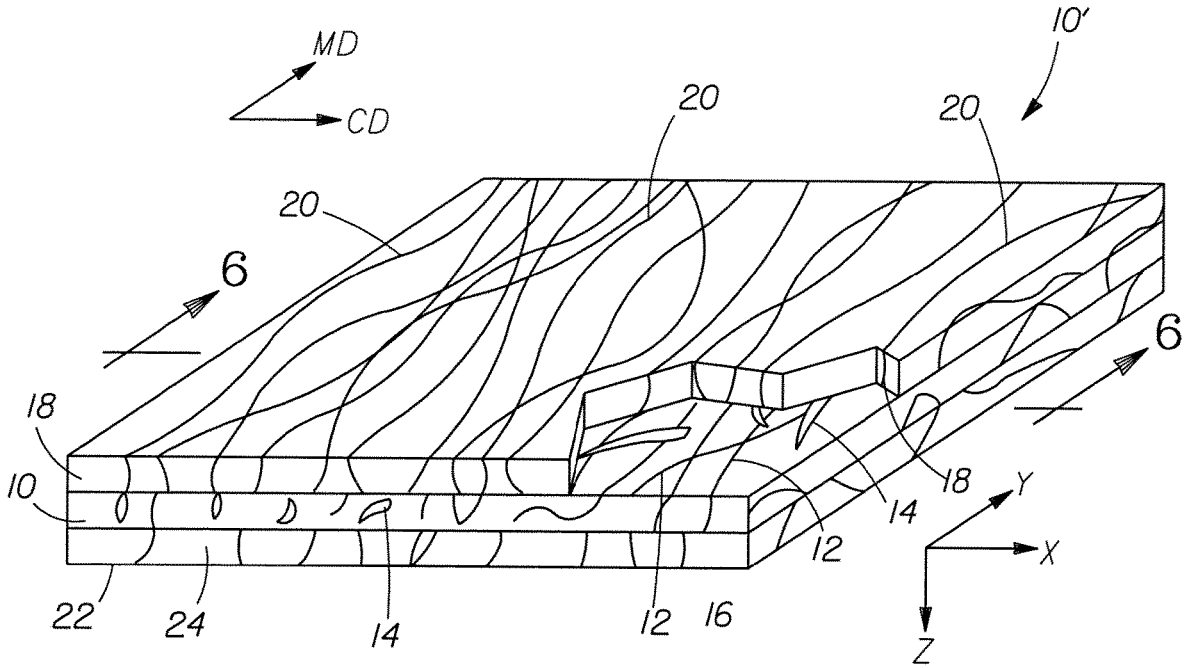

Fig. 5

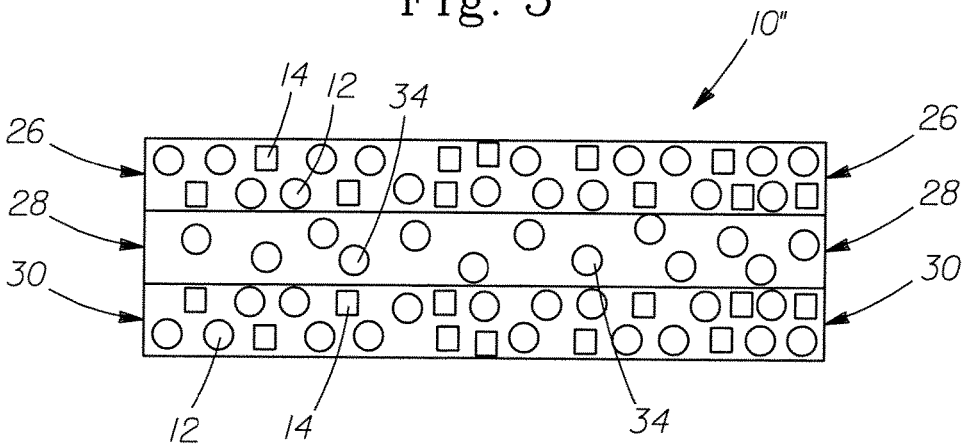

Fig. 6

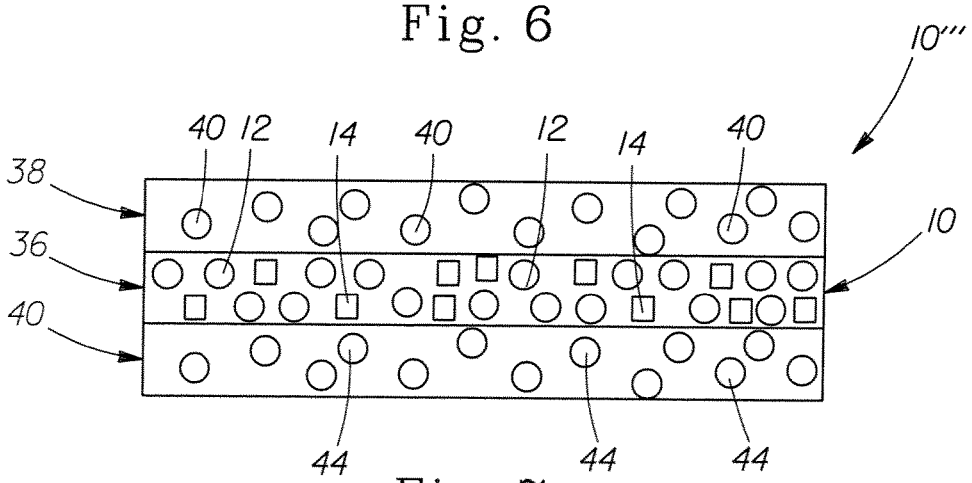

Fig. 7

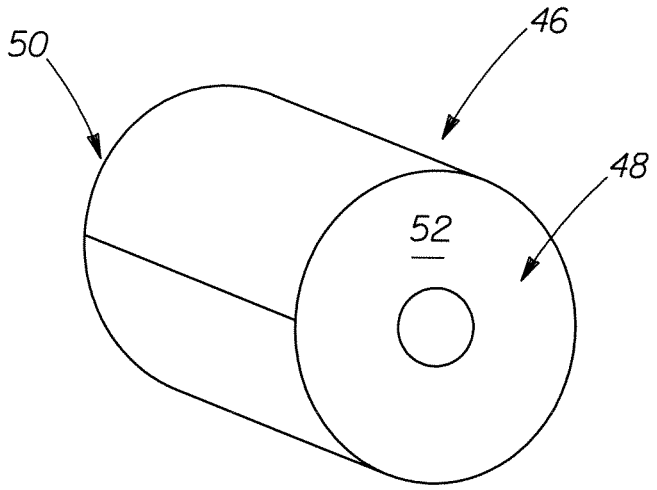

Fig. 8

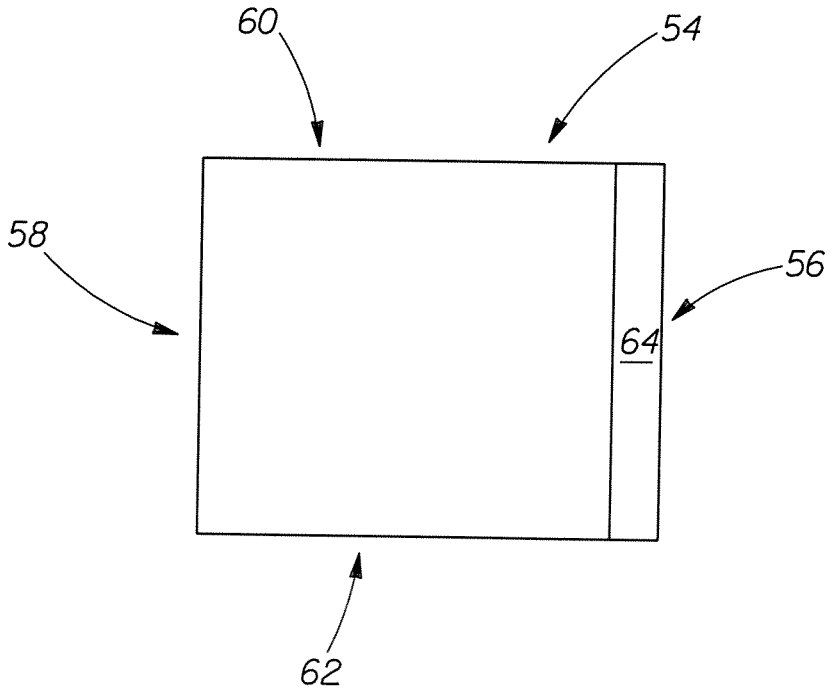

Fig. 9

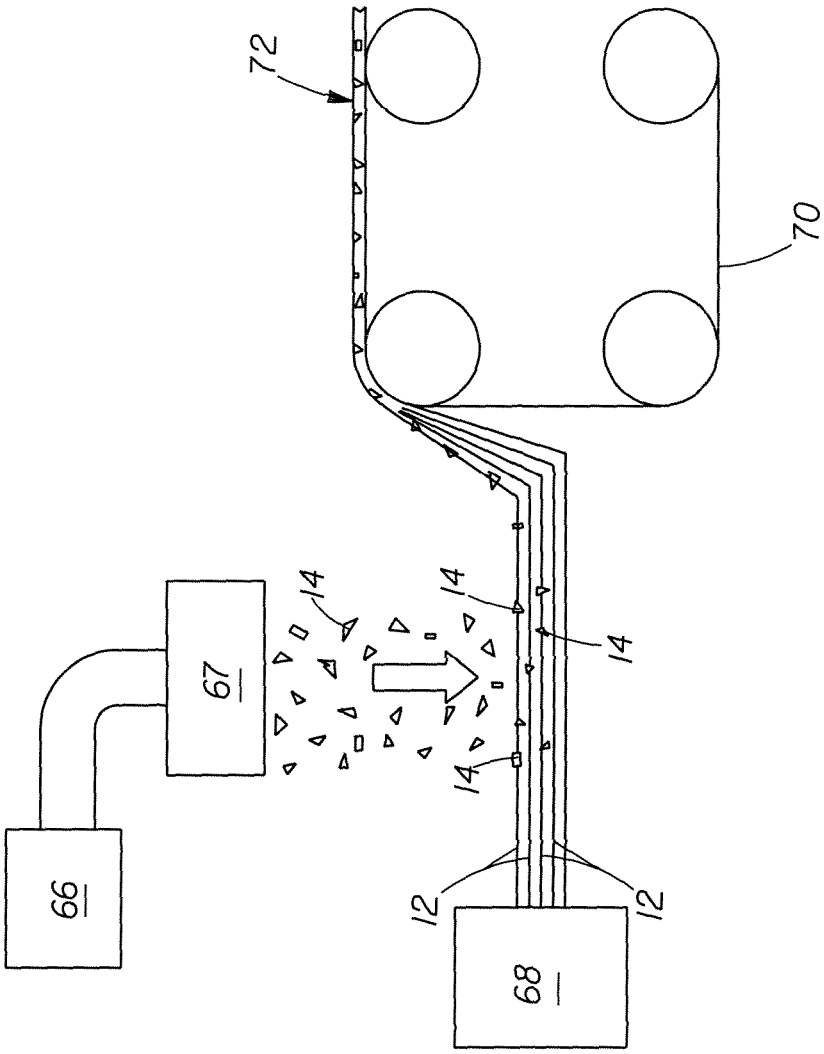

Fig. 10

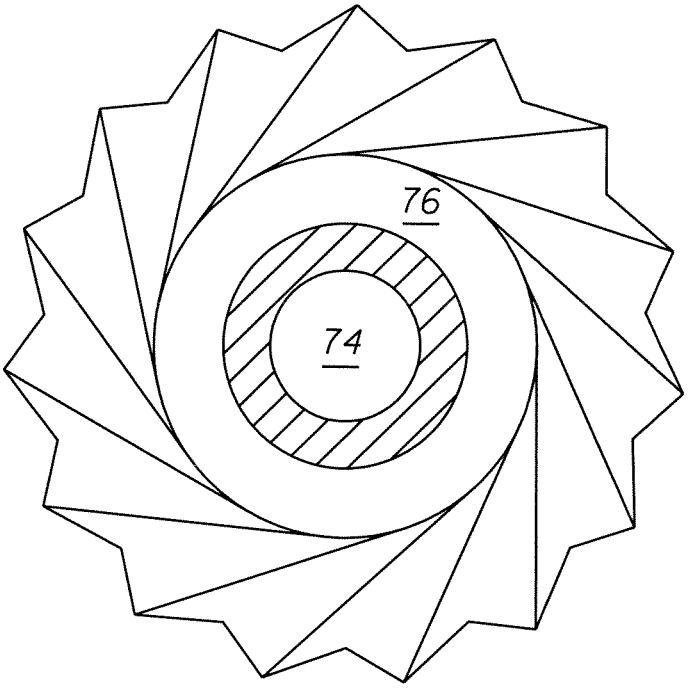

Fig. 11

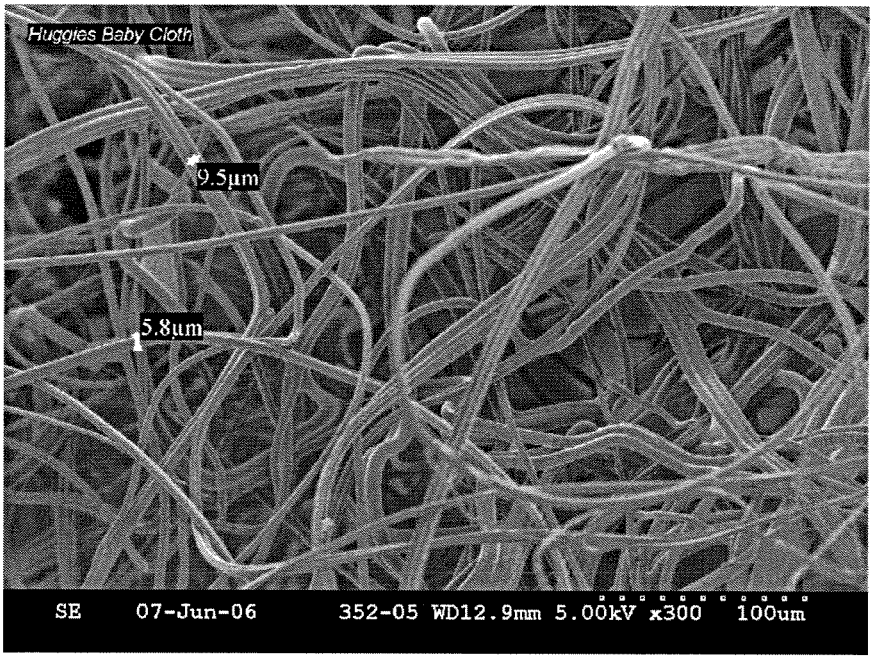
Huggies Baby Cloth
9.5µm
5.8µm
SE 07-Jun-06 352-05 WD12.9mm 5.00kV x300 100um

Fig. 12

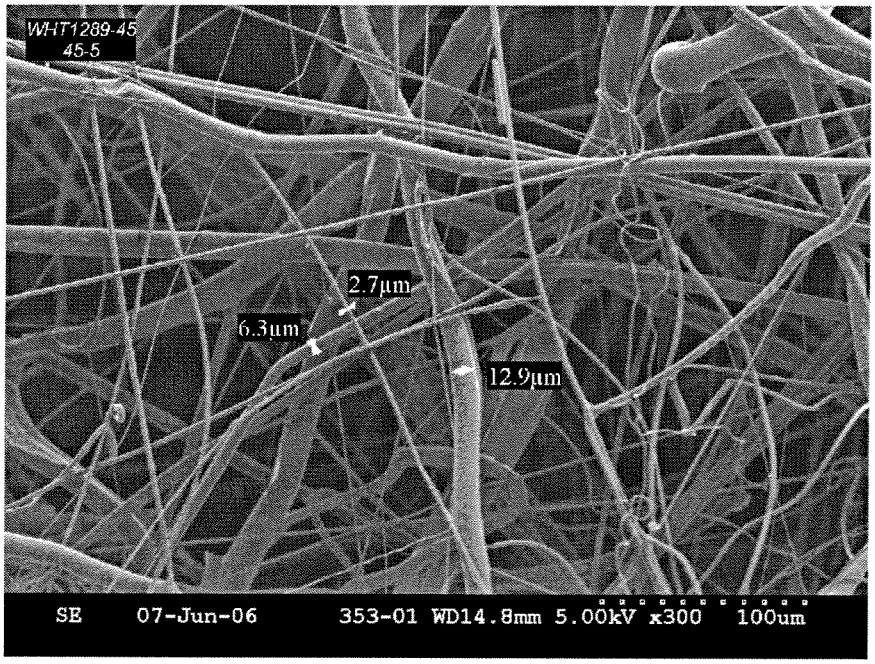
WHT1289-45
45-5
2.7µm
6.3µm
12.9µm
SE 07-Jun-06 353-01 WD14.8mm 5.00kV x300 100um

Fig. 13

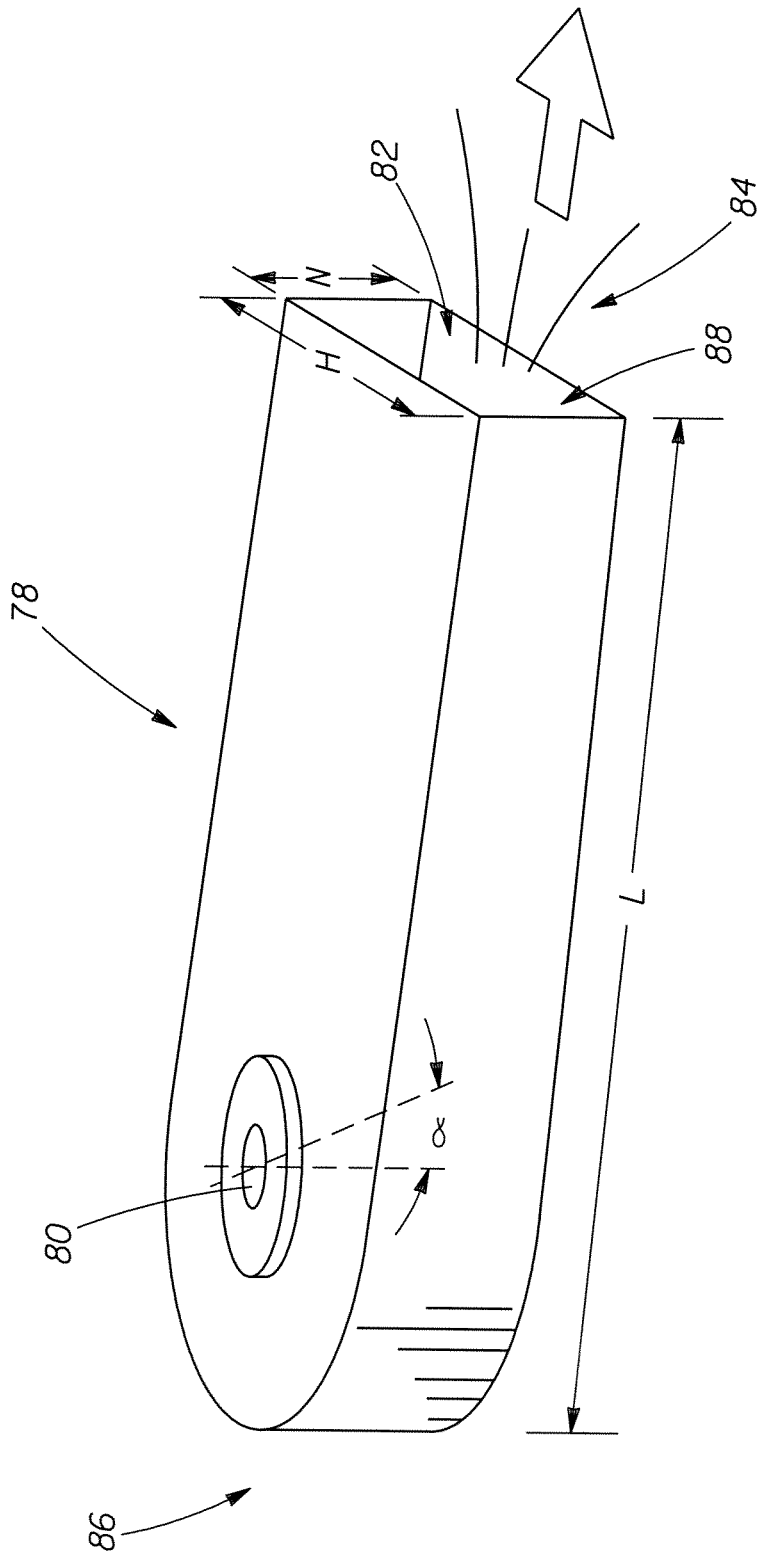

Fig. 14

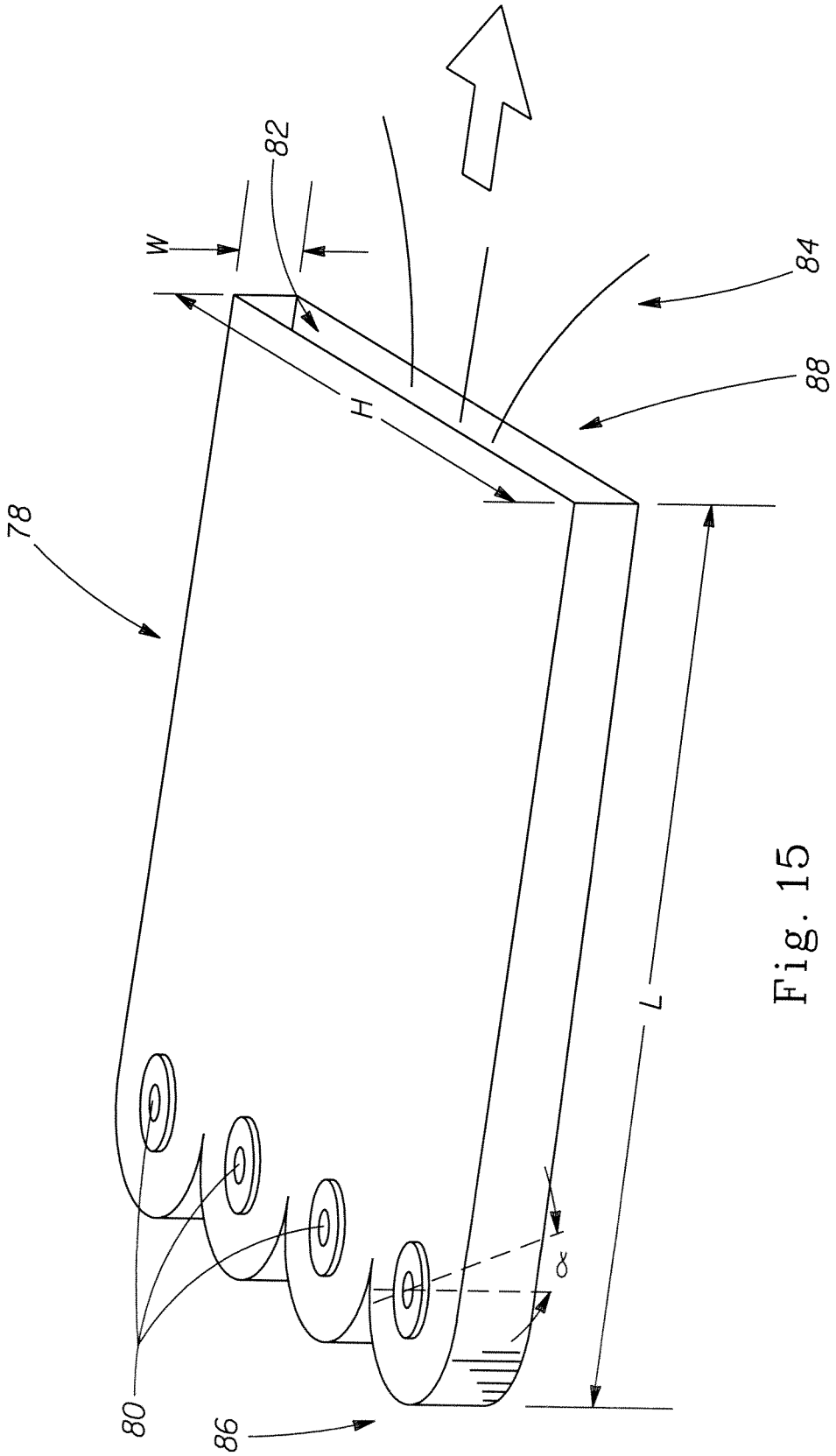

Fig. 15

Fig. 16A

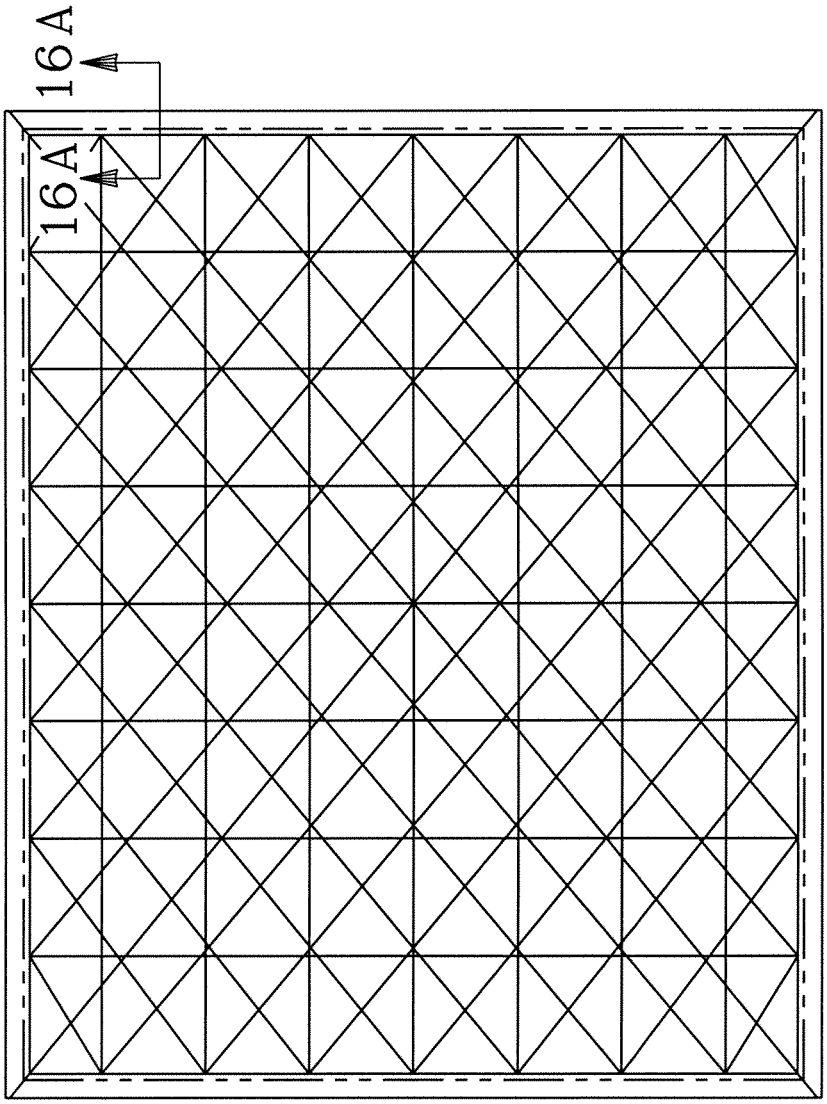

Fig. 16

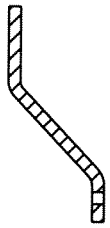

Fig. 17A

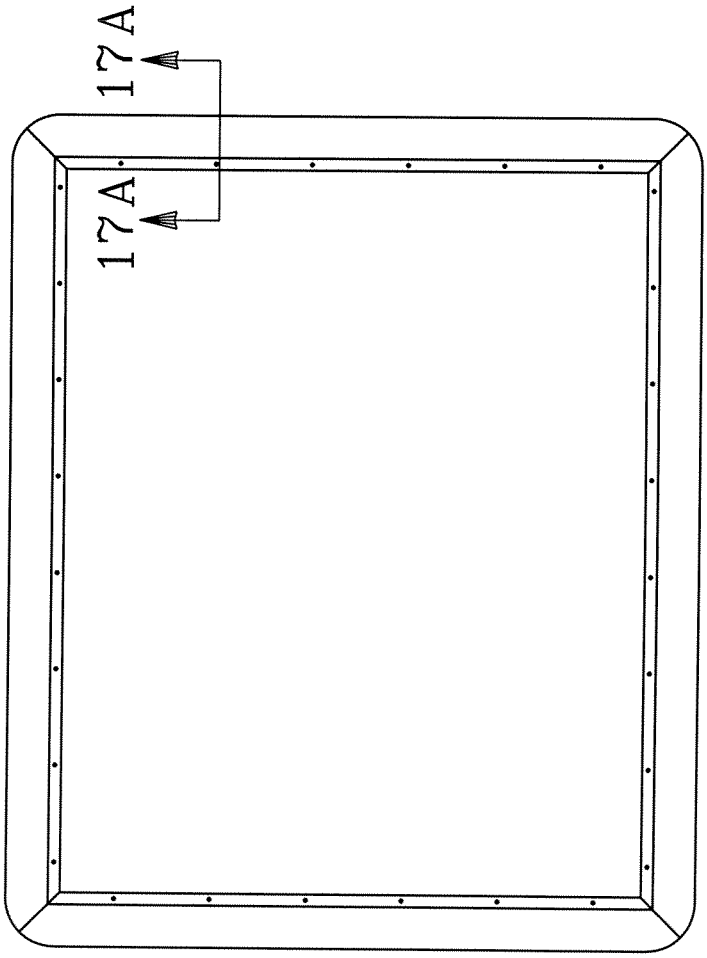

Fig. 17

PROCESS FOR MAKING FIBROUS STRUCTURES

FIELD OF THE INVENTION

The present invention relates to processes for making fibrous structures and more particularly to processes for making fibrous structures comprising filaments.

BACKGROUND OF THE INVENTION

Processes for making fibrous structures comprising filaments are known in the art. An example of such a known process is a co-form process.

Known co-form processes utilize a knife-edge die that comprises filament-forming holes. The filaments produced by the filament-forming holes are contacted after exiting by air. The air contacts the filaments at an angle of 30° to less than 90°, not parallel to or substantially parallel to the filament produced from the filament-forming holes.

The problem with current processes for making fibrous structures, especially processes that utilize knife-edge dies, is that the fibrous structures comprise filaments having a distribution of average filament diameters that does not optimize the properties, for example absorbency properties (such as absorption capacity and/or rate of absorption) of the fibrous structures.

Accordingly, there is a need for a process for making fibrous structures, especially fibrous structure that comprise filaments, that provide improved properties compared to fibrous structures produced by known processes for making fibrous structures, especially processes that utilize knife-edge dies.

SUMMARY OF THE INVENTION

The present invention solves the problem identified above by providing a process for making fibrous structures, especially fibrous structure that comprise filaments, that exhibit improved properties compared to fibrous structure produced by known processes for making fibrous structures, especially processes that utilize knife-edge dies.

In one example of the present invention, a process for making a fibrous structure, the process comprising the steps of:

a. providing a die comprising one or more filament-forming holes, wherein one or more fluid-releasing holes are associated with one filament-forming hole such that a fluid exiting the fluid-releasing hole is parallel or substantially parallel to an exterior surface of a filament exiting the filament-forming hole;

b. supplying at least a first polymer to the die;

c. producing a plurality of filaments comprising the first polymer from the die;

d. combining the filaments with solid additives to form a mixture; and

e. collecting the mixture on a collection device to produce a fibrous structure;

is provided.

In another example of the present invention, a process for making a fibrous structure, the process comprising the steps of:

a. providing a die comprising one or more filament-forming holes, wherein one or more fluid-releasing holes are associated with one filament-forming hole such that a fluid exiting the fluid-releasing hole is parallel or substantially parallel to an exterior surface of a filament exiting the filament-forming hole;

b. supplying a polyolefin polymer to the die;

c. producing a plurality of filaments comprising the polyolefin polymer from the die;

d. combining the filaments with wood pulp fibers to form a mixture; and

e. collecting the mixture on a collection device to produce a fibrous structure;

is provided.

In yet another example of the present invention, a fibrous structure made by a process according to the present invention is provided.

Accordingly, the present invention provides a process for making fibrous structures, especially fibrous structure that comprise filaments, that exhibit improved properties compared to fibrous structure produced by known processes for making fibrous structures, especially processes that utilize knife-edge dies.

BRIEF DESCRIPTION OF THE DRAWINGS

FIG. **1** is a Pore Volume Distribution graph of various fibrous structures, including a fibrous structure according to the present invention, showing the Ending Pore Radius of from 1 μm to 1000 μm and the Capacity of Water in Pores;

FIG. **2** is a Pore Volume Distribution graph of various fibrous structures, including a fibrous structure according to the present invention, showing the Ending Pore Radius of from 1 μm to 300 μm and the Capacity of Water in Pores;

FIG. **3** is a schematic representation of an example of a fibrous structure according to the present invention;

FIG. **4** is a schematic, cross-sectional representation of FIG. **3** taken along line **4-4**;

FIG. **5** is a schematic representation of another example of a fibrous structure according to the present invention;

FIG. **6** is a schematic, cross-sectional representation of another example of a fibrous structure according to the present invention;

FIG. **7** is a schematic, cross-sectional representation of another example of a fibrous structure according to the present invention;

FIG. **8** is a schematic representation of another example of a fibrous structure in roll form according to the present invention;

FIG. **9** is a schematic representation of another example of a fibrous structure;

FIG. **10** is a schematic representation of an example of a process for making a fibrous structure according to the present invention;

FIG. **11** is a schematic representation of an example of a filament-forming hole and fluid-releasing hole from a suitable die useful in making a fibrous structure according to the present invention;

FIG. **12** is a scanning electromicrograph of a fibrous structure made by a known die;

FIG. **13** is a scanning electromicrograph of a fibrous structure made by a die according to the present invention;

FIG. **14** is a schematic representation of an example of a solid additive spreader useful in the processes of the present invention;

FIG. **15** is a schematic representation of another example of a solid additive spreader useful in the processes of the present invention;

FIG. **16** is a diagram of a support rack utilized in the HFS and VFS Test Methods described herein;

FIG. **17** is a diagram of a support rack cover utilized in the HFS and VFS Test Methods described herein.

DETAILED DESCRIPTION OF THE INVENTION

Definitions

"Fibrous structure" as used herein means a structure that comprises one or more filaments and/or fibers. In one example, a fibrous structure according to the present invention means an orderly arrangement of filaments and/or fibers within a structure in order to perform a function. Nonlimiting examples of fibrous structures of the present invention include paper, fabrics (including woven, knitted, and nonwoven), and absorbent pads (for example for diapers or feminine hygiene products).

Nonlimiting examples of processes for making fibrous structures include known wet-laid papermaking processes and air-laid papermaking processes. Such processes typically include steps of preparing a fiber composition in the form of a suspension in a medium, either wet, more specifically aqueous medium, or dry, more specifically gaseous, i.e. with air as medium. The aqueous medium used for wet-laid processes is oftentimes referred to as a fiber slurry. The fibrous slurry is then used to deposit a plurality of fibers onto a forming wire or belt such that an embryonic fibrous structure is formed, after which drying and/or bonding the fibers together results in a fibrous structure. Further processing the fibrous structure may be carried out such that a finished fibrous structure is formed. For example, in typical papermaking processes, the finished fibrous structure is the fibrous structure that is wound on the reel at the end of papermaking, and may subsequently be converted into a finished product, e.g. a sanitary tissue product.

The fibrous structures of the present invention may be homogeneous or may be layered. If layered, the fibrous structures may comprise at least two and/or at least three and/or at least four and/or at least five layers.

The fibrous structures of the present invention may be co-formed fibrous structures.

"Co-formed fibrous structure" as used herein means that the fibrous structure comprises a mixture of at least two different materials wherein at least one of the materials comprises a filament, such as a polypropylene filament, and at least one other material, different from the first material, comprises a solid additive, such as a fiber and/or a particulate. In one example, a co-formed fibrous structure comprises solid additives, such as fibers, such as wood pulp fibers, and filaments, such as polypropylene filaments.

"Solid additive" as used herein means a fiber and/or a particulate.

"Particulate" as used herein means a granular substance or powder.

"Fiber" and/or "Filament" as used herein means an elongate particulate having an apparent length greatly exceeding its apparent width, i.e. a length to diameter ratio of at least about 10. For purposes of the present invention, a "fiber" is an elongate particulate as described above that exhibits a length of less than 5.08 cm (2 in.) and a "filament" is an elongate particulate as described above that exhibits a length of greater than or equal to 5.08 cm (2 in.).

Fibers are typically considered discontinuous in nature. Nonlimiting examples of fibers include wood pulp fibers and synthetic staple fibers such as polyester fibers.

Filaments are typically considered continuous or substantially continuous in nature. Filaments are relatively longer than fibers. Nonlimiting examples of filaments include meltblown and/or spunbond filaments. Nonlimiting examples of materials that can be spun into filaments include natural polymers, such as starch, starch derivatives, cellulose and cellulose derivatives, hemicellulose, hemicellulose derivatives, and synthetic polymers including, but not limited to polyvinyl alcohol filaments and/or polyvinyl alcohol derivative filaments, and thermoplastic polymer filaments, such as polyesters, nylons, polyolefins such as polypropylene filaments, polyethylene filaments, and biodegradable or compostable thermoplastic fibers such as polylactic acid filaments, polyhydroxyalkanoate filaments and polycaprolactone filaments. The filaments may be monocomponent or multicomponent, such as bicomponent filaments.

In one example of the present invention, "fiber" refers to papermaking fibers. Papermaking fibers useful in the present invention include cellulosic fibers commonly known as wood pulp fibers. Applicable wood pulps include chemical pulps, such as Kraft, sulfite, and sulfate pulps, as well as mechanical pulps including, for example, groundwood, thermomechanical pulp and chemically modified thermomechanical pulp. Chemical pulps, however, may be preferred since they impart a superior tactile sense of softness to tissue sheets made therefrom. Pulps derived from both deciduous trees (hereinafter, also referred to as "hardwood") and coniferous trees (hereinafter, also referred to as "softwood") may be utilized. The hardwood and softwood fibers can be blended, or alternatively, can be deposited in layers to provide a stratified web. U.S. Pat. No. 4,300,981 and U.S. Pat. No. 3,994,771 are incorporated herein by reference for the purpose of disclosing layering of hardwood and softwood fibers. Also applicable to the present invention are fibers derived from recycled paper, which may contain any or all of the above categories as well as other non-fibrous materials such as fillers and adhesives used to facilitate the original papermaking.

In addition to the various wood pulp fibers, other cellulosic fibers such as cotton linters, rayon, lyocell and bagasse can be used in this invention. Other sources of cellulose in the form of fibers or capable of being spun into fibers include grasses and grain sources.

"Sanitary tissue product" as used herein means a soft, low density (i.e. <about 0.15 g/cm3) web useful as a wiping implement for post-urinary and post-bowel movement cleaning (toilet tissue), for otorhinolaryngological discharges (facial tissue), and multi-functional absorbent and cleaning uses (absorbent towels). The sanitary tissue product may be convolutedly wound upon itself about a core or without a core to form a sanitary tissue product roll.

In one example, the sanitary tissue product of the present invention comprises a fibrous structure according to the present invention.

The sanitary tissue products of the present invention may exhibit a basis weight between about 10 g/m^2 to about 120 g/m^2 and/or from about 15 g/m^2 to about 110 g/m^2 and/or from about 20 g/m^2 to about 100 g/m^2 and/or from about 30 to 90 g/m^2. In addition, the sanitary tissue product of the present invention may exhibit a basis weight between about 40 g/m^2 to about 120 g/m^2 and/or from about 50 g/m^2 to about 110 g/m^2 and/or from about 55 g/m^2 to about 105 g/m^2 and/or from about 60 to 100 g/m^2.

The sanitary tissue products of the present invention may exhibit a total dry tensile strength of greater than about 59 g/cm (150 g/in) and/or from about 78 g/cm (200 g/in) to about 394 g/cm (1000 g/in) and/or from about 98 g/cm (250 g/in) to about 335 g/cm (850 g/in). In addition, the sanitary tissue product of the present invention may exhibit a total

dry tensile strength of greater than about 196 g/cm (500 g/in) and/or from about 196 g/cm (500 g/in) to about 394 g/cm (1000 g/in) and/or from about 216 g/cm (550 g/in) to about 335 g/cm (850 g/in) and/or from about 236 g/cm (600 g/in) to about 315 g/cm (800 g/in). In one example, the sanitary tissue product exhibits a total dry tensile strength of less than about 394 g/cm (1000 g/in) and/or less than about 335 g/cm (850 g/in).

In another example, the sanitary tissue products of the present invention may exhibit a total dry tensile strength of greater than about 196 g/cm (500 g/in) and/or greater than about 236 g/cm (600 g/in) and/or greater than about 276 g/cm (700 g/in) and/or greater than about 315 g/cm (800 g/in) and/or greater than about 354 g/cm (900 g/in) and/or greater than about 394 g/cm (1000 g/in) and/or from about 315 g/cm (800 g/in) to about 1968 g/cm (5000 g/in) and/or from about 354 g/cm (900 g/in) to about 1181 g/cm (3000 g/in) and/or from about 354 g/cm (900 g/in) to about 984 g/cm (2500 g/in) and/or from about 394 g/cm (1000 g/in) to about 787 g/cm (2000 g/in).

The sanitary tissue products of the present invention may exhibit an initial total wet tensile strength of less than about 78 g/cm (200 g/in) and/or less than about 59 g/cm (150 g/in) and/or less than about 39 g/cm (100 g/in) and/or less than about 29 g/cm (75 g/in).

The sanitary tissue products of the present invention may exhibit an initial total wet tensile strength of greater than about 118 g/cm (300 g/in) and/or greater than about 157 g/cm (400 g/in) and/or greater than about 196 g/cm (500 g/in) and/or greater than about 236 g/cm (600 g/in) and/or greater than about 276 g/cm (700 g/in) and/or greater than about 315 g/cm (800 g/in) and/or greater than about 354 g/cm (900 g/in) and/or greater than about 394 g/cm (1000 g/in) and/or from about 118 g/cm (300 g/in) to about 1968 g/cm (5000 g/in) and/or from about 157 g/cm (400 g/in) to about 1181 g/cm (3000 g/in) and/or from about 196 g/cm (500 g/in) to about 984 g/cm (2500 g/in) and/or from about 196 g/cm (500 g/in) to about 787 g/cm (2000 g/in) and/or from about 196 g/cm (500 g/in) to about 591 g/cm (1500 g/in).

The sanitary tissue products of the present invention may exhibit a density (measured at 95 g/in^2) of less than about 0.60 g/cm^3 and/or less than about 0.30 g/cm^3 and/or less than about 0.20 g/cm^3 and/or less than about 0.10 g/cm^3 and/or less than about 0.07 g/cm^3 and/or less than about 0.05 g/cm^3 and/or from about 0.01 g/cm^3 to about 0.20 g/cm^3 and/or from about 0.02 g/cm^3 to about 0.10 g/cm^3.

The sanitary tissue products of the present invention may exhibit a total absorptive capacity of according to the Horizontal Full Sheet (HFS) Test Method described herein of greater than about 10 g/g and/or greater than about 12 g/g and/or greater than about 15 g/g and/or from about 15 g/g to about 50 g/g and/or to about 40 g/g and/or to about 30 g/g.

The sanitary tissue products of the present invention may exhibit a Vertical Full Sheet (VFS) value as determined by the Vertical Full Sheet (VFS) Test Method described herein of greater than about 5 g/g and/or greater than about 7 g/g and/or greater than about 9 g/g and/or from about 9 g/g to about 30 g/g and/or to about 25 g/g and/or to about 20 g/g and/or to about 17 g/g.

The sanitary tissue products of the present invention may be in the form of sanitary tissue product rolls. Such sanitary tissue product rolls may comprise a plurality of connected, but perforated sheets of fibrous structure, that are separably dispensable from adjacent sheets. In one example, one or more ends of the roll of sanitary tissue product may comprise an adhesive and/or dry strength agent to mitigate the loss of fibers, especially wood pulp fibers from the ends of the roll of sanitary tissue product.

The sanitary tissue products of the present invention may comprises additives such as softening agents, temporary wet strength agents, permanent wet strength agents, bulk softening agents, lotions, silicones, wetting agents, latexes, especially surface-pattern-applied latexes, dry strength agents such as carboxymethylcellulose and starch, and other types of additives suitable for inclusion in and/or on sanitary tissue products.

"Weight average molecular weight" as used herein means the weight average molecular weight as determined using gel permeation chromatography according to the protocol found in Colloids and Surfaces A. Physico Chemical & Engineering Aspects, Vol. 162, 2000, pg. 107-121.

"Basis Weight" as used herein is the weight per unit area of a sample reported in lbs/3000 ft^2 or g/m^2.

"Machine Direction" or "MD" as used herein means the direction parallel to the flow of the fibrous structure through the fibrous structure making machine and/or sanitary tissue product manufacturing equipment.

"Cross Machine Direction" or "CD" as used herein means the direction parallel to the width of the fibrous structure making machine and/or sanitary tissue product manufacturing equipment and perpendicular to the machine direction.

"Ply" as used herein means an individual, integral fibrous structure.

"Plies" as used herein means two or more individual, integral fibrous structures disposed in a substantially contiguous, face-to-face relationship with one another, forming a multi-ply fibrous structure and/or multi-ply sanitary tissue product. It is also contemplated that an individual, integral fibrous structure can effectively form a multi-ply fibrous structure, for example, by being folded on itself.

"Total Pore Volume" as used herein means the sum of the fluid holding void volume in each pore range from 1 μm to 1000 μm radii as measured according to the Pore Volume Test Method described herein.

"Pore Volume Distribution" as used herein means the distribution of fluid holding void volume as a function of pore radius. The Pore Volume Distribution of a fibrous structure is measured according to the Pore Volume Test Method described herein.

As used herein, the articles "a" and "an" when used herein, for example, "an anionic surfactant" or "a fiber" is understood to mean one or more of the material that is claimed or described.

All percentages and ratios are calculated by weight unless otherwise indicated. All percentages and ratios are calculated based on the total composition unless otherwise indicated.

Unless otherwise noted, all component or composition levels are in reference to the active level of that component or composition, and are exclusive of impurities, for example, residual solvents or by-products, which may be present in commercially available sources.

Fibrous Structure

It has surprisingly been found that the fibrous structures of the present invention exhibit a pore volume distribution unlike pore volume distributions of other known fibrous structures.

The fibrous structures of the present invention may comprise a plurality of filaments, a plurality of solid additives, such as fibers, and a mixture of filaments and solid additives.

As shown in FIGS. **1** and **2**, examples of fibrous structures according to the present invention as reprsented by plots A and B exhibit a pore volume distribution such that greater

than about 40% of the total pore volume present in the fibrous structure exists in pores of radii of from about 121 μm to about 200 μm and/or greater than about 50% of the total pore volume present in the fibrous structure exists in pores of radii of from about 101 μm to about 200 μm. The ranges of 101 μm to 200 μm and 121 μm to 200 μm are explicitly identified on the graph of FIG. **2**. It should be noted that the value for the ending pore radius for the range of 101 μm to 120 μm is plotted at the ending pore radius; namely, 120 μm. A similar result is shown on FIG. **2** for the value for the ending pore radius for the range of 121 μm to 140 μm, where the value is plotted at the ending pore radius; namely, 140 μm. This data is also supported by the values present in Table 1 below.

Such fibrous structures have been found to exhibit consumer-recognizable beneficial absorbent capacity. In one example, the fibrous structures comprise a plurality of solid additives, for example fibers. In another example, the fibrous structures comprise a plurality of filaments. In yet another example, the fibrous structures comprise a mixture of filaments and solid additives, such as fibers.

As shown in FIG. **2**, the examples of fibrous structures according to the present invention as represented by plots A and B may exhibit a bi-modal pore volume distribution such that the fibrous structure exhibits a pore volume distribution such that the greater than about 40% of the total pore volume present in the fibrous structure exists in pores of radii of from about 121 μm to about 200 μm and greater than about 2% and/or greater than about 5% and/or greater than about 10% of the total pore volume present in the fibrous structure exists in pores of radii of less than about 100 μm and/or less than about 80 μm and/or less than about 50 μm and/or from about 1 μm to about 100 μm and/or from about 5 μm to about 75 μm and/or 10 μm to about 50 μm.

A fibrous structure according to the present invention exhibiting a bi-modal pore volume distribution as described above provides beneficial absorbent capacity and absorbent rate as a result of the larger radii pores and beneficial surface drying as a result of the smaller radii pores.

FIGS. **3** and **4** show schematic representations of an example of a fibrous structure in accordance with the present invention. As shown in FIGS. **3** and **4**, the fibrous structure **10** may be a co-formed fibrous structure. The fibrous structure **10** comprises a plurality of filaments **12**, such as polypropylene fibers, and a plurality of solid additives, such as wood pulp fibers **14**. The filaments **12** may be randomly arranged as a result of the process by which they are spun and/or formed into the fibrous structure **10**. The wood pulp fibers **14**, may be randomly dispersed throughout the fibrous structure **10** in the x-y plane. The wood pulp fibers **14** may be non-randomly dispersed throughout the fibrous structure in the z-direction. In one example (not shown), the wood pulp fibers **14** are present at a higher concentration on one or more of the exterior, x-y plane surfaces than within the fibrous structure along the z-direction.

As shown in FIG. **5**, another example of a fibrous structure in accordance with the present invention is a layered fibrous structure **10'**. The layered fibrous structure **10'** comprises a first layer **16** comprising a plurality of filaments **12**, such as polypropylene filaments, and a plurality of solid additives, in this example wood pulp fibers **14**. The layered fibrous structure **10'** further comprises a second layer **18** comprising a plurality of filaments **20**, such as polypropylene filaments. In one example, the first and second layers **16**, **18**, respectively, are sharply defined zones of concentration of the filaments and/or solid additives. The plurality of filaments **20** may be deposited directly onto a surface of the first layer **16** to form a layered fibrous structure that comprises the first and second layers **16**, **18**, respectively.

Further, the layered fibrous structure **10'** may comprise a third layer **22**, as shown in FIG. **5**. The third layer **22** may comprise a plurality of filaments **24**, which may be the same or different from the filaments **20** in the second and/or first layers **18**, **16**. As a result of the addition of the third layer **22**, the first layer **16** is positioned, for example sandwiched, between the second layer **18** and the third layer **22**. The plurality of filaments **24** may be deposited directly onto a surface of the first layer **16**, opposite from the second layer, to form the layered fibrous structure **10'** that comprises the first, second and third layers **16**, **18**, **22**, respectively.

As shown in FIG. **6**, a cross-sectional schematic representation of another example of a fibrous structure in accordance with the present invention comprising a layered fibrous structure **10"** is provided. The layered fibrous structure **10"** comprises a first layer **26**, a second layer **28** and optionally a third layer **30**. The first layer **26** comprises a plurality of filaments **12**, such as polypropylene filaments, and a plurality of solid additives, such as wood pulp fibers **14**. The second layer **28** may comprise any suitable filaments, solid additives and/or polymeric films. In one example, the second layer **28** comprises a plurality of filaments **34**. In one example, the filaments **34** comprise a polymer selected from the group consisting of: polysaccharides, polysaccharide derivatives, polyvinylalcohol, polyvinylalcohol derivatives and mixtures thereof.

In another example of a fibrous structure in accordance with the present invention, instead of being layers of fibrous structure **10"**, the material forming layers **26**, **28** and **30**, may be in the form of plies wherein two or more of the plies may be combined to form a fibrous structure. The plies may be bonded together, such as by thermal bonding and/or adhesive bonding, to form a multi-ply fibrous structure.

Another example of a fibrous structure of the present invention in accordance with the present invention is shown in FIG. **7**. The fibrous structure **10'"** may comprise two or more plies, wherein one ply **36** comprises any suitable fibrous structure in accordance with the present invention, for example fibrous structure **10** as shown and described in FIGS. **3** and **4** and another ply **38** comprising any suitable fibrous structure, for example a fibrous structure comprising filaments **40**, such as polypropylene filaments. The fibrous structure of ply **38** may be in the form of a net and/or mesh and/or other structure that comprises pores that expose one or more portions of the fibrous structure **10** to an external environment and/or at least to liquids that may come into contact, at least initially, with the fibrous structure of ply **38**. In addition to ply **38**, the fibrous structure **10'"** may further comprise ply **42**. Ply **42** may comprise a fibrous structure comprising filaments **44**, such as polypropylene filaments, and may be the same or different from the fibrous structure of ply **38**.

Two or more of the plies **36**, **38** and **42** may be bonded together, such as by thermal bonding and/or adhesive bonding, to form a multi-ply fibrous structure. After a bonding operation, especially a thermal bonding operation, it may be difficult to distinguish the plies of the fibrous structure **10'"** and the fibrous structure **10'"** may visually and/or physically be a similar to a layered fibrous structure in that one would have difficulty separating the once individual plies from each other. In one example, ply **36** may comprise a fibrous structure that exhibits a basis weight of at least about 15 g/m^2 and/or at least about 20 g/m^2 and/or at least about 25 g/m^2 and/or at least about 30 g/m^2 up to about 120 g/m^2 and/or 100 g/m^2 and/or 80 g/m^2 and/or 60 g/m^2 and the plies

38 and 42, when present, independently and individually, may comprise fibrous structures that exhibit basis weights of less than about 10 g/m^2 and/or less than about 7 g/m^2 and/or less than about 5 g/m^2 and/or less than about 3 g/m^2 and/or less than about 2 g/m^2 and/or to about 0 g/m^2 and/or 0.5 g/m^2.

Plies 38 and 42, when present, may help retain the solid additives, in this case the wood pulp fibers 14, on and/or within the fibrous structure of ply 36 thus reducing lint and/or dust (as compared to a single-ply fibrous structure comprising the fibrous structure of ply 36 without the plies 38 and 42) resulting from the wood pulp fibers 14 becoming free from the fibrous structure of ply 36.

The fibrous structures of the present invention may comprise any suitable amount of filaments and any suitable amount of solid additives. For example, the fibrous structures may comprise from about 10% to about 70% and/or from about 20% to about 60% and/or from about 30% to about 50% by dry weight of the fibrous structure of filaments and from about 90% to about 30% and/or from about 80% to about 40% and/or from about 70% to about 50% by dry weight of the fibrous structure of solid additives, such as wood pulp fibers.

The filaments and solid additives of the present invention may be present in fibrous structures according to the present invention at weight ratios of filaments to solid additives of from at least about 1:1 and/or at least about 1:1.5 and/or at least about 1:2 and/or at least about 1:2.5 and/or at least about 1:3 and/or at least about 1:4 and/or at least about 1:5 and/or at least about 1:7 and/or at least about 1:10.

The fibrous structures of the present invention and/or any sanitary tissue products comprising such fibrous structures may be subjected to any post-processing operations such as embossing operations, printing operations, tuft-generating operations, thermal bonding operations, ultrasonic bonding operations, perforating operations, surface treatment operations such as application of lotions, silicones and/or other materials and mixtures thereof.

Any hydrophobic or non-hydrophilic materials within the fibrous structure, such as polypropylene filaments, may be surface treated and/or melt treated with a hydrophilic modifier. Nonlimiting examples of surface treating hydrophilic modifiers include surfactants, such as Triton X-100. Nonlimiting examples of melt treating hydrophilic modifiers that are added to the melt, such as the polypropylene melt, prior to spinning filaments, include hydrophilic modifying melt additives such as VW351 commercially available from Polyvel, Inc. and Irgasurf commercially available from Ciba. The hydrophilic modifier may be associated with the hydrophobic or non-hydrophilic material at any suitable level known in the art. In one example, the hydrophilic modifier is associated with the hydrophobic or non-hydrophilic material at a level of less than about 20% and/or less than about 15% and/or less than about 10% and/or less than about 5% and/or less than about 3% to about 0% by dry weight of the hydrophobic or non-hydrophilic material.

The fibrous structures of the present invention may include optional additives, each, when present, at individual levels of from about 0% and/or from about 0.01% and/or from about 0.1% and/or from about 1% and/or from about 2% to about 95% and/or to about 80% and/or to about 50% and/or to about 30% and/or to about 20% by dry weight of the fibrous structure. Nonlimiting examples of optional additives include permanent wet strength agents, temporary wet strength agents, dry strength agents such as carboxymethylcellulose and/or starch, softening agents, lint reducing agents, opacity increasing agents, wetting agents, odor absorbing agents, perfumes, temperature indicating agents, color agents, dyes, osmotic materials, microbial growth detection agents, antibacterial agents and mixtures thereof.

The fibrous structure of the present invention may itself be a sanitary tissue product. It may be convolutedly wound about a core to form a roll. It may be combined with one or more other fibrous structures as a ply to form a multi-ply sanitary tissue product. In one example, a co-formed fibrous structure of the present invention may be convolutedly wound about a core to form a roll of co-formed sanitary tissue product. The rolls of sanitary tissue products may also be coreless.

As shown in FIG. 8, a fibrous structure roll 46 comprising a fibrous structure, such as a fibrous structure according to the present invention, comprises end edges 48, 50. At least one of the end edges 48, 50 comprises a bond region 52. The bond region 52 may comprise a plurality of bond subregions (not shown) that are present at a frequency of at least about 10 and/or at least about 50 and/or at least about 100 and/or at least about 200 per inch, such as dots per inch (dpi). In one example, the bond region 52 may cover the entire or substantially the entire surface area of the end edge 48. In one example, the bond region 52 comprises greater than about 20% and/or greater than about 25% and/or greater than about 30% and/or greater than about 50% of the total surface area of the end edge 48. In one example, the bond region 52 is a film that comprises the entire or substantially entire total surface area of the end edge 48. In another example, the bond region 52 is present on a non-lotioned fibrous structure.

The bond region 52 may comprise a bonding agent selected from chemical agents and/or mechanical agents. Nonlimiting examples of chemical agents include dry strength agents and wet strength agents and mixtures thereof. The mechanical agents may be in the form of a liquid and/or a solid. A liquid mechanical agent may be an oil. A solid mechanical agent may be a wax.

The bond region 52 may comprise different types of bonding agents and/or bonding agents that are chemically different from the filaments and/or fibers present in the fibrous structure. In one example, the material comprises a bonding agent, such as a dry strength resin such as a polysaccharide and/or a polysaccharide derivative and temporary and permanent wet strength resins. Nonlimiting examples of suitable bonding agents include latex dispersions, polyvinyl alcohol, Parez®, Kymene®, carboxymethylcellulose and starch.

As shown in FIG. 9, a fibrous structure 54 in accordance with the present invention may comprise edges 56, 58, 60, 62. One or more of the edges 56, 58, 60, 62 may comprise a bond region 64. The bond region 64 may extend inwardly from the edge 56, for example less than about 1 cm and/or less than about 0.5 cm. Any of the edges may comprise such a bond region. The bond region 64 may comprise a plurality of bond subregions (not shown) that are present at a frequency of at least 10 and/or at least 50 and/or at least 100 and/or at least 200 per inch, such as dots per inch (dpi). The bond region 64 may comprise a material chemically different from the filaments and/or fibers present in the fibrous structure. In one example, the material comprises a bonding agent, such as a dry strength resin such as a polysaccharide and/or a polysaccharide derivative. Nonlimiting examples of suitable bonding agents include carboxymethylcellulose and starch

To further illustrate the fibrous structures of the present invention, Table 1 sets forth the average pore volume

distributions of known and/or commercially available fibrous structures and a fibrous structure in accordance with the present invention.

TABLE 1

Pore Radius (μm)	Huggies ®	Huggies ® Wash Cloth	Duramax	Concert EBT.055.1010 TBAL	LBAL-DUNI embossed	Bounty ®	Invention Example A	Invention Example B
1	0	0	0	0	0	0	0	0
2.5	19.25	29.6	32.4	33.65	34.4	31.1	19.55	15.85
5	11.65	16.1	17.85	18.1	18.25	17.6	12.4	7.95
10	11.7	12.6	28.5	14.4	14.75	32.8	10.35	6.45
15	7.95	7.05	101.7	8.65	8.5	52.3	6.45	3.2
20	7.15	4.65	62.7	6.45	6.4	36.7	3.8	2.45
30	31.35	6.45	91.55	9.1	9.55	54	7.1	3.65
40	110.4	5.5	82.1	26.3	127.25	47.8	6.4	3.4
50	133.05	6.5	77.35	65.95	71.4	43.6	6.5	4.6
60	200.1	96.55	70.5	74.7	59.95	38.9	7.5	6.55
70	302.45	144.85	61.65	70.25	69.05	36.3	13.85	11.3
80	336.9	132.35	56.05	102.05	95.05	33.9	150.85	63.15
90	250.9	150.8	49.3	174.05	150.1	33	137.5	128
100	160.15	162.8	48.3	293	232.9	32.2	143.35	129.25
120	172.8	394.1	95.6	693.4	464.15	64.7	359.75	306.05
140	85.1	451.7	89.5	162.55	176.45	68.5	578.8	521.95
160	54	505.45	76.6	19.35	49.6	74.8	485.85	613.35
180	37.3	509.7	63.45	10.15	24.3	78.5	257.65	243.3
200	30.15	450.95	50	8.2	18.55	89.2	108.7	69.15
225	28.2	409.15	51.6	8.5	18.95	134.4	56.15	32.55
250	22.85	245.2	44	7.5	16.25	149.8	32.3	20.6
275	22.15	144.1	40.25	2.7	14.9	157.9	22.75	13.75
300	18.4	101.3	35.95	10.05	13.75	125.7	24.6	7.9
350	29.95	153.2	60.7	10.9	25.4	145	41.95	24.45
400	24.25	141.7	59.25	9.65	26.65	52.4	40.55	17.55
500	45.6	271.15	266.45	15.75	116.85	56	51.45	31.05
600	34.3	230.95	291.9	14.5	71.3	23.9	33.45	27.95
800	46.65	261.6	162.4	24.3	34.25	34.9	45.35	32.6
1000	38.75	112.55	29.15	24.9	30.35	24.9	34.6	25.55
Total	2273.45	5158.6	2196.75	1919.05	1999.25	1770.8	2699.5	2373.55
101-200 μm	16.7%	44.8%	17.1%	46.6%	36.7%	21.2%	66.3%	73.9%
121-200 μm	9.1%	37.2%	12.7%	10.4%	13.5%	17.6%	53.0%	61.0%

The fibrous structures of the present invention may exhibit a unique combination of fibrous structure properties that do not exist in known fibrous structures. For example, the fibrous structures may exhibit a VFS of greater than about 11 g/g and/or greater than about 12 g/g and/or greater than about 13 g/g and/or greater than about 14 g/g and/or less than about 50 g/g and/or less than about 40 g/g and/or less than about 30 g/g and/or less than about 20 g/g and/or from about 11 g/g to about 50 g/g and/or from about 11 g/g to about 40 g/g and/or from about 11 g/g to about 30 g/g and/or from about 11 g/g to about 20 g/g.

In addition to the VFS property, the fibrous structures of the present invention may exhibit a Dry CD Tensile Modulus of less than about 1500 g/cm and/or less than about 1400 g/cm and/or less than about 1300 g/cm and/or less than about 1100 g/cm and/or less than about 1000 g/cm and/or less than about 800 g/cm and/or greater than about 50 g/cm and/or greater than about 100 g/cm and/or greater than about 300 g/cm and/or from about 50 g/cm to about 1500 g/cm and/or from about 100 g/cm to about 1400 g/cm and/or from about 100 g/cm to about 1300 g/cm.

In addition to the VFS property and/or the Dry CD Tensile Modulus property, the fibrous structures of the present invention may exhibit a Wet CD TEA of greater than about 35 (g·in)/in^2 and/or greater than about 50 (g·in)/in^2 and/or greater than about 75 (g·in)/in^2 and/or greater than about 90 (g·in)/in^2 and/or greater than about 150 (g·in)/in^2 and/or greater than about 175 (g·in)/in^2 and/or less than about 500 (g·in)/in^2 and/or less than about 400 (g·in)/in^2 and/or less than about 350 (g·in)/in^2 and/or less than about 300 (g·in)/in^2 and/or from about 35 (g·in)/in^2 to about 500 (g·in)/in^2 and/or from about 35 (g·in)/in^2 to about 400 (g·in)/in^2 and/or from about 50 (g·in)/in^2 to about 350 (g·in)/in^2 and/or from about 75 (g·in)/in^2 to about 300 (g·in)/in^2.

In addition to the VFS property and/or the Dry CD Tensile Modulus property and/or the Wet CD TEA, the fibrous structures of the present invention may exhibit a Wet MD TEA of greater than about 40 (g·in)/in^2 and/or greater than about 50 (g·in)/in^2 and/or greater than about 75 (g·in)/in^2 and/or greater than about 90 (g·in)/in^2 and/or greater than about 150 (g·in)/in^2 and/or greater than about 175 (g·in)/in^2 and/or less than about 500 (g·in)/in^2 and/or less than about 400 (g·in)/in^2 and/or less than about 350 (g·in)/in^2 and/or less than about 300 (g·in)/in^2 and/or from about 40 (g·in)/in^2 to about 500 (g·in)/in^2 and/or from about 35 (g·in)/in^2 to about 400 (g·in)/in^2 and/or from about 50 (g·in)/in^2 to about 350 (g·in)/in^2 and/or from about 75 (g·in)/in^2 to about 300 (g·in)/in^2.

In one example of the fibrous structures of the present invention, the fibrous structure exhibits a VFS of greater than about 11 g/g and one or more of the following: a Dry CD Tensile Modulus of less than about 1500 g/cm and/or a Wet CD TEA of greater than about 35 (g·in)/in^2 and/or a Wet MD TEA of greater than about 40 (g·in)/in^2.

The values of these properties associated with a fibrous structure are determined according to the respective test methods described herein.

To further illustrate the fibrous structures of the present invention, Table 2 sets forth certain properties of known and

commercially available fibrous structures and a fibrous structure in accordance with the present invention.

TABLE 2

Property	Duramax ®	Viva ® (Wetlaid)	Viva ® (Airlaid)	Bounty ®	Scott ®	Sparkle ®	Invention Example
Wet MD TEA (g · in)/in^2	377	21.4	34.5	22.4	16.7	14.8	90
Wet CD TEA (g · in)/in^2	340	22.6	31.7	18.1	8.9	8.1	209
Dry CD Tensile Modulus g/cm	728	299	660	1844	1500	5900	400
VFS g/g	5.7	10.4	10.9	9.9	8	5.6	13

Process for Making a Fibrous Structure

A nonlimiting example of a process for making a fibrous structure according to the present invention is represented in FIG. **10**. The process shown in FIG. **10** comprises the step of mixing a plurality of solid additives **14** with a plurality of filaments **12**. In one example, the solid additives **14** are wood pulp fibers, such as SSK fibers and/or Eucalytpus fibers, and the filaments **12** are polypropylene filaments. The solid additives **14** may be combined with the filaments **12**, such as by being delivered to a stream of filaments **12** from a hammermill **66** via a solid additive spreader **67** to form a mixture of filaments **12** and solid additives **14**. The filaments **12** may be created by meltblowing from a meltblow die **68**. The mixture of solid additives **14** and filaments **12** are collected on a collection device, such as a belt **70** to form a fibrous structure **72**. The collection device may be a patterned and/or molded belt that results in the fibrous structure exhibiting a surface pattern, such as a non-random, repeating pattern. The molded belt may have a three-dimensional pattern on it that gets imparted to the fibrous structure **72** during the process.

In one example of the present invention, the fibrous structures are made using a die comprising at least one filament-forming hole, and/or 2 or more and/or 3 or more rows of filament-forming holes from which filaments are spun. At least one row of holes contains 2 or more and/or 3 or more and/or 10 or more filament-forming holes. In addition to the filament-forming holes, the die comprises fluid-releasing holes, such as gas-releasing holes, in one example air-releasing holes, that provide attenuation to the filaments formed from the filament-forming holes. One or more fluid-releasing holes may be associated with a filament-forming hole such that the fluid exiting the fluid-releasing hole is parallel or substantially parallel (rather than angled like a knife-edge die) to an exterior surface of a filament exiting the filament-forming hole. In one example, the fluid exiting the fluid-releasing hole contacts the exterior surface of a filament formed from a filament-forming hole at an angle of less than 30° and/or less than 20° and/or less than 10° and/or less than 5° and/or about 0°. One or more fluid releasing holes may be arranged around a filament-forming hole. In one example, one or more fluid-releasing holes are associated with a single filament-forming hole such that the fluid exiting the one or more fluid releasing holes contacts the exterior surface of a single filament formed from the single filament-forming hole. In one example, the fluid-releasing hole permits a fluid, such as a gas, for example air, to contact the exterior surface of a filament formed from a filament-forming hole rather than contacting an inner surface of a filament, such as what happens when a hollow filament is formed.

In one example, the die comprises a filament-forming hole positioned within a fluid-releasing hole. The fluid-releasing hole **74** may be concentrically or substantially concentrically positioned around a filament-forming hole **76** such as is shown in FIG. **11**.

In another example, the die comprises filament-forming holes and fluid-releasing holes arranged to produce a plurality of filaments that exhibit a broader range of filament diameters than known filament-forming hole dies, such as knife-edge dies. For example, as shown in FIG. **12**, a fibrous structure made by a known knife-edge die produces a fibrous structure comprising filaments having a narrower distribution of average filament diameters than a fibrous structure made by a die according to the present invention, as shown in FIG. **13**. As is evidenced by FIG. **13**, the fibrous structure made by a die according to the present invention may comprise filaments that exhibit an average filament diameter of less than 1 μm. Such filaments are not seen in the fibrous structure made by the known knife-edge die as shown in FIG. **12**.

After the fibrous structure **72** has been formed on the collection device, the fibrous structure **72** may be subjected to post-processing operations such as embossing, thermal bonding, tuft-generating operations, moisture-imparting operations, and surface treating operations to form a finished fibrous structure. One example of a surface treating operation that the fibrous structure may be subjected to is the surface application of an elastomeric binder, such as ethylene vinyl acetate (EVA), latexes, and other elastomeric binders. Such an elastomeric binder may aid in reducing the lint created from the fibrous structure during use by consumers. The elastomeric binder may be applied to one or more surfaces of the fibrous structure in a pattern, especially a non-random repeating pattern, or in a manner that covers or substantially covers the entire surface(s) of the fibrous structure.

In one example, the fibrous structure **72** and/or the finished fibrous structure may be combined with one or more other fibrous structures. For example, another fibrous structure, such as a filament-containing fibrous structure, such as a polypropylene filament fibrous structure may be associated with a surface of the fibrous structure **72** and/or the finished fibrous structure. The polypropylene filament fibrous structure may be formed by meltblowing polypropylene filaments (filaments that comprise a second polymer that may be the same or different from the polymer of the filaments in the fibrous structure **72**) onto a surface of the fibrous structure **72** and/or finished fibrous structure. In another example, the polypropylene filament fibrous structure may be formed by meltblowing filaments comprising a second polymer that may be the same or different from the polymer of the filaments in the fibrous structure **72** onto a collection device

to form the polypropylene filament fibrous structure. The polypropylene filament fibrous structure may then be combined with the fibrous structure **72** or the finished fibrous structure to make a two-ply fibrous structure—three-ply if the fibrous structure **72** or the finished fibrous structure is positioned between two plies of the polypropylene filament fibrous structure like that shown in FIG. **5** for example. The polypropylene filament fibrous structure may be thermally bonded to the fibrous structure **72** or the finished fibrous structure via a thermal bonding operation.

In yet another example, the fibrous structure **72** and/or finished fibrous structure may be combined with a filament-containing fibrous structure such that the filament-containing fibrous structure, such as a polysaccharide filament fibrous structure, such as a starch filament fibrous structure, is positioned between two fibrous structures **72** or two finished fibrous structures like that shown in FIG. **6** for example.

The process for making fibrous structure **72** may be close coupled (where the fibrous structure is convolutedly wound into a roll prior to proceeding to a converting operation) or directly coupled (where the fibrous structure is not convolutedly wound into a roll prior to proceeding to a converting operation) with a converting operation to emboss, print, deform, surface treat, or other post-forming operation known to those in the art. For purposes of the present invention, direct coupling means that the fibrous structure **72** can proceed directly into a converting operation rather than, for example, being convolutedly wound into a roll and then unwound to proceed through a converting operation.

The process of the present invention may include preparing individual rolls of fibrous structure and/or sanitary tissue product comprising such fibrous structure(s) that are suitable for consumer use. The fibrous structure may be contacted by a bonding agent (such as an adhesive and/or dry strength agent), such that the ends of a roll of sanitary tissue product according to the present invention comprise such adhesive and/or dry strength agent.

The process may further comprise contacting an end edge of a roll of fibrous structure with a material that is chemically different from the filaments and fibers, to create bond regions that bond the fibers present at the end edge and reduce lint production during use. The material may be applied by any suitable process known in the art. Nonlimiting examples of suitable processes for applying the material include non-contact applications, such as spraying, and contact applications, such as gravure roll printing, extruding, surface transferring. In addition, the application of the material may occur by transfer from contact of a log saw and/or perforating blade containing the material since, for example, the perforating operation, an edge of the fibrous structure that may produce lint upon dispensing a fibrous structure sheet from an adjacent fibrous structure sheet may be created.

Nonlimiting Example of Process for Making a Fibrous Structure of the Present Invention

A 47.5%:47.5%:5% blend of Exxon-Mobil PP3546 polypropylene:Sunoco CP200VM polypropylene:Polyvel S-1416 wetting agent is dry blended, to form a melt blend. The melt blend is heated to 475° F. through a melt extruder. A 10" wide Biax 12 row spinnerette with 192 nozzles per cross-direction inch, commercially available from Biax Fiberfilm Corporation, is utilized. 32 nozzles per cross-direction inch of the 192 nozzles have a 0.018" inside diameter while the remaining nozzles are solid, i.e. there is no opening in the nozzle. Approximately 0.17 grams per hole per minute (ghm) of the melt blend is extruded from the open nozzles to form meltblown filaments from the melt blend. Approximately 200 SCFM of compressed air is heated such that the air exhibits a temperature of 395° F. at the spinnerette. Approximately 175 grams/minute of Koch 4825 semi-treated SSK pulp is defibrillated through a hammermill to form SSK wood pulp fibers (solid additive). 330 SCFM of air at 85-90° F. and 85% relative humidity (RH) is drawn into the hammermill and carries the pulp fibers to a solid additive spreader. The solid additive spreader turns the pulp fibers and distributes the pulp fibers in the cross-direction such that the pulp fibers are injected into the meltblown filaments in a perpendicular fashion through a 2"×10" cross-direction (CD) slot. A forming box surrounds the area where the meltblown filaments and pulp fibers are commingled. This forming box is designed to reduce the amount of air allowed to enter or escape from this commingling area; however, there is a 2"×12" opening in the bottom of the forming box designed to permit additional cooling air to enter. A forming vacuum pulls air through a forming fabric thus collecting the commingled meltblown filaments and pulp fibers to form a fibrous structure. The forming vacuum is adjusted until an additional 400 SCFM of room air is drawn into the slot in the forming box. The fibrous structure formed by this process comprises about 75% by dry fibrous structure weight of pulp and about 25% by dry fibrous structure weight of meltblown filaments.

As shown in FIG. **14**, the solid additive spreader **78** has an inlet **80** and an exit **82**. Any suitable material known in the art may be used to make the spreader **78**. Nonlimiting examples of suitable materials include non-conductive materials. For example, stainless steel and/or sheet metal may be used to fabricate the spreader **78**. A pulp and air mixture **84** created in the hammermill (not shown) enters the spreader **78** through a duct (not shown) connecting the hammermill and spreader **78** at greater than about 8,000 fpm velocity and/or greater than about 14,000 fpm. The inlet **80** is tilted at an angle α at approximately 5° upstream from perpendicular of the exit **82**. The exit **82** of the solid additive spreader **78** has a height H in the range of about 2.54 cm (1 inch) to about 25.40 cm (10 inches). The width W of the exit **82** is from about 1.27 cm (0.5 inch) to about 10.16 cm (4 inches). Typically the width W of the exit **82** is about 5.08 cm (2 inches). The length L of the spreader **78** is from about 60.96 cm (24 inches) to about 243.84 cm (96 inches) and/or from about 91.44 cm (36 inches) to about 182.88 cm (72 inches) and/or from about 121.92 cm (48 inches) to about 152.40 cm (60 inches). A tapering of the height H of the spreader **78** occurs from the inlet end **86** to the exit end **88** to continually accelerate the pulp and air mixture **84**. This tapering is from about 10.16 cm (4 inches) in height at the inlet **80** to about 5.08 cm (2 inches) in height at the exit **82**. However, the spreader **78** may incorporate other similar taperings. The inlet end **86** of the spreader **78** has a semi-circular arc from the top view with a radius of from about 7.62 cm (3 inches) to about 50.80 cm (20 inches) and/or from about 12.70 cm (5 inches) to about 25.40 cm (10 inches). As shown in FIG. **15**, multiple semi-circular arcs can be assembled to produce the desired spreader width. Each semi-circular arc would comprise its own inlet **80** centered in each of these semi-circular arcs.

Optionally, a meltblown layer of the meltblown filaments can be added to one or both sides of the above formed fibrous structure. This addition of the meltblown layer can help reduce the lint created from the fibrous structure during use by consumers and is preferably performed prior to any thermal bonding operation of the fibrous structure. The meltblown filaments for the exterior layers can be the same

or different than the meltblown filaments used on the opposite layer or in the center layer(s).

The fibrous structure may be convolutedly wound to form a roll of fibrous structure. The end edges of the roll of fibrous structure may be contacted with a material to create bond regions.

TEST METHODS

Unless otherwise indicated, all tests described herein including those described under the Definitions section and the following test methods are conducted on samples that have been conditioned in a conditioned room at a temperature of 73° F.±4° F. (about 23° C.±2.2° C.) and a relative humidity of 50%±10% for 2 hours prior to the test. Samples conditioned as described herein are considered dry samples (such as "dry fibrous structures") for purposes of this invention. Further, all tests are conducted in such conditioned room.

A. Pore Volume Distribution Test Method

Pore Volume Distribution measurements are made on a TRI/Autoporosimeter (TRI/Princeton Inc. of Princeton, N.J.). The TRI/Autoporosimeter is an automated computer-controlled instrument for measuring pore volume distributions in porous materials (e.g., the volumes of different size pores within the range from 1 to 1000 □μm effective pore radii). Complimentary Automated Instrument Software, Release 2000.1, and Data Treatment Software, Release 2000.1 is used to capture, analyze and output the data. More information on the TRI/Autoporosimeter, its operation and data treatments can be found in The Journal of Colloid and Interface Science 162 (1994), pgs 163-170, incorporated here by reference.

As used in this application, determining Pore Volume Distribution involves recording the increment of liquid that enters a porous material as the surrounding air pressure changes. A sample in the test chamber is exposed to precisely controlled changes in air pressure. The size (radius) of the largest pore able to hold liquid is a function of the air pressure. As the air pressure increases (decreases), different size pore groups drain (absorb) liquid. The pore volume of each group is equal to this amount of liquid, as measured by the instrument at the corresponding pressure. The effective radius of a pore is related to the pressure differential by the following relationship.

$$\text{Pressure differential}=[(2)\gamma \cos \Theta]/\text{effective radius}$$

where γ=liquid surface tension, and Θ=contact angle.

Typically pores are thought of in terms such as voids, holes or conduits in a porous material. It is important to note that this method uses the above equation to calculate effective pore radii based on the constants and equipment controlled pressures. The above equation assumes uniform cylindrical pores. Usually, the pores in natural and manufactured porous materials are not perfectly cylindrical, nor all uniform. Therefore, the effective radii reported here may not equate exactly to measurements of void dimensions obtained by other methods such as microscopy. However, these measurements do provide an accepted means to characterize relative differences in void structure between materials.

The equipment operates by changing the test chamber air pressure in user-specified increments, either by decreasing pressure (increasing pore size) to absorb liquid, or increasing pressure (decreasing pore size) to drain liquid. The liquid volume absorbed (drained) at each pressure increment is the cumulative volume for the group of all pores between the preceding pressure setting and the current setting.

In this application of the TRI/Autoporosimeter, the liquid is a 0.2 weight % solution of octylphenoxy polyethoxy ethanol (Triton X-100 from Union Carbide Chemical and Plastics Co. of Danbury, Conn.) in distilled water. The instrument calculation constants are as follows: ρ (density) =1 g/cm^3; γ (surface tension)=31 dynes/cm; cos Θ=1. A 0.22 μm Millipore Glass Filter (Millipore Corporation of Bedford, Mass.; Catalog # GSWP09025) is employed on the test chamber's porous plate. A plexiglass plate weighing about 24 g (supplied with the instrument) is placed on the sample to ensure the sample rests flat on the Millipore Filter. No additional weight is placed on the sample.

The remaining user specified inputs are described below. The sequence of pore sizes (pressures) for this application is as follows (effective pore radius in μm): 1, 2.5, 5, 10, 15, 20, 30, 40, 50, 60, 70, 80, 90, 100, 120, 140, 160, 180, 200, 225, 250, 275, 300, 350, 400, 500, 600, 800, 1000. This sequence starts with the sample dry, saturates it as the pore settings increase (typically referred to with respect to the procedure and instrument as the 1st absorption).

In addition to the test materials, a blank condition (no sample between plexiglass plate and Millipore Filter) is run to account for any surface and/or edge effects within the chamber. Any pore volume measured for this blank run is subtracted from the applicable pore grouping of the test sample. This data treatment can be accomplished manually or with the available TRI/Autoporosimeter Data Treatment Software, Release 2000.1.

Percent (%) Total Pore Volume is a percentage calculated by taking the volume of fluid in the specific pore radii range divided by the Total Pore Volume. The TRI/Autoporosimeter outputs the volume of fluid within a range of pore radii. The first data obtained is for the "2.5 micron" pore radii which includes fluid absorbed between the pore sizes of 1 to 2.5 micron radius. The next data obtained is for "5 micron" pore radii, which includes fluid absorbed between the 2.5 micron and 5 micron radii, and so on. Following this logic, to obtain the volume held within the range of 101-200 micron radii, one would sum the volumes obtained in the range titled "120 micron", "140 micron", "160 micron", "180 micron", and finally the "200 micron" pore radii ranges. For example, % Total Pore Volume 101-200 micron pore radii=(volume of fluid between 101-200 micron pore radii)/Total Pore Volume

B. Horizontal Full Sheet (HFS) Test Method

The Horizontal Full Sheet (HFS) test method determines the amount of distilled water absorbed and retained by a fibrous structure of the present invention. This method is performed by first weighing a sample of the fibrous structure to be tested (referred to herein as the "dry weight of the sample"), then thoroughly wetting the sample, draining the wetted sample in a horizontal position and then reweighing (referred to herein as "wet weight of the sample"). The absorptive capacity of the sample is then computed as the amount of water retained in units of grams of water absorbed by the sample. When evaluating different fibrous structure samples, the same size of fibrous structure is used for all samples tested.

The apparatus for determining the HFS capacity of fibrous structures comprises the following:

1) An electronic balance with a sensitivity of at least ±0.01 grams and a minimum capacity of 1200 grams. The balance should be positioned on a balance table and slab to minimize the vibration effects of floor/benchtop weighing. The balance should also have a special balance pan to be able to handle the size of the sample tested (i.e.; a fibrous

structure sample of about 11 in. (27.9 cm) by 11 in. (27.9 cm)). The balance pan can be made out of a variety of materials. Plexiglass is a common material used.

2) A sample support rack (FIG. **16**) and sample support rack cover (FIG. **17**) is also required. Both the rack and cover are comprised of a lightweight metal frame, strung with 0.012 in. (0.305 cm) diameter monofilament so as to form a grid as shown in FIG. **16**. The size of the support rack and cover is such that the sample size can be conveniently placed between the two.

The HFS test is performed in an environment maintained at 23±1° C. and 50±2% relative humidity. A water reservoir or tub is filled with distilled water at 23±1° C. to a depth of 3 inches (7.6 cm).

Eight samples of a fibrous structure to be tested are carefully weighed on the balance to the nearest 0.01 grams. The dry weight of each sample is reported to the nearest 0.01 grams. The empty sample support rack is placed on the balance with the special balance pan described above. The balance is then zeroed (tared). One sample is carefully placed on the sample support rack. The support rack cover is placed on top of the support rack. The sample (now sandwiched between the rack and cover) is submerged in the water reservoir. After the sample is submerged for 60 seconds, the sample support rack and cover are gently raised out of the reservoir.

The sample, support rack and cover are allowed to drain horizontally for 120±5 seconds, taking care not to excessively shake or vibrate the sample. While the sample is draining, the rack cover is carefully removed and all excess water is wiped from the support rack. The wet sample and the support rack are weighed on the previously tared balance. The weight is recorded to the nearest 0.01 g. This is the wet weight of the sample.

The gram per fibrous structure sample absorptive capacity of the sample is defined as (wet weight of the sample−dry weight of the sample). The horizontal absorbent capacity (HAC) is defined as: absorbent capacity=(wet weight of the sample−dry weight of the sample)/(dry weight of the sample) and has a unit of gram/gram.

C. Vertical Full Sheet (VFS) Test Method

The Vertical Full Sheet (VFS) test method determines the amount of distilled water absorbed and retained by a fibrous structure of the present invention. This method is performed by first weighing a sample of the fibrous structure to be tested (referred to herein as the "dry weight of the sample"), then thoroughly wetting the sample, draining the wetted sample in a vertical position and then reweighing (referred to herein as "wet weight of the sample"). The absorptive capacity of the sample is then computed as the amount of water retained in units of grams of water absorbed by the sample. When evaluating different fibrous structure samples, the same size of fibrous structure is used for all samples tested.

The apparatus for determining the VFS capacity of fibrous structures comprises the following:

1) An electronic balance with a sensitivity of at least ±0.01 grams and a minimum capacity of 1200 grams. The balance should be positioned on a balance table and slab to minimize the vibration effects of floor/benchtop weighing. The balance should also have a special balance pan to be able to handle the size of the sample tested (i.e.; a fibrous structure sample of about 11 in. (27.9 cm) by 11 in. (27.9 cm)). The balance pan can be made out of a variety of materials. Plexiglass is a common material used.

2) A sample support rack (FIG. **16**) and sample support rack cover (FIG. **17**) is also required. Both the rack and cover are comprised of a lightweight metal frame, strung with 0.012 in. (0.305 cm) diameter monofilament so as to form a grid as shown in FIG. **16**. The size of the support rack and cover is such that the sample size can be conveniently placed between the two.

The VFS test is performed in an environment maintained at 23±1° C. and 50±2% relative humidity. A water reservoir or tub is filled with distilled water at 23±1° C. to a depth of 3 inches (7.6 cm).

Eight 19.05 cm (7.5 inch)×19.05 cm (7.5 inch) to 27.94 cm (11 inch)×27.94 cm (11 inch) samples of a fibrous structure to be tested are carefully weighed on the balance to the nearest 0.01 grams. The dry weight of each sample is reported to the nearest 0.01 grams. The empty sample support rack is placed on the balance with the special balance pan described above. The balance is then zeroed (tared). One sample is carefully placed on the sample support rack. The support rack cover is placed on top of the support rack. The sample (now sandwiched between the rack and cover) is submerged in the water reservoir. After the sample is submerged for 60 seconds, the sample support rack and cover are gently raised out of the reservoir.

The sample, support rack and cover are allowed to drain vertically for 60±5 seconds, taking care not to excessively shake or vibrate the sample. While the sample is draining, the rack cover is carefully removed and all excess water is wiped from the support rack. The wet sample and the support rack are weighed on the previously tared balance. The weight is recorded to the nearest 0.01 g. This is the wet weight of the sample.

The procedure is repeated for with another sample of the fibrous structure, however, the sample is positioned on the support rack such that the sample is rotated 90° compared to the position of the first sample on the support rack.

The gram per fibrous structure sample absorptive capacity of the sample is defined as (wet weight of the sample−dry weight of the sample). The calculated VFS is the average of the absorptive capacities of the two samples of the fibrous structure.

D. Wet MD TEA, Wet CD TEA, Dry CD Tensile Modulus ("Tangent Modulus") Test Methods

The Wet MD TEA, Wet CD TEA and Dry CD Tensile Modulus of a fibrous structure are all determined using a Thwing Albert EJA Tensile Tester. A 2.54 cm (1 inch) wide strip of the fibrous structure to be tested is placed in the grips of the Tensile Tester at a gauge length of 10.16 cm (4 inches). The Crosshead Speed of the Tensile Tester is set at 10.16 cm/min (4 inches/min) and the Break Sensitivity is set at 20 g. Eight (8) samples are run on the Tensile Tester and an average of the respective Wet MD TEA, Wet CD TEA values from the 8 samples is reported as the Wet MD TEA value and the Wet CD TEA. The Dry CD Tensile Modulus is reported as the average of the Dry CD Tensile Modulus from the 8 samples measured at 15 g/cm.

E. Basis Weight Test Method

Basis weight is measured by preparing one or more samples of a certain area (m^2) and weighing the sample(s) of a fibrous structure according to the present invention and/or a paper product comprising such fibrous structure on a top loading balance with a minimum resolution of 0.01 g. The balance is protected from air drafts and other disturbances using a draft shield. Weights are recorded when the readings on the balance become constant. The average weight (g) is calculated and the average area of the samples (m^2). The basis weight (g/m^2) is calculated by dividing the average weight (g) by the average area of the samples (m^2).

The dimensions and values disclosed herein are not to be understood as being strictly limited to the exact numerical values recited. Instead, unless otherwise specified, each such dimension is intended to mean both the recited value and a functionally equivalent range surrounding that value. For example, a dimension disclosed as "40 mm" is intended to mean "about 40 mm."

All documents cited in the Detailed Description of the Invention are, in relevant part, incorporated herein by reference; the citation of any document is not to be construed as an admission that it is prior art with respect to the present invention. To the extent that any meaning or definition of a term in this document conflicts with any meaning or definition of the same term in a document incorporated by reference, the meaning or definition assigned to that term in this document shall govern.

While particular embodiments of the present invention have been illustrated and described, it would be obvious to those skilled in the art that various other changes and modifications can be made without departing from the spirit and scope of the invention. It is therefore intended to cover in the appended claims all such changes and modifications that are within the scope of this invention.

What is claimed is:

1. A process for making a fibrous structure, the process comprising the steps of:

a. providing a die comprising one or more filament-forming holes, wherein one or more fluid-releasing holes are associated with one filament-forming hole such that a fluid exiting the fluid-releasing hole contacts an exterior surface of a filament exiting the filament-forming hole at an angle of less than 10°;
b. supplying at least a first polymer to the die;
c. producing a plurality of filaments comprising the first polymer from the die;
d. supplying a fluid to the die such that the fluid exits the one or more fluid-releasing holes parallel or substantially parallel to the exterior surface of at least one of the filaments;
e. combining the filaments with solid additives to form a mixture; and
f. collecting the mixture on a collection device to produce a fibrous structure.

2. The process according to claim **1** wherein the die comprises two or more rows of filament-forming holes.

3. The process according to claim **2** wherein at least one row of filament-forming holes comprises two or more filament-forming holes.

4. The process according to claim **1** wherein more than one fluid-releasing hole are associated with a filament-forming hole.

5. The process according to claim **1** wherein one fluid-releasing hole is concentrically positioned around one filament-forming hole.

6. The process according to claim **1** wherein the first polymer comprises a synthetic polymer.

7. The process according to claim **6** wherein the synthetic polymer is selected from the group consisting of: polyvinyl alcohol, polyvinyl alcohol derivatives, polyesters, nylons, polyolefins, polylactic acids, polyhydroxyalkanoates, polycaprolactones and mixtures thereof.

8. The process according to claim **7** wherein the synthetic polymer comprises a polyolefin.

9. The process according to claim **8** wherein the polyolefin comprises polypropylene.

10. The process according to claim **1** wherein the first polymer comprises a natural polymer.

11. The process according to claim **10** wherein the natural polymer is selected from the group consisting of: starch, starch derivatives, cellulose, cellulose derivatives, hemicellulose, hemicellulose derivatives and mixtures thereof.

12. The process according to claim **1** wherein the first polymer comprises a compostable polymer.

13. The process according to claim **12** wherein the compostable polymer is selected from the group consisting of: polylactic acids, polyhydroxyalkanoates, polycaprolactones and mixtures thereof.

14. The process according to claim **1** wherein the solid additives comprise fibers.

15. The process according to claim **14** wherein the fibers comprise wood pulp fibers.

16. The process according to claim **1** wherein the solid additives are combined with the plurality of filaments by a solid additive spreader.

17. The process according to claim **1** wherein the process further comprises the step of:

g. contacting a surface of the fibrous structure with a plurality of filaments comprising a second polymer.

18. The process according to claim **17** wherein the plurality of filaments comprising the second polymer are in the form of a second fibrous structure.

19. The process according to claim **17** wherein the second polymer is the same as the first polymer.

20. The process according to claim **1** wherein the fluid released by the fluid-releasing holes comprises air.

21. The process according to claim **1** wherein the fibrous structure exhibits a pore volume distribution such that greater than about 40% of the total pore volume present in the fibrous structure exists in pores of radii of from about 121 μm to about 200 μm.

22. The process according to claim **1** wherein the process further comprises the step of subjecting the fibrous structure to a thermal bonding operation.

23. The process according to claim **1** wherein the process is directly coupled to a post-processing operation.

24. The process according to claim **1** wherein the process is closely coupled to a post-processing operation.

25. A process for making a fibrous structure, the process comprising the steps of:

a. providing a die comprising one or more filament-forming holes, wherein one or more fluid-releasing holes are associated with one filament-forming hole such that a fluid exiting the fluid-releasing hole contacts an exterior surface of a filament exiting the filament-forming hole at an angle of less than 10°;
b. supplying a polyolefin polymer to the die;
c. producing a plurality of filaments comprising the polyolefin polymer from the die;
d. combining the filaments with wood pulp fibers to form a mixture; and
e. collecting the mixture on a collection device to produce a fibrous structure.

* * * * *