US006200120B1

(12) **United States Patent**
Fish et al.

(10) **Patent No.: US 6,200,120 B1**
(45) **Date of Patent: Mar. 13, 2001**

(54) **DIE HEAD ASSEMBLY, APPARATUS, AND PROCESS FOR MELTBLOWING A FIBERFORMING THERMOPLASTIC POLYMER**

(75) Inventors: **Jeffrey E. Fish**, Dacula; **Jark C. Lau**, Roswell; **Bryan D. Haynes**, Cumming, all of GA (US)

(73) Assignee: **Kimberly-Clark Worldwide, Inc.**, Neenah, WI (US)

(*) Notice: Subject to any disclaimer, the term of this patent is extended or adjusted under 35 U.S.C. 154(b) by 0 days.

(21) Appl. No.: **09/001,645**

(22) Filed: **Dec. 31, 1997**

(51) **Int. Cl.**[7] **B29B 7/22**; B29B 7/28

(52) **U.S. Cl.** **425/83.1**; 425/72.2; 425/382.2; 425/464; 264/555

(58) **Field of Search** 425/72.2, 83.1, 425/382.2, 464; 264/555

(56) **References Cited**

U.S. PATENT DOCUMENTS

3,057,009		10/1962	Lipski	425/464
3,268,084		8/1966	Allman et al. .	
3,615,995	*	10/1971	Buntin et al.	156/161
3,684,415	*	8/1972	Buntin et al.	425/71
3,954,361		5/1976	Page	425/72.2
4,167,548		9/1979	Arduini et al.	264/12
4,663,220		5/1987	Wisneski et al.	428/221
4,818,464		4/1989	Lau	264/510
5,017,112		5/1991	Mende et al.	425/72.2
5,160,746		11/1992	Dodge, II et al.	425/7
5,171,512		12/1992	Mende et al.	264/555
5,279,776		1/1994	Shah	264/12
5,476,616		12/1995	Schwarz	264/6

FOREIGN PATENT DOCUMENTS

2823472A	12/1978	(DE) .
2146932A	3/1973	(FR) .

OTHER PUBLICATIONS

PCT Search Report, PCT Application No. PCT/US98/27819, Dated May 21, 1999.

* cited by examiner

Primary Examiner—Elizabeth M. Cole
Assistant Examiner—John J. Guarriello
(74) *Attorney, Agent, or Firm*—Dority & Manning, P.A.

(57) **ABSTRACT**

A die head assembly for meltblowing thermoplastic material comprising a first chamber for receiving a pressurized fluid, a second chamber for receiving a pressurized molten thermoplastic material, the second chamber defining an outlet through which the molten thermoplastic material exits the die head, and a fluid tube removably securable to the first chamber and defining a passageway having an inlet in communication with the first chamber and an outlet extending at least into the outlet of the second chamber.

The die head assembly of claim 1, wherein the outlet of the second chamber defines a longitudinal axis, and the outlet of the second chamber and the outlet of the fluid tube define at least one elongated opening therebetween elongated in a direction extending substantially perpendicular to the longitudinal axis, the molten thermoplastic material passing through the elongated opening as it exits the die head.

25 Claims, 7 Drawing Sheets

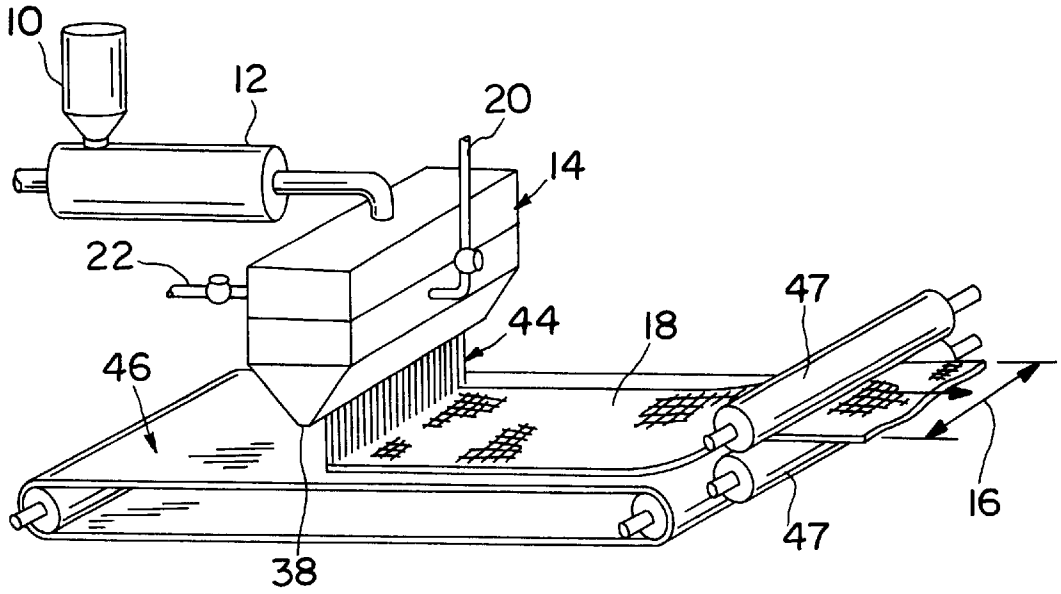

FIG. 1
PRIOR ART

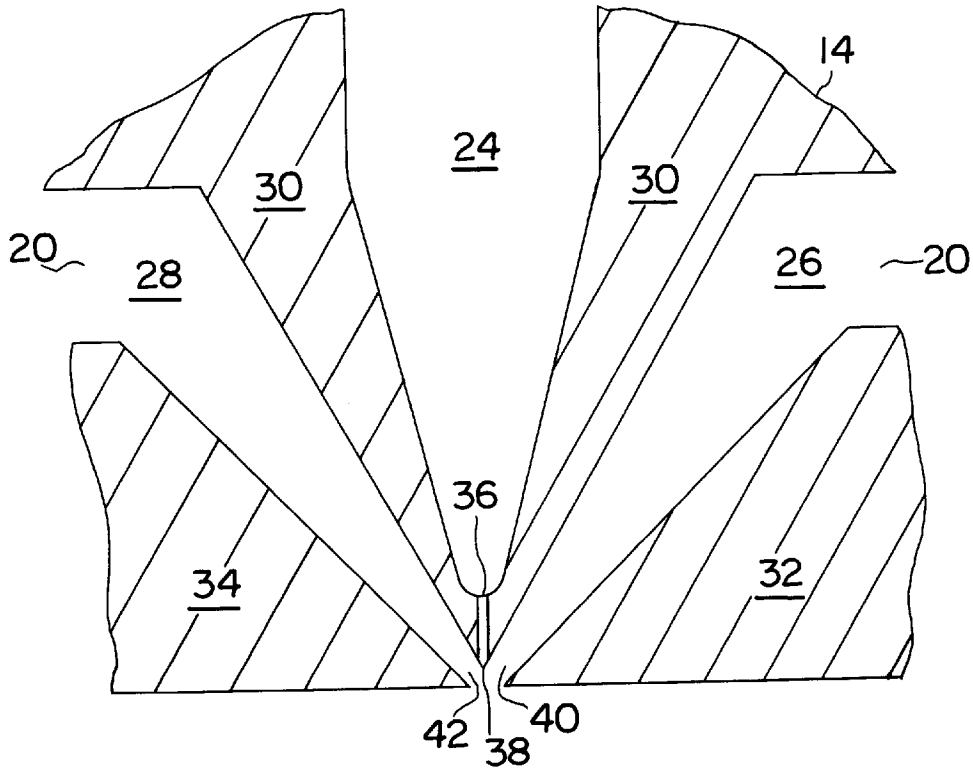

FIG. 2
PRIOR ART

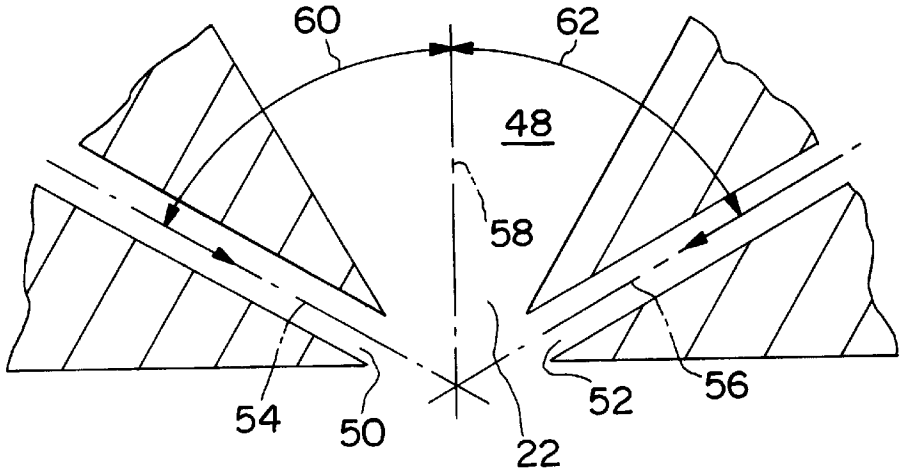

FIG. 3
PRIOR ART

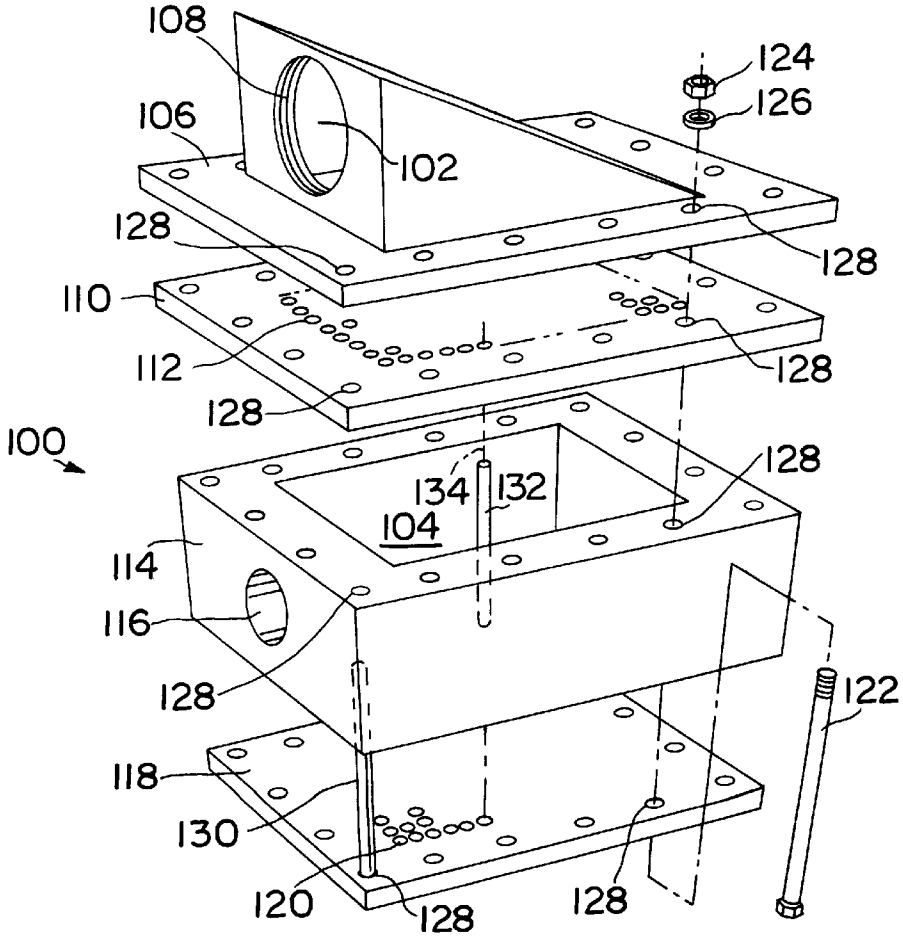

FIG. 4

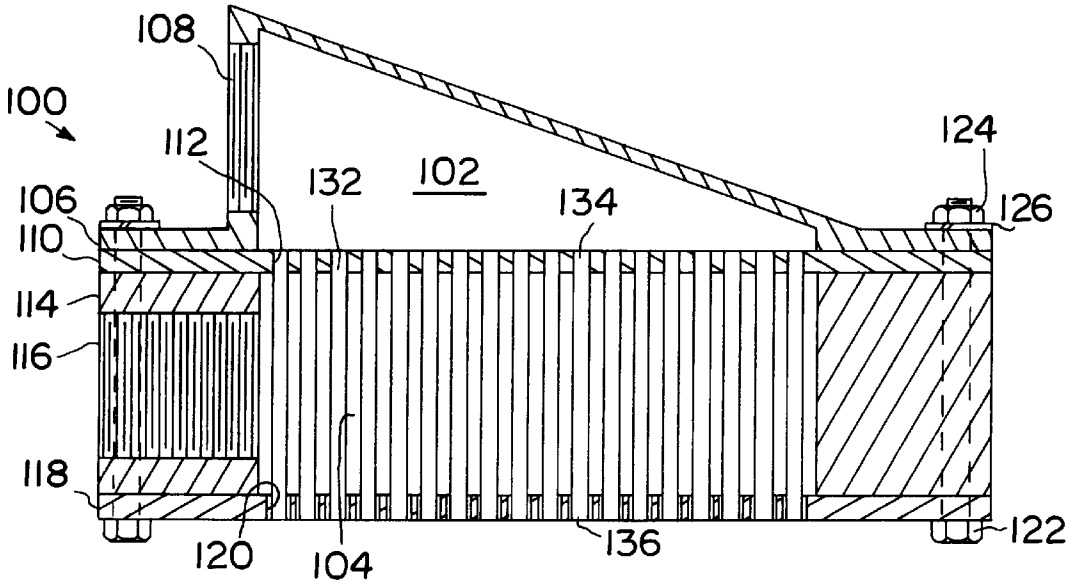

FIG. 5

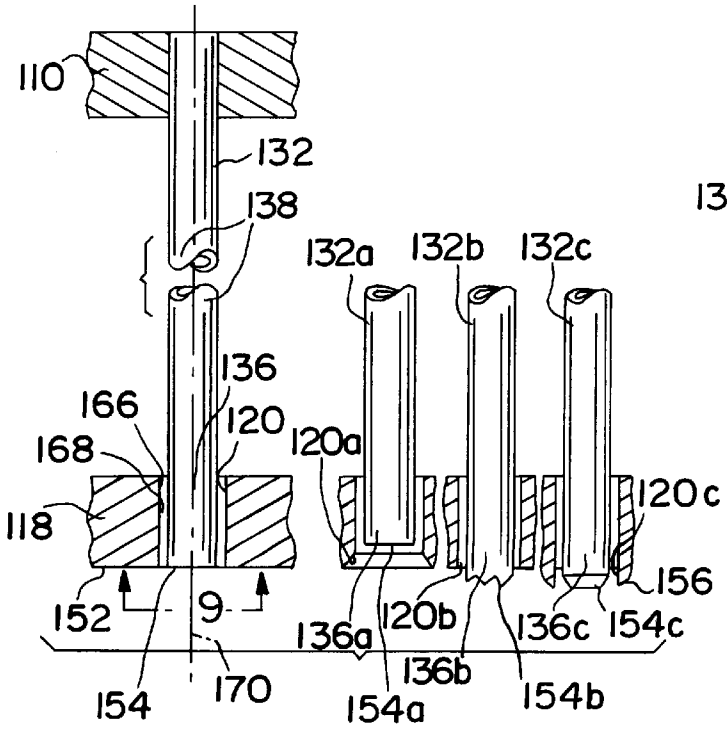

FIG. 6

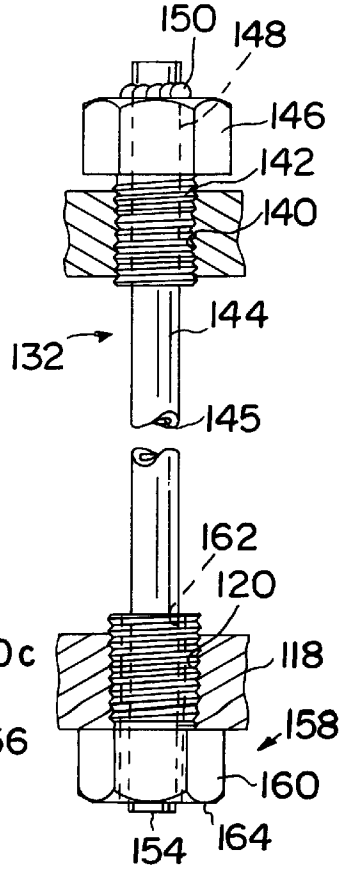

FIG. 7

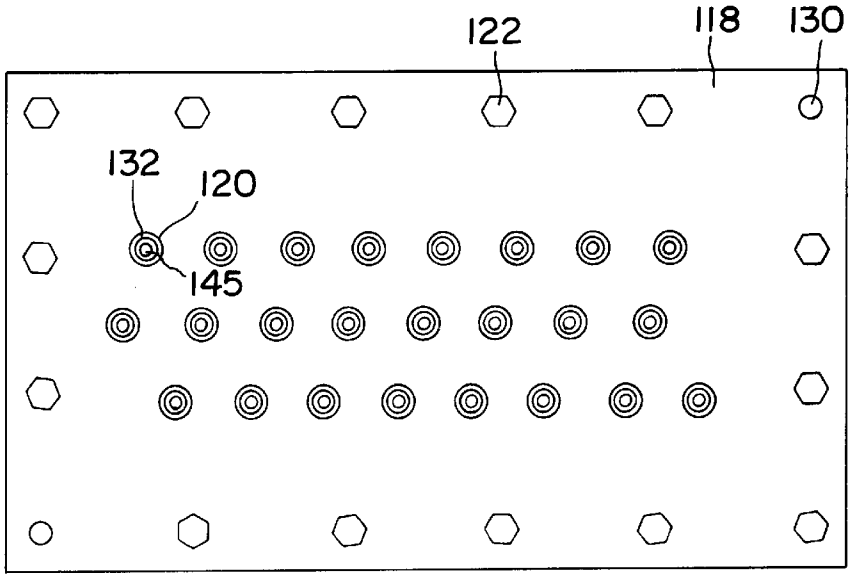

FIG. 8

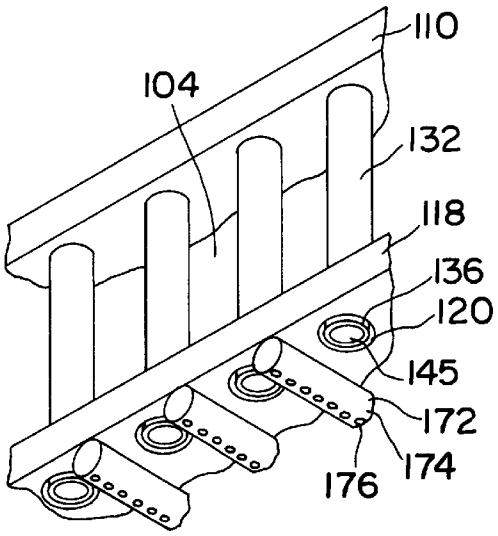

FIG. 10

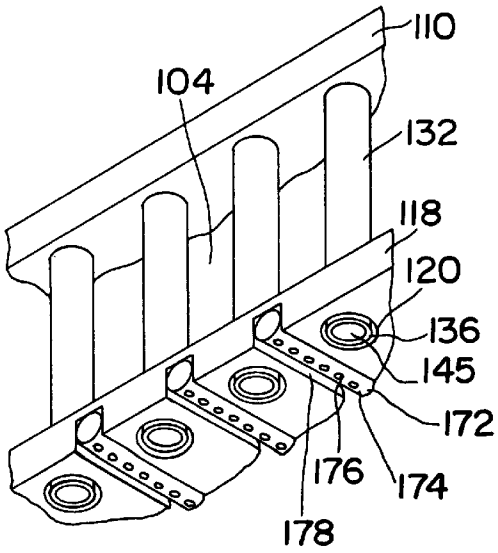

FIG. 11

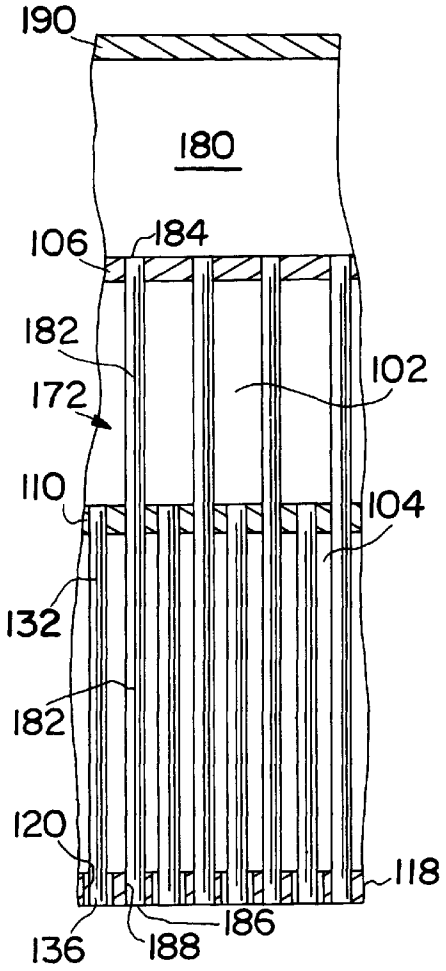

FIG. 12

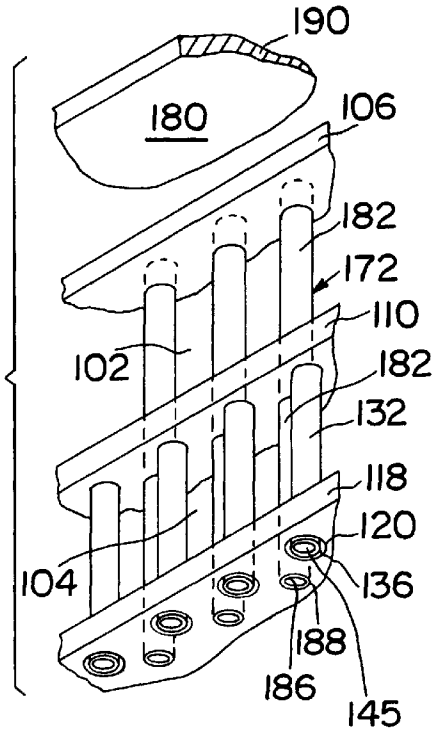

FIG. 13

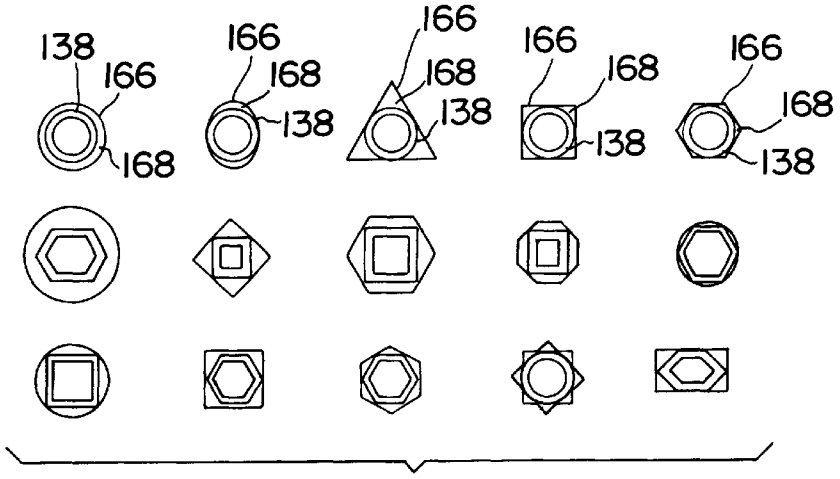

FIG. 9

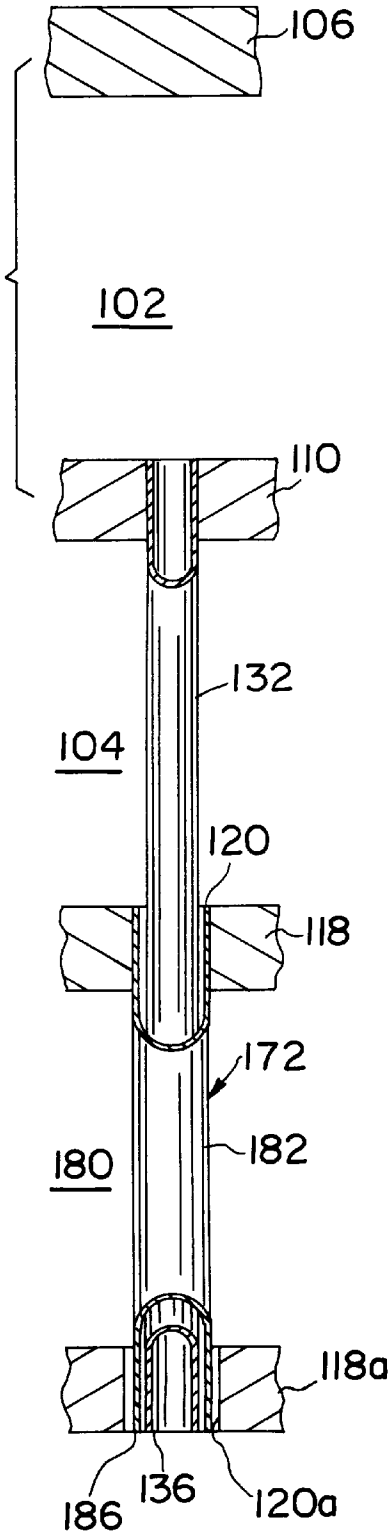
106
102
110
132
104
120
118
172
180
182
118a
186
136
120a

FIG. 14

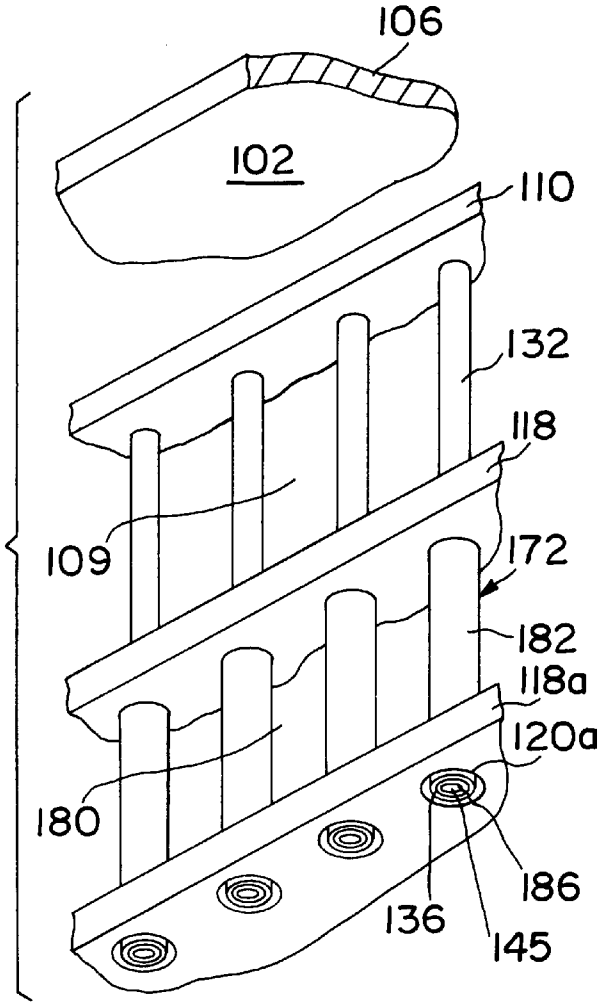
106
102
110
132
118
109
172
182
118a
120a
180
186
136
145

FIG. 15

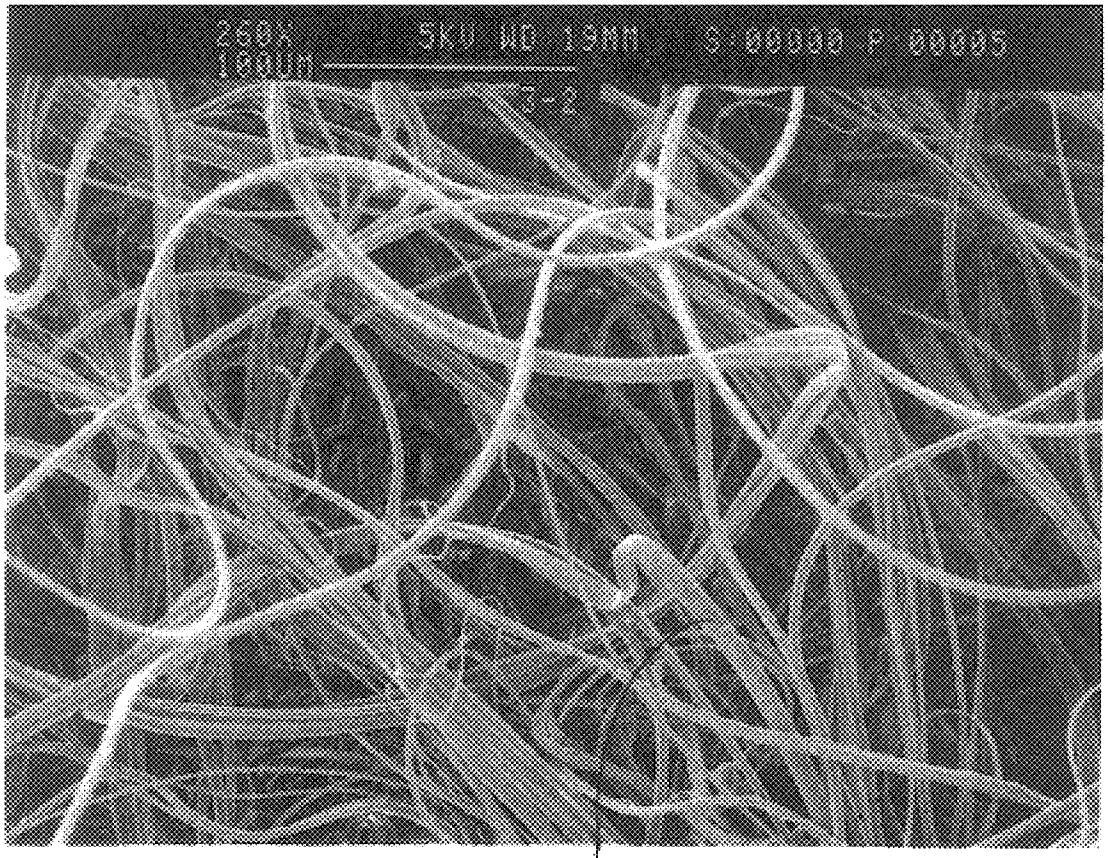

F

FIG. 16

DIE HEAD ASSEMBLY, APPARATUS, AND PROCESS FOR MELTBLOWING A FIBERFORMING THERMOPLASTIC POLYMER

BACKGROUND OF THE INVENTION

The present invention relates to an improved die head assembly, apparatus, and process for meltblowing a thermoplastic polymer to form a fiber and a nonwoven fabric web, and more particularly relates to an improved die head assembly, apparatus, and process for meltblowing a fiber-forming thermoplastic polymer using an air flow through a removably securable passageway that is centrally-located within an extruded polymer flow, or using an extruded polymer flow through an elongated opening, to form meltblown fibers and a nonwoven fabric web.

Meltblowing techniques for forming very small diameter fibers, sometimes referred to as microfibers or meltblown fibers, from thermoplastic resins and polymers are well-known in the art. For example, the production of fibers by meltblowing is described in an article entitled "Superfine Thermoplastic Fibers", appearing in *Industrial and Engineering Chemistry*, Vol. 48, No. 8, pp. 1342–1346. This article describes work done at the Naval Research Laboratories in Washington, D.C. Another publication dealing with meltblowing is *Naval Research Laboratory Report* **111437**, dated Apr. 15, 1954. Generally, meltblowing techniques include heating a thermoplastic fiber-forming resin to a molten state and extruding the molten resin from a die arrangement having a plurality of linearly arranged small diameter capillaries as molten threads. The molten threads exit the die into a high velocity stream of gas, usually air, which is maintained at an elevated temperature, and which serves to attenuate the threads of molten resin to form fibers having a diameter which is less than the diameter of the capillaries of the die arrangement.

A typical apparatus and process for forming a meltblown fabric is shown in FIG. **1**, in which a hopper **10** provides polymer material to an extruder **12** attached to a die **14** which extends across the width **16** of a nonwoven web **18** to be formed by the meltblowing process. Inlets **20** and **22** provide pressurized gas to die **14**. FIG. **2** shows a partial cross-section of a portion of die **14**, including an extrusion slot **24** that receives polymer from extruder **12** and chambers **26** and **28** that receive pressurized gas from inlets **20** and **22**. Chambers **26** and **28** are defined by base portion **30** and plates **32** and **34** of die **14**.

The melted polymer is forced out of slot **24** through a plurality of small diameter capillaries **36** extending across tip **38** of die **14**. Capillaries **36** have a diameter on the order of 0.0145 to 0.0180 in., and are spaced from 9–30 capillaries per inch. The gas passes from chambers **26** and **28** through passageways **40** and **42**. The two streams of gas from passageways **40** and **42** converge to entrain and attenuate molten polymer threads **44** (see FIG. **1**) as they exit capillaries **36** and land on a foraminous surface **46**, such as a belt. The molten material is extruded through capillaries **36** at a rate of from 0.02 to 1.7 grams/capillary/minute at a pressure of up to 300 p.s.i.g. The temperature of the extruded molten material is dependent on the melting point of the material chosen, and is often in the range of 125 to 335° C. The gas may be heated to 100 to 400° C. and pressurized up to 20 p.s.i.g.

The extruded threads **44** form a coherent, i.e. cohesive, fibrous nonwoven web **18** that may be removed by rollers **47**, which may be designed to press web **18** together to improve the integrity of web **18**. Thereafter, web **18** may be transported by conventional arrangement to a wind-up roll, pattern-embossed, etc. U.S. Pat. No. 4,663,220 discloses in greater detail an apparatus and process using the above-described elements, and is incorporated by reference herein.

U.S. Pat. No. 4,818,464, the disclosure which is also incorporated by reference herein, discloses a process and apparatus for meltblowing thermoplastic material using a different type of die head. In this patent, a centrally located gas jet passes through or between an opening or openings for extruding thermoplastic material. FIG. **3** shows a partial sectional view of a die tip as taught in U.S. Pat. No. 4,818,464. As shown, gas inlet **48** and extrusion openings **50** and **52** are arranged such that the longitudinal axes **54** and **56** of openings **50** and **52** are disposed at an angle with longitudinal axis **58** of inlet **48** of about 30 degrees to less than about 90 degrees, and typically about 60 degrees. (See angles **60** and **62**).

While the above devices work well for their intended purposes, they are subject to a few minor drawbacks. For example, the small diameter capillaries used to deliver molten thermoplastic material in the above devices require very precise machining to properly locate and create the capillaries. Thus, die heads with extremely fine capillaries are expensive to create.

Also, the small diameter capillaries may be clogged if, for example, molten thermoplastic material were to char or degrade prior to reaching the capillary, forming a solid particle too large to fit through the capillary. Further, the addition of pigments and other additives, or the presence of impurities, could similarly cause clogging of capillaries. It is a time-consuming and expensive process to halt production of a meltblowing line, remove the partially clogged die head assembly, install a clean die head assembly, and clean the clogged die head assembly capillaries for future use.

Further, the small diameter capillary may require the molten thermoplastic material to be heated to an extremely high temperature in order to ensure a low enough viscosity to allow for smooth flow through the small diameter capillary. Also, a high pressure must be used to ensure the molten thermoplastic material is properly extruded through the small diameter capillaries at a flow rate high enough to justify commercial production. With the higher pressures and temperatures used, the entire apparatus must be larger and the energy usage must be higher. Alternately, a low molecular weight (high meltflow rate) material may be required to achieve a suitable low viscosity. Such low molecular weight polymers are often more expensive than materials than have not been treated to attain these characteristics.

Moreover, due to the small diameter of the capillaries, it is difficult to give the capillary any shape other than a circle. Thus, the shape of the fibers formed from such a die head assembly are limited to those attainable by extrusion through a circular capillary.

Also, typical commercial die head assemblies include one row of capillaries, rather than a large array of rows of capillaries, because of the need to have intimate contact between the primary air and polymer filaments to properly attenuate the filaments. The prior art does not permit the spacing of multiple rows of capillaries adjacent each other. Thus, commercial production is limited to the amount of polymer that can be extruded from a single row of extremely small capillary openings. In order to make commercial production feasible, high polymer velocity must be achieved through each hole, generally leading to larger fibers and/nor harsher webs, which can be undesirable.

OBJECTS AND SUMMARY OF THE INVENTION

It is a principle object of the present invention to provide a die head assembly, apparatus, and process for meltblowing a thermoplastic polymer, and a meltblown fiber and a nonwoven fabric web that are easy and economical to construct, maintain, and run.

Another object of the present invention is to provide a die head assembly that is easier to clean and is less likely to clog than currently-available products.

Still another object of the present invention is to provide a die head assembly, apparatus, and process for meltblowing a thermoplastic polymer to create a nonwoven fabric web having a greater throughput and production rate than currently-available devices and processes.

Yet another object of the present invention is to provide a die head assembly, apparatus, and process using an array of openings for meltblowing a thermoplastic polymer.

Another object of the present invention is to provide a die head assembly and apparatus requiring less precision machining than current die head assemblies and apparatuses.

Still another object of the present invention is to provide a die head assembly, apparatus, and process for meltblowing a thermoplastic polymer, and a meltblown fiber and nonwoven fabric web, wherein the meltblown fiber formed has an elongated cross-section.

To achieve these objects, and in accordance with the purposes of the invention, as embodied and broadly described herein, a die head assembly is provided for meltblowing thermoplastic material comprising a first chamber for receiving a pressurized fluid, and a second chamber for receiving a pressurized molten thermoplastic material, the second chamber defining an outlet through which the molten thermoplastic material exits the die head. A fluid tube is removably securable to the first chamber and defining a passageway having an inlet in communication with the first chamber and an outlet extending at least into the outlet of the second chamber.

The fluid tube outer surfaces and the second chamber outer surface may have any of several possible cross-sectional shapes.

Optionally, the outlet of the second chamber defines a longitudinal axis and the outlet of the fluid tube defines a longitudinal axis coaxial with the second chamber outlet longitudinal axis. Also, the outlet of the second chamber optionally defines a longitudinal axis, and the outlet of the second chamber and the outlet of the fluid tube define at least one elongated opening therebetween elongated in a direction extending substantially perpendicular to the longitudinal axis, the molten thermoplastic material passing through the elongated opening as it exits the die head. As many as four or six elongated openings may be provided.

The outlets may be arranged in a single row or in an array including a plurality of rows.

Optionally, the die head assembly may further include a source of supplemental fluid and a conduit in communication with the supplemental fluid source having an outlet near the second chamber outlet.

The fluid tube may be secured to the first chamber via threads or a press fit.

In accordance with another aspect of the invention, a die head assembly is provided for meltblowing thermoplastic material comprising a first chamber for receiving a pressurized fluid, the first chamber having a wall defining a fluid outlet therethrough, and a second chamber secured to the first chamber for receiving a pressurized molten thermoplastic material, the second chamber defining an outlet through which the molten thermoplastic material exits the die head. A fluid tube is removably securable to the first chamber outlet and defining a passageway having an inlet in communication with the first chamber, an outlet extending at least into the outlet of the second chamber, and a center portion extending through the second chamber.

In accordance with another aspect of the invention, an apparatus is provided for forming a nonwoven web comprising a pressurized fluid supply, a pressurized molten thermoplastic material supply, and a die head for creating meltblown fibers from the molten thermoplastic material. The die head includes a first chamber for receiving the pressurized fluid, a second chamber for receiving the molten thermoplastic material, the second chamber defining an outlet through which the molten thermoplastic material exits the die head, and a fluid tube removably securable to the first chamber and defining a passageway having an inlet in communication with the first chamber and an outlet extending at least into the outlet of the second chamber. A driven foraminous surface collects the meltblown fibers to form the nonwoven web.

In accordance with another aspect of the invention, an apparatus is provided for forming a nonwoven web comprising a pressurized fluid supply, a pressurized molten thermoplastic material supply, and a die head for creating meltblown fibers from the molten thermoplastic material. The die head includes a first chamber for receiving the pressurized fluid, a second chamber for receiving the molten thermoplastic material, the second chamber defining an outlet through which the molten thermoplastic material exits the die head, and a passageway having an inlet in communication with the first chamber and an outlet extending at least into the outlet of the second chamber, the passageway defined by a member including an outer surface, one of the second chamber outlet inner surface and the passageway outer surface including a substantially planar portion opposing the other of the passageway outer surface and the second chamber outlet inner surface so as to form at least one opening elongated in a direction perpendicular to the direction of movement of the molten thermoplastic material as it exits the die head. A driven foraminous surface collects the meltblown fibers to form the nonwoven web.

In accordance with another aspect of the invention, a method is provided for producing fibers from a molten thermoplastic material, the method comprising the steps of extruding the molten thermoplastic material from a material outlet having a longitudinal axis, and producing a stream of pressurized fluid that exits a fluid tube removably securable to a die head assembly and including an outlet coaxial with the material outlet longitudinal axis and extending at least into the material outlet.

In accordance with another aspect of the invention, a fiber is provided having an elongated cross-section formed by the process of extruding the molten thermoplastic material from a material outlet having a longitudinal axis, and producing a stream of pressurized fluid that exits a fluid tube removably securable to a die head assembly and including an outlet coaxial with the material outlet longitudinal axis and extending at least into the material outlet.

In accordance with another aspect of the invention, a nonwoven web is formed by the process of extruding the molten thermoplastic material from a material outlet having a longitudinal axis, producing a stream of pressurized fluid

that exits a fluid tube removably securable to a die head assembly and including an outlet coaxial with the material outlet longitudinal axis and extending at least into the material outlet, and collecting the extruded molten thermoplastic material on a driven foraminous surface.

In accordance with another aspect of the invention, a meltblown fiber is provided having an elongated cross-section.

Additional objects and advantages of the invention will be set forth in part in the following description, or may be obvious from the description, or may be learned through the practice of the invention.

BRIEF DESCRIPTION OF THE DRAWINGS

The present invention will be more fully understood from the following detailed description, taken in conjunction with the accompanying drawings, wherein like reference numerals refer to like parts, and in which:

FIG. **1** is an isometric view of a conventional apparatus for making a nonwoven web;

FIG. **2** is a cross-sectional view of the tip of a conventional die head;

FIG. **3** is a cross-sectional view of the tip of prior art die head;

FIG. **4** is an exploded perspective view of one embodiment of a die head assembly according to the present invention;

FIG. **5** is a cross-sectional view of the die head assembly of FIG. **4**;

FIG. **6** is a partial sectional view showing different possible orientations of fluid tubes within the die head assembly of FIG. **4**;

FIG. **7** is a partial sectional view showing one way to mount a fluid tube in the die head assembly of FIG. **4**;

FIG. **8** is a bottom view of the die head assembly of FIG. **4**;

FIG. **9** is a diagram showing various possible configurations of the fluid tube and molten material outlets for use in the die head assembly of FIG. **4**;

FIG. **10** is a partial perspective view of an alternate embodiment of the die head assembly of FIG. **4** showing one possible arrangement of secondary fluid pipes;

FIG. **11** is a partial perspective view of a variation of the embodiment of FIG. **10** showing a recessed arrangement of secondary fluid pipes;

FIG. **12** is a partial sectional view of a second alternate embodiment of the die head assembly of FIG. **4** showing another possible arrangement of secondary fluid tubes;

FIG. **13** is a partial perspective view of the embodiment of FIG. **12**;

FIG. **14** is a partial sectional view of a third alternate embodiment of the die head assembly of FIG. **4** showing another possible arrangement of secondary fluid tubes;

FIG. **15** is a partial perspective view of the embodiment of FIG. **14**; and

FIG. **16** is a photograph showing an enlarged view of fibers formed according to the present invention.

DETAILED DESCRIPTION OF THE PREFERRED EMBODIMENTS

Reference will now be made in detail to the presently preferred embodiments of the invention, one or more examples of which are illustrated in the drawings. Each example is provided by way of explanation of the invention and not meant as a limitation of the invention. For example, features illustrated or described as part of one embodiment or figure can be used on another embodiment or figure to yield yet another embodiment. It is intended that the present invention include such modifications and variations.

In accordance with the present invention, a first embodiment of a die head assembly for meltblowing thermoplastic material is broadly embodied in FIGS. **4–9**. As shown, die head assembly **100** includes a first chamber **102** for receiving a pressurized fluid and a second chamber **104** for receiving a pressurized molten thermoplastic material. First chamber **102** is defined by an intake plate **106** including a fluid inlet **108** and a dividing plate **110** defining at least one fluid outlet **112**. Second chamber **104** is defined by a material intake plate **114** including a material inlet **116**, a base plate **118** defining at least one material outlet **120**, and dividing plate **110**. Thus, dividing plate **110** forms a common wall of both first chamber **102** and second chamber **104**. However, if desired, dividing plate **110** may be formed of two separate plates, one each for first chamber **102** and second chamber **104**. Plates **106**, **110**, **114**, and **118** may be joined together by bolts **122**, nuts **124**, and washers **126**, as shown. Preferably, holes **128** are provided through each of plates **106**, **110**, **114**, and **118** for receiving bolts **122**, so that die head assembly **100** can be substantially assembled using one set of connectors. If desired, line up pins **130** may be provided through some of holes **128** to ease assembly of plates **106**, **110**, **114**, and **118**. Also, seal members such as gaskets, o-rings, etc. (not shown) may be provided between some or all of plates **106**, **110**, **114**, and **118**, to improve sealing of pressurized fluid and molten material within first and second chambers **102** and **104**.

As shown in FIGS. **4–9**, a plurality of fluid tubes **132** is provided, each having an inlet **134** in communication with first chamber **102** and an outlet **136** extending at least into outlet **120** of second chamber **104**. Each fluid tube **132** has an outer surface **138** that may have various cross-sectional shapes, as will be described below.

Preferably, fluid tubes **132** are removably securable to first chamber **102**. As shown in FIGS. **5** and **6**, fluid tubes **132** may be secured to first chamber **102** by a press fit within fluid outlet holes **102**. Alternately, fluid tubes **132** may be threaded into first chamber **102**. Thus, if desired, as shown in FIG. **7**, holes **102** may include an interior thread **140**, and fluid tubes **132** may include an exterior thread **142**. One way to provide exterior thread **142** is to mount a tube member **144** within a threaded bolt **146** having an internal bore **148**. Tube member **144** defines a passageway **145** connecting inlet **134** and outlet **136**, and may be secured to threaded bolt **146** via a weld **150**. Manufacturing die head assembly **100** with removable fluid tubes **132** allows for easy maintenance and cleaning of the die head assembly, as will be described below.

FIGS. **6** and **7** show various possible orientations of fluid tubes **132** relative to base plate **118** and various possible fluid tube outlet **136** configurations. In each of the embodiments of FIGS. **6** and **7**, fluid tube outlets **136** extend at least into second chamber outlets **120**, but do so in different ways and with different shapes. For example, outlet **136** of fluid tube **132** in FIG. **6** is flush with the exterior surface **152** of base plate **118**, and outlet **136** has a flat and annular edge **154**. Outlet **136*a*** of fluid tube **132*a*** in FIG. **7** is recessed into base plate **118**, and outlet **136*b*** of fluid tube **132*b*** extends from base plate **118**. Outlet **136*a*** has an edge **154*a*** like edge **154**, and outlet **136*b*** has an irregular edge **154*b***. Outlet **136*c*** extends from base plate **118** and includes a bevelled edge

154*c*. Material outlet **120***a* diverges outward, and material outlet **120***c* includes a nozzle **156** extending from base plate **118**. Outlets **136** may extend out of or being extracted into openings **120** on the range of about 0.50 in or less, depending on the processing conditions desired.

As shown in FIG. **7**, an adjustable nozzle **158** may be provided in the form of a bolt **160** threaded into material outlet **120**. Bolt **160** defines a central passageway **162** through which tube member **144** passes and which serves as the material outlet for second chamber **104**. By rotating bolt **160** relative to base plate **118**, the relative spacing of edge **154** of tube member **144** and the edge **164** of bolt **160** can be adjusted to change the degree of extension from or retraction into bolt **160** by fluid tube edge **154**. The relative spacing can alter the types of fibers produced by die head assembly **100**. Also, use of an adjustable and removable nozzle such as bolt **160** makes cleaning die head assembly **100** easier.

As shown best in FIGS. **5–8**, material outlet holes **120** are larger than outer surface **138** of fluid tubes **132**. Thus, the interior surface **166** of material outlet holes **120** and outer surface **138** of fluid tubes **132** form at least one opening **168** (see FIG. **9**) therebetween through which the molten thermoplastic material is extruded. Optionally, the opening or openings **168** may be elongated in a direction that extends perpendicular to the longitudinal axis **170** of fluid tube **132** and material outlet **120** (see FIG. **6**). An "elongated" opening **168** is one that is longer by at least about 50 percent than it is wide (that is, has an aspect ratio of 1.5 or more), when viewed in a plane perpendicular to longitudinal axis **170**. FIG. **9** shows a number of possible configurations of outer surface **138** of fluid tube **132** and inner surface **166** of material outlets **120**, many of which provide a number of elongated openings **168** therebetween. The use of elongated and segmented openings allows for production of fibers having elongated or "flat" cross-sections not possible using prior art circular openings.

Material outlet holes **120**, if round, may have a diameter of from 0.050 to 0.150 in. or more, which is much larger than prior art capillary sizes (0.0145 to 0.0180 in., for example). If square, rectangular, triangular, etc., outlet holes **120** may have sides of as long as 0.20 or 0.25 in. or more. However, much of the outlet holes **120** are filled by fluid tubes **132**, so the molten material does not pass through the entire area of the outlet holes and thus passes between the fluid tubes **132** and the outlet holes **120**. Preferably, a plurality of segmented openings **168** is created between each fluid tube **132** and material outlet **120**, thus creating the effect of a number of smaller holes but not requiring the precise machining of prior art die heads. A typical spacing between surfaces **138** and **166** is on the order of 0.010 to 0.100 in., which is generally larger than most prior art capillaries. If a material outlet hole **120** or a set of openings **168** becomes clogged, it is a relatively simple matter to remove the respective fluid tube **132** and/or bolt **160** for clearing the clog from the larger hole, as compared to prior art die heads where the entire die head often had to be removed for clearing out clogged smaller capillaries.

FIG. **9** shows various examples of different fluid tube **132** and mateiral outlet **120** surface shapes. It should be understood that these examples are not the only configurations possible. Thus, inner surface **166** of material outlets **120** may be round, oval, triangular, square, rectangular, hexagonal, any other sort of polygonal, or irregularly angularly and curvedly shaped. For ease of machining, circular shapes may be desired for material outlets **120**. As an option, plate **118** may be made in two parts per row of outlets **120** with outlets **120** defined between the parts by the interfacing edges of the parts. Such construction would allow for easier machining of noncircular outlet **120** shapes.

The fluid tubes **132** are preferably made of an extruded metal, and thus their shape is limited only by the limitations of the extrusion process. However, fluid tubes could also be drilled fom bar stock or manufactured in any other way if so desired. The inner diameter (or dimension if angular) of fluid tubes **132** is in the range of about 0.030 to 0.150 in., depending, of course, on the size of material openings **120**.

For formation of flat fibers, a hexagonal-shaped fluid tube **132** within a circular opening **120** is preferred. The molten material is stripped off flat surfaces of tube **132** by the fluid during fiber formation. FIG. **16** shows an example of such a flat fiber "F" formed according to the present invention.

Fluid tubes **132** should form a seal with dividing plate **110** so that molten material does not leak into first chamber **102** and so that the fluid does not leak into second chamber **104**. Plates **110** and **118** preferably have a thickness of about 0.250 in. or more depending on the size of the die, so that they securely hold fluid tubes **123** in place and withstand fluid pressures of up to at least 70 p.s.i.g., and molten material pressures of up to 30 p.s.i.g. For safety, a rupture disk (not shown) or some other pressure relief device may be provided on second chamber **104** in case of excessive internal pressure.

The molten material is extruded through a hole of larger diameter than a typical capillary tube. This fact allows for a lowering of the pressure required to properly extrude the molten material to the range of 2 to 20 p.s.i.g. from the prior art range of up to 500 p.s.i.g., thereby providing energy and manufacturing savings due to the reduced scale of certain parts.

Also, the molten material may be able to be extruded at temperatures lower than prior temperatures. The use of lower temperatures beneficially reduces or avoides degradation of polymer during processing. Again, various cost savings result from being able to reduce the temperature of the extruded molten material.

Further, the use of larger material openings **120** allows more molten material to be extruded per linear unit of die head, resulting in a greater throughput rate than for prior art die head assemblies. Moreover, the present invention allows for use of an array of outlets **120**, as shown in FIG. **8**, rather than a single row of outlets, as in conventional die heads, thereby substantially increasing throughput.

In this regard, applicants believe that it is not necessary for fluid to create suction to draw the molten material out of the die head and attenuate it, as has been previously stated in the art. Rather, the fluid exiting fluid tubes **132** may serve to strip molten material from the sides of the fluid tubes, rather than to draw the molten material out of the tubes. Stated another way, the fluid entrains the molten material once extruded, but does not draw it out of the tubes. Turbulence downstream of the fluid tubes breaks up and distributes the molten material in fiber form to form the web. As will be described below, a source or sources of secondary air to aid in the entrainment process may be provided.

Preferably, the fluid and molten thermoplastic material are heated prior to entry into die head assembly **100** by conventional means. Also, heating units (not shown) may be embedded within portions of die head assembly **100** such as within plate **114** to maintain system temperatures. Any type of commonly-used thermoplastic materials or combinations of materials may be processed with die head assembly **100**, such as, but not limited to, polyolefins or elastomers. The

fluid used is preferably air or some other gas, although it is possible that a liquid such as water could also be used within the scope of the invention.

The table below lists a number of examples of operating conditions (not necessarily optimized or preferred operating conditions), both for manufacturing fibers according to the present invention and using a typical prior art meltblowing diehead. Polypropylene was the polymer used in all four examples.

	Fluid Temp F.	Fluid Pressure psig	Polymer Temp F.	Polymer Pressure psig
High Throughput	680	50	480	2
Low Throughput 1	630	50	460	2
Low Throughput 2	500	60	400	20
Conventional	500	10	460	200

A high throughput, a first low throughput and a second low throughput example are provided in the table. The high throughput example and the low throughout 1 example utilize a circular opening **120** and a hexagonal tube member **132**, where the tube member did not contact the opening. The low throughput 2 example utilizes a circular opening **120** with a hexagonal tube member **132**, where the tube member did contact opening **120** at its corners. For the high throughput example, tube member **132** stuck out of outlet **120** about 0.25 in., for the low throughput 2 example, tube member **132** was recessed within outlet **120** about 0.030 in., and for the low throughput 1 example, tube member **132** was flush with outlet **120**. The conventional example is for a diehead having a single row of circular capillaries.

As indicated, the pressure required to extrude the molten material according to the present invention is much lower than conventional pressures, due to the fact that the holes through which the material is extruded are generally larger in cross section. It is possible that the molten material temperature could be reduced in some situations as compared to conventional processes by use of the present invention. The fluid pressure required by the present invention is greater than that of typical prior art diehead assemblies due to the configuration of the fluid tubes **132** as compared to chambers **26** and **28** (as shown in FIG. **2**). However, because the area of fluid outlet is smaller, the total volume of air required is not necessarily higher than for conventional designs. The fluid temperature required with the present invention may be higher than that of the conventional devices.

As an option, in order to ensure proper throughput from a plurality of openings **120**, a source of supplemental fluid may be provided to assist in the entrainment of the molten material as it exits outlets **120**. The supplemental fluid source may comprise inlets such as inlets **20** and **22**, as shown in FIG. **1**, for receiving pressurized fluid. As broadly depicted in FIG. **10**, a source of supplemental fluid may include a conduit **172** comprising a supplemental fluid pipe **174** extending across base plate **118** adjacent outlets **120**. Supplemental fluid pipe **174** includes outlets **176** for providing supplemental fluid to the stream of molten thermoplastic material. Outlets **176** may be holes, slots, or any other shape. As shown in FIG. **11**, fluid pipes **174** may optionally be recessed within channels **178** formed in base plate **118**. If provided, supplemental fluid may have a pressure in the range of 10 to 40 p.s.i.g. The supplemental fluid may or may not be heated.

Alternately, as shown in FIGS. **12** and **13**, the source of supplemental fluid may include a third chamber **180** defined by wall **190** and disposed adjacent chamber **102**. Conduit **172** in this embodiment includes at least one supplemental fluid tube **182** having an inlet **184** in communication with third chamber **180** and an outlet **186** near second chamber outlet **120**. As shown in FIG. **13**, outlet **186** of supplemental tubes **182** are disposed in holes **188** no larger than outlets **186**. Therefore, no molten thermoplastic material passes around supplemental fluid tubes **182**, as occurs around primary fluid tubes **132**.

FIGS. **14** and **15** show an alternate arrangement of supplemental fluid tubes **182** (generally, conduits **172**) in which third chamber **180** defined by wall **118*a*** is disposed adjacent second chamber **104**. Supplemental fluid tube **182** carries molten thermoplastic material through its interior and allows supplemental fluid to pass around its exterior. Thus, the arrangement of FIGS. **14** and **15** provides a central, primary fluid flow, a surrounding molten thermoplastic material flow, and a further surrounding supplemental fluid flow. Thus, outlet **120*a*** must be large enough to accommodate the two coaxially located tubes **132** and **182**. Also, the varying cross-sectional arrangements shown in FIG. **9** may be provided between tubes **132** and **182**. Therefore, changing the cross sectional shapes of the tubes changes the cross sectional output shape of the molten thermoplastic material.

It will be apparent to those skilled in the art that various modifications and variations can be made in the present invention without departing from the scope and spirit of the invention. It is intended that the present invention include such modifications and variations as come within the scope of the appended claims and their equivalents.

We claim:

1. A die head assembly for meltblowing thermoplastic material comprising:

a first chamber for receiving a pressurized fluid;

a second chamber for receiving a pressurized molten thermoplastic material, the second chamber defining an outlet through which the molten thermoplastic material exits the die head; and

a fluid tube removably securable to the first chamber and defining a passageway having an inlet in communication with the first chamber and an outlet extending at least into the outlet of the second chamber.

2. The die head assembly of claim **1**, wherein the fluid tube includes an outer surface having a portion adjacent the fluid tube outlet with a substantially circular outer perimeter.

3. The die head assembly of claim **1**, wherein the fluid tube includes an outer surface having a portion adjacent the fluid tube outlet with a substantially curved outer perimeter.

4. The die head assembly of claim **1**, wherein the fluid tube includes an outer surface having a portion adjacent the fluid tube outlet with a substantially polygonal outer perimeter.

5. The die head assembly of claim **1**, wherein the second chamber outlet includes a substantially circular inner surface.

6. The die head assembly of claim **1**, wherein the second chamber outlet includes a substantially curved inner surface.

7. The die head assembly of claim **1**, wherein the second chamber outlet includes a substantially polygonal inner surface.

8. The die head assembly of claim **1**, wherein the second chamber outlet includes a substantially irregular inner surface.

9. The die head assembly of claim **1**, wherein the outlet of the second chamber defines a longitudinal axis and the outlet of the fluid tube defines a longitudinal axis coaxial with the second chamber outlet longitudinal axis.

10. The die head assembly of claim **1**, wherein the outlet of the second chamber defines a longitudinal axis, and the outlet of the second chamber and the outlet of the fluid tube define at least one elongated opening therebetween elongated in a direction extending substantially perpendicular to the longitudinal axis, the molten thermoplastic material passing through the elongated opening as it exits the die head.

11. The die head assembly of claim **10**, wherein at least four of the elongated openings are defined between the outlet of the second chamber and the outlet of the fluid tube.

12. The die head assembly of claim **10**, wherein at least six of the elongated openings are defined between the outlet of the second chamber and the outlet of the fluid tube.

13. The die head assembly of claim **1**, wherein the second chamber outlet includes a nozzle.

14. The die head assembly of claim **1**, wherein the second chamber outlet includes a plurality of outlets, the die head assembly further including a plurality of the fluid tubes, each of the fluid tubes extending at least into a respective one of the outlets.

15. The die head assembly of claim **14**, wherein the outlets are arranged in a single row.

16. The die head assembly of claim **14**, wherein the outlets are arranged in an array including a plurality of rows.

17. The die head assembly of claim **1**, further including a source of supplemental fluid and a conduit in communication with the supplemental fluid source having an outlet near the second chamber outlet.

18. The die head assembly of claim **17**, wherein the source of supplemental fluid includes a third chamber and the conduit includes at least one supplemental fluid tube having an inlet in communication with the third chamber and an outlet near the second chamber outlet.

19. The die head assembly of claim **17**, wherein the conduit includes at least one supplemental fluid pipe extending across a wall portion of the second chamber adjacent the second chamber outlet.

20. The die head assembly of claim **19**, wherein the secondary air pipe is at least partially recessed into the wall portion of the second chamber.

21. The die head assembly of claim **1**, wherein the first chamber defines a fluid outlet having an interior thread, and the fluid tube includes an exterior thread adjacent the fluid tube inlet, the fluid tube being secured to the first chamber via the threads.

22. The die head assembly of claim **1**, wherein the first chamber defines a fluid outlet and the fluid tube is press fit into the fluid outlet.

23. A die head assembly for meltblowing thermoplastic material comprising:

a first chamber for receiving a pressurized fluid, the first chamber having a wall defining a fluid outlet therethrough;

a second chamber secured to the first chamber for receiving a pressurized molten thermoplastic material, the second chamber defining an outlet through which the molten thermoplastic material exits the die head; and

a fluid tube removably securable to the first chamber outlet and defining a passageway having an inlet in communication with the first chamber, an outlet extending at least into the outlet of the second chamber, and a center portion extending through the second chamber.

24. An apparatus for forming a nonwoven web comprising:

a pressurized fluid supply;

a pressurized molten thermoplastic material supply;

a die head for creating meltblown fibers from the molten thermoplastic material and including a first chamber for receiving the pressurized fluid, a second chamber for receiving the molten thermoplastic material, the second chamber defining an outlet through which the molten thermoplastic material exits the die head, and a fluid tube removably securable to the first chamber and defining a passageway having an inlet in communication with the first chamber and an outlet extending at least into the outlet of the second chamber; and

a driven foraminous surface for collecting the meltblown fibers to form the nonwoven web.

25. An apparatus for forming a nonwoven web comprising:

a pressurized fluid supply;

a pressurized molten thermoplastic material supply;

a die head for creating meltblown fibers from the molten thermoplastic material and including a first chamber for receiving the pressurized fluid, a second chamber for receiving the molten thermoplastic material, the second chamber defining an outlet through which the molten thermoplastic material exits the die head, and a passageway having an inlet in communication with the first chamber and an outlet extending at least into the outlet of the second chamber, the passageway defined by a member including an outer surface, one of the second chamber outlet inner surface and the passageway outer surface including a substantially planar portion opposing the other of the passageway outer surface and the second chamber outlet inner surface so as to form at least one opening elongated in a direction perpendicular to the direction of movement of the molten thermoplastic material as it exits the die head; and

a driven foraminous surface for collecting the meltblown fibers to form the nonwoven web.

* * * * *