TEXAS INSTRUMENTS

TMS370 Microcontroller Family

Application Book

1996 *8-Bit Microcontroller Family*

PETITIONER ECOBEE
EX. 1010

Printed in U.S.A., February 1996

SPNA017

PETITIONER ECOBEE
EX. 1010

Application Book

TMS370 Microcontroller Family

1996

PETITIONER ECOBEE
EX. 1010

TMS370 Microcontroller Family Application Book

Microcontroller Products—Semiconductor Group

SPNA017
February 1996

TEXAS INSTRUMENTS

PETITIONER ECOBEE
EX. 1010

IMPORTANT NOTICE

Texas Instruments (TI) reserves the right to make changes to its products or to discontinue any semiconductor product or service without notice, and advises its customers to obtain the latest version of relevant information to verify, before placing orders, that the information being relied on is current.

TI warrants performance of its semiconductor products and related software to the specifications applicable at the time of sale in accordance with TI's standard warranty. Testing and other quality control techniques are utilized to the extent TI deems necessary to support this warranty. Specific testing of all parameters of each device is not necessarily performed, except those mandated by government requirements.

Certain applications using semiconductor products may involve potential risks of death, personal injury, or severe property or environmental damage ("Critical Applications").

TI SEMICONDUCTOR PRODUCTS ARE NOT DESIGNED, INTENDED, AUTHORIZED, OR WARRANTED TO BE SUITABLE FOR USE IN LIFE-SUPPORT APPLICATIONS, DEVICES OR SYSTEMS OR OTHER CRITICAL APPLICATIONS.

Inclusion of TI products in such applications is understood to be fully at the risk of the customer. Use of TI products in such applications requires the written approval of an appropriate TI officer. Questions concerning potential risk applications should be directed to TI through a local SC sales office.

In order to minimize risks associated with the customer's applications, adequate design and operating safeguards should be provided by the customer to minimize inherent or procedural hazards.

TI assumes no liability for applications assistance, customer product design, software performance, or infringement of patents or services described herein. Nor does TI warrant or represent that any license, either express or implied, is granted under any patent right, copyright, mask work right, or other intellectual property right of TI covering or relating to any combination, machine, or process in which such semiconductor products or services might be or are used.

Copyright © 1996, Texas Instruments Incorporated

PETITIONER ECOBEE
EX. 1010

Contents

Part I: Introduction

Introduction **5**
Overview 5
Typical Applications 5

Part II: Software Routines

Arithmetic

16×16 (32-Bit) Multiplication **9**
Binary Division With the TMS370 . . . . . **13**
Divide 16-Bit Number by 8-Bit Number 15
Divide 16-Bit Number by 16-Bit Number 16
BCD-to-Binary Conversion on the TMS370 . . . . . **17**
Binary-to-BCD Conversion on the TMS370 . . . . . **21**
BCD String Addition With the TMS370 . . . . . **25**
TMS370 Floating Point Package **29**
Introduction 31
Floating Point Format 32
Floating Point Routines 33
Floating Point Addition/Subtraction 33
Floating Point Number Comparison 37
Floating Point Division 39
Floating Point Multiplication 43
Floating Point Increment / Decrement 46
Floating Point Number Test 49
Floating Point Number Negation 50
Floating Point To Signed 8-Bit Integer Conversion 51
Floating Point To Signed Long (16-Bit) Integer Conversion 53
Floating Point To Unsigned 8-Bit Integer Conversion 55
Floating Point To Unsigned Long (16-Bit) Integer Conversion 56
Signed 8-Bit Integer To Floating Point Conversion 57
Signed Long (16-Bit) Integer To Floating Point Conversion Comparison 58
Unsigned Long (16-bit) Integer To Floating Point Conversion 59
Unsigned 8-Bit Integer To Floating Point Conversion 60

Memory Operations

Clear RAM Routine **63**
RAM Self-Test Routine **67**
ROM Checksum on the TMS370 . . . . . **71**

PETITIONER ECOBEE
EX. 1010

Table Search With the TMS370 75
Bubble Sort With the TMS370 79

Specific Functionality

Routine to Read a 16-Key Keyboard 85
DTMF Generation With the TMS370 89
System Integrity Check for the TMS370 95

Part III: Module Specific Application Design Aids

RESET Operations

Reset: Explanation of Operation and Suggested Designs 101
COLD START 103
OSC FLT FLAG 103
WD OVRFL INT FLAG 103
General Operation 103

SPI and SCI Modules

Using the TMS370 SPI and SCI Modules 107
Introduction 109
Module Description: Serial Peripheral Interface (SPI) 110
The SPI – How It Works 110
SPI Operating Modes 111
The Master Mode 111
The Slave Mode 111
Configuring the SPI 112
SPI Data Format − Transmitting and Receiving 112
The SPICLK and Data Transfer Rate 113
Controlling the SPI through Interrupts and Flag Checking 114
The TALK Bit and Multiprocessor Communications 115
Considerations When Using the SPI 115
Data Integrity and the SPI 116
SPI Module Software Examples 117
Common Equates 117
Master SPI Configuration 118
Slave SPI Configuration 119
Dynamic Bit Justification 120
Address Recognition by SPI 121
Routine 121
SPI Module Specific Applications 122
Vacuum Fluorescent Display Driver 122
Use SPI to Transmit Data to Serial Shift Register 122
Bootstrap Loader 131
Reprogram Data or Program Memory through SPI Port 131
DSP Controller 132
Interface TMS370 SPI to TMS320C25 DSP 132
SCI Module Description 140

PETITIONER ECOBEE
EX. 1010

The SCI – How It Works 140
Choosing SCI Protocols and Formats 141
The SCI SW RESET Bit 142
Operating Modes of the SCI 143
Setting the SCICLK Pins and Baud Rate 144
SCI Receiver Operation 145
SCI Transmitter Operation 147
SCI Interrupts and Flags 149
Multiprocessor Communications 150
Using the SLEEP Bit 150
Using the TXWAKE Bit 151
Disabling the SCI Transmitter 151
Choosing the Right Protocol 151
Timing the Flow of Data 152
Transmitting 152
Receiving 152
Detecting Transmission Errors 152
What to Do With Transmission Errors 153
SCI Module Software Examples 154
Common Equates 154
SLEEP Bit – Multiprocessing Control 155
Routine 155
System Controller Configuration 156
Routine 156
Nine-Bit Data Protocol 157
Routine 157
HALT Mode Wakeup Using the SCI Receiver 158
Routine 158
SCI Module Specific Applications 159
RS-232-C Interface 159
Interface TMS370C050 to RS-232-C Connection 159
SCI Module Specific Applications 160
Routine 161
Dumb-Terminal Driver 164
Use TMS370C050 SCI to Interface to Dumb-Terminal 164
Routine 165
Low Power Remote Data Acquisition 172
Use TMS370CO50 in STANDBY Mode with SCIRX Wake-Up Procedure 172
Appendix A: SPI Control Registers 178
Appendix B: SCI Control Registers 179
Appendix C 180
TMS0170 Specifications 180
Key Features 180
Functional Description 181
Architecture 181
Shift Register 182
Interface 182
Electrical Specifications 184
Glossary 185
References 187

PETITIONER ECOBEE
EX. 1010

Fast Method to Determine Parity **189**
Automatic Baud Rate Calculation **193**
SPI Port Interfacing 195
SCI Control Registers 196
Automatic Baud Rate Calculation 196
Automatic Baud Rate Routine 196
Possible Improvements 198

Timer and Watchdog Modules

Using the TMS370 Timer Modules **201**
Introduction 203
Module Description 204
Timer 1 (T1) 204
Prescaler/Clock Source 205
T1 Counter 206
Watchdog (WD) 207
T1 Interrupts 207
T1 I/O Pins 209
T1 Operational Modes 210
T2 212
T2 Counter 212
T2 Interrupts 212
T2 I/O Pins 213
T2 Operational Modes 214
Timer Formulas 216
Timer 1: T1 and WD Counter Overflow 216
T1: Compare Register Formula 217
Timer 2: T2 Counter Overflow 218
Timer 2: Compare Register Formula 219
Timer Application Software Routine Examples 220
Real-Time System Control: Periodic Interrupt of T1 221
Output Pulse Width Generation: 1-kHz Square Wave 223
Pulse Width Modulation #1 225
Pulse Width Modulation #2 227
Pulse Position Modulation (PPM) 229
Pulse Width Measurement Using Pulse Accumulation Clock Source 231
Counting External Pulses Relative to an External Signal 233
Output Pulse Drive Referenced to Input Signal: TRIAC Controller or One Shot 235
Pulse Width Measurement: Time Between Edges 236
Output Pulse Generation (Delayed) Referenced to Input Signal 238
Watchdog Operation and Initialization 240
Watchdog Initialization Example 240
WD Reset Enable Initialization #1 243
Watchdog Reset Enable Initialization #2 244
WD Initialization When System Reset is Not Desired 246
Specific Applications 247
Stepper Motor Control 247
Time-of-Day Clock Application Routine 254
Optional Calendar Functions for the Time-of-Day (TOD) Clock 258
Frequency Counter Application 260

PETITIONER ECOBEE
EX. 1010

Display Dimming Application Routine 263
Speedometer and Tachometer Display Application 270
Digital Instrumentation Cluster Software Example 274
Conclusion 283
Appendix A: Timer 1 (T1) Control Registers 284
Appendix B: Timer 2 (T2) Control Registers 287
References 291
Glossary 292

Using Input Capture Pins as External Interrupts 295
Introduction 297
Timer 1 297
Timer 2A 297
Timer 2B 298

Watchdog Design Considerations and Mask Options 299
Introduction 301
Standard Watchdog 301
Hard Watchdog Mask Option 301
Simple Counter 302

T1PWM Set-Up Routines 305

Analog-to-Digital Module

Using the TMS370 ADC1 Module 311
Introduction 313
Module Description 313
Principles of Operation 315
Functional Description 316
Design Considerations 316
A/D Input Pin Model 316
Analog Input Pin Connection 317
Analog Input Conditioning 319
Resolution 322
Ratiometric Conversion 324
Sampling Frequency 324
Analog Reference and Layout Considerations 325
Software Routines 328
Common Equates 328
Single Channel Continuous Conversion 328
Multiple Channel Conversions 331
Application Examples 334
Data Translation 335
Temperature Sensor Interface 337
Automatic Ranging Interface 338
Interfacing a Serial A/D Converter with TMS370 Family Microcontrollers 343
Using On-Chip SPI 343
Using Software to Interface With a Serial A/D Converter 349
Conclusions 355
Appendix A: ADC1 Control Registers 356

PETITIONER ECOBEE
EX. 1010

Appendix B: A/D Errors . . . 357
Appendix C: External A/D Converters . . . 358
Appendix D: A/D Testing . . . 362
Glossary . . . 366
References . . . 367

Analog-to-Digital (A/D) Helpful Hints . . . 369

Analog-to-Digital V_{CC} and V_{SS} Pins: . . . 371
Power Down Operation . . . 371
A/D Reference Options . . . 371
A/D Source Impedence . . . 371
Example : Typical A/D Input Selection and Conversion Process . . . 372

PACT Module

PACT Command Macros . . . 377

PACT Command Macros . . . 379
Macro Definitions . . . 379

PACT Module Sample Routines . . . 385

Introduction . . . 387
Register Equates . . . 387
Using The Hardware Default Timer . . . 388
Square Wave PWM On OP1 . . . 388
PACT Global Initialization . . . 388
Command/Definition (CMD/DEF) Initialization . . . 389
PWM With Period and Duty Cycle Change . . . 391
PACT Peripheral Initialization . . . 391
PACT Command/Definition Initialization . . . 391
Virtual Timer PWM . . . 394
Pulse Width Modulation Example 1 . . . 394
Pulse Width Modulation Example 2 . . . 398
Synchronized Pulses On External Event . . . 403
PWM Generation On Each Event . . . 403
PWM Generation On Selected Event . . . 408
Pulse Width Measurement (PWM) . . . 413
Using Dedicated 32-Bit Capture Registers . . . 413
Using The Circular Buffer Registers . . . 417
Using PACT Step Mode . . . 422
Programming The PACT SCI . . . 426
PACT Command/Definition Initialization: . . . 426
Appendix . . . 429
PACT Input Capture Structure . . . 430
Command And Definition Area . . . 431
Virtual Timer Definition . . . 431
SCI Baud Rate Timer Definition . . . 432
Offset Timer Definition - Time From Last Event . . . 433
Standard Compare Command . . . 434
Conditional Compare Command . . . 435
Double Event Compare Command . . . 436
PACT Control Registers . . . 437
Interrupt Vector Sources . . . 438

PETITIONER ECOBEE
EX. 1010

I/O Pins

Proper Termination of Unused I/O Pins **441**
Introduction 443
What to Do: Best Solution 443
What to Do: Alternative Solutions 445
Summary 447

Part IV: EEPROM Programming

EEPROM Self Programming

EEPROM Self Programming With the TMS370 Family **451**
Programming With the TMS370 Family 453
Write Data EEPROM Routine 453
PROGRAM Routine 453
EEPROG Routine 454
PROGRAM Routine (provides actual values at each step) 454

Bootstrap Programs

Bootstrap Program for the TMS370 . . . . . **459**
Bootstrap Program for the SPI in Slave Mode **463**
Bootstrap Program for the TMS370 in Master **467**

Part V: External Memory Expansion Examples

Using Memory Expansion in Microcomputer Mode With Internal Memory Disabled **475**
Introduction 477
Special Features 477

Interfacing and Accessing External Memory **479**
Microcomputer Interface Example 481
Read Cycle Timing 484
Valid Address-to-Data Read Time Requirement 484
Chip-Select Low-to-Data Read Requirements 485
Chip-Select High-to-Next Data Bus Drive Requirements 486
Read Data Hold After Chip Select High Requirements 487
Write Cycle Timing 488
Write Data Set-Up Time Requirements 488
Data Hold After Chip-Select High 488
Design Options 489
Lower Cost 489
Faster Speed 489
Bank Switching Examples 490
Equates for Examples 491
Coding 492
Initializing to EPROM/RAM Bank 1 492
Changing to EPROM Bank 2 493
Changing to EPROM Bank 3 and RAM Bank 2 493
Changing RAM Banks 493

PETITIONER ECOBEE
EX. 1010

Read/Write Serial EEPROM Data on the TMS370 495

Part VI: Specific System Application Design Aids

EMI Reduction

PCB Design Guidelines for Reduced EMI 505
Overview 507
Background and Theory 507
EMI Sources, Paths, and Receivers 507
Loops and Antennas 508
Loop Areas 508
The Loop: Current Flow Path 509
Differential Mode and Common Mode Radiation 510
Differential-mode Noise 510
Common-mode Noise 510
Coupling 511
High-frequency Characteristics of Passive Devices 512
Reciprocity of Emissions and Susceptibility 512
PCB Design Implementation 513
Floor-Plan PCB First 513
Board Zoning 513
Space for Ground Structures 514
Minimize Routing Distances 514
Short Routes for High-frequency Signals 514
Grounding 514
Digital: Grid the Ground 515
Analog Ground 518
Noisy Ground 518
Low Impedance Ground Node 519
Ground Width 519
Connector Grounds 519
Power Routing 519
Clock Lines 520
Multi-layer Boards 520
Bypassing 522
Power Bypassing: VCC/VSS, VCC3/VSS3 522
Signal Bypassing 522
Connector Bypassing 522
Summary 523
Priority of Guidelines 523
References 523

Cost Effective Input Protection Circuitry for the Texas Instruments TMS370 Family of Microcontrollers

Cost Effective Input Protection Circuitry for the Texas Instruments TMS370 Family of Microcontrollers 527
Introduction 529
Advantages of TTL Specified Input Pins 529
Designing With Competitors CMOS Specified Level Inputs 532
Designing With TI's TTL Level CMOS Inputs 534

PETITIONER ECOBEE
EX. 1010

Advantages of Internal Diode Protection Circuitry 535
Designing Input Protection Circuitry for TMS370 Microcontrollers 537
Calculation of External Current Limiting Resistor Value Example 539
Cost Analysis 542
Conclusion 545
References 546

PETITIONER ECOBEE
EX. 1010

List of Illustrations

Binary Division With the TMS370 13
1. Before and After Register Values for 16/8 Divide 15
2. Before and After Register Values for 16/16 Divide 16

Routine to Read a 16-Key Keyboard 85
1. Keyboard Scan Connections to Port D 87

Reset: Explanation of Operation and Suggested Designs 101
1. Typical Reset Circuit 104

Using the TMS370 SPI and SCI Modules 107
1. SPI Block Diagram 110
2. Master / Slave Connection 112
3. Vacuum Florescent Interface 123
4. Flowchart of Bootstrap Loader Interrupt Service Routine 131
5. TMS370C010 − TMS320C25 Interface 132
6. Continuous Mode No Frame Synchronization Pulse 133
7. SCI Block Diagram 140
8. SCI Data Frame Formats 141
9. Asynchronous Communication Format 143
10. lsosynchronous Communication Format 143
11. Receiver Operation Flowchart 146
12. Transmitter Operation Flowchart 148
13. TMS370C050 − RS-232-C Interface 160
14. Terminal Interface Example 164
15. Remote Data Acquisition Example 172
16. TMS0170 Block Diagram 181
17. TMS0170 DIP Pin Out 183

Automatic Baud Rate Calculation 193
1. SCI/RS−232 Interface Example 195
2. Autobaud Waveform 198

Using the TMS370 Timer Modules 201
1. Timer Block Diagram 204
2. T1 Prescaler Clock Source 205
3. 16-Bit Programmable General-Purpose T1 206
4. Watchdog Counter 207
5. Keyboard Scan Using T1IC/CR as an External Interrupt 208
6. Dual Compare Mode for T1 210
7. Capture/Compare Mode for T1 211
8. 16-Bit Programmable General-Purpose T2 212
9. Dual Compare Mode for T2 214
10. Dual Capture Mode for T2 215
11. Typical Power-Up/Down Circuit 242
12. Two-Point Routine Operation 243
13. One-Point Main Routine Plus Interrupt Operation 244
14. Stepper Motor Drive Application Schematic 248
15. Stepper Motor Control Application Flowchart 249

PETITIONER ECOBEE
EX. 1010

16. Flowchart for Time-of-Day Clock Application 255
17. Display Dimming Application 263
18. Display Dimming PWM Signal 263
19. Display Dimming Flowchart 265
20. Digital Instrumentation Cluster Application 270
21. Instrumentation Flowchart 272
22. Timer 1 − Dual Compare Mode 284
23. Timer 1 − Capture/Compare Mode 286
24. Timer 2 − Dual Capture Mode 289
25. Timer 2 − Dual Compare Mode 290

Using the TMS370 ADC1 Module 311

1. A/D Converter Block Diagram 314
2. Simplified Model of the Successive Approximation Converter 315
3. A/D Input Pin Model 317
4. Operational Amplifier 319
5. Noninverting Buffer for Analog Input Pin 320
6. Inverting Buffer for Analog Input Pin 320
7. Range Offsetting and Scaling 320
8. Bridge Amplifier 321
9. Example of Interface Circuit to Increase Resolution to Nine Bits 322
10. Transfer Characteristics of the Interface Circuit 323
11. Injecting Noise into the Input Signal 323
12. Block Diagram of Two Step Subranging Conversion 324
13. Aliasing Signal Caused by Inadequate Sampling Rate 325
14. Circuit with Common Impedance Earth Path 326
15. Circuit With No Common Impedance Earth Path 326
16. Reference Voltage Source Impedance 327
17. APNTR Pointer 328
18. Conversion Formula 334
19. Temperature Sensor Interface 337
20. Autoranging Circuit Diagram 339
21. Interfacing Circuit Using SPI 344
22. Interfacing Circuit Using Software Routine 349
23. A/D Control Register Memory Map 356
24. A/D Transfer Characteristics 357
25. Functional Block Diagram of TL505C Interface With TMS370 358
26. Conversion Timing Diagram 359
27. Functional Block Diagram Using D/A Converter as A/D 360
28. Functional Block Diagram Using V/F Converter as A/D 361
29. Block Diagram of Test Set-Up 363
30. Code Width Measurement 364
31. Codes Having Maximum Differential Linearity Error 365
32. Differential Linearity Error 365

PACT Module Sample Routines 385

1. Square Wave 388
2. PWM With Period and Duty Cycle Change 391
3. Example 1 PWM 394

PETITIONER ECOBEE
EX. 1010

4. Timing Diagram 396
5. PWM Example 2 Wave 398
6. PACT Timing Diagram 401
7. External Event, Event Delay, and Sync Pulses 403
8. PACT Timing Diagram 406
9. External Event and PWM 408
10. PACT Timing Diagrams 411
11. CP1 and CP2 Events 413
12. CP6 PWM 417
13. Step Mode PWM 422
14. PACT Timing Diagram 424
15. PACT Timing Diagram 429
16. PACT Dual Port Ram Mapping 429
17. Organization of the Capture Registers and the Circular Buffer in Dual Port RAM 430

Proper Termination of Unused I/O Pins 441

1. Best Solution for Terminating Unused I/O Pins: Pull Low Through a Resistor 444
2. Recommended Termination for the XTAL1 Pin When Used in the External Driven Clock Mode 445
3. Alternate Solution for Terminating Unused I/O Pins: Open Circuit 446
4. Alternate Solution for Terminating Unused I/O Pins: Shared Pull-Down Resistor 447

Interfacing and Accessing External Memory 479

1. Microcomputer Interface Example 482
2. Valid Address-to-Data Read Timing 485
3. Chip-Select Low-to-Data Read Timing 486
4. Chip-Select High-to-Next Data Bus Drive Timing 486
5. Read Data Hold After Chip-Select High Timing 487
6. Write Data Set-Up Timing 488
7. Write Data Hold After Chip-Select High 489
8. Peripheral File Frame 2: Digital Port Control Registers 491

PCB Design Guidelines for Reduced EMI 505

1. EMI Sources, Paths, and Receivers 508
2. Paths of Least Impedance vs. Paths of Least Resistance 509
3. Differential-Mode Radiation 510
4. Common-Mode Radiation 511
5. Oscillator Coupling Onto I/O Signal 511
6. Hidden Schematic Effects of Common Passive Circuit Elements 512
7. PCB Zoning 514
8. Ground Grid 516
9. Micro-Ground 517
10. Series and Parallel Ground Connection Schemes 518
11. π-Filter Configuration 519
12. Slot in a ground plane 521

Cost Effective Input Protection Circuitry for the Texas Instruments TMS370 Family of Microcontrollers 527

PETITIONER ECOBEE
EX. 1010

1. Indeterminate Range for TTL and CMOS Input Thresholds (V_{CC} = 5 V) 530
2. Switching to Vehicle Battery (Vbat) 530
3. Switching to Vehicle Ground 531
4. TMS370 Microcontroller Buffer Circuitry With External Voltage Divider Circuitry 532
5. CMOS Input Levels Over Variations in Vbat 533
6. TTL Input Levels Over Variations in Normal Vbat 535
7. External Electrical Noise Suppression Circuitry 536
8. TMS370 Based External Noise Suppression Circuitry 537
9. TMS370 Simplified 1.2 Micron and 1.6 Micron Silicon Buffer Circuitry 539
10. External Resistance (R2) Values for Various External Transient Voltage Conditions 542
11. Examples of External Protection Circuitry 544

List of Tables

Introduction 5
1. Typical Applications for TMS370 Family Microcontroller Devices 5

Binary-to-BCD Conversion on the TMS370 21
1. Register Values 23

BCD String Addition With the TMS370 25
1. Register Values and Functions 27

RAM Self-Test Routine 67
1. Register Values 69

ROM Checksum on the TMS370 71
1. Register and Function Values 73

Table Search With the TMS370 75
1. Register and Expression Functions 77

Bubble Sort With the TMS370 79
1. Register Functions 81

Routine to Read a 16-Key Keyboard 85
1. Register Properties 87

Using the TMS370 SPI and SCI Modules 107
1. SPI Character Bit Length 113
2. SPI Clock Frequency 113
3. Baud Rates for SPI Bit Rate Values 114
4. Transmitter Character Bit Length 142
5. Asynchronous Baud Rate Register Values for Common SCI Baud Rates 144
6. SPI Control Registers 178
7. SCI Control Registers 179
8. Recommended Operating Conditions 184
9. Electrical Characteristics Over Operating Free Air Temperature Range 184

PETITIONER ECOBEE
EX. 1010

Fast Method to Determine Parity **189**
1. Register Values and Functions 191

Automatic Baud Rate Calculation **193**
1. Format Parameters 195
2. SCI1 Control Registers 196

Using the TMS370 Timer Modules **201**
1. TMS370 Family Timer Module Capabilities 203
2. T1 Module Counter Overflow Rates 216
3. T1 Compare Register Values (SYSCLK = 5 MHz) 217
4. T2 Module Counter Overflow Rates 218
5. T2 Compare Register Values (SYSCLK = 5 MHz) 219
6. Common Register Equate Table 220
7. Timer 1 Module Register Memory Map 285
8. Timer 2A Module Register Memory Map 288

Using the TMS370 ADC1 Module **311**
1. Key Op-Amp Parameters 319
2. Analog Input Table 331
3. Amplifier Gain Factor 339
4. Test Conditions 362

Using Memory Expansion in Microcomputer Mode With Internal Memory Disabled **475**
1. Read and Write Functions 477
2. Wait-State Control Bits 483
3. Memory Interface Timing 483
4. Port Configuration Registers Set-Up 492

Cost Effective Input Protection Circuitry for the Texas Instruments TMS370 Family of Microcontrollers **527**
1. Industry Standard Microcontroller Input Thresholds: 529
2. Typical CMOS Parameters and System Conditions 533
3. Typical TTL Parameters and System Conditions 534
4. TMS370 Microcontroller I/O Pin Buffer Types 538
5. Typical Values of R2 Required for 1.2 and 1.6 Micron Silicon Assuming an External +150V Spike 541
6. Cost Comparison 545

PETITIONER ECOBEE
EX. 1010

Part I
Introduction

PETITIONER ECOBEE
EX. 1010

PETITIONER ECOBEE
EX. 1010

Introduction

Microcontroller Products—Semiconductor Group
Texas Instruments

PETITIONER ECOBEE
EX. 1010

PETITIONER ECOBEE
EX. 1010

Overview

The TMS370 family consists of VLSI, 8-bit, CMOS microcontrollers with on-chip EEPROM storage and peripheral support functions. These devices offer superior performance in complex, real-time control applications in demanding environments. They are available with mask-programmable ROM and EPROM.

Robust features in the TMS370 family of devices enhance performance and enable new application technologies. These features include watchdog modes and low-power modes for mask-OM devices. All family members share software compatibility, so you can run many existing applications on different devices without having to modify the software.

This application book contains software routines, helpful hints, and other resources that will help you take advantage of the many uses of the TMS370 family of microcontrollers. The software routines in this book are available on the TI TMS370 Microcontroller BBS. The parameters are: 8 data, no parity, and 1 stop bit. If you have questions concerning the TMS370 family, please contact us at the following numbers:

- Technical Hotline: (713) 274-2370
- Bulletin Board: (713) 274-3700
- Fax: (713) 274–4203

Other info, including routines, will also be available on TI's world wide web site: http://www.ti.com/

Typical Applications

In expanding its powerful TMS370 family of microcontrollers, TI offers many configurable devices for specific applications. As microcontrollers have evolved, TI has added multiple peripheral functions to chips that originally had only a CPU, memory, and I/O blocks. Now, with the high-performance, software-compatible TMS370 microcontrollers, you can choose from over 78 standard products. Alternatively, you can use as many as 16 function modules to configure your new device quickly, easily, and cost effectively for your application.

The TMS370 family of devices is the ideal choice for (but not limited to) the applications shown in Table 1.

Table 1. Typical Applications for TMS370 Family Microcontroller Devices

Application Area	Applications	
Automotive	Climate control systems Cruise control Entertainment systems Instrumentation	Navigational systems Engine control Antilock braking
Computer	Keyboards Peripheral interface control	Disk controllers Terminals
Industrial	Motor control Temperature controllers Process control	Meter control Medical instrumentation Security systems
Telecommunications	Modems Intelligent phones Intelligent line card control	Telecopiers Debit cards

PETITIONER ECOBEE
EX. 1010

PETITIONER ECOBEE
EX. 1010

Part II
Software Routines

Part II contains three sections:

Arithmetic 7

Memory Operations 61

Specific Functionality 83

PETITIONER ECOBEE
EX. 1010

PETITIONER ECOBEE
EX. 1010

16×16 (32-Bit) Multiplication With the TMS370

Microcontroller Products—Semiconductor Group
Texas Instruments

PETITIONER ECOBEE
EX. 1010

PETITIONER ECOBEE
EX. 1010

16×16 (32-Bit) Multiplication

This example multiplies the 16-bit value in register pair R2, R3 by the value in register pair R4, R5. The results are stored in R6, R7, R8, R9; registers A and B are altered.

Routine

```
*******************************************************
*   16-BIT MPY:                 XH    XL       X VALUE
*                          X    YH    YL       Y VALUE
*                          ---------------
*                             XLYLm  XLYL1     1 = LSB
*                     XHYLm   XHYL1            m = MSB
*                     XLYHm   XLYH1
*          +  XHYHm  XHYH1
*          -------------------------------
*             RSLT3  RSLT2   RSLT1  RSLT0
*******************************************************
XH       .EQU      R2          ;Higher operand of X
XL       .EQU      R3          ;Lower operand of X
YH       .EQU      R4          ;Higher operand of Y
YL       .EQU      R5          ;Lower operand of Y
RSLT3    .EQU      R6          ;MSbyte of the final result
RSLT2    .EQU      R7
RSLT1    .EQU      R8
RSLT0    .EQU      R9          ;LSbyte of the final result

MPY32    CLR      RSLT2        ;Clear the present value
         CLR      RSLT3
         MPY      XL,YL        ;Multiply LSbytes
         MOVW     B,RSLT0      ;Store in result register 0
         MPY      XH,YL        ;Get XHYL
         ADD      R1,RSLT1     ;Add to existing result XLYL
         ADC      R0,RSLT2     ;Add carry if present
         ADC      #0,RSLT3     ;Add if carry present
         MPY      XL,YH        ;Multiply to get XLYH
         ADD      R1,RSLT1     ;Add to existing result XLYL+XHYL
         ADC      R0,RSLT2     ;Add to existing results and carry
         ADC      #0,RSLT3     ;Add if carry present
         MPY      XH,YH        ;Multiply MSbytes
         ADD      R1,RSLT2     ;Add once again to the result register
         ADC      R0,RSLT3     ;Do the final add to the result reg
         RTS                   ;Return to call subroutine
```


PETITIONER ECOBEE
EX. 1010

PETITIONER ECOBEE
EX. 1010

Binary Division With the TMS370

Microcontroller Products—Semiconductor Group
Texas Instruments

PETITIONER ECOBEE
EX. 1010

PETITIONER ECOBEE
EX. 1010

Divide 16-Bit Number by 8-Bit Number

This routine divides a 16-bit number concatenated in R1:R2 by an 8-bit number in R3 to give a 16-bit quotient and an 8-bit remainder as shown in Figure 1. This routine uses the DIV instruction (note that a DIV function provides maximum values of 8-bits, 255^{10}, for both quotient and remainder). First, the dividend MSbyte is divided to find the quotient's MSbyte; then the concatenated remainder and dividend LSbyte are divided to find the quotient's LSbyte.

Figure 1. Before and After Register Values for 16/8 Divide

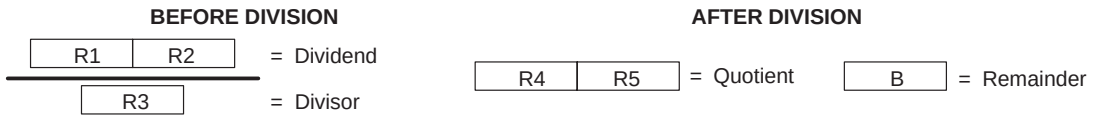

Routine

```
   .TEXT 7000h
;
FLAGS     .EQU R7          ; Register location of FLAG bits
OVERFLOW  .DBIT 0,FLAGS    ; Bit 0 of FLAGS register is OVERFLOW bit
;
;
; Register assignments:
;    R1/R2 contain the dividend MSbyte/LSbyte
;    R3 contains the divisor
;    R4/R5 contain the quotient MSbyte/LSbyte after operation
;    Register B holds the remainder after operation
;
;
;
DIVIDE8   CLR    A         ; Clear MSbyte of registers A:B
          DIV    R3,A      ; Divide dividend MSbyte to getquotient MSbyte
          JV     OVERF     ; Exit if overflow
          MOV    A,R4      ; Move MSbyte of quotient to storage.
          MOV    B,A       ; Move remainder to MSbyte of registers A:B
          MOV    R2,B      ; Move dividend LSbyte to reg. B
          DIV    R3,A      ; Divide A:B to get quotient LSbyte and remainder
          JV     OVERF     ; Exit if overflow
          MOV    A,R5      ; Store the quotient LSbyte next to MSbyte with
          RTS              ; remainder staying in B
                           ;
OVERF     SBIT2  OVERFLOW  ; Set overflow bot if overflow occurs
          RTS              ;
```


PETITIONER ECOBEE
EX. 1010

Divide 16-Bit Number by 16-Bit Number

This program divides a 16-bit dividend by a 16-bit divisor and produces a 16-bit quotient with a 16-bit remainder. All numbers are unsigned positive integers and can range from 0 to FFFFh. The same principle can be applied to larger or smaller divide routines to allow different-sized quotients, dividends, divisors, and remainders. Registers used in the division can be visualized as shown in Figure 2.

Figure 2. Before and After Register Values for 16/16 Divide

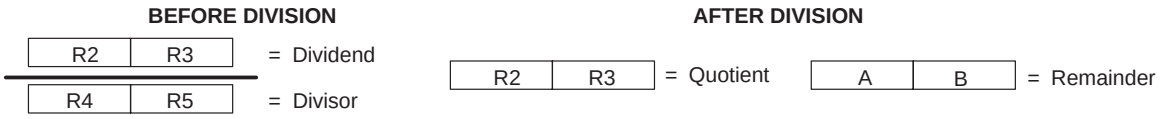

Routine

```
       .TEXT 7000h
;
;
; Register assignments:
;    R2/R3 contain the dividend MSbyte/LSbyte
;    R4/R5 contain the divisor
;    R2/R3 contain the quotient MSbyte/LSbyte after operation
;    Registers A and B hold the remainder after operation
;
;
;
;
DIV16  MOV    #16,R6    ; Set loop counter to 16 -- one for each
                        ;  quotient bit
       CLR    A         ; Initialize result register (MSbyte)
       CLR    B         ; Initialize result register (LSbyte)
DIVLOP RLC    R3        ; Multiply dividend by 2 (MSbyte)
       RLC    R2        ;
       RLC    B         ; Shift dividend into A:B for comparison
       RLC    A         ;  to divisor
       JNC    SKIP1     ; Check for possible error condition that
       SUB    R5,B      ;  results when a 1 is shifted past the
       SBB    R4,A      ;  MSbyte,
       SET    C         ; Correct by subtracting divisor and
                        ;  setting carry.
       JMP    DIVEND    ; If MSB=1, then subtract is possible
SKIP1  CMP    R4,A      ; Compare MSbytes of dividend and divisor
       JNC    DIVEND    ; Jump if divisor is bigger
       JNE    MSBNE     ; If not equal, jump
       CMP    R5,B      ; If equal, compare LSbytes
       JNC    DIVEND    ; Jump if divisor is bigger
MSBNE  SUB    R5,B      ; If smaller, subtract divisor from
       SBB    R4,A      ;  dividend. Carry gets folded into next
                        ;  rotate and gets doubled each time.
DIVEND DJNZ   R6,DIVLOP ; Do next bit, is divide done?
       RLC    R3        ; Finish last rotate.
       RLC    R2        ;
```


PETITIONER ECOBEE
EX. 1010

BCD-to-Binary Conversion on the TMS370

Microcontroller Products—Semiconductor Group
Texas Instruments

PETITIONER ECOBEE
EX. 1010

PETITIONER ECOBEE
EX. 1010

BCD-to-Binary Conversion

This routine converts a four-digit BCD number to binary. The maximum BCD number is 9999 decimal. Operands originate and are stored in general-purpose RAM. The BCD number is composed of the four digits (D3, D2, D1, and D0) contained in the bytes DH and DL. The binary number is calculated by dividing the number into powers of ten (Binary = D3 × 1000 + D2 × 100 + D1 × 10 + D0 × 1). Multiplying by 10 is easier if the number is further broken up into other numbers so that D2 × 10 = D2 × (8 + 2) = D2 × 8 + D2 × 2. Likewise, multiplying by 1000 can be calculated by D3 × (1000) = D3 × (1024 – 24) = D3 × (1024 – (8 + 16)) = D3 × 1024 – (D3 × 8 + D3 × 16). This may seem complex, but it works quickly and uses few bytes.

Routine

```
      .TEXT 7000h
BH    .EQU  R2         ;Binary number MSbyte
BL    .EQU  R3         ;Binary number LSbyte
DH    .EQU  R4         ;Decimal number MSbyte
DL    .EQU  R5         ;Decimal number LSbyte
                       ;D0=ones, D1=tens,
                       ;D2=hundreds, D3=thousands
TOP    CLR  BH         ;Clear out binary MSbyte
       MOV  DL,BL      ;D0 to B0
       AND  #0Fh, BL   ;Convert D0
                       ;
       MOV  DL,A       ;D1×10=D1×8+D1×2
       AND  #0F0h,A    ;Isolate D1
       MOV  A,B        ;B=D1×16
       SWAP R1         ;B=D1
       RR   A          ;A=D1×16/2=D1×8
       RL   B          ;B=D1×2
       ADD  B,A        ;A=D1×10   (D1×8+D1×2)
       ADD  R0,BL      ;D1:D0 converted
                       ;
       MOV  DH,B       ;Get upper two digits
       AND  #0Fh,B     ;Isolate D2
       MPY  #100,B     ;R0:R1=D2×100
       ADD  R1,BL      ;Add to current total
       ADC  R0,BH      ;D2:D1:D0 converted
                       ;
       MOV  DH,A       ;Isolate D3
       AND  #0F0h,A    ;A=D3×16
       MOV  A,B        ;B=D3×16
       RRC  B          ;B=D3× 8
       ADD  B,A        ;A=D3 × 24
       SUB  R0,BL      ;BH:BL=BH:BL–24×D3
       SBB  #0,BH      ;
       CLRC            ;Setup for rotate
       RRC  B          ;B=D3×4
       ADD  R1,BH      ;BH:BL=BH:BL+D3×4×256
```


PETITIONER ECOBEE
EX. 1010

PETITIONER ECOBEE
EX. 1010

Binary-to-BCD Conversion on the TMS370

Microcontroller Products—Semiconductor Group
Texas Instruments

PETITIONER ECOBEE
EX. 1010

PETITIONER ECOBEE
EX. 1010

Binary-to-BCD Conversion

This program converts a 16-bit binary word (0 to 65.535) to a packed six-nibble BCD value.

Table 1. Register Values

Register	Before	After
A	XX	BCD MSbyte
B	XX	BCD
R2	XX	BCD LSbyte
R3	BINARY MSbyte	ZERO
R4	BINARY LSbyte	ZERO
R5	XX	ZERO

Routine

```
         .TEXT 7000H    ;Absolute start address
BN2BCD   CLR   A        ;Prepare answer registers
         CLR   B        ;
         CLR   R2       ;
         MOV   #16,R5   ;Move loop count to register
LOOP     RLC   R4       ;Shift higher binary bit out
         RLC   R3       ;Carry contains higher bit
         DAC   R2,R2    ;Double the number then add
                        ;the binary bit
         DAC   R1,B     ;Binary bit (a 1 in carry on
                        ;the 1st time is
         DAC   R0,A     ;doubled 16 times).
         DJNZ  R5,LOOP  ;Do this 16 times, once for
                        ;each bit
         RTS            ;Back to calling routine
```


PETITIONER ECOBEE
EX. 1010

PETITIONER ECOBEE
EX. 1010

BCD String Addition With the TMS370

Microcontroller Products—Semiconductor Group
Texas Instruments

PETITIONER ECOBEE
EX. 1010

PETITIONER ECOBEE
EX. 1010

BCD String Addition

The following routine uses the addition instruction to add two multi-digit numbers together. Each number is a packed BCD string of less than 256 bytes (512 digits), stored at memory locations STR1 and STR2. This routine adds the two strings together and places the result in STR2. The strings must be stored with the most significant byte in the lowest numbered register.

Table 1. Register Values and Functions

Register	Before	After	Function
A	XX	??	Accumulator
B	XX	0	Length of string
R2	XX	??	Temporary save register
STR1	BINARY MSbyte	no change	BCD string
STR2	BINARY LSbyte	STR1 + STR2	Target string, 6 bytes max

Routine

```
;Decimal addition subroutine. Stack must have 3 available bytes.
;On output: STR2 = STR1 + STR2
       .TEXT  7000h         ;Absolute start address
STR1   .EQU   80E0h         ;Start of first string
STR2   .EQU   80F0h         ;Start of second string
                            ;and result
ADDBCD CLRC                 ;Clear carry bit
       PUSH   ST            ;Save status to stack
LOOP   MOV    *STR1–1[B],A  ;Load current byte
       MOV    A,R2          ;Save it in R2
       MOV    *STR2–1[B],A  ;Load next byte of STR2
       POP    ST            ;Restore carry from last add
       DAC    R2,A          ;Add decimal bytes
       PUSH   ST            ;Save the carry from this add
       MOV    A,*STR2–1[B]  ;Store result
       DJNZ   B,LOOP        ;Loop until done
       POP    ST            ;Restore stack to starting
                            ;position
       RTS                  ;Back to calling routine
```


PETITIONER ECOBEE
EX. 1010

PETITIONER ECOBEE
EX. 1010

TMS370 Floating Point Package

Microcontroller Products—Semiconductor Group
Texas Instruments

PETITIONER ECOBEE
EX. 1010

PETITIONER ECOBEE
EX. 1010

Introduction

This report describes assembly language floating point math routines for the TMS370 family of microcontrollers. Floating point operations allow binary processors to carry out decimal, signed arithmetic. This package includes most of the common arithmetic and conversion routines used in floating point operations. The routines included are:

- Floating point addition/subtraction
- Floating point number comparison
- Floating point division
- Floating point multiplication
- Floating point increment/decrement
- Floating point number test
- Floating point negation
- Floating point to signed 8-bit integer conversion
- Floating point to signed long (16-bit) integer conversion
- Floating point to unsigned 8-bit integer conversion
- Floating point to unsigned long (16-bit) integer conversion
- Signed 8-bit integer to floating point conversion
- Signed long (16-bit) integer to floating point conversion
- Unsigned long (16-bit) integer to floating point conversion
- Unsigned 8-bit integer to floating point conversion

PETITIONER ECOBEE
EX. 1010

Floating Point Format

Each number in this floating point format is 24 bits long. This includes eight bits for the exponent, fifteen for the mantissa, and the remaining bits for the sign.

The format is as follows:

E E E E E E E E S M M M M M M M M M M M M M M M

The first byte is devoted to the exponent. The most significant bit of the second byte is the sign bit and the remaining bits are the mantissa. This format has been chosen so that arithmetic on the objects are restricted to normal 8-bit operation or a 16-bit operations.

With this format, a routine that operates on one of these floating point values can check the sign bit and then set that bit as implied. A 16-bit operation can then be used to modify the value.

The exponent's bias is 128: subtract 128 from the unsigned value of the eight exponential bits to find the actual value of the exponent.

Example:	exp = 00h	->	real exp = 00h – 128	=	–128
	exp = FFh	->	real exp = FFh – 128	=	127
	exp = 80h	->	real exp = 80h – 128	=	0

The mantissa contains 15 bits plus an implied bit. The layout is:

(m0) m1 m2 ... m15

The m0 bit is implied and is always 1. The value of each m*i* is the reciprocal of 2 to the *i*th power.

So the layout in terms of values is:

(1) 1/2 1/4 1/8 1/16 1/32 1/64 1/128 1/256 1/512 1/1024 1/2048 . . .

Given the above format, some special floating point values are:

ZERO	–	000000h	=	2^{-128}	=	approx	2.94E-39
MAX_POS	–	FF7FFFh	=	$2^{128} - 2^{112}$	=	approx	3.4E38
MIN_POS	–	000001h	=	$2^{-128} + 2^{-143}$	=	approx	2.94E-39
MAX_NEG	–	FFFFFFh	=	$2^{112} - 2^{128}$	=	approx	-3.4E38
MIN_NEG	–	008000h	=	$-(2^{-128})$	=	approx	-2.94E-39
EPSILON	–	710000h	=	2^{-15}	=	approx	3E-5

MAX_POS is the largest positive number the format can represent. MIN_POS is the smallest positive number that can be represented. ZERO is a special case which is treated as true 0. EPSILON is the smallest number which can be added to 1.0 and result in a sum which is not 1.0.

The actual value of a floating point number can be expressed as : $s \times M \times 2^{e-128}$, where s is the sign of the number –1 or 1, M is the value of the mantissa, and e is the bit value of the exponent.

A few more examples:

11	=	833000h	–31.25	=	84FA00h
1	=	800000h	–1	=	808000h

PETITIONER ECOBEE
EX. 1010

Floating Point Routines

Floating Point Addition/Subtraction

```
;Rev.1.0
;Function name   -    $fp_add,$fp_sub
;
;Purpose         -    1) Perform the addition of two floating point numbers.
;
;                        OP1 + OP2
;
;                     2) Perform the subtraction of two floating point
;                        numbers.
;
;                        OP1 - OP2
;
;
;Registers used  -     Register       Before                 After
;                    -------------------------------------------------------
;                       Status |        XX           |      Modified
;
;                         R14  |  OP1 exponent       |      Modified
;                         R15  |  OP1 mantissa MSB   |      Modified
;                         R16  |  OP1 mantissa LSB   |      Modified
;
;                         R17  |  OP2 exponent       |  Result exponent
;                         R18  |  OP2 mantissa MSB   |  Result mantissa MSB
;                         R19  |  OP2 mantissa LSB   |  Result mantissa LSB
;
;Size                 200 Bytes
;
;Stack space          4 Bytes
;
;Notes            -    1) Some special considerations for floating point
;                      operations are:
;
;                      ZERO            +  OP2          =  OP2
;                      OP1             +  ZERO         =  OP1
;
;                      ZERO            -  OP2          =  -OP2
;                      OP1             -  ZERO         =  OP1
;
```


PETITIONER ECOBEE
EX. 1010

```
;                       2) If an operation results in a sum or difference
;                       which is greater than MAX_POS, then it is overflow.
;                       The result placed in registers R17, R18, R19 will
;                       be MAX_POS.
;
;                       3) If an operation results in a sum or difference
;                       which is less than MAX_NEG, then it is overflow. The
;                       result placed in registers R17, R18, R19
;                       will be MAX_NEG.
;
;                       4) If an addition results in a sum with a magnitude too
;                       small to represent, then it is underflow. The result
;                       placed in registers R17, R18, R19 will be ZERO.

exp1    .equ    r14
msb1    .equ    r15
lsb1    .equ    r16
exp2    .equ    r17
msb2    .equ    r18
lsb2    .equ    r19
sign1   .dbit   7,msb1
sign2   .dbit   7,msb2
subflag .dbit   1,r0

        .global $fp_add,$fp_sub

$fp_sub cmpbit  sign2                   ;Enter subtraction here.

$fp_add btjo    #0ffh,exp2,chk_op1      ;Check for adding zero as OP2.
        btjo    #07fh,msb2,chk_op1
        btjo    #0ffh,lsb2,chk_op1

op2zero mov     exp1,exp2               ;OP2=zero, so result will be OP1.
        movw    lsb1,lsb2
        rts

chk_op1 btjo    #0ffh,exp1,calc         ;Check for subtracting zero.
        btjo    #0ffh,msb1,calc
        btjo    #0ffh,lsb1,calc

byebye  rts

calc    push    b
        mov     exp2,b                   ;Find the difference between
        sub     exp1,b                   ;exponents.
        jc      noswitch                 ;Jump if exp2 >= exp1.

switch  push    exp1                     ;Switch operands to make OP2 > OP1.
        push    msb1
        push    lsb1
        movw    lsb2,lsb1
        mov     exp2,exp1
        pop     lsb2
        pop     msb2
        pop     exp2
        compl   b

noswitch
        cmp     #16,b                    ;Will the smaller number affect result?
        jhs     done2                    ;No, we are done.
        push    a
        jbit1   sign2,neg                ;Determine which of four cases based on
        jbit0   sign1,pospos             ;sign.

posneg  mov     #02h,a                   ;Result positive, but set subtract flag.
        jmp     cont

neg     jbit0   sign1,negpos
```


PETITIONER ECOBEE
EX. 1010

```
negneg  mov    #80h,a          ;Eventual sign negative
        jmp    cont

negpos  mov    #82h,a          ;Result negative, set subtract flag.
        jmp    cont

pospos  clr    a               ;Eventual sign positive

cont    or     #80h,msb1       ;Set the implied one.
        or     #80h,msb2
        or     #0h,b
        jz     noshift

loop    clrc
        rrc    msb1            ;Align the smaller mantissa.
        rrc    lsb1
        djnz   b,loop

noshift jbit1  subflag,sub
        add    lsb1,lsb2       ;Add the mantissas.
        adc    msb1,msb2
        jnc    done            ;If carry, adjust the mantissa and
        rrc    msb2            ;increment the exponent.
        rrc    lsb2
        inc    exp2
        jz     maxval          ;If overflow occurs, return max value.

done    and    #7fh,msb2       ;Clear the implied one bit.
        and    #080h,a         ;Clear the subtract flag.
        or     a,msb2          ;Set sign bit if appropriate.
        pop    a

done2   pop    b
        rts

sub     sub    lsb1,lsb2
        sbb    msb1,msb2
        jc     skp2            ;If borrow occurred, exp1=exp2,man1>man2,
        xor    #80h,a          ;toggle the sign bit, and complement result
        inv    msb2
        compl  lsb2
        adc    #0,msb2

skp2    jn     done            ;Adjust the mantissa if implied one is not
                               ;set.
        jnz    shift           ;Check the MSB and LSB.
        or     #0h,lsb2
        jz     zero

shift   dec    exp2
        jnc    zero            ;Underflow, return 0.
        clrc
        rlc    lsb2
        rlc    msb2
        jpz    shift
        jmp    done

zero    clr    exp2            ;Special case for result = 0.
        clr    msb2
        clr    lsb2
        pop    a
        pop    b
        rts
```


PETITIONER ECOBEE
EX. 1010

```
maxval  mov     #0ffh,exp2          ;Create maximum value.
        movw    #07fffh,lsb2
        or      a,msb2              ;Set sign bit as appropriate.
        pop     a
        pop     b
        rts
```


PETITIONER ECOBEE
EX. 1010

Floating Point Number Comparison

```
;Rev.1.0

;Function name   -    $fp_cmp

;

;Purpose         -    Perform a comparison of two floating point numbers.
;                      The routine compares OP2 to OP1 and sets the status
;                      bits. The status result of this routine will be
;                      equivalent to an 8-bit integer cmp such as:  CMP
;                      OP1,OP2.
;
;
;
;

;Registers used  -     Register       Before                 After
;                    -------------------------------------------------------
;                        Status |        XX           |   Set on result
;
;                          R14  |  OP1 exponent       |  OP1 exponent
;                          R15  |  OP1 mantissa MSB   |  OP1 mantissa MSB
;                          R16  |  OP1 mantissa LSB   |  OP1 mantissa LSB
;
;                          R17  |  OP2 exponent       |  OP2 exponent
;                          R18  |  OP2 mantissa MSB   |      Modified
;                          R19  |  OP2 mantissa LSB   |  OP2 mantissa LSB

;
;                      The status register will be set according to the result
;                      of the compare:

;
;                      C = 0
;                      V = 0
;                      Z = 1, if OP1 is bit for bit the same as OP2,
;                        = 0, otherwise.
;                      N = 0, if OP2 is greater than or equal to OP1,
;                        = 1, otherwise.
;

;Size                  55 bytes

;

;Stack space           1 byte

;
exp1     .EQU    R14
msb1     .EQU    R15
lsb1     .EQU    R16
exp2     .EQU    R17
msb2     .EQU    R18
lsb2     .EQU    R19

         .GLOBAL $fp_cmp
```


PETITIONER ECOBEE
EX. 1010

```
$fp_cmp  PUSH  msb2                     ;Check for different sign first.
         XOR   msb1,msb2
         BTJZ  #080h,msb2,SAMESIGN      ;If MSB is 0, operands have same sign.
         POP   msb2                     ;Operands have different sign.  Test
         JN    NEG                      ;MSB2 to check sign.  Make
                                        ;appropriate dummy move to set
         JMP   NONEG                    ;status.
         RTS

SAMESIGN POP   msb2                     ;Restore MSB2
         CMP   exp1,exp2                ;OP1 > OP2 ?
         JLO   LESS
         JNE   GREATER
         CMP   msb1,msb2
         JLO   LESS
         JNE   GREATER
         CMP   lsb1,lsb2
         JLO   LESS
         JEQ   DONE

GREATER  BTJZ  #080h,msb1,NONEG        ;ABS(OP2) > ABS(OP1)

NEG      MOV   #080h,msb2

DONE     RTS

LESS     BTJZ  #80H,msb1,NEG           ;ABS(OP2) < ABS(OP1)

NONEG    MOV   #01H,msb2

         RTS
```


PETITIONER ECOBEE
EX. 1010

Floating Point Division

```
;Rev.1.0
;Function name   -    $fp_div
;
;Purpose         -    Perform the division of two floating point numbers
;
;                     OP1 / OP2
;
;Registers used  -     Register       Before                 After
;                    -------------------------------------------------------
;                        Status |        XX           |      Modified
;
;                          R14  |  OP1 exponent       |      Modified
;                          R15  |  OP1 mantissa MSB   |      Modified
;                          R16  |  OP1 mantissa LSB   |      Modified
;
;                          R17  |  OP2 exponent       |  Result exponent
;                          R18  |  OP2 mantissa MSB   |  Result mantissa MSB
;                          R19  |  OP2 mantissa LSB   |  Result mantissa LSB
;
;Size                  189 bytes
;
```


PETITIONER ECOBEE
EX. 1010

```
;Stack space          4 bytes
;
;
;Notes           -    1) Some special considerations for floating point
;                     divide are:

;
;                       ZERO  /  OP2          =  ZERO
;                       OP1   /  ZERO         =  MAX_POS (if OP1 >= 0)
;                                                MAX_NEG (if OP1 <  0)
;
;                     2) If a division results in a quotient which is
;                     greater than MAX_POS, then it is overflow. The
;                     result placed in registers R17, R18, R19 will be
;                     MAX_POS.
;
;                     3) If a division results in a quotient which is
;                     less than MAX_NEG, then it is overflow. The result
;                     placed in registers R17, R18, R19 will be MAX_NEG.
;
;                     4) If a division results in a quotient with a
;                     magnitude too small to represent, then it is underflow.
;                     The result placed in registers R17, R18, R19
;                     will be ZERO.

EXP1          .equ  R14
MAN1MSB       .equ  R15
MAN1LSB       .equ  R16
EXP2          .equ  R17
MAN2MSB       .equ  R18
MAN2LSB       .equ  R19
COUNTER       .equ  R20
FLAGS         .equ  R23

OVFL          .dbit 0,FLAGS
SIGN_OP1      .dbit 7,MAN1MSB
              .global $fp_div

$fp_div PUSH  A                         ;Save registers

CHK_OP1                                 ;Check for OP1=ZERO.
        MOV   MAN1MSB,A                 ;Use FLAGS here as dummy register
        OR    EXP1,A                    ;OR all parts operand together.
        OR    MAN1LSB,A                 ;If ZERO, no bits will be ones.
        JNZ   CHK_OP2
        CLR   MAN2LSB                   ;OP1 is ZERO, so clear OP2 as answer.
        CLR   MAN2MSB                   ;Store results in OP2 registers.
        CLR   EXP2
        POP   A                         ;Restore registers to original
                                        ;values.
        RTS                             ;Exit fp_div.

CHK_OP2                                 ;Check for OP2=ZERO.
        MOV   MAN2MSB,A                 ;Use FLAGS here as dummy register
        OR    EXP2,A                    ;OR all parts operand together.
        OR    MAN2LSB,A                 ;If ZERO, no bits will be ones.
        JNZ   FINDSIGN
        MOV   #0FFh,EXP2                ;Set result to MAX_POS or MAX_NEG
        MOVW  #07FFFh,MAN2LSB           ;depending on the sign bit.
        OR    MAN1LSB,MAN2LSB
        POP   A                         ;Restore registers to original
                                        ;values.
        RTS                             ;Exit fp_div.
```


PETITIONER ECOBEE
EX. 1010

```
FINDSIGN
        PUSH  B                          ;Save registers.
        PUSH  COUNTER
        PUSH  FLAGS
        MOV   MAN1MSB,FLAGS              ;Find sign of quotient.
        XOR   MAN2MSB,FLAGS              ;If sign flags differ, FLAGS 7=1.
        AND   #080h,FLAGS                ;Clear other bits in FLAGS.
        OR    #080h,MAN1MSB              ;Set implied 1 in sign bit position.
        OR    #080h,MAN2MSB              ;

SUBEXP  CLR   B                          ;Clear B for result of exponent math.
        SUB   EXP2,EXP1                  ;Subtract exponents.
        ADC   #0h,B                      ;Save status of carry bit from SUB.
        MOV   EXP1,EXP2                  ;Move result of SUB to EXP2.
        ADD   #080h,EXP2                 ;Correct for +128 offset.
        ADC   #0FFh,B                    ;Save status of carry bit and
        JZ    SETUP                      ;subtract 1 from SUB. Jump on result
        JP    CHK_OVER                   ;of exponent math:
                                         ;             01 = possible overflow
                                         ;             00 = ok
                                         ;             FF = definite underflow

UNDERFLOW                                ;Result of division is underflow.
        CLR   MAN2LSB                    ;Store results in OP2 registers.
        CLR   MAN2MSB
        CLR   EXP2
        POP   FLAGS                      ;Restore registers to original
                                         ;values.
        POP   COUNTER
        POP   B
        POP   A
        RTS                              ;Exit fp_div.

CHK_OVER                                 ;Subtraction of exponents may have
        BTJO  #0FFh,EXP2,OVERFLOW        ;overflowed. If exponent is not 00,
        SBIT1 OVFL                       ;then result has definitely
                                         ;overflowed.
                                         ;If result may be ok, set flag.

SETUP   MOV   #16,COUNTER                ;Set loop counter to 16, one for each
        CLR   A                          ;quotient bit, and initalize result
                                         ;registers (reg B was cleared above).

SKIP1   CMP   MAN2MSB,MAN1MSB            ;Compare MSBs of dividend and
                                         ;divisor.
        JLO   DIVEND                     ;Jump if divisor is bigger.
        JNE   MSBNE                      ;If equal, compare LSBs.
        CMP   MAN2LSB,MAN1LSB            ;Compare LSBs.
        JLO   DIVEND                     ;Jump if divisor is bigger.

MSBNE   SUB   MAN2LSB,MAN1LSB            ;If smaller, subtract divisor from
        SBB   MAN2MSB,MAN1MSB            ;dividend.  Carry is folded into
                                         ;next rotate and doubled each time.
```


PETITIONER ECOBEE
EX. 1010

```
DIVEND  DJNZ  COUNTER,DIVIDE          ;Next bit. Is divide done?
        RLC   B                       ;Finish last rotate.
        RLC   A
        JN    DONE                    ;If MSB is not one, decrement EXP2
        SUB   #01h,EXP2               ;and go back up and shift one more
                                      ;time.
        JNC   UNDERFLOW               ;If EXP2 was zero, decrement has
                                      ;caused an underflow.
        SBIT0 OVFL                    ;Clear flag to show possible overflow
                                      ;condition has been corrected.
        INC   COUNTER                 ;Reset counter for 1 last loop
                                      ;through.
        JMP   LAST1

OVERFLOW                              ;Result of divide is overflow.
        MOVW  #07FFFh,MAN2LSB         ;Store results in OP2 registers.
        MOV   #0FFh,EXP2
        OR    FLAGS,MAN2MSB           ;Set sign bit of result.
        POP   FLAGS                   ;Restore registers to original
                                      ;values.
        POP   COUNTER
        POP   B
        POP   A
        RTS                           ;Exit fp_div.

DIVIDE                                ;16 x 16 division routine.
        RLC   B                       ;Multiply divend by 2.
        RLC   A                       ;

LAST1   RLC   MAN1LSB                 ;Shift dividend into MAN1MSB:MAN1LSB
        RLC   MAN1MSB                 ;for comparison to divisor.
        JNC   SKIP1                   ;Check for possible error condition
        SUB   MAN2LSB,MAN1LSB         ;that results when a 1 is shifted
                                      ;past the MSB.
        SBB   MAN2MSB,MAN1MSB         ;Correct by subtracting
        SETC                          ;divisor and setting carry.
        JMP   DIVEND

DONE    BTJO  #01h,FLAGS,OVERFLOW     ;Make sure that divide sequence fixed
                                      ;previous exponent overflow.
        OR    #07Fh,FLAGS             ;Set FLAGS bits except for sign bit.
        AND   FLAGS,A                 ;Set sign bit.
        MOVW  B,MAN2LSB               ;Put answer in result register.
        POP   FLAGS                   ;Restore registers to original
                                      ;values.
        POP   COUNTER
        POP   B
        POP   A
        RTS                           ;Exit fp_div.
```


PETITIONER ECOBEE
EX. 1010

Floating Point Multiplication

```
;Rev.1.0

;Function name   -    $fp_mul

;

;Purpose         -    Perform the multiplication of two floating point
;                      numbers.
;
;                      OP1 * OP2
;

;Registers used  -     Register       Before                 After
;                    -------------------------------------------------------
;                        Status |        XX           |      Modified
;
;                          R14  |   OP1 exponent      |      Modified
;                          R15  |   OP1 mantissa MSB  |      Modified
;                          R16  |   OP1 mantissa LSB  |      Modified
;
;                          R17  |   OP2 exponent      |  Result exponent
;                          R18  |   OP2 mantissa MSB  |  Result mantissa MSB
;                          R19  |   OP2 mantissa LSB  |  Result mantissa LSB
;

;Size                  189 Bytes

;

;Stack space           4 Bytes

;

;Notes           -    1) Some special considerations for floating point
;                      multiplication are:
;
;                      ZERO            *  OP2          =  ZERO
;                      OP1             *  ZERO         =  ZERO
;
;                      2) If a multiplication results in a product which is
;                      greater than MAX_POS, then it is overflow. The result
;                      placed in registers R17, R18, R19 will be MAX_POS.
;
;                      3) If a multiplication results in a product which is
;                      less than MAX_NEG, then it is overflow. The result
;                      placed in registers R17, R18, R19 will be MAX_NEG.
;
;                      4) If a multiplication results in a product with a
;                      magnitude too small to represent, then it is underflow.
;                      The result placed in registers R17, R18, R19
;                      will be ZERO.

EXP1          .equ  R14
MAN1MSB       .equ  R15
MAN1LSB       .equ  R16
EXP2          .equ  R17
MAN2MSB       .equ  R18
MAN2LSB       .equ  R19
FLAGS         .equ  R20
RSLT1         .equ  R21

SIGNBIT       .dbit 7,FLAGS
UNDER_BIT     .dbit 0,FLAGS
IMPLIED_ONE   .dbit 7,MAN1LSB
```


PETITIONER ECOBEE
EX. 1010

```
        .global $fp_mul
$fp_mul                                 ;Check for OP1=ZERO.
        BTJO  #0FFh,EXP2,CHK_OP2
        BTJO  #0FFh,MAN1LSB,CHK_OP2
        BTJO  #0FFh,MAN1MSB,CHK_OP2
        CLR   MAN2LSB                   ;OP1 is ZERO, so clear OP2 as answer.
        CLR   MAN2MSB
        CLR   EXP2
        RTS                             ;Exit fp_mul

CHK_OP2                                 ;Check for OP2=ZERO
        BTJO  #0FFh,EXP2,FINDSIGN
        BTJO  #0FFh,MAN2LSB,FINDSIGN
        BTJO  #0FFh,MAN2MSB,FINDSIGN
        RTS                             ;OP2 is ZERO, so done.  Exit fp_mul.

FINDSIGN
        PUSH  R0                        ;Save values of registers used.
        PUSH  RSLT1
        PUSH  FLAGS
        MOV   MAN1MSB,FLAGS             ;Find sign of product.
        XOR   MAN2MSB,FLAGS             ;If sign flags differ, FLAGS 7=1.
        AND   #080h,FLAGS               ;Clear other bits in FLAGS.
        OR    #080h,MAN1MSB             ;Set implied 1 in sign bit position.
        OR    #080h,MAN2MSB

ADDEXP
        CLR   R0                        ;Clear A for result of exponent math.
        ADD   EXP1,EXP2                 ;Add exponents.
        ADC   #0h,A                     ;Save status of carry bit from ADD.
        SUB   #080h,EXP2                ;Correct for +128 offset.
        ADC   #0FFh,A                   ;Save status of carry bit and
                                        ;subtract 1 from SUB.
        JZ    MULTIPLY                  ;Jump according to
                                        ;result of exponent math:
        JN    CHK_UNDER                 ;            FF = underflow
                                        ;            00 = ok
                                        ;            01 = definite overflow

OVERFLOW                                ;Result of multiplication is
                                        ;overflow.
        MOVW  #07FFFh,MAN2LSB           ;Store results in OP2 registers.
        MOV   #0FFh,EXP2
        OR    FLAGS,MAN2MSB             ;Set sign bit of result.
        POP   FLAGS                     ;Restore registers to original
                                        ;values.
        POP   RSLT1
        POP   R0
        RTS                             ;Exit fp_mul

UNDERFLOW                               ;Result of multiplication is
                                        ;underflow.
        CLR   MAN2LSB                   ;Store results in OP2 registers.
        CLR   MAN2MSB
        CLR   EXP2
        POP   FLAGS                     ;Restore registers to original
                                        ;values.
        POP   RSLT1
        POP   R0
        RTS                             ;Exit fp_mul
```


PETITIONER ECOBEE
EX. 1010

```
CHK_UNDER                               ;Addition of exponents has
                                        ;underflowed.

        BTJZ  #0FFh,EXP2,UNDERFLOW      ;If exponent is not FF, then the
                                        ;exponent has definitely
                                        ;underflowed.

        SBIT1 UNDER_BIT                 ;Set bit to indicate that an
                                        ;underflow is possible if not
                                        ;corrected at end of multiplication
                                        ;routine.

MULTIPLY
        PUSH  R1                        ;Save value of B register.
        MPY   MAN1LSB,MAN2LSB           ;Start multiplying.
        MOV   A,RSLT1
        MPY   MAN1MSB,MAN2LSB
        CLR   MAN2LSB                   ;MAN2LSB = LSB of mantissa product.
        ADD   R1,RSLT1
        ADC   R0,MAN2LSB
        MPY   MAN1LSB,MAN2MSB
        CLR   MAN1LSB                   ;Since MAN1LSB is not needed anymore,
                                        ;use it as temporary storage during
                                        ;the multiplication process.
        ADD   R1,RSLT1
        ADC   R0,MAN2LSB
        ADC   #0,MAN1LSB
        MPY   MAN1MSB,MAN2MSB
        ADD   R1,MAN2LSB
        ADC   R0,MAN1LSB
        POP   R1                        ;Restore value of B register.

DONE_MULT
        JBIT0 IMPLIED_ONE,JUSTIFY       ;If result has no implied one, need
                                        ;to justify result.
        BTJZ  #0FFh,EXP2,INCEXP         ;If exponent is not FFh, then
                                        ;increment will not cause
        JMP   OVERFLOW                  ;overflow.

JUSTIFY JBIT1 UNDER_BIT,UNDERFLOW       ;Previous underflow will not be
                                        ;corrected, so result is underflow.
        RL    RSLT1                     ;Justify result to add implied one.
        RLC   MAN2LSB
        RLC   MAN1LSB
        DEC   EXP2                      ;Value of exponent does not need to
                                        ;be changed, so decrement here to
                                        ;make up for next INC instruction.

INCEXP  INC   EXP2

SET_RESULTS                             ;Result of multiplication is in
                                        ;range.
        MOV   MAN1LSB,MAN2MSB           ;Store results in OP2 registers.
        OR    #07Fh,FLAGS               ;Set FLAGS bits except for sign bit.
        AND   FLAGS,MAN2MSB             ;Set sign bit.  LSB is in correct
                                        ;place from multiply routine.
        POP   FLAGS                     ;Restore registers to original
                                        ;values.
        POP   RSLT1
        POP   R0
        RTS                             ;Exit fp_mul
```


PETITIONER ECOBEE
EX. 1010

Floating Point Increment / Decrement

```
;Rev.1.0

;Function name   -    $fp_inc,$fp_dec

;
;Purpose         -    1) Increment a floating point number,
;                         i.e. add a 1.0 to it.
;
;                         OP1 + 1.0
;
;                      2) Decrement a floating point number,
;                         i.e. subtract 1.0 from it.
;
;                         OP1 - 1.0
;

;Registers used  -     Register       Before                 After
;                    -------------------------------------------------------
;                        Status |        XX           |      Modified
;
;                          R17  |   OP1 exponent      |   Result exponent
;                          R18  |   OP1 mantissa MSB  |   Result mantissa MSB
;                          R19  |   OP1 mantissa LSB  |   Result mantissa LSB
;

;Size                   180 Bytes
;

;Stack space            4 Bytes
;

;Notes           -    1) Incrementing or decrementing a number with an
;                         exponent greater than or equal to 90 will have no
;                         effect.
;
;                      2) Incrementing or decrementing a number with an
;                         exponent less than or equal to 71 will have no
;                         effect.

;
msb2     .equ    r15
lsb2     .equ    r16
exp1     .equ    r17
msb1     .equ    r18
lsb1     .equ    r19
sign     .dbit   7,r0                  ;Flag to indicate whether to add or
                                       ;subtract numbers as a result of
                                       ;math.

decflag  .dbit   0,r0                  ;1=increment, 0=decrement.
         .global $fp_inc
         .global $fp_dec

$fp_dec  .text   7000h                 ;Entry point for decrement.
         push    a                     ;Save A register.
         mov     #80h,a                ;Complement the sign bit and set all
         xor     msb1,a                ;other bits of msb1=1.
         or      #07fh,a               ;
         sbit0   decflag               ;Set flag to indicate decrement op.
         jmp     $1
```


PETITIONER ECOBEE
EX. 1010

```
$fp_inc                                 ;Entry point for increment.
        push    a                       ;Save A register.
        mov     msb1,a                  ;Move msb1 to A register and set every
        or      #07fh,a                 ;bit except sign bit.

$1      cmp     #90h,exp1               ;Check to see if 1.0 is insignificant
        jhs     done                    ;compared with size of OP1.  Exit if
                                        ;OP1 will not change.
        cmp     #71h,exp1               ;Check to see if OP1 is insignificant
        jhs     size_ok                 ;compared with 1.0.
        mov     #80h,exp1               ;If so, result=1.0 or -1.0.
        clr     lsb1
        jbit0   decflag,$5              ;Is it a decrement operation?
        clr     msb1                    ;No, set result to 1.0.
        jmp     done                    ;

$5      mov     #080h,msb1              ;Yes, set result to -1.0.

done    pop     a
        rts

size_ok push    b                       ;Save registers that will be modified.
        push    msb2
        push    lsb2
        or      #80h,msb1               ;Set the implied one.
        mov     exp1,b                  ;Calculate number of spaces needed to
        sub     #80h,b                  ;shift number to align mantissas.
        jc      greater                 ;If exp1>#80h then OP1>1.0: adjust
                                        ;OP2.
        compl   b                       ;Take absolute value of exponent diff.
        mov     #80h,exp1               ;Set the exponent.

loop    clrc
        rrc     msb1                    ;Adjust OP1 so that it has the same
        rrc     lsb1                    ;exponent as OP2.  This is necessary
        djnz    b,loop                  ;for the two numbers to be added.
        btjo    #80h,a,subt             ;Choose whether you need to add or
                                        ;subtract numbers based on sign of
                                        ;numbers and whether you are
                                        ;incrementing or decrementing.
        add     #80h,msb1               ;Need to add numbers.  Add one to OP1.

done2   jbit1   decflag,$4              ;If a decrement is in progress,
        xor     #80h,a                  ;flip the sign of the result.
        sbit1   decflag

$4      and     a,msb1                  ;Set the sign bit according to the
                                        ;result.

done3   pop     lsb2                    ;Restore registers and exit.
        pop     msb2
        pop     a
        pop     b
        rts

subt    sbit0   sign                    ;The result is positive. (OP1 is less
        sub     #80h,msb1               ;than 1.0)  The operands have already
        inv     msb1                    ;been aligned to have the same
        compl   lsb1                    ;exponent.  Subtract 1 from OP1 and
        adc     #0,msb1                 ;invert the MSB and complement the LSB
                                        ;to get the absolute value.
```


PETITIONER ECOBEE
EX. 1010

```
adjust   dec     exp1                ;Shift the mantissa and adjust the
         clrc                        ;exponent until an implied one is set.
         rlc     lsb1
         rlc     msb1
         jpz     adjust
         jmp     done2

greater  clr     lsb2                ;OP1 is greater than 1.  Shift 1 so it
         clr     msb2                ;has the same exponent as OP1. If the
         cmp     #07h,b              ;exponents differ by < 7, then only
                                     ;MSB is affected.  Otherwise, implied
         jle     msb_only            ;one will roll on into LSB.
         sub     #07h,b              ;Calculate number of shifts needed.
         setc                        ;Since implied 1 will roll all the
$2       rrc     lsb2                ;way through the MSB, go ahead and
         djnz    b,$2                ;subtract 7 from number of shifts
         jmp     calc                ;needed and start with LSB.

msb_only inc     b                   ;Adjust to 1 needs less than 7 shifts,
         setc                        ;so only the MSB will be affected.

$3       rrc     msb2
         djnz    b,$3

calc     btjo    #80h,a,subtr        ;If the sign flag is negative,operands
                                     ;actually need to be subtracted.
         add     lsb2,lsb1           ;Sign flag is positive, so add
                                     ;OP1+1.0.
         adc     msb2,msb1

chkadj   jnc     done2               ;If carry occurs, need to roll back
         rrc     msb1                ;mantissa and increment exponent.
         rrc     lsb1
         inc     exp1
         jmp     done2

subtr    sub     lsb2,lsb1           ;Subtract mantissa2 - mantissa1.
         sbb     msb2,msb1
         jn      done2               ;Implied 1 is present.  Do not adjust.
         jnz     adjust              ;If MSBs are not equal, adjust.
         or      #0h,lsb1            ;MSBs are equal, check to see if
         jnz     adjust              ;LSBs are equal.  If not, adjust.
         clr     exp1                ;Mantissas are zero, so it is a
         jmp     done3               ;floating point zero.
```


PETITIONER ECOBEE
EX. 1010

Floating Point Number Test

```
;Rev.1.0
;Function name   -    $fp_tst
;

;Purpose         -    Perform a test of the floating point number, similar
;                      to the hardware TST instruction for the A and B
;                      registers.
;
;Registers used  -     Register       Before                 After
;                   -----------------------------------------------------
;                       Status |        XX           |    Set on result
;
;                         R17  |   OP1 exponent      |   OP1 exponent
;                         R18  |   OP1 mantissa MSB  |       Modified
;                         R19  |   OP1 mantissa LSB  |   OP1 mantissa LSB
;

;Size                  22 bytes
;

;Stack space           None
;

;Notes           -    1) The output will be the new contents of the status
;                      bits C, N, Z, and V.
;
;                      C = 0.
;                      V = 0.
;                      N = sign bit of the floating point number.
;                      Z = 1, if the floating point number is ZERO.
;                        = 0, otherwise.
;
;                      2) This routine is the same as a call to $fp_cmp,
;                      with OP1 = ZERO and OP2 = the number to test.
exp1    .equ     r17
msb1    .equ     r18
lsb1    .equ     r19

        .global  $fp_tst

$fp_tst  mov     msb1,msb1             ;Test the MSB.  If negative, return
         jn      done                  ;and status register will be set
                                       ;correctly.
         btjo    #0ffh,exp1,$1         ;Check for zero.
         btjo    #0ffh,lsb1,$1
         btjo    #0ffh,msb1,$1

done     rts                           ;Result is zero. Status reg is
                                       ;correct.

$1       mov     #01h,msb1             ;Number is not negative and not zero,
         rts                           ;so it must be positive. Do a dummy
                                       ;move to set status flags correctly.
```


PETITIONER ECOBEE
EX. 1010

Floating Point Number Negation

```
;Rev.1.0
;Function name   -    $fp_neg
;
;Purpose         -    Perform the sign negation of a floating point number
;
;                      -OP1
;
;Registers used  -     Register       Before                 After
;                   -----------------------------------------------------
;                       Status |        XX           |   Set on result MSB
;
;                         R17  |   OP1 exponent      |  Result exponent
;                         R18  |   OP1 mantissa MSB  |  Result mantissa MSB
;                         R19  |   OP1 mantissa LSB  |  Result mantissa LSB
;

;Size                 17 Bytes
;

;Stack space          None
;

;Notes            -   Some special considerations for floating point
;                     negation are:
;
;                     -ZERO   =    ZERO
exp     .equ    r17
msb     .equ    r18
lsb     .equ    r19

        .global $fp_neg

$fp_neg
        .text   7000h
        btjo    #0ffh,exp,negate   ;Check for zero.
        btjo    #0ffh,msb,negate
        btjo    #0ffh,lsb,negate

zero    rts                        ;Number was zero, return.

negate  xor     #80h,msb           ;Toggle sign bit if not zero.
        rts
```


PETITIONER ECOBEE
EX. 1010

Floating Point To Signed 8-Bit Integer Conversion

```
;Rev.1.0

;Function name   -    $fp_ftoi
;

;Purpose         -    Convert a 24-bit signed floating representation
;                      of a number to an equivalent 8-bit signed integer
;                      representation.
;

;Registers used  -     Register       Before                 After
;                    -------------------------------------------------------
;                        Status |        XX           |      Modified
;                           A   |        XX           |       Result
;
;                          R17  |  OP2 exponent       |  OP2 exponent
;                          R18  |  OP2 mantissa MSB   |  OP2 mantissa MSB
;                          R19  |  OP2 mantissa LSB   |  OP2 mantissa LSB
;

;Size                  45 bytes
;

;Stack space           1 byte
;

;Notes           -   1) The fractional part of the float is discarded.
;
;                    2) If the value of the integral part of the float cannot
;                    be represented by the signed int, the behavior is
;                    undefined.
;
;                    3) A float value of ZERO will be converted to 0.
expon   .equ    r17
fsign   .dbit   7,r18

        .global $fp_ftoi
        .text   7000h

$fp_ftoi                        ;Floating point to integer conversion.
        btjo    #80h,expon,$1   ;If exponent < 1, then number is too small.
        clr     a               ;Set result = 0 and return.
        rts

$1      cmp     #87h,expon      ;Check for too big (>127).
        jhs     big
        mov     r18,a           ;Put MSB into A reg to be adjusted.
        or      #80h,a          ;Set the implied one.
        push    expon           ;Save true value of exponent.
        sub     #87h,expon      ;Exponent – 87h = # of shifts needed to
        compl   expon           ;represent number as 7 binary digit number.

loop    clrc
        rrc     a               ;Rotate A as needed.  Loop until implied 1 is
        djnz    expon,loop      ;in position.
        jbit0   fsign,pos       ;Check for minus sign.
        compl   a               ;Take the 2’s complement of integer to set
                                ;sign.

pos     pop     expon           ;Restore the original exponent.
        rts

big     jbit1   fsign,bigminus  ;Number is too big to be represented as a
        mov     #7fh,a          ;signed integer. Set result to max positive
                                ;value.
        rts
```


PETITIONER ECOBEE
EX. 1010

```
bigminus                        ;Number is too small to be represented as a
          mov   #80h,a          ;signed integer. Set result to max negative
          rts                   ;value.
```


PETITIONER ECOBEE
EX. 1010

Floating Point To Signed Long (16-Bit) Integer Conversion

```
;Rev.1.0

;Function name   -    $fp_ftol
;

;Purpose         -    Convert a 24-bit signed floating representation
;                      of a number to an equivalent 16-bit signed integer
;                      representation.
;

;Registers used  -     Register       Before                 After
;                    -------------------------------------------------------
;                        Status |        XX           |      Modified
;                           A   |        XX           |   Signed integer MSB
;                           B   |        XX           |   Signed integer LSB
;
;                          R17  |   OP1 exponent      |   OP1 exponent
;                          R18  |   OP1 mantissa MSB  |   OP1 mantissa MSB
;                          R19  |   OP1 mantissa LSB  |   OP1 mantissa LSB
;

;Size                 56 bytes
;

;Stack space          1 byte
;

;Notes           -    1) The fractional part of the float is discarded.
;
;                      2) If the value of the integral part of the float cannot
;                      be represented by the signed long int, the behavior is
;                      undefined.
;
;                      3) A float value of ZERO will be converted to 0.

expon   .equ    r17
fsign   .dbit   7,r18

        .global $fp_ftol
        .text   7000h

$fp_ftol                        ;Floating point to long integer conversion.
        btjo    #80h,expon,$1   ;If exponent < 1, then number is too small.
        clr     a               ;Set result = 0 and return.
        clr     b
        rts

$1      cmp     #8fh,expon      ;Check for too big (>32767)
        jhs     big
        mov     r19,b
        mov     r18,a
        or      #80h,a          ;Set the implied one
        push    expon           ;Save true value of exponent.
        sub     #8fh,expon      ;Exponent – 8Fh = # of shifts needed to
                                ;represent
        compl   expon           ;number as binary 15 digit number.

loop    clrc
        rrc     a               ;Rotate A and B as needed. Loop until implied 1
        rrc     b               ;is in position.
        djnz    expon,loop
        jbit0   fsign,pos       ;Check for minus sign.
        inv     a               ;Take the 2’s complement of integer to set
                                ;sign.
        compl   b
        adc     #0,a
```


PETITIONER ECOBEE
EX. 1010

```
pos     pop    expon
        rts

big     jbit1  fsign,bigminus
        mov    #0ffh,b        ;Number is too big to be represented as a
                              ;signed integer.
        mov    #7fh,a         ;Set result to max positive value.
        rts

bigminus
        mov    #0,b           ;Number is too small to be represented as a
        mov    #80h,a         ;signed integer.  Set result to max negative
        rts                   ;value.
```


PETITIONER ECOBEE
EX. 1010

Floating Point To Unsigned 8-Bit Integer Conversion

```
;Rev.1.0

;Function name   -    $fp_ftou
;

;Purpose         -    Convert a 24-bit signed floating representation
;                      of a number to an equivalent 8-bit unsigned integer
;                      representation.
;

;Registers used  -     Register       Before                 After
;                    -------------------------------------------------------
;                        Status |        XX           |      Modified
;                           A   |        XX           |       Result
;
;                          R17  |  OP1 exponent       |  OP1 exponent
;                          R18  |  OP1 mantissa MSB   |  OP1 mantissa MSB
;                          R19  |  OP1 mantissa LSB   |  OP1 mantissa LSB
;

;Size                 35 Bytes
;

;Stack space          1 Byte
;

;Notes            -   1) The fractional part of the float is discarded.
;
;                      2) If the value of the integral part of the float cannot
;                      be represented by the unsigned int, the behavior is
;                      undefined.
;
;                      3) A float value of ZERO will be converted to 0.
expon   .equ    r17
fsign   .dbit   7,r18

        .global $fp_ftou
        .text   7000h

$fp_ftou                        ;Floating point to unsigned integer conversion.
        btjo    #80h,expon,$1;If exponent<1, then number is too small.
        clr     a               ;Set result = 0 and return.
        rts

$1      cmp     #88h,expon      ;Check for too big (>255).
        jhs     big
        mov     r18,a
        or      #80h,a          ;Set the implied one.
        push    expon           ;Save true value of exponent.
        sub     #87h,expon      ;Exponent-87h = # of shifts needed to represent
        compl   expon           ;number as 7 binary digit number.
        jz      done

loop    clrc
        rrc     a               ;Rotate A as needed.  Loop until implied 1 is
        djnz    expon,loop      ;in position.

done    pop     expon
        rts

big     mov     #0ffh,a         ;Number is too big to be represented as a signed
        rts                     ;integer. Set result to max positive value.
```


PETITIONER ECOBEE
EX. 1010

Floating Point To Unsigned Long (16-Bit) Integer Conversion

```
;Rev.1.0

;Function name   -    $fp_ftoul
;

;Purpose         -    Convert a 24-bit signed floating representation
;                     of a number to an equivalent 16-bit unsigned integer
;                     representation.
;

;Registers used  -     Register       Before                 After
;                   ---------------------------------------------------------
;                       Status |        XX           |      Modified
;                          A   |        XX           |   Signed integer MSB
;                          B   |        XX           |   Signed integer LSB
;
;                         R17  |   OP1 exponent      |   OP1 exponent
;                         R18  |   OP1 mantissa MSB  |   OP1 mantissa MSB
;                         R19  |   OP1 mantissa LSB  |   OP1 mantissa LSB

;

;Size                 41 bytes
;

;Stack space          1 byte

;Notes           -    1) The fractional part of the float is discarded.
;
;                     2) If the value of the integral part of the float
;                     cannot be represented by the unsinged signed long int,
;                     the behavior is undefined.
;
;                     3) A float value of ZERO will be converted to 0.
expon   .equ    r17
fsign   .dbit   7,r18

        .global $fp_ftoul
        .text   7000h

$fp_ftoul                   ;Floating point to unsigned long integer.
        btjo    #80h,expon,$1;If exponent < 1, then number is too small.
        clr     a           ;Set result = 0 and return.
        clr     b
        rts

$1      cmp     #90h,expon   ;Check for too big (> 65535)
        jhs     big
        mov     r19,b
        mov     r18,a
        or      #80h,a       ;Set the implied one.
        push    expon        ;Save true value of exponent.
        sub     #8fh,expon   ;Exponent-8fh = # of shifts needed to represent
        compl   expon        ;number as 7 binary digit number.
        jz      ok

loop    clrc
        rrc     a            ;Rotate A and B as needed.
        rrc     b
        djnz    expon,loop   ;Loop until implied 1 is in position.

ok      pop     expon
        rts

big     mov     #0ffh,b      ;Number is too big to be represented as a signed
        mov     #0ffh,a      ;integer.  Set result to max positive value.
        rts
```


PETITIONER ECOBEE
EX. 1010

Signed 8-Bit Integer To Floating Point Conversion

```
;Rev.1.0

;Function name   -    $fp_itof
;

;Purpose         -    Convert an 8-bit signed integer representation
;                      of a number to an equivalent 24-bit signed floating
;                      point representation.
;

;Registers used  -     Register       Before                 After
;                    -------------------------------------------------------
;                        Status |        XX           |    Set on Result
;                           A   |   Signed integer    |      Modified
;
;                          R17  |        XX           |  Result exponent
;                          R18  |        XX           |  Result mantissa MSB
;                          R19  |        XX           |  Result mantissa LSB
;
;Size                   34 bytes
;

;Stack space           None
;

;Note            -     A zero integer value will convert to the
;                      floating point ZERO value.
expon   .equ    r17
isign   .dbit   7,r0
fsign   .dbit   7,r18

        .global $fp_itof
        .text   7000h

$fp_itof                        ;Integer to floating point conversion.
        clr     r18             ;Initialize fp to zero.
        clr     r19
        mov     #87h,expon      ;Initialize exponent for 7 binary digit
number.
        btjo    #0ffh,a,nonzero;Check to make sure the number to be converted
                                ;is not zero before we go any further.

zero    clr     expon           ;Set result to fp zero.
        rts

nonzero jp      pos             ;Test for negative integer.
        sbit1   fsign           ;Set the implied 1.
        compl   a               ;Take 2s complement to get absolute value.
        jn      ok              ;Check if implied 1 is in position.

pos     dec     expon           ;Implied 1 is not in posistion.  Rotate
        clrc                    ;mantissa and decrement exponent until 1
                                ;is in right place.
        rlc     a
        jp      pos

ok      or      #07Fh,r18       ;Set the sign bit of the MSB.
        and     a,r18
        rts
```


PETITIONER ECOBEE
EX. 1010

Signed Long (16-Bit) Integer To Floating Point Conversion Comparison

```
;Rev.1.0

;Function name   -    $fp_ltof
;

;Purpose         -    Convert a 16-bit signed long integer representation
;                     of a number to an equivalent 24-bit signed floating
;                     point representation.
;

;Registers used  -     Register       Before                 After
;                   ---------------------------------------------------------
;                       Status |         XX          |   Set on result MSB
;                          A   |  Signed integer MSB |       Modified
;                          B   |  Signed integer LSB |       Modified
;
;                         R17  |         XX          |  Result exponent
;                         R18  |         XX          |  Result mantissa MSB
;                         R19  |         XX          |  Result mantissa LSB
;
;
;Size                 42 Bytes
;
;Stack space          None
;

;Note           -     A zero long integer value will convert to the
;                     floating point ZERO value.
expon   .equ    r17
isign   .dbit   7,r0
fsign   .dbit   7,r18

        .global $fp_ltof
        .text   7000h

$fp_ltof                        ;Long integer to floating point conversion.
        clr     r18
        mov     #8fh,expon      ;Set resulting exponent.
        btjo    #0ffh,a,nonzero;Test if MSB <> 0.

zero    btjo    #0ffh,b,pos     ;Test if LSB <> 0.  Since MSB = 0, value must
                                ;be positive if not zero.
        clr     expon           ;Long integer is zero.  Return fp = zero.
        clr     r19
        rts

nonzero jp      pos             ;Test for negative integer.
        sbit1   fsign           ;Integer is negative, so set sign bit of
                                ;result.
        inv     a               ;Invert MSB and take 2's complement of LSB to
        compl   b               ;get absolute value of mantissa.
        adc     #0,a
        jn      ok              ;Check if implied 1 is in position.

pos     dec     expon           ;Rotate mantissa and decrement exponent until
        clrc                    ;implied 1 is in position.
        rlc     b
        rlc     a
        jpz     pos

ok      and     #07fh,a         ;Mask out implied one
        mov     b,r19
        or      a,r18           ;or data with the sign bit.
        rts
```


PETITIONER ECOBEE
EX. 1010

Unsigned Long (16-Bit) Integer To Floating Point Conversion

```
;Rev.1.0

;Function name   -    $fp_ultof
;

;Purpose         -    Convert a 16-bit unsigned long integer representation
;                      of a number to an equivalent 24-bit signed floating
;                      point representation.
;

;Registers used  -     Register       Before                 After
;                    -------------------------------------------------------
;                        Status |        XX            | Set on status of MSB
;                           A   |    Integer MSB       |         XX
;                           B   |    Integer LSB       |         XX
;
;                          R17  |         XX           |  Result exponent
;                          R18  |         XX           |  Result mantissa MSB
;                          R19  |         XX           |  Result mantissa LSB
;
;
;Size                  32 Bytes
;

;Stack space           None
;

;Note            -     A zero long integer value will convert to the
;                      floating point ZERO value.
expon   .equ    r17

        .global $fp_ultof
        .text   7000h

$fp_ultof                       ;Unsigned long integer to floating point.
        mov     #08fh,expon     ;Set exponent of result.
        btjo    #0ffh,a,nonzero;Test if MSB <> 0.

zero    btjo    #0ffh,b,pos     ;Test if LSB <> 0.
        clr     expon           ;Number is zero.  Set result to fp zero.
        clr     r18
        clr     r19
        rts

nonzero jn      ok              ;If MSB already has implied one, then done.

pos     dec     expon           ;MSB was zero, so rotate mantissa and
        clrc                    ;decrement exponent to shift implied 1 into
                                ;place.
        rlc     b
        rlc     a
        jpz     pos             ;Loop until implied 1 is in position.

ok      and     #07fh,a         ;Set sign of result and save MSB.
        mov     a,r18
        mov     b,r19           ;Save LSB.
        rts
```


PETITIONER ECOBEE
EX. 1010

Unsigned 8-Bit Integer To Floating Point Conversion

```
;Rev.1.0

;Function name   -    $fp_utof
;

;Purpose         -    Convert an 8-bit unsigned integer representation
;                      of a number to an equivalent 24-bit signed floating
;                      point representation.
;

;Registers used  -     Register       Before                 After
;                    -------------------------------------------------------
;                        Status |        XX           | Set on status of MSB
;                           A   |    Integer MSB      |      Modified
;                           B   |    Integer LSB      |     Integer LSB
;
;                          R17  |         XX          |  Result exponent
;                          R18  |         XX          |  Result mantissa MSB
;                          R19  |         XX          |  Result mantissa LSB
;

;Size                  26 Bytes
;

;Stack space           None
;

;Note            -     A zero integer value will convert to the
;                      floating point ZERO value.
expon   .equ    r17

        .global $fp_utof
        .text   7000h

$fp_utof                        ;Unsigned integer to floating point
                                ;conversion.
        clr     r19             ;Initialize MSB.
        mov     #87h,expon      ;Initialize the exponent.
        btjo    #0ffh,a,nonzero;Test to see if integer is zero.

zero    clr     r18             ;Integer is zero, result will be fp zero.
        clr     expon
        rts

nonzero jn      ok              ;Check if implied 1 is in position.

pos     dec     expon           ;Implied 1 is not in position, rotate and
        clrc                    ;decrement until implied one is in position.
        rlc     a               ;
        jp      pos             ;

ok      and     #07fh,a         ;Set sign of result.
        mov     a,r18
        rts
```


PETITIONER ECOBEE
EX. 1010

Part II
Software Routines

Part II contains three sections:

Arithmetic 7

Memory Operations 61

Specific Functionality 83

PETITIONER ECOBEE
EX. 1010

PETITIONER ECOBEE
EX. 1010

Clear RAM

Microcontroller Products—Semiconductor Group
Texas Instruments

PETITIONER ECOBEE
EX. 1010

PETITIONER ECOBEE
EX. 1010

Clear RAM

This routine clears all of the internal RAM registers. It can be used at the beginning of a program to initialize the first 256 bytes of RAM to a known value. Registers A and B have the following functions in this routine:

- Register A holds the initialization value.
- Register B serves as the index into the RAM.

Routine

```
                    .TEXT 7000h          ;Absolute start address
CLEAR               MOV #254,B           ;Number of registers to clear less 2
                    CLR A                ;Load the initialization
                                         ;value of zero
LOOP                MOV A,1[B]           ;Clear the location indexed
                                         ;by B+1
                    DJNZ B,LOOP          ;Loop until all RAM is
                                         ;cleared
                                         ;A and B end up as zeros.
```


PETITIONER ECOBEE
EX. 1010

PETITIONER ECOBEE
EX. 1010

RAM Self-Test on the TMS370

Microcontroller Products—Semiconductor Group
Texas Instruments

PETITIONER ECOBEE
EX. 1010

PETITIONER ECOBEE
EX. 1010

RAM Self-Test

This routine performs a simple alternating 0/1 test on RAM locations R3–R255 by writing an AA,55 pattern to this RAM space and then checking the RAM for this pattern. The inverted pattern is then written to RAM and rechecked. Finally, the entire RAM is cleared. If an error is found, a bit is set in the flag register. The error flag bit should be cleared before the routine is started.

Table 1. Register Values

Register	Before	After: No Error	After: Error
A	XX	0	?
B	XX	0	?
FLAG	XX	0	Bit 0 = 1

NOTE:

- Passing data: none
- Registers affected: all
- Ending data: all registers = 0; bit 0 in FLAG = 1 if error was found

Routine

```
        .TEXT 7000H    ;Absolute start address
FLAG    .EQU  R2      ;Error register
        MOV   #55h,A   ;Start RAM fill with 55h
FILLR   MOV   #0FDh,B  ;Set RAM start address – 3
                       ;(don't change registers A, B, or R2)
FILL1   MOV   A,*2[B]  ;Fill RAM with AA to 55 pattern
        RR    A        ;Change to beginning number
        DJNZ  B,FILL1  ;Fill entire RAM with pattern
        RR    A        ;Change to beginning number
        MOV   #0FDh,B  ;Refresh index
COMPAR  CMP   *2[B],A  ;Check for errors
        JNE   ERROR    ;Exit if values don't match
        RR    A        ;Change from 55 to AA to 55
        DJNZ  B,COMPAR ;Check the entire RAM
        CLRC           ;Is reg A now 55, AA or 00?
        JN    FILLR    ;=AA, change to opposite pattern
        JZ    EXIT     ;=00,
FILL0   CLR   A        ;=55,clear the ram now
        JMP   FILLR    ;Repeat the fill and check routine
ERROR   OR    #1,FLAG  ;Set bit zero in the flag
                       ;register
EXIT    .EQU $         ;Continue program here
```


PETITIONER ECOBEE
EX. 1010

PETITIONER ECOBEE
EX. 1010

ROM Checksum on the TMS370

Microcontroller Products—Semiconductor Group
Texas Instruments

PETITIONER ECOBEE
EX. 1010

PETITIONER ECOBEE
EX. 1010

ROM Checksum

This routine checks the integrity of a 4K-byte ROM by performing a checksum on the entire ROM. All ROM bytes from 7002h to 7FDFh are added together in a 16-bit word. The sum is checked against the value at the beginning of the ROM (7000h, 7001h). If the values don't match, then an error has occurred, and a bit is set in a register. The error flag bit should be cleared before the start of the routine. This routine can easily be modified for other ROM sizes.

NOTE:
Addresses 7FE0h through 7FEBh are reserved for TI use only and should not be used in a checksum calculation.

Table 1. Register and Function Values

Register	Before	After: No Error	After: Error
A	XX	X	X
B	XX	X	X
R2	XX	CHKSUM MSbyte	CHKSUM MSbyte
R3	XX	CHKSUM LSbyte	CHKSUM LSbyte
R4	XX	70h	70h
R5	XX	01h	01h
R6	XX	FFh	FFh
R7	XX	FFh	FFh
FLAG	XX	Bit 1 = 0	Bit 1 = 1

PETITIONER ECOBEE
EX. 1010

Routine

```
          .TEXT 7000h       ;Absolute start address
FLAG      .EQU  R15         ;Error status
CHECKSUM  .EQU  12345       ;Value to be checked against
          .WORD CHECKSUM    ;Put correct checksum into
                            ;ROM
                            ;Other initialization
                            ;program here
ROMCHK    MOVW  #7FDFh,R5   ;Starting address (end of
                            ;memory)
          MOVW  #0FDDh,R7   ;Number of bytes to add + 1
          MOVW  #0,R3       ;Reset summing register
                            ;
ADDLOP    MOV   @R5,A       ;Get ROM byte
          ADD   A,R3        ;Add to 16-bit sum
          ADC   #0,R2       ;Add any carry
          INCW  #–1,R5      ;Decrement address
          INCW  #–1,R7      ;Decrement byte counter
          JC    ADDLOP      ;Continue until byte count
                            ;goes past 0
                            ;
          MOV   7000h,A     ;Compare MSbyte stored to
                            ;MSbyte sum
          CMP   A,R2        ;
          JNE   ERROR       ;Set error bit if different
          MOV   7001h,A     ;Compare LSbyte stored to
                            ;LSbyte sum
          CMP   A,R3        ;
          JEQ   EXIT        ;Set error bit if different
ERROR     OR    #2,FLAG     ;Set bit 1 in the flag
                            ;register
EXIT      .EQU  $           ;Continue program here
```


PETITIONER ECOBEE
EX. 1010

Table Search With the TMS370

Microcontroller Products—Semiconductor Group
Texas Instruments

PETITIONER ECOBEE
EX. 1010

PETITIONER ECOBEE
EX. 1010

Table Search

The CMPA (Compare Register A Extended) instruction efficiently performs table searches. In the following example, a 150-byte table is searched for a match with a 6-byte string.

The indexed addressing mode is used in this example and has the capability to search a 256-byte string, if needed. Register B alternates between a pointer into the 6-byte test string and a pointer into the longer table string.

Table 1. Register and Expression Functions

Register	Before	After	Function
A	XX	??	
B	XX	??	
R2	XX	??	Table length
TABLE	XX	no change	Long string in table
STRING	XX	no change	Target string, 6 bytes max

Routine

```
          .TEXT  7000h            ;Absolute start address
TABLE     .EQU   2000h            ;Start of data table in external RAM
STRING    .EQU   R10              ;Start of target string,
                                  ;6 bytes max
SEARCH    MOV    #150,R2          ;Table length = 150 bytes
LOOP1     MOV    #6,B             ;String length = 6 bytes
LOOP2     XCHB   R2               ;Swap pointers, long string in B
          DEC    B                ;Reduce index into table
          JNC    NOFIND           ;Table end? if so, no match found
          MOV    *TABLE[B],A      ;Load test character
          XCHB   R2               ;Swap pointers, string pointer in
          CMP    *STRING–1[B],A   ;Match?
          JNE       LOOP1         ;If not, reset string  pointer
                                  ;else test
          DJNZ   B,LOOP2          ;Next character
MATCH     .EQU   $                ;Match found
NOFIND    .EQU   $                ;No match found
```


PETITIONER ECOBEE
EX. 1010

PETITIONER ECOBEE
EX. 1010

Bubble Sort With the TMS370

Microcontroller Products—Semiconductor Group
Texas Instruments

PETITIONER ECOBEE
EX. 1010

PETITIONER ECOBEE
EX. 1010

Bubble Sort

This routine sorts up to 256 bytes using the bubble sort method. Longer tables can be sorted using the indirect addressing mode.

Table 1. Register Functions

Register	Function
A	Temporary storage register
B	Index into the RAM
R2	Holds flag to indicate a byte swap has been made

Routine

```
       .TEXT  7000h            ;Absolute start address
TABLE  .EQU   2000h            ;Start of data table in external RAM
FLAG   .EQU   R2               ;'Swap has been made' flag
SORT   CLR    FLAG             ;Reset swap flag
       MOV    #0FFh,B          ;Load table offset value
LOOP1  MOV    *TABLE[B],A      ;Look at entry in table
       CMP    *TABLE–1[B],A    ;Look at next lower byte
       JHS    LOOP2            ;If higher or equal, skip to next value
       INC    FLAG             ;Entry is not lower, set swap flag
       PUSH   A                ;Store upper byte
       MOV    *TABLE-1[B],A    ;Take lower byte
       MOV    A,*TABLE[B]      ;Put where upper was
       POP    A                ;Get the old upper byte
       MOV    A,*TABLE-1[B]    ;Put where the lower byte was
LOOP2  DJNZ   B,LOOP1          ;Loop until all the table is looked at
       BTJO   #0FFh,FLAG,SORT  ;If swap was made, then resweep table
       RTS                     ;If no swap was made, then table is done
```


PETITIONER ECOBEE
EX. 1010

PETITIONER ECOBEE
EX. 1010

Part II
Software Routines

Part II contains three sections:

Arithmetic 7

Memory Operations 61

Specific Functionality 83

PETITIONER ECOBEE
EX. 1010

PETITIONER ECOBEE
EX. 1010

Routine to Read a 16-Key Keyboard

Microcontroller Products—Semiconductor Group
Texas Instruments

PETITIONER ECOBEE
EX. 1010

PETITIONER ECOBEE
EX. 1010

Keyboard Scan

This routine reads a 16-key keyboard through port D, returns the hex digit of the key, and debounces the key to avoid noise. A valid-key flag is set when a new key is found.

Figure 1. Keyboard Scan Connections to Port D

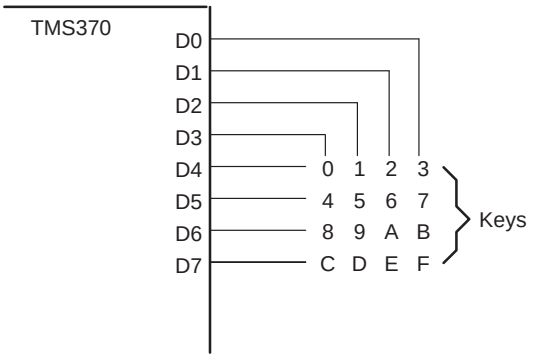

Table 1. Register Properties

Register	Before	After NOKEY	After NEWKEY	Functions/Comments
A	dc†	0	Column	Temporary
B	dc	0	Row	Temporary
R2	dc	16	Key number	Temporary storage for key value
R3	Old key value	0FFh	Key number	Contains key pressed
R4	Debounced	0	0	Debounce counter, old key or new
R5	General bits	?xxxxxxx0	?xxxxxxx1	One bit of register is 1 if new key

† dc = don't care.

PETITIONER ECOBEE
EX. 1010

Routine

```
          .TEXT  07000h
FLAG      .EQU   R2            ; "Swap has been made" flag
DDIR      .EQU   P02F          ; Port D data direction register
DDATA     .EQU   P02E          ; Port D data register
;
;          THESE ASSIGNMENTS NEED TO BE DONE
;         IN THE MAIN INITIALIZATION
;
START     MOV    #00,DDATA     ; Clear these registers
          MOV    #0,R5         ; Clear register that says keyfound
          MOV    #0F0h,DDIR    ; Set port D data direction for
                               ; 4 outputs and 4 inputs
;
; THIS IS THE BEGINNING OF THE KEYBOARD SCAN ROUTINE
;
GETKEY    MOV    #8,B          ; Initialize row pointer
          CLR    R2            ;
LOOP      RLC    B             ; Select next row
          JC     NOKEY         ; Last row? if so no key was found.
          ADD    #4,R2         ; Add number of keys/row to key accumulator
          MOV    B,DDATA       ; Activate row
          MOV    DDATA,A       ; Read columns
          MOV    #0,DDATA      ; Clear row
          AND    #0Fh,A        ; Isolate column data
          JZ     LOOP          ; If no keys found, check next row
KEYLSB    DEC    R2            ; Decrement column offset
          RRC    A             ; Find column
          JNC    KEYLSB        ; If not column then, try again
NEWKEY    CMP    R2,R3         ; Is the new key the same as the old key?
          JEQ    DEBONS        ; If it is, then debounce it
          MOV    R2,R3         ; Brand new key, move it to current
                               ; key value
          MOV    #07,R4        ; Set up debounce count, debounce 7 times
DEBONS    CMP    #2,R4         ; Is the debounce count 1 or 0?
          JL     GOODKY        ;
          DJNZ   R4,GETKEY     ; If greater than 1 then debounce
                               ; is not finished; go read key again
GOODKY    BTJZ   #01,R4,NONEW  ; If debounce count = 0, key was here
                               ; last time
          DEC    R4            ; If it was one, this is a new
                               ; valid key, make old key
          OR     #1,R5         ; Set new key flag in Bit register
          RTS                  ; New key found; return to main
NOKEY     MOV    #0FFh,R3      ; New key not found; set key value
                               ; to unique value of FFh
NONEW     RTS                  ; Jump to here means it is same key
                               ; held down, doing nothing
```


PETITIONER ECOBEE
EX. 1010

DTMF Generation With the TMS370

Microcontroller Products—Semiconductor Group
Texas Instruments

PETITIONER ECOBEE
EX. 1010

PETITIONER ECOBEE
EX. 1010

DTMF Generator

The TMS370 can be used to generate DTMF dialing. The following routine can be used to generate all 16 DTMF digits.

Routine

```
;*************************************************************************
;
;       .TITLE    "DTMF GENERATOR"
;*************************************************************************
;
;             *** DTMF GENERATOR ***
;          GENERATES ALL 16 DTMF DIGITS
;
;   CRYSTAL: 7.158MHZ (2X COLOR BURST)
;
;   OUTPUT: 4 BIT DATA TO THE LOW NIBBLE OF B-PORT
;   UPPER NIBBLE OF B-PORT IS  LEFT UNMODIFIED
;
;   B0 LSB
;   B1
;   B2
;   B3 MSB
;
;
;ENTRY POINTS:'CALLSETMID'
;                SET D/A OUTPUT TO THE MIDPOINT VOLTAGE
;                (DONE AUTOMATICALLY AFTER 'CALL DTMF')
;
;             'CALLDTMF'
;                GENERATE DTMF DIGIT IN TONE(0-3)
;                GENERATE TONE FOR DURATION IN TIMER/TIMER+1
;                START AT D/A MIDPOINT
;                ON EXIT-SET D/A TO MIDPOINT
;
;   TONE(0-3)DTMF(HZ)
;   -----------------
;   0      941/1336
;   1      697/1209
;   2      697/1336
;   3      697/1477
;   4      770/1209
;   5      770/1336
;   6      770/1477
;   7      852/1209
;   8      852/1336
;   9      852/1477
;   A      697/1633
;   B      770/1633
;   C      852/1633
;   D      941/1633
;   E      941/1209
;   F      941/1477
;
;*************************************************************************
;
TONE      .EQU   R020   ;BCD DTMF DIGIT IN BITS 0-3
;
PRT1      .EQU   R021   ;R22 R23  POINTER   FOR FREQUENCY 1
PRT2      .EQU   R024   ;R25 R26  POINTER   FOR FREQUENCY 2
CNT1      .EQU   R027   ;FREQUENCY 1 COUNT
ADJ1      .EQU   R028   ;FREQUENCY 1 ADJUST
```


PETITIONER ECOBEE
EX. 1010

```
CNT2      .EQU   R029          ;FREQUENCY 2 COUNT
ADJ2      .EQU   R02A          ;FREQUENCY 2 ADJUST
TIMER     .EQU   R02B          ;R32DIGIT DURATION: 1 = 100 µS
;
BPORT     .EQU   P026          ;I/O PORT
BDR       .EQU   P027          ;DATA DIRECTION REGISTER
;
;*************************************************************************
;
; CALCULATIONS:
;
; FREQ. = [(CNT,ADJ)/(# SAMPLES)] / 100.02794US
;
; CNT = INTEGER PART OF UPDATE RATE
; ADJ = FRACTION PART OF UPDATE RATE (NORMALIZED TO 256)
;
; # SAMPLES:  64
;
; CRYSTAL = 7.158 MHZ / 4
; 179 MACHINE CYCLES = 100.02794 µS
;
; DTMF FREQUENCY TIME CONSTANTS – CNT,ADJ
;
L1        .EQU   00476h        ;697 HZ
L2        .EQU   004EEh        ;770 HZ
L3        .EQU   00574h        ;852 HZ
L4        .EQU   00606h        ;941 HZ
;
H1        .EQU   007BDh        ;1209 HZ
H2        .EQU   0088Eh        ;1336 HZ
H3        .EQU   00975h        ;1477 HZ
H4        .EQU   00A74h        ;1633 HZ
;
          .SECT  “S1”,0F806h
;
DTMF      .EQU   $
          MOV    #00Fh,BDR     ;LOWER NIBBLE OF BPORT IS OUTPUT
;
; INITIALIZE DTMF POINTERS
;
          MOV    TONE,B        ;LOAD DIGIT INTO
          AND    #00Fh,B       ;LOWER 4 BITS OF B
          RL     B             ;MAKE
          RL     B             ;ADDRESS
          MOV    *DIGIT[B],A   ;LOAD
          MOV    A,CNT1        ;COUNT1
          MOV    *DIGIT+1[B],A ;LOAD
          MOV    A,ADJ1        ;ADJUST1
          MOV    *DIGIT+2[B],A ;LOAD
          MOV    A,CNT2        ;COUNT2
          MOV    *DIGIT+3[B],A ;LOAD
          MOV    A,ADJ2        ;ADJUST2
;
          MOVW   #TABLE,PRT1+1 ;POINT TO
          MOVW   #TABLE,PRT2+1 ;TABLE START
;
          MOV    BPORT,B       ;SET OUTPUT
          AND    #0F0h,B
          OR     #008h,B       ;TO D/A MIDPOINT
          MOV    B,BPORT
;
;*************************************************************************
;
```


PETITIONER ECOBEE
EX. 1010

```
; SINE WAVE UPDATE LOOP – 179 MACHINE CYCLES = 100 µS
;
; ADJ ADDED TO PREVIOUS ADJUSTMENT TO SINE TABLE
; CNT ADDED W CARRY TO PREVIOUS LSB OF 16 BIT SINE TABLE
; MSB OF 16 BIT ADDR FIXED
;
; REPEAT FOR EACH DTMF DIGIT
;
; DTMF: ADD SINE VALUES AT BOTH ADDRESSES
; SHIFT RIGHT (NORMALIZE)
; OUTPUT TO LOW NIBBLE OF BPORT
;
LOOP   .EQU   $
;
; DTMF FREQUENCY 1                                MACHINE CYCLES
;                                                 --------------
      ADD    ADJ1,PRT1+2      ; ADD ADJUSTMENT          9
      ADC    CNT1,PRT1+1      ; ADD COUNT               9
      AND    #03Fh,PRT1+1     ; 6-BIT ADDRESS           8
      MOV    *PRT1+1,A        ;                         9
      MOV    A,B              ;                         9
;
; DTMF FREQUENCY 2
;
      ADD    ADJ2,PRT2+2      ; ADD ADJUSTMENT          9
      ADC    CNT2,PRT2+1      ; ADD COUNT               9
      AND    #03Fh,PRT2+1     ; 6-BIT ADDRESS           8
      MOV    *PRT2+1,A        ; 9
      ADD    B,A              ; SUM INDECIES            8
      RRC    A                ; NORMALIZE               8
;
      TST    B                ; DELAY                   10
      TST    B                ; FOR LOOP                10
      TST    B                ; = 179                   10
      INV    B                ; MACHINE CYCLES          8
;
      MOV    BPORT,B          ;                         7
      AND    #0F0h,B          ;                         6
      OR     A,B              ;                         7
      MOV    B,BPORT          ;                         8
;
      INCW   #–1,TIMER+1      ;                         11
      JC     LOOP             ;                         7 (JMP TAKEN)
;                                                    -------
;                                                 TOTAL  179
;
SETMID .EQU   $
      MOV    BPORT,B          ; SET OUTPUT
      AND    #0F0h,B
      OR     #008h,B          ; TO D/A MIDPOINT
      MOV    B,BPORT
      RTS
;
;*************************************************************************
;
DIGIT  .EQU   $                ; DTMF DIGITS
;
; DATA LX,HY LX = LO FREQ TABLE INCREMENT
;      HY = HI FREQ TABLE INCREMENT
;
      .WORD  L4,H2
      .WORD  L1,H1
      .WORD  L1,H2
```


PETITIONER ECOBEE
EX. 1010

```
        .WORD  L1,H3
        .WORD  L2,H1
        .WORD  L2,H2
        .WORD  L2,H3
        .WORD  L3,H1
        .WORD  L3,H2
        .WORD  L3,H3
        .WORD  L1,H4
        .WORD  L2,H4
        .WORD  L3,H4
        .WORD  L4,H4
        .WORD  L4,H1
        .WORD  L4,H3
;
;*************************************************************************
;
; 1 COMPLETE PERIOD OF A SINE WAVE IN 64 TIME SAMPLES
;
; BITS ARRANGED: B0 LSB
; B1
; B2
; B3  MSB
;
        .SECT  "S2",0F900h         ; PLACE TABLE AT PAGE BOUNDARY
;
; ** TABLE MUST START AT A PAGE BOUNDARY **
;
TABLE   .EQU   $
        .BYTE  08h,09h,0Ah,0Bh,0Ch,0Ch,0Dh,0Dh
        .BYTE  0Dh,0Eh,0Eh,0Eh,0Eh,0Fh,0Fh,0Fh
        .BYTE  0Fh,0Fh,0Fh,0Eh,0Eh,0Eh,0Eh,0Dh
        .BYTE  0Dh,0Dh,0Ch,0Ch,0Bh,0Ah,09h,08h
        .BYTE  07h,06h,05h,04h,03h,03h,02h,02h
        .BYTE  02h,01h,01h,01h,01h,00h,00h,00h
        .BYTE  00h,00h,00h,01h,01h,01h,01h,02h
        .BYTE  02h,02h,03h,03h,04h,05h,06h,07h
;
        .END
```


PETITIONER ECOBEE
EX. 1010

System Integrity Check for the TMS370

Microcontroller Products—Semiconductor Group
Texas Instruments

PETITIONER ECOBEE
EX. 1010

PETITIONER ECOBEE
EX. 1010

System Integrity

This routine provides a simple software check of system integrity. It can be placed before the return (RTS) in a timer service routine to periodically examine the value of the return stack pointer (one byte) and return program counter value (two bytes) to see if they are within the normal operating range.

Routine

```
; REQUIRED EQUATES:
; STACK = stack pointer initialized value
; SMAX = maximum value stack pointer ever attains
;
; OTHER  LABELS:
; PCCHK = entry point
; RESTART = address to branch to if error condition is detected
RESTART   .EQU    7000h
SMAX      .EQU    07fh
STACK     .EQU    07fh
PCCHK     .EQU    $
          STSP                ; Store current stack pointer
          MOV     *-3[B],A    ; Load MSB return
          CMP     7FFEh,A     ; Abort if < MSB reset vector
          JL      ABORT
          JNE     PCCHK1      ; Must be equal for next check
          MOV     *-2[B],A    ; Load LSB return
          CMP     7FFFh,A     ; Abort if < LSB reset vector
          JL      ABORT
PCCHK1    CMP     #STACK+5,B  ; Load best case stack
          JL      ABORT       ; Abort if current stack is < best case
          CMP     #SMAX,B     ; Load max stack
          JHS     ABORT       ; Abort if stack is > than max
          POP     B           ; Restore context
          POP     A           ; (if saved)
          RTI                 ; Return from interrupt
ABORT     BR      RESTART     ; Else restart the program
```


PETITIONER ECOBEE
EX. 1010

PETITIONER ECOBEE
EX. 1010

Part III
Module Specific Application Design Aids

Part III contains six sections:

RESET Operations 99

SPI and SCI Modules 105

Timer and Watchdog Modules 199

Analog to Digital Modules 309

PACT Module 375

I/O Pins 439

PETITIONER ECOBEE
EX. 1010

PETITIONER ECOBEE
EX. 1010

Reset: Explanation of Operation and Suggested Designs

Michael S. Stewart
Microcontroller Products—Semiconductor Group
Texas Instruments

PETITIONER ECOBEE
EX. 1010

PETITIONER ECOBEE
EX. 1010

Explanation of Operation and Suggested Designs

The function of the $\overline{\text{RESET}}$ pin is to ensure an orderly software startup and hardware initialization. The TMS370 family of microcontrollers has three possible reset sources:

1. Low level input on the $\overline{\text{RESET}}$ pin
2. Watchdog (WD) reset (Section 7.7 - *TMS370 Family User's Guide*)
3. Oscillator fault detection (Section 4.1.3 - *TMS370 Family User's Guide*)

There are also three reset status flags that will be set depending on the source of the reset. Once a reset occurs, the program can test the status bits to determine the source of the reset and then take appropriate actions. The reset status flags are shown below:

Table 1. Reset Status Flags

Register	Peripheral File Bit Location	Control Bit	Source of Reset
SCCR0	P010.7	COLD START	Power-up reset
SCCR0	P010.4	OSC FLT FLAG	Oscillator below minimum range
T1CTL2	P04A.5	WD OVRFL INT FLAG	Watchdog timer timeout

COLD START

If the COLD START bit is set, it indicates that a power-up reset has occurred since this bit was last cleared (writing a 0). If the COLD START bit is not set when read, it indicates that no power-up reset has occurred since last writing a 0 to this bit.

OSC FLT FLAG

The oscillator fault circuitry causes a system reset if the oscillator is operating below a minimum specified frequency trip point that is typically below 20 KHz, but never above 500 KHz. When this condition is detected, the OSC FLT FLAG (P010.4) is set and the reset pin is held low until normal oscillation returns (typically about 1.8 MHz). The OSC FLT FLAG is not cleared by an active reset. Therefore, once the device attains normal operation again and reset is released, the reset fault flags can be polled to determine the source of the reset. The OSC FLT FLAG bit must be cleared by software. For more information, see the *TMS370 Family User's Guide*.

WD OVRFL INT FLAG

If enabled, the WD OVRFL INT FLAG (WD overflow) will cause a system reset if the TMS370 watchdog (WD) timer is allowed to overflow or an incorrect value is written to the watchdog reset key register (P048). The $\overline{\text{RESET}}$ pin will be held low for eight system clock cycles if the WD overflow occurs.

General Operation

The $\overline{\text{RESET}}$ pin is an I/O pin. An external signal with a duration of one system clock cycle (SYSCLK) is guaranteed to reset the device, however a much smaller signal could actually cause a reset. If the TMS370 device detects a reset pulse with a duration of less than eight system clock cycles, the TMS370 will hold the $\overline{\text{RESET}}$ pin low for eight system clock cycles. If an enabled WD overflow occurs, the $\overline{\text{RESET}}$ pin will be pulled low internally for eight system clock cycles. If an oscillator fault is detected, the $\overline{\text{RESET}}$ pin will be held low until oscillation returns to normal. The ability of the $\overline{\text{RESET}}$ pin to be pulled low internally allows the TMS370 device to reset the entire system. However, since the $\overline{\text{RESET}}$ pin can drive a low signal,

PETITIONER ECOBEE
EX. 1010

care must be taken in designing the reset circuitry. A typical reset circuit is illustrated in figure 1. Additional reset circuit information is available in the *TMS370 Family User's Guide*.

Figure 1. Typical Reset Circuit

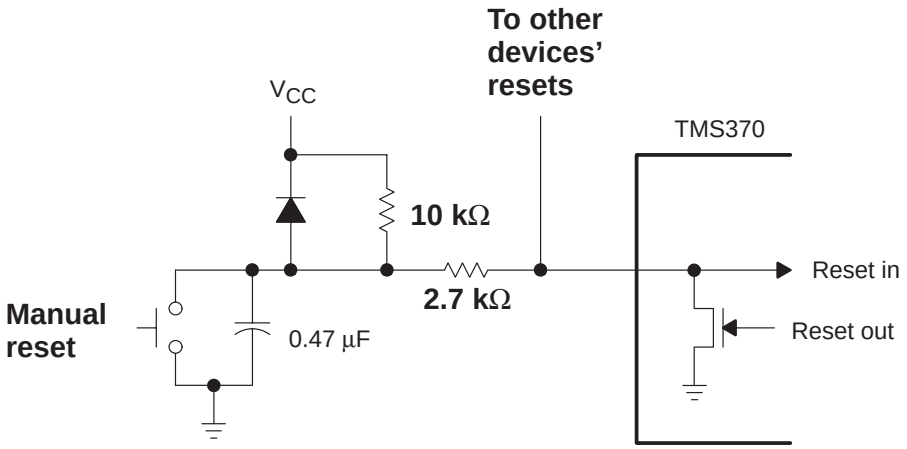

- The RC network of 10 kΩ and 0.47 pF provides a power-up rise time. If this power-up rise time is not long enough, you can use a larger capacitor. However, replacing the 10 kΩ resistor with a larger resistor may cause the voltage at the $\overline{\text{RESET}}$ pin to be less than V_{IH}.
- The 2.7 kΩ resistor protects the $\overline{\text{RESET}}$ pin from the capacitor discharging directly into the pin when the pin is pulled low internally.
- The diode allows the capacitor to discharge quickly during a brownout or power-off condition.

PETITIONER ECOBEE
EX. 1010

Part III
Module Specific Application Design Aids

Part III contains six sections:

RESET Operations 99

SPI and SCI Modules 105

Timer and Watchdog Modules 199

Analog to Digital Modules 309

PACT Module 375

I/O Pins 439

PETITIONER ECOBEE
EX. 1010

PETITIONER ECOBEE
EX. 1010

Using the TMS370 SPI and SCI Modules

Kevin L. Self
Microcontroller Products—Semiconductor Group
Texas Instruments

Contributions by Paul Krause, Mark Palmer, and Al Lovrich

PETITIONER ECOBEE
EX. 1010

PETITIONER ECOBEE
EX. 1010

Introduction

The TMS370 family of 8-bit microcontrollers has been designed with two serial communications modules: the serial peripheral interface (SPI) and the serial communications interface (SCI). These two modules greatly enhance the ability of the microcontroller to interface to other serial devices and common interfaces such as the industry standard RS-232. External hardware and software overhead are reduced by the flexibility and programmability of the interfaces.

This application report provides examples of hardware interfaces and software routines to illustrate the versatility of the SPI and SCI modules. Common applications of these modules will be discussed, which may be modified to suit the engineer's specific needs. Additional information on the serial interfaces may be found in the *TMS370 Family User's Guide*.

NOTE:
The SCI module is available in the three pin (SCI1) and two pin (SCI2) versions.

PETITIONER ECOBEE
EX. 1010

Module Description: Serial Peripheral Interface (SPI)

The SPI – How It Works

The SPI module is a high-speed synchronous serial I/O port that shifts a serial bit stream of variable length and data rate between the device and other peripheral devices. The SPI is especially suited for multiprocessor and external peripheral communications where the designer needs high-speed synchronous data transfer. The use of the SPI can greatly reduce overhead when connecting several peripherals together by transferring address or status information. The SPI can be used to communicate with other microcontrollers, serial shift registers, or display drivers. In addition, the SPI can be used to load memory (RAM or EEPROM) and allow the device to be reprogrammed in-socket.

A block diagram of the SPI is shown in Figure 1. In its simplest form, the SPI can be thought of as a fast, programmable shift register. Data to be transmitted is written to the SPIDAT register, and received data is latched into the SPIBUF register to be read. Data transmission rates and data formatting are controlled by the SPI state logic.

Figure 1. SPI Block Diagram

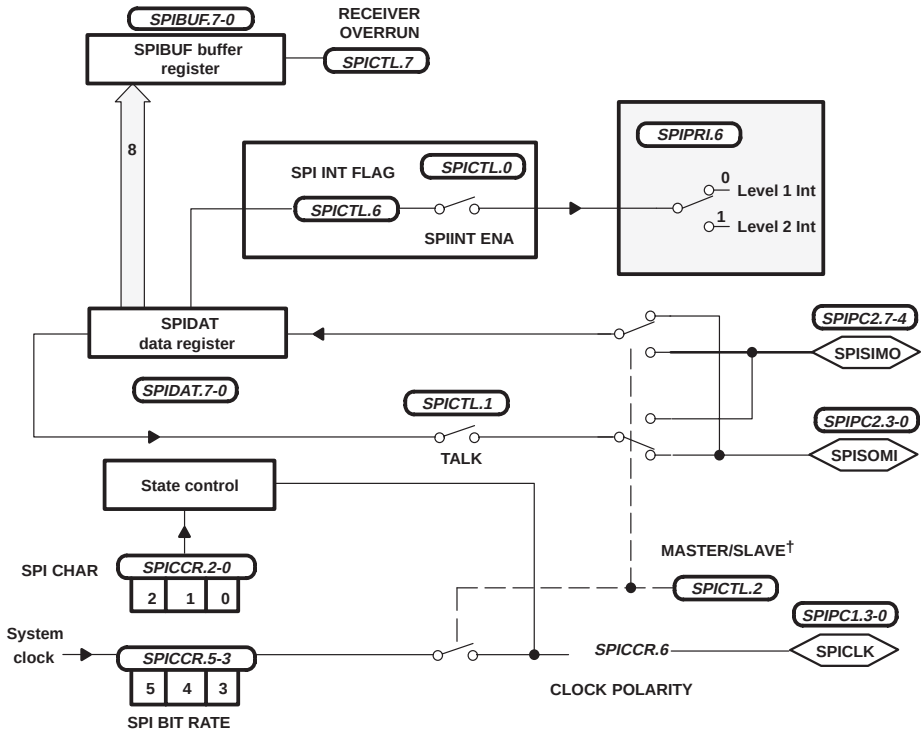

PETITIONER ECOBEE
EX. 1010

SPI Operating Modes

The Master Mode

The SPI operates in one of two modes. The master mode is used when the SPI controls the data transfer. The master SPI initiates and controls the data transfer by issuing the SPICLK signal. Writing data to the SPIDAT buffer starts the transfer by starting SPICLK and shifting the data out of the SPIDAT shift register onto the SPISIMO pin. New data is simultaneously gated in on the SPISOMI pin into the SPIDAT buffer.

Since the master device controls the data transfer by issuing the SPICLK, the other devices must wait for the master to start the transmission. Even if the master is only interested in receiving data, it is still necessary to write dummy data to the SPIDAT register to initiate the transfer from the slave or external source.

Because of the way data is shifted through the SPIDAT register, any data value in SPIDAT is always modified after a transmission, even if no new data value has been received into the register. The SPIDAT register will contain indeterminate data because no new data has been received.

The Slave Mode

The slave mode is used when the SPI is controlled by another serial device. In the slave mode, the SPI is dependent on an external clock source from a master configured device to control the data transfer. An element of data resident in the SPIDAT buffer is shifted out upon receipt of a clock signal on the SPICLK pin, which in slave mode becomes an input pin. Simultaneously, any data present on the SPISIMO pin is shifted into the SPIDAT register. The data transmission of a slave can be disabled by clearing the TALK bit. This allows many devices to be tied to the same serial network, but it eliminates the possibility of write conflicts. Figure 2 illustrates two TMS370 devices in a master/slave connection.

PETITIONER ECOBEE
EX. 1010

Figure 2. Master / Slave Connection

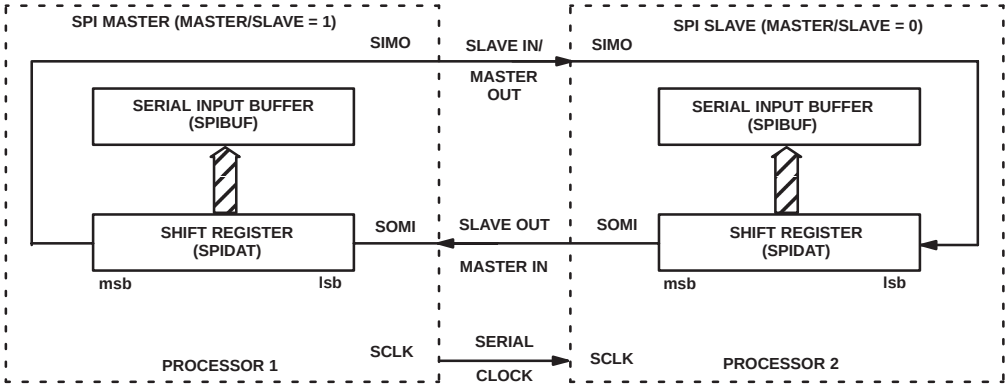

Configuring the SPI

Data format, baud rate, interrupt generation, and operating mode are controlled by setting the SPI control registers shown in Appendix A. The SPI should be in an SPI SW RESET condition before changing any of the configuration registers. This freezes the state of the SPI while it is being configured. After setting the SPI parameters, release the reset. Before initiating a data transmission, you need to initialize the parameters discussed in the following sections.

SPI Data Format – Transmitting and Receiving

Character length is programmable and can be set from one to eight bits by the user. This is done by setting SPICCR bits 0–2 to the appropriate values shown in Table 1. If the character length is fewer than eight bits, it is important to note the following:

1. Data must be written to SPIDAT left-justified. Data is shifted out of the SPIDAT register MSB first, and if the character is not left-justified, the data will be corrupted.

2. Data is received into SPIDAT right-justified. The MSB of the transmitted data is shifted into the LSB of SPIDAT and walked across. For character lengths less than eight bits, there will be extra bits containing information from previous transmissions that must be accounted for.

PETITIONER ECOBEE
EX. 1010

The SPICLK and Data Transfer Rate

The rate at which data is transferred out of SPIDAT is programmed by the SPI bit rate bits (SPICCR.3–5). The rate can be set from SYSCLK/2 to SYSCLK/256 as shown in Table 2. The SPICLK rate is only used in the master mode; in slave mode the SPICLK rate is irrelevant because the clock signal is external. The SPICLK is output anytime a write is made to SPIDAT and the device is in the master mode. The polarity of the clock bit can be set by the user (SPICCR.6) to latch the data on the rising or falling edge of the clock pulse. When an external clock is being used (slave mode), the input clock frequency cannot be greater than SYSCLK/8 to allow the internal clocks to synchronize.

Table 1. SPI Character Bit Length

Char 2	Char 1	Char 0	Character Length
0	0	0	1
0	0	1	2
0	1	0	3
0	1	1	4
1	0	0	5
1	0	1	6
1	1	0	7
1	1	1	8

Table 2. SPI Clock Frequency

SPI† Bit Rate 2	SPI† Bit Rate 1	SPI† Bit Rate 0	SPI Clock Frequency
0	0	0	SYSCLK/2
0	0	1	SYSCLK/4
0	1	0	SYSCLK/8
0	1	1	SYSCLK/16
1	0	0	SYSCLK/32
1	0	1	SYSCLK/64
1	1	0	SYSCLK/128
1	1	1	SYSCLK/256

† If the SPI is a network slave, the module receives a clock on the SPICLK pin from the network master, and these bits have no effect on SPICLK. The frequency of the input clock should be no greater than the SYSCLK frequency divided by 8.

PETITIONER ECOBEE
EX. 1010

A table showing the baud rates for common crystal frequencies versus SPI bit rate values is shown below in Table 3. The values were found using the formula

$$\text{SPI BAUD RATE} = \text{SYSCLK} / (2 \times 2^{b})$$

where b = bit rate specified in the SPI control register (SPICCR.5-3) (range 0–7).

Table 3. Baud Rates for SPI Bit Rate Values

SYSCLK (Crystal/Oscillator Frequency / 4) (MHz)					
Divide By	**.5**	**1.25**	**2.5**	**3.75**	**5**
2	250000	625000	1250000	1875000	2500000
4	125000	312500	625000	937500	1250000
8	62500	156250	312500	468750	625000
16	31250	78125	156250	234375	312500
32	15625	39062.5	78125	117187	156250
64	7812.5	19531.2	39062.5	58593.7	78125
128	3906.25	9765.62	19531.2	29296.8	39062.5
256	1953.12	4882.81	9765.62	14648.4	19531.2

Controlling the SPI through Interrupts and Flag Checking

The SPI interrupt logic can generate an interrupt upon receiving or transmitting a complete character as determined by the SPI character length. This provides a convenient and efficient way to handle the reception or transmission of data.

The interrupt can be enabled or disabled using the SPI INT ENA bit (SPICTL.0), and the interrupt priority set with the SPI PRIORITY bit (SPIPRI.6). Whether or not the SPI interrupt is enabled, the SPI INT flag (SPICTL.6) will be set upon the transmission or reception of a character. The SPI INT flag cannot be cleared as it is read only, but it is automatically cleared if SPIBUF is read, the SPI SW RESET bit is set, or a system reset is initiated. Even if a data value is not going to be saved, it is still necessary to do a dummy read to clear the SPI INT flag. If the flag is not cleared and the interrupts are enabled, then the interrupt routine will be called again as soon as it is completed.

Data transmission is not instantaneous in the SPI. It is necessary to wait for the SPI to transmit or receive a character before reading from or writing to the SPIDAT register again. There are two ways to do this:

1. When the SPI has transmitted or received new data, the SPI INT routine is generated if enabled. The received character can be read, or a new character transmitted.

PETITIONER ECOBEE
EX. 1010

2. If the program cannot do anything until the new data value is received or transmitted, the SPI INT flag can be continuously polled until it goes high. At that time, the character can be read or a new one transmitted.

It is important to use one of the above methods to wait for the data before reading or writing again. Also, if the exact number of cycles is known, the transmission can be timed that way. When doing fast data transfers where the possibility of a data collision exists, polling the RECEIVER OVERRUN flag (SPICTL.7) will indicate if you have lost any data.

The TALK Bit and Multiprocessor Communications

If more than two processors are going to be connected to the same SPI data lines (SPISIMO/SPISOMI), it will be necessary to limit the conversation to just two processors at a time. This is done through software using the TALK bit (SPICTL.1). When the TALK bit is 0, data transmission is disabled but reception continues. One device, usually (but not necessarily) the master, sends out an address to other devices in the network that have their TALK bits set to 0. Since reception is not affected, all devices receive the transmitted address and compare it to their own addresses. If a device matches, it sets its TALK bit and begins transmitting data. When it finishes, the receiving device clears its TALK bit and the network waits for another address. Another scheme for using the TALK bit is to transmit groups of characters (10 or so) in a block with the address as the first character. This way the address occurs at regular intervals and reduces the need for address checking.

Considerations When Using the SPI

The most important thing to remember when writing SPI service routines is to keep your code short. Received data should be quickly removed from the SPIBUF register to prevent it from being overwritten. If you have to manipulate the data, wait until all the data has been received. This becomes more important as the SPI baud rate increases. If your code involves long SPI routines, new data may be received before the previous data value has been read from the SPI buffer register.

PETITIONER ECOBEE
EX. 1010

Data Integrity and the SPI

The SPI was designed as a fast, simple interface to serial logic. As a result, it has no direct way to check for transmission errors. There are a number of software methods that can be used to check the integrity of the transmission. Parity checking is one of the most common, and it can be easily implemented in software for the SPI. Parity checking involves reserving one bit of the character to be used in setting the total number of 1s in a character as odd or even.

If you are going to be sending large blocks of data, there are coding methods that allow faster data transfer but still ensure data integrity. Block checksums and other encoding methods can be found in most books on digital communications. These methods allow some degree of data integrity without significantly slowing the data transfer rate.

PETITIONER ECOBEE
EX. 1010

SPI Module Software Examples

The following are examples of the various modes of operation and common software routines used in operating the SPI. The register equate for the following examples shown below.

Common Equates

```
SPICCR    .equu      P030   ;SPI Configuration Control Register
SPICTL    .equ       P031   ;SPI Operation Control Register
SPIBUF    .equ       P037   ;Serial Input Buffer
SPIDAT    .equ       P039   ;Serial Data Register
SPIPC1    .equ       P03D   ;SPI Port Control Register 1
SPIPC2    .equ       P03E   ;SPI Port Control Register 2
SPIPRI    .equ       P03F   ;SPI Priority Control Register
```


PETITIONER ECOBEE
EX. 1010

Master SPI Configuration

This routine shows how to configure the SPI to operate in the master mode. Data is sent to a peripheral device. The value needed for the SPI bit rate register is computed from the formula:

$$\text{SPI BAUD RATE} = \text{SYSCLK} / (2 \times 2^{b})$$

where b is the bit rate from SPICCR.3–5 in the range from 0–7. This is important in applications where it is necessary to fix the real-time frequency of SPICLK, such as interfacing to slow peripheral logic.

The SPI in this routine with a SYSCLK of 5 MHz is connected to a shift register with a maximum operating frequency of 250 KHz. The bit rate needed is

$$b = \log_2 [\ \text{SYSCLK} / (\text{SPI baud rate} \times 2\ )\ ]$$
$$b = \log_2 [\ 5 \times 10^6 / (250 \times 10^3 \times 2\ )\ ] = 3.35 \text{ (approximately)}$$

Since only integers are allowed, the bit rate should be set to the next highest value, such as 4, which is SYSCLK/32. This gives an actual SPI rate of 156.25 kHz, which is within the operating range of the shift register. The character size is eight bits.

Routine

```
SETMASTER MOV    #0E7h,SPICCR     ;SPI reset, clock active low, /128, 8 bits
          MOV    #006h,SPICTL     ;Master mode, enable TALK, disable SPI INT
          MOV    #002h,SPIPC1     ;Set for SPICLK out.
          MOV    #022h,SPIPC2     ;Enable SPISOMI, SPISIMO pins for SPI.
          MOV    #040h,SPIPRI     ;SPI interrupts are low priority.
          AND    #067h,SPICCR     ;Release SPI reset.
          . . .                   ;Execute main program here. When ready
                                  ;to transmit, call subroutine.
          CALL   SENDDATA         ;Execute subroutine.
          . . .

SENDDATA  MOV    DATAOUT,SPIDAT   ;Move data to SPIDAT, initiate
                                  ;transmission.
WAIT   BTJZ   #040h,SPICTL,WAIT   ;Loop until transmission complete.
       MOV    SPIBUF,DUMMY        ;Dummy read to clear SPI INT flag.
       RTS                        ;Return to main program.
```


PETITIONER ECOBEE
EX. 1010

Slave SPI Configuration

This routine shows how to use the SPI interrupt to interrupt a program and load two 8-bit characters from the SPI. The program will call the SPI interrupt upon receipt of an 8-bit character, save it, and wait for one more character. It will then save the values and return to the main program. The characters will be saved in DATAMSB and DATALSB.

Routine

```
SETSLAVE  DINT                    ;Disable global interrupts.
          MOV    #0E7h,SPICCR     ;SPI reset, clock active low, /32, 8 bits
          MOV    #001h,SPICTL     ;Slave mode, TALK disable, SPI INT enable
          MOV    #002h,SPIPC1     ;Set SPICLK.

          MOV    #022h,SPIPC2     ;Enable SPISOMI, SPISIMO pins for SPI.
          MOV    #040h,SPIPRI     ;SPI interrupts are low priority.
          MOV    #067h,SPICCR     ;Release SPI RESET.
          EINT                    ;Enable global interrupts.

          . . .                   ;Insert main part of program here. SPI
                                  ;INT will fetch characters when first
                                  ;is detected.

SPIINTR   MOV    SPIBUF,DATAMSB   ;Save first character already in buffer.
WAIT      BTJZ   #040h,SPICTL,WAIT;Wait until second character is received.
          MOV    SPIBUF,DATALSB   ;Save second character.
          RTI                     ;Return to main program.
```


PETITIONER ECOBEE
EX. 1010

Dynamic Bit Justification

On occasion it may be necessary to transmit characters of length less than eight bits. As stated previously, the data needs to be left-justified for transmitting from SPIDAT and right-justified when read from SPIBUF. If the SPI is accessing several peripherals with different character lengths, it may be more efficient to have one subroutine justify all the transmitted data.

This routine reads the value of the character length stored in SPICCR.0–2 and left-justifies the data to be transmitted as needed. If the character length is less than five bits, the routine swaps nibbles to save time. The value to be transmitted is stored in the register DATA.

Routine

```
LJUSTIFY  MOV    SPICCR,NUMBITS      ;Save character length in temp register.
          XOR    #0FFh,NUMBITS       ;8 numbits = number of shifts
          AND    #007h,NUMBITS       ;Clear all bits except character length.
          BTJZ   #004h,NUMBITS,ROLL  ;If < 4 shifts needed, go to roll
                                      ;routine.
          SWAP   DATA                ;More than 4 shifts, swap is faster.
          SUB    #004h,NUMBITS       ;Since we swapped, 4 rolls are complete.
          JZ     DONE                ;If only 4 rolls needed, we are done.
ROLL      RL     DATA                ;Rotate one bit left.
          DJNZ   NUMBITS,ROLL        ;If not done rotating, continue.
DONE      MOV    DATA,SPIDAT         ;Data is now left justified, transmit.
```


PETITIONER ECOBEE
EX. 1010

Address Recognition by SPI

In multiprocessor systems using the SPI for communication, it is necessary to keep conversations limited to two microprocessors at a time. The TALK bit is used to disable the transmit ability of a TMS370 in slave mode until it sees its address, MYADDRESS, at which time it will transmit a byte of data. This example shows the SPI interrupt routine, which is called when a character is received. If it is the correct address, the TALK bit is set, SPIDAT is loaded, and the TALK bit is cleared once again.

Routine

```
SPIINTR   MOV    SPIBUF,ADDRESS          ;Store received address.
          CMP    #MYADDRESS,ADDRESS      ;Is it my address?
          JNZ    DONE                    ;If not, ignore transmission.
          OR     #002h,SPICTL            ;Set TALK bit.
          MOV    DATA,SPIDAT             ;Load transmit buffer, wait for clock
                                         ;from master.
WAIT      BTJZ   #040h,SPICTL,WAIT       ;Wait until character is sent.
          MOV    SPIBUF,DUMMY            ;Dummy read to clear SPI INT flag.
DONE      AND    #0FDh,SPICTL            ;Clear TALK bit.
          RTI                            ;Return from interrupt.
```


PETITIONER ECOBEE
EX. 1010

SPI Module Specific Applications

Vacuum Fluorescent Display Driver

Use SPI to Transmit Data to Serial Shift Register

One common and very practical use of an SPI is sending serial data to a display. The use of simple software routines can simplify your design and eliminate expensive external hardware such as decoders. This example interfaces a TMS370C010 microcontroller to a vacuum fluorescent display. The only external logic necessary is one TMS0170 VF Display Driver. This device is a 33-bit shift register/display driver and is especially suited for serial display applications. The design uses only SPI and Timer 1 (T1) pins, so the designer does not need to dedicate any more I/O pins to the design. The schematic shown is for a generic serial display application, and it can be easily modified to work with an LED or LCD display.

PETITIONER ECOBEE
EX. 1010

Figure 3. Vacuum Florescent Interface

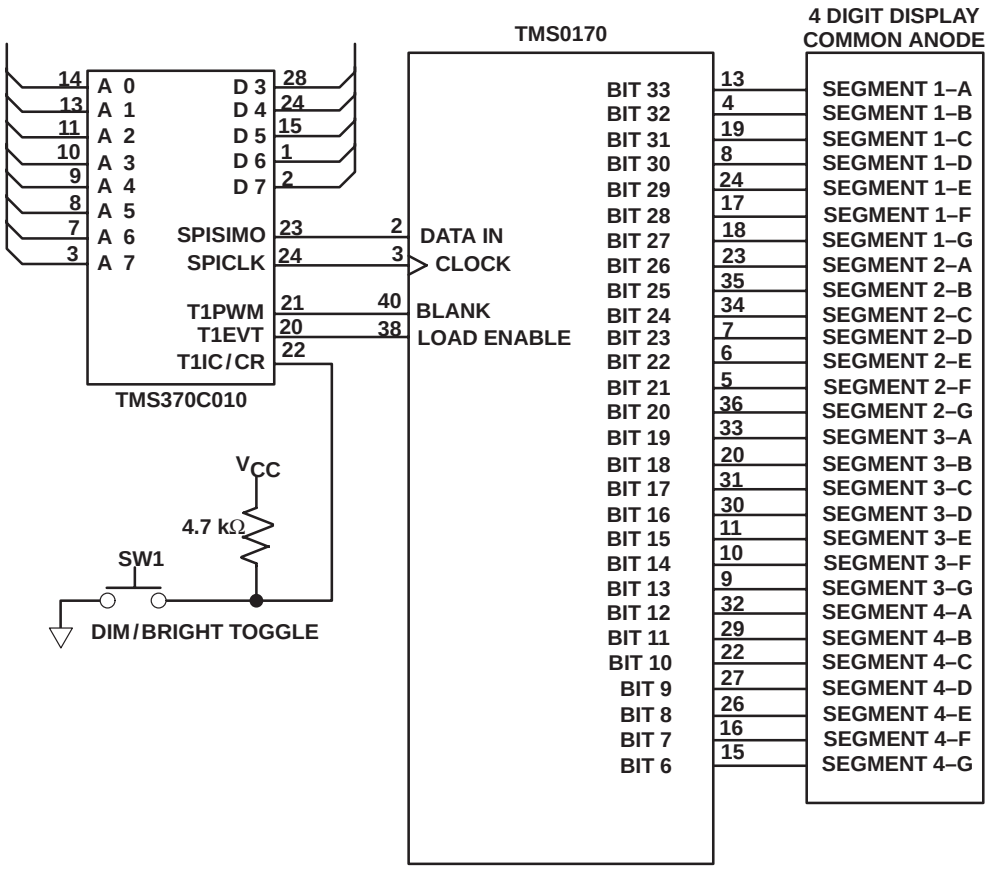

In the example below, the display is pulsed periodically to adjust the intensity and update the display. In addition, the display may be put into a dim mode by toggling the T1IC/CR pin. The T1 PWM pin is used to control the brightness of the display by pulsing the blanking input of the TMS0170. The data is latched into the TMS0170 by pulsing the T1EVT pin, which is configured as an output. When the new data value is to be displayed, it is shifted out of the SPI.

PETITIONER ECOBEE
EX. 1010

This display update routine is controlled by T1 interrupts. The compare 1 and compare 2 registers are set to control the refresh rate and intensity, respectively. Because the display is pulsed more frequently than new values are calculated, an interval counter is used to specify when it is time to update the display value. In this example, the following parameters are used:

Refreshes / s	= 100 (eliminates flicker in display)
Display updates/s	= 2
SYSCLK freq.	= 5 MHz
Prescale divide	= 16
Normal display intensity	= 90%
Dim display intensity	= 40%

The T1 compare register values are found from the formulas:

$$\text{Compare 1 value} = \frac{\text{SYSCLK Frequency}}{\text{refreshes / s x prescale divide}}$$

$$\text{Compare 1 value} = \frac{5{,}000{,}000}{100 \text{ x } 16}$$

Compare 2 value = intensity x compare 1 value

Compare 2 value (bright) = 0.9 x 3125 = 2812 or 0AFCh

Compare 2 value (dim) = 0.4 x 3125 = 1250 or 04E2h

By XORing the bright and dim values together, we get the logical difference between the two values. XORing the difference with either the bright or dim values will give the other. This is an easy and quick way to toggle the brightness.

DIFFMSB = compare 2 value (dim) MSB XOR compare 2 value (bright) MSB
DIFFLSB = compare 2 value (dim) LSB XOR compare 2 value (bright) LSB

The interval counter value is found from the following formula:

$$\text{Interval} = \frac{\text{refreshes / s}}{\text{updates / s}}$$

Interval = 100 / 2 = 50 or 32h

PETITIONER ECOBEE
EX. 1010

Routine

The source code for this application is as follows:

```
        .title   "Display Driver"

;       This routine uses the SPI and T1 modules to output values
;       to a serial display. The display is updated every 0.5 seconds.
;       Display intensity is changed by toggling TlIC/CR pin.

SPICCR    .equ   P030                    ;SPI register assignments.
SPICTL    .equ   P031
SPIDAT    .equ   P039
SPIBUF    .equ   P037
SPIPC1    .equ   P03D
SPIPC2    .equ   P03E

T1CNTRMSB  equ   P040                    ;T1 register assignments.
T1CMSBLSB .equ   P041
T1CMSB    .equ   P042
T1CLSB    .equ   P043
T1CCMSB   .equ   P044
T1CCLSB   .equ   P045
T1CTL1    .equ   P049
T1CTL2    .equ   P04A
T1CTL3    .equ   P04B
T1CTL4    .equ   P04C
T1PC1     .equ   P04D
T1PC2     .equ   P04E
T1PRI     .equ   P04F

;       Allocate register space for the registers used in the application
;       routine.

DISPMSB   .equ   R5                      ;High byte of display value.
DISPLSB   .equ   R6                      ;Low byte of display value.
ICOUNT    .equ   R7                      ;Time between display refreshes.
DCOUNT    .equ   R8
DIGIT0    .equ   R10                     ;BCD values of display digits
```


PETITIONER ECOBEE
EX. 1010

```
DIGIT1    .equ   R11                    ; ”
DIGIT2    .equ   R12                    ; ”
DIGIT3    .equ   R13                    ; ”
TEMPMSB   .equ   R14
TEMPLSB   .equ   R15
DUMMY     .equ   R16

;      Assign  values for display intensity, and refresh period.
TIMER     .equ   3125                   ;100 interrupts/sec @ 5 MHz
BRIGHT    .equ   TIMER*9/10             ;Max intensity = 90
DIFF      .equ   BRIGHT^(TIMER*4/10)    ;Min intensity = 40
INTERVAL  .equ   50

          .text  07000h

START     DINT                          ;Disable all interrupts.

;         SPI    Initialization
          MOV    #OE6h,SPICCR           ;Reset SPI, data out on falling
                                        ;SPICLK,
                                        ;7-bit characters.
          MOV    #006h,SPICTL           ;Master,enable TALK, disable SPI INT.
          MOV    #002h,SPIPC1           ;Enable SPICLK out.
          MOV    #020h,SPIPC2           ;Set SPISIMO out.

;         Set delays for brightness, and value updates
          MOV    #HI(TIMER),T1CMSB      ;Load compare 1 register with delay.
          MOV    #HI(TIMER),T1CLSB      ;Time between refreshes (10 mS)
          MOV    #HI(BRIGHT),T1CCMSB    ;Set display to bright intensity.
          MOV    #LO(BRIGHT),T1CCLSB    ; ”
          MOV    #INTERVAL,ICOUNT       ;Temp register for interval counter

;         Timer 1 Initialization
          MOV    #001h,T1PC1            ;Set T1EVT as general I/O.
          MOV    #062h,T1PC2            ;Set T1IC/CR to input.
          MOV    #040h,T1PRI            ;Set T1 interrupts to low priority.
          MOV    #071h,T1CTL4           ;Dual-compare,disable interrupts.
          MOV    #005h,T1CTL1           ;System clock / 16
          MOV    #000h,T1CTL3           ;Disable T1 interrupts, clear flags.
          MOV    #001h,T1CTL2           ;Disable overflow interrupts,reset
```


PETITIONER ECOBEE
EX. 1010

```
                                        ;T1.

;       Enable Timer1 & SPI
        MOV    #005h,T1CTL3             ;Enable T1EDGE INT, enable T1C1 INT.
        MOV    #066h,SPICCR             ;Release SPI.
        MOV    #0F0h,B                  ;Move stack pointer value to B.
        LDSP                            ;Set stack pointer.
        EINT                            ;Global interrupt enable

MAIN                                    ;Main loop

;       Place major portion of code here. This part of the program should
;       calculate the value to be displayed, scale it from 0 to 9999, and
;       store the result in DISPMSB and DISPLSB. When T1 counts down,
;       the interrupt will be called and the program will jump to DISPLAY.
        ...
        MOV    #??,DISPMSB              ;Move sample value into memory.
        MOV    #??,DISPLSB              ;
        ...
        JMP    MAIN

;       T1 Interrupt Routine.
;       This routine pulls the value to be displayed from DISPMSB and
;       DISPLSB, converts it to a packed 4 nibble BCD number, and shifts
;       the result out through the SPI. The routine checks to see whether
;       the routine was called by the timer or the T1C1 pin and clears
;       the appropriate flag. DISPMSB and DISPLSB are temporary registers
;       and will not contain their original values upon completion of the
;       interrupt routine.

DISPLAY

        BTJZ   #080h,T1CTL3,TIMERINT    ;Was interrupt from T1IC/CR pin?
;       T1IC/CR pin called interrupt, toggle the intensity bright/dim.

        MOV    #003h,T1CTL1             ;Stop timer.
        MOV    #001h,T1CTL2             ;Reset timer (T1 SW RESET).
        MOV    #050h,T1PC2              ;Set PWM as general purpose I/O.
        MOV    #050h,T1PC2              ;Set T1PWM = 1 (command must be
                                        ;repeated).
```


PETITIONER ECOBEE
EX. 1010

```
        MOV    #060h,T1PC2                ;Reenable T1PWM.
        MOV    T1CCLSB,TEMPLSB            ;Get current display intensity.
        MOV    T1CCMSB,TEMPMSB            ;
        XOR    #LO(DIFF),TEMPLSB          ;Toggle display intensity.
        XOR    #HI(DIFF),TEMPMSB          ;
        MOV    TEMPMSB,T1CCMSB            ;Update display intensity
        MOV    TEMPLSB,T1CCLSB            ;
        MOV    #005h,T1CTL1               ;Restart timer.
        AND    #07Fh,T1CTL3               ;Clear T1IC/CR interrupt flag.
        JMP    DONE                       ;End of display toggle: wait for
                                          ;update.

TIMERINT  DJNZ   ICOUNT,NOTNOW            ;Is it time for new value be
                                          ;displayed?
                                          ;If it is not, do not calc new value.
        MOV    #INTERVAL,ICOUNT           ;Restore interval counter.

;       Hex to BCD Conversion Routine.
        CLR    DIGIT2                     ;Clear result registers.
        CLR    DIGIT0                     ;"
        MOV    #16,R3                     ;Set loop count.
LOOP    RLC    DISPLSB                    ;Shift high bit out.
        RLC    DISPMSB                    ;Carry contains the high bit.
        DAC    DIGIT0,DIGIT0              ;Double the number then add high bit.
        DAC    DIGIT2,DIGIT2              ;"
        DJNZ   R3,LOOP                    ;Loop until multiplied 16 times.

        MOV    DIGIT0,DIGIT1              ;Save second digit.
        MOV    DIGIT2,DIGIT3              ;Save third digit.
        SWAP   DIGIT1                     ;Swap BCD nibbles.
        SWAP   DIGIT3                     ;Swap BCD nibbles.
        AND    #0Fh,DIGIT0                ;Clear high nibble.
        AND    #0Fh,DIGIT1                ;Clear high nibble.
        AND    #0Fh,DIGIT2                ;Clear high nibble.
        AND    #0Fh,DIGIT3                ;Clear high nibble.

;       Output display values.
;       This part actually outputs the BCD values to the display through the
;       SPI. Note that in this example the display is limited to 4
```


PETITIONER ECOBEE
EX. 1010

```
;       characters, which gives a maximum value of 9999.

        MOV    #000h,DCOUNT              ;Set counter for data address.
NEXTCHAR  MOV    DCOUNT,B                ;Store DCOUNT in temp register.
        MOV    *DIGIT0[B],A              ;Move BCD value of current char into
                                         ;A.
        XCHB   A                         ;Move BCD value into B.
        MOV    *TABLE[B],A               ;Look up 7-seg value and store in A.
        MOV    A,SPIDAT                  ;Move character byte into SPIDAT
                                         ;register.
WAIT1   BTJZ   #040h,SPICTL,WAIT1        ;Wait for character to be sent.
        MOV    SPIBUF,DUMMY              ;Dummy read to clear SPI INT flag.
        INC    DCOUNT                    ;Location of next digit register.
        BTJZ   #004h,DCOUNT,NEXTCHAR     ;If <4 characters sent, then send
                                         ;another.
        MOV    #005h,T1PC1               ;Toggle TlEVT to latch data.
        MOV    #001h,T1PC1               ;Pull TlEVT low again.
        OR     #001h,T1CTL4              ;Re-enable T1IC/CR interrupt here.
                                         ;This allows delay between
                                         ;recognition of dim/
                                         ;bright toggles to debounce switch.
NOTNOW AND     #0DFh,T1CTL3              ;Clear TlCl interrupt flag.
DONE    RTI                              ;Return from interrupt.

;       Look–up table for converting BCD values to 7–segment display values.
;       Display BCD value.

TABLE   .byte  #07Eh                 ;0
        .byte  #00Ch                 ;1
        .byte  #0B6h                 ;2  The segments are decoded as follows:
        .byte  #09Eh                 ;3    SEGMENT|gfedcba0
        .byte  #0CCh                 ;4        BIT|76543210
        .byte  #0DAh                 ;5
        .byte  #0FAh                 ;6
        .byte  #00Eh                 ;7
        .byte  #0FEh                 ;8
        .byte  #0CEh                 ;9
```


PETITIONER ECOBEE
EX. 1010

```
;       Set up interrupt vector addresses
        .sect  “Vectors”,07FF4h
        .word  DISPLAY                 ;T1 interrupt
        .word  START                   ;All other vectors go to ’START’.
        .word  START
        .word  START
        .word  START
        .word  START
```


PETITIONER ECOBEE
EX. 1010

Bootstrap Loader

Reprogram Data or Program Memory through SPI Port

The SPI is very useful as a bootstrap loader for loading program or data information directly into RAM, EPROM, or EEPROM. The TMS370 family SPI and instruction set provide a fast, efficient way of moving serial data directly into memory. With the addition of a small interrupt service routine, the memory loader can become a bootstrap loader to reprogram a device in-socket, in the field. The interrupt routine must do the following:

Figure 4. Flowchart of Bootstrap Loader Interrupt Service Routine

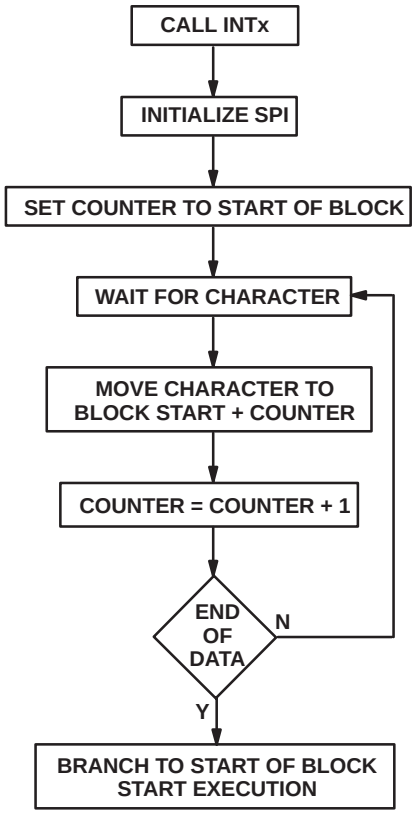

The interrupt routine loads the received data into program memory beginning at a specified location. After the data has been loaded in, the program counter is set to the beginning of the block and program execution is transferred to the new program. The new program can reconfigure the part as desired, or modify the program or data memory.

PETITIONER ECOBEE
EX. 1010

DSP Controller

Interface TMS370 SPI to TMS320C25 DSP

This example shows how the SPI can be used to communicate with other microprocessors. The exact method of communication varies from system to system, but the key parts can be shown to demonstrate how to interface the TMS320C25 and TMS370 serial ports. The TMS320C25 has a serial port similar to the TMS370, but with additional clocking and synchronization pins.

The C25's serial port circuitry contains double buffering of both the transmit and receive registers. The C25 can transmit data in either 8-bit or 16-bit blocks. There are also two modes of transmission: with or without frame synchronization pulses (FSX/FSR). These serial ports (C25) are fully static; the data contained is not lost, and to transmit or receive data CLKX/CLKR must be present.

For a complete description of the TMS320C25, see the *TMS320C25 User's Guide*. An example of a typical interconnection using a TMS370C010 is shown below.

Figure 5. TMS370C010 – TMS320C25 Interface

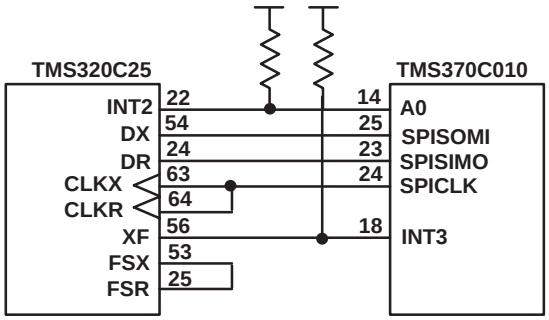

In the setup of figure 6, data to and from both devices is clocked using the SPICLK. The TMS370 is configured so that receipt of an INT3 signal causes the TMS370 to load the SPIDAT register to start the SPICLK. If the TMS320C25 wants to initiate the conversation, it pulls INT3 low, waits for SPIDAT, and is clocked out by the SPICLK. If the TMS370 wants to transmit, it sends out a logic 0 on A0, which is tied to INT2 on the TMS320C25. The TMS320C25 then loads the transmit buffer (DXR) to set up the synchronization circuitry (FSX/FSR). This in turn will cause the TMS320C25 to bring XF low, which activates the TMS370 INT3 routine to start the transfer. The seemingly complicated handshaking is necessary because both the TMS320C25 and the TMS370 want to be in control of the transmission. The TMS320C25 needs to generate its FSX/FSR pulse before data transmission, so it has to know when a data transfer is going to happen. By using the interrupt scheme to control the transmission, a data transfer will not start until both devices are ready. The following procedures summarize the actions required when either device wants to transmit:

PETITIONER ECOBEE
EX. 1010

- TMS320C25 wants to transmit:

C25 loads DXR.	;Places data to be transmitted in buffer.
C25 toggles XF low.	;Generates TMS370 INT3.
TMS370 executes INT3 routine.	

- TMS370 wants to transmit:

TMS370 sets SPEAK370 bit.	;TMS370 initiates the transmission.
TMS370 toggles A0 low.	;Generates TMS370 INT2.
C25 loads DXR.	;Places data to be transmitted in buffer.
C25 toggles XF low.	;Generates TMS370 INT3.
TMS370 executes INT3 routine C25. C25 clears INT2 flag.	;C25 does not initiate transmission.

- TMS370 INT3 routine:

If first time to transmit / receive: TMS370 transmits 1 character. TMS370 transmits 8 characters.	;Cause TMS320C25 to generate ;synchronization pulse (FSX/FSR). ;TMS370 shifts out 8 characters ;to TMS320.
	;TMS370 shifts out 8 characters ;to TMS370.
If SPEAK370 = 0: TMS370 clears INT3 flag. TMS370 clears SPEAK370 flag.	;TMS320C25 initiated transmission ;Ready for next transmission. ;Default TMS320 transmitting.

Figure 6 shows the timing diagram of the continuous mode of 8-bit data transmission.

Figure 6. Continuous Mode No Frame Synchronization Pulse

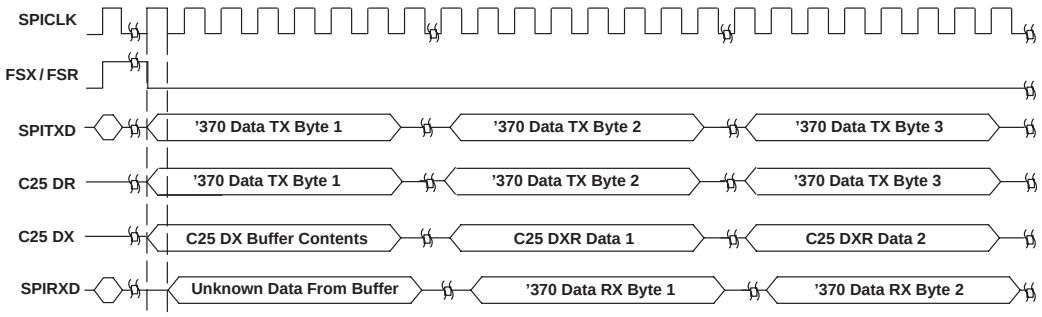

Due to the double buffering of the transmitter, the TMS370 must also clock the C25 for one byte (word) of data to clear the buffer register, and then runs another audit clocking sequence to receive the data. Therefore the C25 data is always received by the TMS370 one character after being loaded into the C25 DXR.

PETITIONER ECOBEE
EX. 1010

Different protocols have different benefits, and the protocol used depends on the requirements of the system. If the system requires continual transmission of data from the C25, then the no frame synchronization mode (no FSX/FSR pulse) allows greater throughput and less system overhead on the TMS370 processor.

If the system only has periodic data transmission of data between the two processors, and the data needs to be transmitted immediately, then the TMS370 needs to allow 16 SPICLK cycles for the data from C25 to be received by the TMS370 with added speed. The first byte from the C25 is dummy data. This procedure is not as efficient as the method of Figure 6, but for single bytes transmitted between long intervals, the data transfer is quicker. This is due to the TMS370's not having to wait for the C25 to load the next byte of transmit data into the buffer for transmission.

Both processors' flexible modes of transmission (such as C25's ability to transmit in either 8-bit or 16-bit mode) allows customization to the parameters of the desired system. The routines shown do not incorporate any checks if both the C25 routine and TMS370 routine try to communicate at the same time. When this situation occurs, both processors will think that they initiated the communication and ignore the received data. If asynchronous communications can occur at the same time in your system, then you need to define a proper protocol.

Routine

```
          .title "TMS370-TMS320C25 Interface Continuous Mode"
;         This is the framework of source code for an interface between a
;         TMS370 microcontroller and a TMS320C25 DSP.  The external
;         interrupts on both devices are used to synchronize the data
;         transfer.

;         Set up equate table for peripheral file registers used in the
;         routine.

SPICCR    .equ   P030                ;SPI register assignments.
SPICTL    .equ   P031
SPIBUF    .equ   P037
SPIDAT    .equ   P039
SPIPC1    .equ   P03D
SPIPC2    .equ   P03E
SPIPRI    .equ   P03F
ADATA     .equ   P022
ADIR      .equ   P023
INT1      .equ   P017
INT2      .equ   P018
INT3      .equ   P019

;      Allocate register space for communications flags and data registers.
```


PETITIONER ECOBEE
EX. 1010

```
COM370    .equ   R4                  ;Status register for TMS320–TMS370 comm
SPEAK370  .dbit  0,COM370            ;=1 if TMS370 is transmitting
FIRSTX    .dbit  7,COM370            ;=1 C25 in continuous mode, need to
                                     ;generate first sync pulse
DATAIN    .equ   R5                  ;Received data
DATAOUT   .equ   R6                  ;Data to be transmitted
          .text  07000H

START     DINT                       ;Disable all interrupts.

          MOV    #100,B              ;Set stack pointer to r100.

          LDSP

          Initialize SPI, APORT, and communication status flag.

          MOV    #087h,SPICCR        ;Reset SPI, data out on rising SPICLK,
                                     ;8-bit characters
          MOV    #006h,SPICTL        ;Master, enable TALK, disable SPI INT.
          MOV    #002h,SPIPC1        ;Enable SPICLK out.
          MOV    #022h,SPIPC2        ;Set SPISIMO & SPISOMI out.
          MOV    #020h,SPIPRI        ;Enable emulator suspend.
          MOV    #007h,SPICCR        ;Reset SPI, data out on rising SPICLK,
                                     ;8-bit characters
          MOV    #001h,ADIR          ;Set A0 as output.
          MOV    #001h,ADATA         ;Set A0 high.
          MOV    #01H,INT1           ;Initialize interrupt 1.
          MOV    #01H,INT2           ;Initialize interrupt 2.
          MOV    #01H,INT3           ;Initialize interrupt 3.
          SBIT0  SPEAK370            ;Default is TMS370 not speaking.
          SBIT1  FIRSTX              ;Initialize as first Transmission.
          MOV    #00H,DATAOUT        ;Initialize the data out register.

          EINT                       ;Enable interrupts.

;      Place main program here. When TMS370 is ready to transmit, it will
;      call subroutine TRANSMIT. This will cause an interrupt in the TMS320
;      which will in turn activate INT1 in the TMS370. When the TMS320 wants
;      to initiate a transfer it will generate an INT1 interrupt, causing the
```


PETITIONER ECOBEE
EX. 1010

```
;      part to execute the INT1 service routine, which will prepare it to
;      initiate a transfer. Since both transmissions by the TMS320 and
;      TMS370 involve calling the TMS370 INT1 routine, the SPEAK370 bit is
;      set by the TMS370 when it initiates a transfer. The data to be
;      transmitted is stored in DATA OUT and received data, if it is valid,
;      will be stored in DATA IN.

MAIN      ...
;
;         TMS370 initiates the data transfer to the C25; set appropriate
;         flags.
;
TRANSMIT  SBIT1  SPEAK370            ;TMS370 is initiating transfer.
          AND    #0FEh,ADATA         ;Write 0 to A0, trigger INT1 in TMS320.
          OR     #001h,ADATA         ;Release TMS320 INT1.
          RTS                        ;Return from subroutine (after INT1
                                     ;call).
;      Interrupt 3 service routine. This routine is called when the
;      TMS370 is going to transmit or receive data.
;      Do frame sync once (FIRSTX).

INTR3     JBIT0,FIRSTX,DATA          ;If NOT the first transmission goto
DATA.
          SBIT0,FIRSTX               ;Clear FLAG FIRSTX, this is first time
          MOV    #080h,SPICCR        ;Set character size=1 bit.
          MOV    #000h,SPICCR        ;Reset SPI, data out on rising SPICLK,
          MOV    #000h,SPIDAT        ;Transmit dummy pulse to make TMS320
                                     ;generate FSX/FSR sync pulse.

WAIT1     BTJZ   #0040h,SPICTL,WAIT1 ;Wait until character has been sent.
          MOV    SPIBUF,DATAIN       ;Clear SPI flag.
          MOV    #087h,SPICCR        ;RESET SPI, character size=8 bit.
          MOV    #007h,SPICCR        ;Enable SPI, character size=8 bit.
DATA      MOV    DATAOUT,SPIDAT      ;Transmit data to TMS320. If SPEAK370=0,
                                     ;this may be dummy data.

WAIT2     BTJZ   #040h,SPICTL,WAIT2  ;Wait until character has been sent.
          JBIT1  SPEAK370,DONE       ;If TMS370 is talking, do not save data.
          MOV    SPIBUF,DATAIN       ;Save received data, clear SPI flag.
DONE      AND    #07Fh,INT3          ;Clear INT1 flag.
```


PETITIONER ECOBEE
EX. 1010

```
          SBIT0  SPEAK370            ;Clear TMS370 transmission flag.
          RTI                        ;End of INT3 routine.

INTR2     ...                        ;Interrupt 2 routine
          MOV    #01H,INT2           ;Clear and enable interrupt 2 flag.
          RTI

INTR1     ...                        ;Interrupt 1 routine
       MOV    #01H,INT1              ;Clear and enable interrupt 1 flag.
       RTI

Set up interrupt vector addresses.
       .sect  "Vectors",07FF4H
       .word  START                  ;Vector goes to 'START'.
       .word  START                  ;Vector goes to 'START'.
       .word  INTR3                  ;INT3 vector
       .word  INTR2                  ;INT2 vector
       .word  INTR1                  ;INT1 vector
       .word  START                  ;Reset vector.
```

The source code for the TMS370C25 in this application is as follows:

```
*
*      sample program for interfacing the TMS370C10 and
*      the TMS320C25 serial ports.
*
*
DRR:   .equ   0                      ;Serial port receive register
DXR:   .equ   1                      ;Serial port transmit register
IMR:   .equ   4                      ;Interrupt mask register
DATA:  .equ   96                     ;General purpose register
*
       .sect  "AORGO"
       B      START                  ;Power-up reset
       .sect  "AORG1"
       B      INT2                   ;Interrupt 2 service routine
       .sect  "AORG2"
       B      RXINT                  ;Serial port receiver interrupt
*
       .sect  "AORG3"
```


PETITIONER ECOBEE
EX. 1010

```
START  .equ   $
       DINT                          ;Disable interrupts.
       LDPK   0                      ;Point to page 0.
       FORT   1                      ;Set serial port to 8-bit mode.
       LALK   0ffc4h                 ;Enable interrupt 2.
       SACL   IMR                    ;
       STXM                          ;FSX is output.
       RFSM                          ;Continuos mode
       ZAC                           ;Zero the accumulator.
       SACL   DRR                    ;Initialize receiver register.
       SACL   DXR                    ;Initialize transmit register.
       EINT
*
*
*  Main body of program goes here. To initiate data transfer to the TMS370
*  CALL subroutine XMIT. Doing this tells the TMS370 to start clocking, and
*  the 320 knows not to save the received data. When subroutine INT2 is
*  entered, the 320 again tells the 370 to start clocking the serial port
*  and the 320 knows that it needs to save the data it receives. RXISR
*  lets the processor know when the data has been received.
*

XMIT   LAC    DXR                    ;Load data for transmission.
       CALL   XMTISR                 ;Initiate data transfer to 370.
       EINT                          ;Enable interrupts.
       IDLE                          ;Wait for received data, do not save
       RET                           ;received data.

INT2:  .equ   $
       RPTK   40                     ;Give 370 enough time to detect
       NOP                           ;the XF generated interrupt. Then
       CALL   XMTISR                 ;initiate data transfer to 370.
       LALK   Offd4h                 ;
       SACL   IMR                    ;Enable int2, rxint.
       EINT                          ;Enable interrupts.
       IDLE                          ;Wait for received data.
       LAC    DRR                    ;Load accumulator with data receive
                                     ;register.
       ANDK   Offh                   ;Save only lower 8 bits.
```


PETITIONER ECOBEE
EX. 1010

```
        SACL   DATA                    ;Store received data.
        RET

*
RXISR: .equ    $                       ;Serial receive interrupt
        EINT                           ;Enable interrupts.
        RET

*
XMTISR:.equ    $                       ;Initiate data transfer to 370 routine.
        RXF                            ;Toggle XF flag low, causes 370
                                       ;interrupt
        NOP                            ;
        NOP                            ;
        NOP                            ;
        SXF                            ;and then high, to clear only, want 370
                                       ;INT3
        RET                            ;routine to execute once.
```


PETITIONER ECOBEE
EX. 1010

SCI Module Description

The SCI – How It Works

The SCI module is a high-speed serial I/O port that permits asynchronous or isosynchronous communication between the TMS370 and other peripheral devices such as keyboards, display terminal drivers, and RS-232 interfaces. The SCI transmit and receive registers are double-buffered to prevent data collisions. In addition, the TMS370 SCI is a full duplex interface, allowing for simultaneous transmission and reception of data. Parity checking is done with on-chip hardware, eliminating the need for software overhead. The SCI is designed with the ability to do data formatting and integrity checking in hardware, further increasing execution speed.

The SCI module contains four major blocks as shown below: an 8-bit receiver and associated interrupt hardware, an 8-bit transmitter with its interrupt hardware, a programmable clock for setting the baud rate, and frame/format/parity error circuitry.

NOTE:
The TMS370 Family contains two different SCI Modules. The SCI1 Module has three external pins (SCICLK, SCITXD, SCIRXD) while the SCI2 Module contains two external pins (SCITXD, SCIRXD). See the TMS370 Family User's Guide for more information.

Figure 7. SCI1 Block Diagram

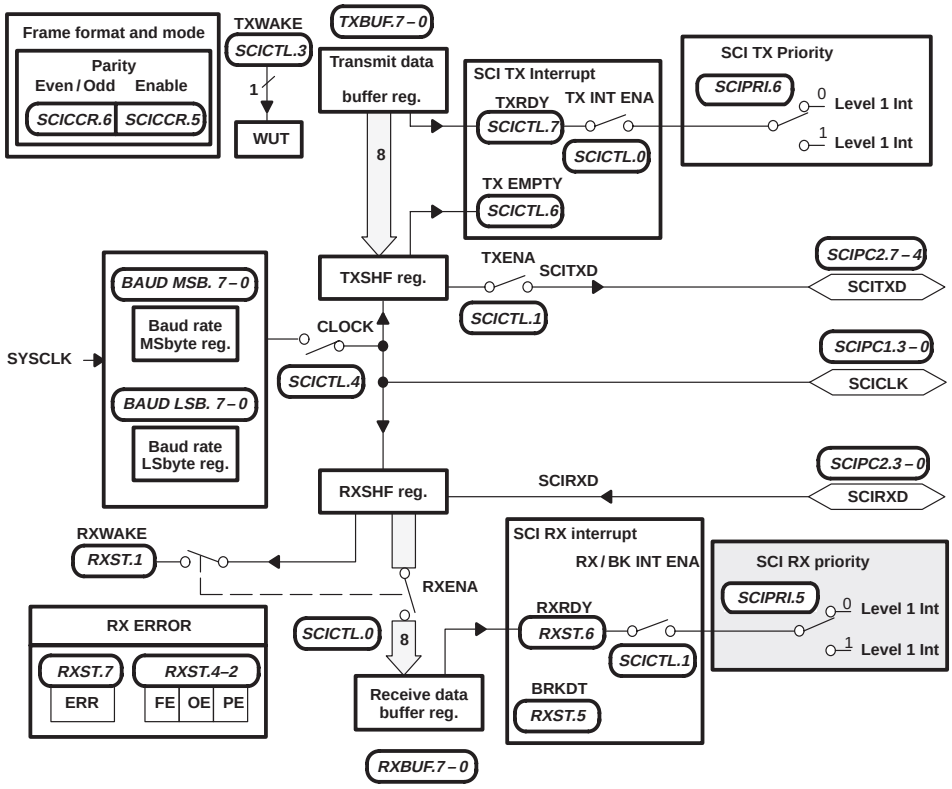

PETITIONER ECOBEE
EX. 1010

Choosing SCI Protocols and Formats

Data formatting is a characteristic of the SCI that sets it off from standard serial communications interfaces such as shift registers. The basic unit of data is called a character and is one to eight bits in length. Each character of data is formatted with a start bit, one or two stop bits, and optional parity and address bits. A character of data along with its formatting information is called a frame. Frames are organized into groups called blocks. A block of data usually begins with an address frame which specifies the destination of the data as determined by the user's protocol.

The start bit is a low bit at the beginning of each frame which marks the beginning of a frame. The SCI uses an NRZ (non return to zero) format, which means that in an inactive state the SCIRxA and SCITxA lines will be held high. Peripherals are expected to pull the SCIRxA and SCITxA lines to a high level when they are not receiving or transmitting on their respective lines.

The different SCI data framing formats are shown in Figure 8.

Figure 8. SCI Data Frame Formats

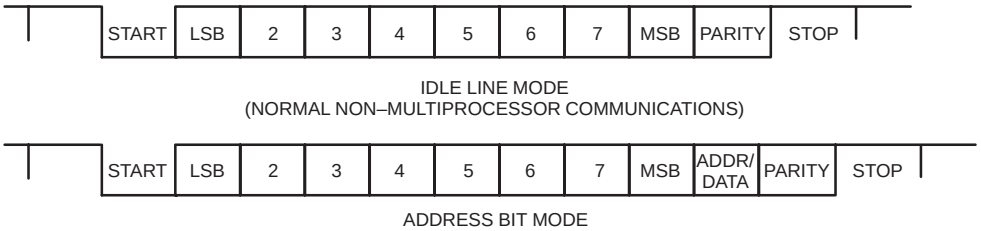

With the exception of the start bit and NRZ formatting, all the elements mentioned above are user programmable. These are controlled by the SCI communication control register (SCICCR).

1. **Protocols:** The TMS370 SCI supports two protocols, the idle line and address bit modes. The two formats differ in how they distinguish the beginning of a block. The address bit mode adds an extra bit to each frame of transmitted data. Setting this bit to a logic 1 means that the current frame is an address. In the idle line mode, an address frame is the first frame following an idle period of ten bits or more. The protocol is selected with the ADDRESS/IDLE WUP (SCICCR.3) bit.

2. **Character Length:** The length of the character to be transmitted is programmable from one to eight bits. Data loaded into TXBUF is automatically right-justified (normal byte format) for transmission. When receiving data in RXBUF the data is also right-justified. Data is transmitted and received LSb first. If the character length is less than eight bits the data value is automatically buffered by leading 0s. Character length is set by programming the SCI CHAR 0–2 (SCICCR.0–2) bits to the values shown in Table 4.

PETITIONER ECOBEE
EX. 1010

Table 4. Transmitter Character Bit Length

SCI Char2	SCI Char1	SCI Char0	Character Length
0	0	0	1
0	0	1	2
0	1	0	3
0	1	1	4
1	0	0	5
1	0	1	6
1	1	0	7
1	1	1	8

3. **Parity**: Parity is a method of checking the integrity of a transmitted/received character. It sends an extra bit with the character to make sure that the sum of 1s in the character is an odd or even number. Parity checking and generation is done on-chip in hardware. It may be enabled or disabled, and if used it can be set odd or even. Bits 5 and 6 of the SCICCR register control the parity checking.

4. **Stop bits:** A stop bit is a high bit of data transmitted at the end of a frame. The number of stop bits can be one or two, depending on your application. In general, data integrity is more secure if two bits are used because the SCI is more likely to catch a framing (SCI synchronization) error. Adding the extra bit increases the number of bits transmitted per character, however, and slows the throughput of the serial port.

The SCI SW RESET Bit

The SCI SW RESET bit (SCICTL.5) is used to reset the condition of the SCI state machine and operating flags. Writing a 0 to this bit sets the operating flags to their reset state and halts the operation of the SCI. This must be done before using the SCI for the first time or after a system RESET to assure the state of the SCI. Writing a 1 to the bit releases the SCI state machine and allows the SCI to resume operation.

It is good practice to reset the SCI by writing a 0 to the SCI SW RESET bit before setting up the control registers. The registers are then set to the desired value and a 1 is written to the SCI SW RESET bit to release the SCI. This stops the operation of the SCI while it is being configured initially. The SCICTL control register values can be set in the same instruction that sets the SCI SW RESET bit to 1.

PETITIONER ECOBEE
EX. 1010

Operating Modes of the SCI

The SCI has two modes of operation. The first, asynchronous, is the most commonly used mode and requires no synchronizing clock between the TMS370 and a peripheral device. When transmitting in the asynchronous mode, each bit is held for 16 shift-clock cycles. This repetition ensures that the data will be present long enough for the unsynchronized receiver to get valid data.

In the isosynchronous mode, a common clock is used to increase system throughput by synchronizing the data transfer between the TMS370 and another serial port. In this mode, one bit of the frame is shifted out on every shift-clock cycle. Using the isosynchronous mode gives a data transfer rate 16 times the corresponding asynchronous SCICLK rate, but requires an extra line to carry the SCICLK signal. The isosynchronous mode is superior to simpler synchronous communications such as the SPI in that you can achieve near synchronous communication speeds but still use formatting to assure data integrity. The format for asynchronous and isosynchronous communications is shown in Figures 9 and 10.

Figure 9. Asynchronous Communication Format

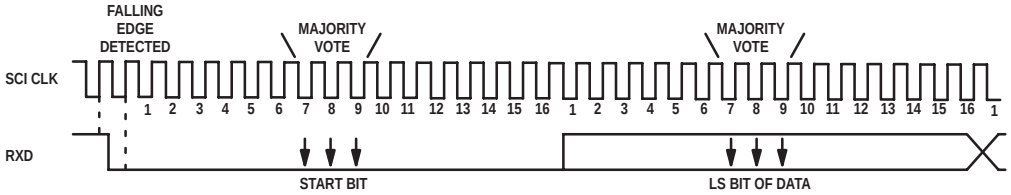

Figure 10. Isosynchronous Communication Format

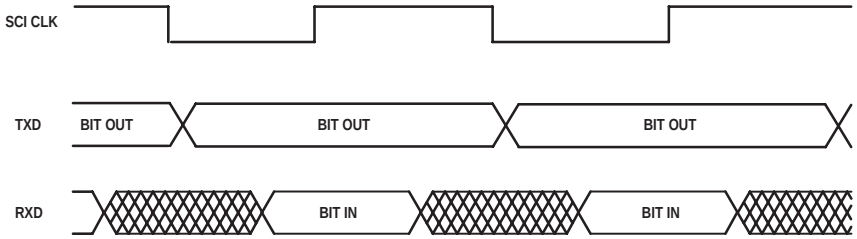

PETITIONER ECOBEE
EX. 1010

Setting the SCICLK Pins and Baud Rate

The SCICLK is usually configured internally for asynchronous communications, but can be external if your application requires it. For isosynchronous communications, the clock can be configured internally or externally, depending on whether the TMS370 will be issuing the clock signal. If the SCICLK pin is not configured as the serial clock (SCICLK FUNCTION = 0), then the pin may be used for general purpose I/O by setting SCICLK DATA DIR (SCIPC1.0) to the appropriate value and reading or writing to SCICLK DATA IN or DATA OUT. When the SCICLK is enabled (SCICLK FUNCTION = 1), the contents of SCICLK DATA DIR, DATA IN, and DATA OUT are ignored.

Even though the clock is configured internally and is independent in the asynchronous mode, it is necessary to have the baud rates set to exactly the same value in the transmitting and receiving devices so that the receivers can synchronize correctly on the frames. This holds whether communications are between two TMS370s or a TMS370 and a different peripheral device. The baud rate is set by writing a 16-bit value to the baud rate select registers: BAUDMSB and BAUDLSB. The equations used to calculate the baud rate register values are shown below:

Asynchronous baud rate = SYSCLK / [(BAUD RATE REG + 1) x 32]

Isosynchronous baud rate = SYSCLK / [(BAUD RATE REG + 1) x 2]

Table 5 gives the baud rate register values for common asynchronous baud rates and frequencies. The values for isosynchronous baud rates can be similarly calculated.

Table 5. Asynchronous Baud Rate Register Values for Common SCI Baud Rates

Baud Rate	SYSCLK Frequency (MHz)							
	2.4576 / 4		7.3728 / 4		19.6608 / 4		20.00 / 4	
	BR Reg	%ERR	BR Reg	%ERR	BR Reg	%ERR	BR Reg	%ERR
75	255	0.00	767	0.00	2047	0.00	2082	0.02
300	63	0.00	191	0.00	511	0.00	520	-0.03
600	31	0.00	95	0.00	255	0.00	259	0.16
1200	15	0.00	47	0.00	127	0.00	129	0.16
2400	7	0.00	23	0.00	63	0.00	64	0.16
4800	3	0.00	11	0.00	31	0.00	32	-1.38
9600	1	0.00	5	0.00	15	0.00	15	1.73
19200	0	0.00	2	0.00	7	0.00	7	1.73
38400	-	-	-	-	3	0.00	3	1.73
156000	-	-	-	-	-	-	0	0.16

BR Reg = 16 bit baud rate register value.

PETITIONER ECOBEE
EX. 1010

NOTE:
When using an externally generated SCICLK in isosynchronous mode, the maximum speed at which the SCICLK can run is limited to SYSCLK/10. This is necessary so that the internal clocks of the SCI have time to synchronize with the external clock. For this reason, use the TMS370 to drive the master serial clock in a system where maximum throughput is a major concern.

SCI Receiver Operation

A flowchart showing the operation of the receiver is shown in Figure 11. When the SCI senses a falling edge on SCIRXD, the flow shown in the figure begins. Depending on the protocol and format, the receiver checks for transmission errors and loads the data into RXSHF, the receiver shift register. When the number of bits specified by the SCI character length control bit have been read in, the contents of RXSHF are transferred to the receiver data buffer, RXBUF, and the RXRDY flag is set to show that the data value is ready to be read. An SCI receiver interrupt is generated if the SCI receiver interrupt is enabled.

If errors are detected, the RXERROR and specific error (parity, framing, overrun, and break) flags are set by the hardware and operation continues. Error control is done in software. If multiprocessor communications are being used, frames received are checked to see if they are address frames and the appropriate bits are set.

PETITIONER ECOBEE
EX. 1010

Figure 11. Receiver Operation Flowchart

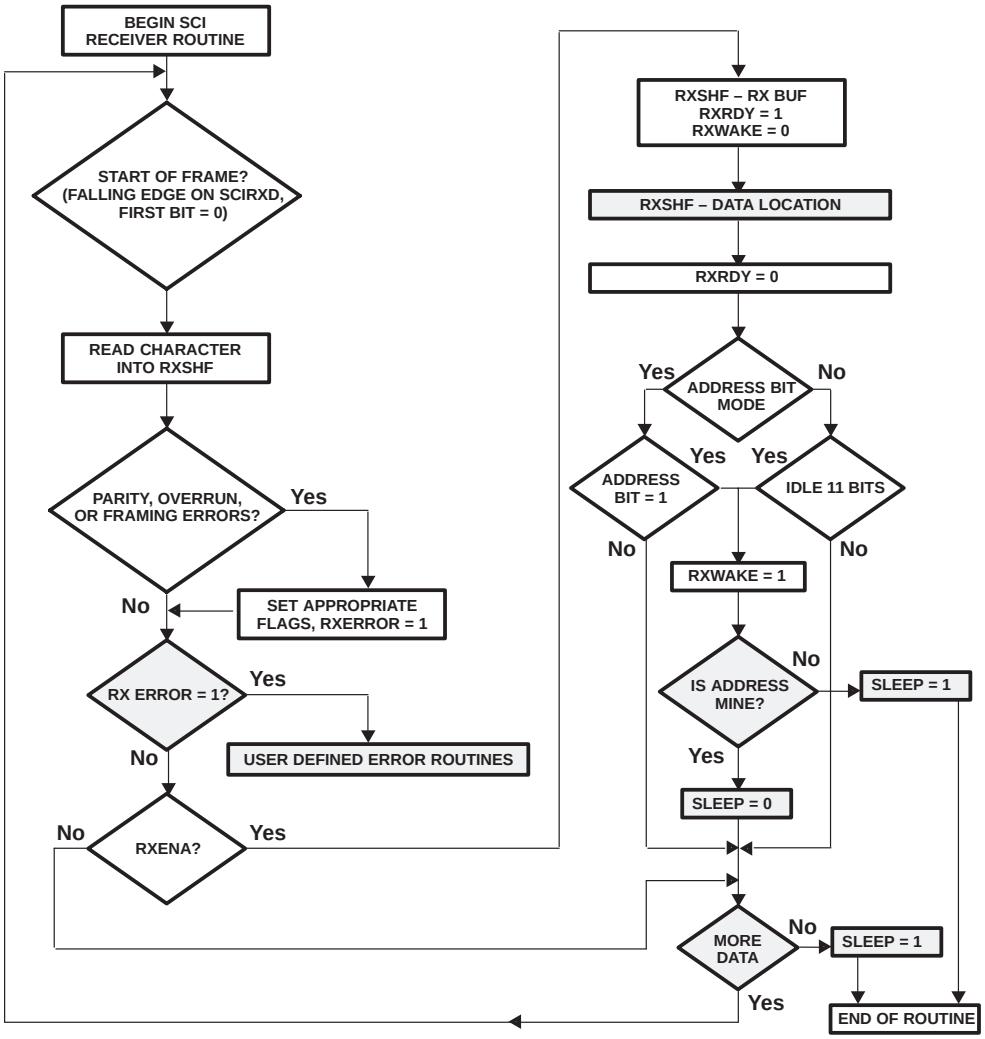

SHADED = SOFTWARE

PETITIONER ECOBEE
EX. 1010

SCI Transmitter Operation

A flowchart of the operation of the SCI transmitter is shown in Figure 12. The SCI transmitter is activated by loading the transmitter buffer, TXBUF, which clears the TXRDY flag. When TXSHF, the transmitter shift register, is empty the contents of TXBUF are latched into TXSHF and the TXRDY flag is set to indicate the transmitter is ready for a new character. Depending on the protocol and format, the transmitter formats the data as needed to signal the beginning and end of frames of data.

PETITIONER ECOBEE
EX. 1010

Figure 12. Transmitter Operation Flowchart

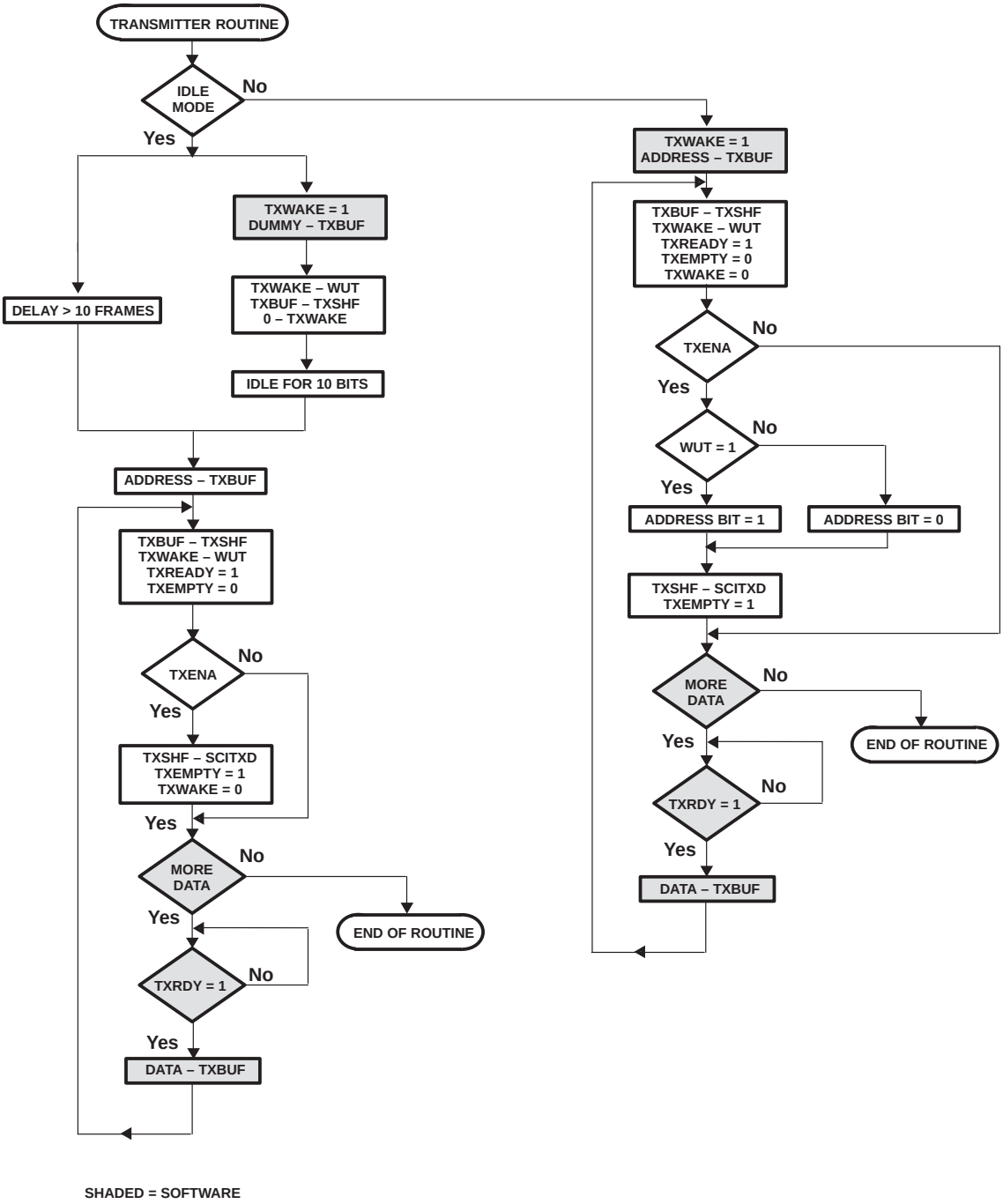

PETITIONER ECOBEE
EX. 1010

Data transmission is initiated by moving data into TXBUF. The status of the TXWAKE flag, set prior to writing to TXBUF, determines whether or not the current character is an address or data. The contents of TXWAKE and TXBUF are transferred to WUT (wake up temporary) and TXSHF, respectively, to be shifted out as soon as the current transmission is complete. WUT and TXSHF are the actual transmission buffers and cannot be written to directly, only through TXWAKE and TXBUF. This double buffering of the transmission registers allows you to begin setting up for the transmission of a new character before the previous character has been shifted out of TXSHF, speeding up data transfer. Data is shifted out of TXSHF, LSb first.

It should be noted that there are two ways to initiate a block signal when using the idle line protocol. The first is to write a 1 to the TXWAKE bit and then write dummy data to the TXBUF register. The transmitter will idle for 10 bits, signalling a block start. The other method is to simply wait for a period of time greater than the transmitter takes to transmit 10 bits (this is determined from the SCICLK frequency) and write the address to TXBUF.

SCI Interrupts and Flags

The SCI interrupt logic generates interrupt flags when it receives or transmits a complete character as determined by the SCI character length. This provides a convenient and efficient way of timing and controlling the operation of the SCI transmitter and receiver. The interrupt flags for the transmitter and receiver are TXRDY (TXCTL.7) and RXRDY (RXCTL.7), respectively. The TXRDY flag is set when a character is transferred to TXSHF and TXBUF is ready to receive a new character. In addition, when both the TXBUF and TXSHF registers are empty, the TX EMPTY flag (TXCTL.6) is set. The TXRDY flag signals that you can write another character to TXBUF, and the TXEMPTY flag is set when no new data value has been written to TXBUF and the SCI has finished transmitting.

When a new character has been received and shifted into RXBUF, the RXRDY flag is set. The status of data transfers can be checked by polling the flags. In this way, the risk of a receiver overrun or transmitter corruption can be avoided.

The interrupts associated with the receiver and transmitter can be enabled or disabled using the SCI RX INT ENA (RXCTL.0) and SCI TX INT ENA (TXTCL.0) bits, respectively. When the interrupts are enabled and the flag is set, that particular interrupt is asserted. The priority of the SCI RX and TX interrupts can be set independently using the SCI TX and RX priority bits (SCIPRI.5-6). Note that unless the RXENA bit (SCICTL.0) is set, the received data will not be shifted into RXBUF and no interrupt will be generated. Data loaded into TXBUF will not be shifted out unless the TXENA bit is set.

PETITIONER ECOBEE
EX. 1010

Multiprocessor Communications

Using the SLEEP Bit

Quite often several serial ports will be tied to a common line, and a method is needed to restrict the conversation between two devices to avoid a communications conflict. The SLEEP flag can be used to disable an SCI until the start of a new block, at which time an address check can be made to see if that particular receiver is being addressed. The SLEEP bit is used in both idle and address bit modes.

For the single microcontroller system, SLEEP is initialized to 0. In a multiprocessor environment, the SCI uses the SLEEP (SCICTL.2) flag to control when a specific receiver is addressed. In a multiprocessor system, the SLEEP flag is initialized to a 1. Until a sleeping receiver receives a block start signal, the following happens:

1. SCIRX continues to load RXSHF.
2. No format errors are recognized, but BRKDT is.
3. Data is shifted into RXBUF, but RXRDY is not set.
4. RXINT is disabled.

A block start signal acts like an alarm clock for the sleeping SCI receiver. A block start signal signifies that the current signal is an address. In the address bit mode, this is signalled by address bit = 1. In the idle mode, a block starts when a low bit is detected after an idle period of 10 bits or more. When a block start signal is received, the data received (an address) is loaded normally, including the RXWAKE flag. At this point, the receiver interrupt will be called if enabled and the address byte received is checked with software against the key for that particular processor. If it matches, the software needs to clear the SLEEP bit and return to the main loop to read the rest of the block; if not, put the part back to bed (SLEEP = 1), return to the program, and wait until another block start is detected. Clearing the SLEEP bit informs the microcontroller that the following frames are data and not addresses.

PETITIONER ECOBEE
EX. 1010

Using the TXWAKE Bit

The TXWAKE bit is used by the transmitter to format the data going out as an address frame or a data frame. If a data character is being transmitted, the TXWAKE flag is left at 0. If an address needs to be sent, TXWAKE is set to 1 before the address byte is loaded into TXBUF. The TXWAKE flag is automatically cleared when the byte is shifted from TXBUF to TXSHF.

Depending on which protocol you are using (address bit or idle), setting the TXWAKE bit has different effects. If the address bit mode is being used, the address bit will be set for that frame as it is transmitted out. If the idle bit mode is being used, the transmitter goes idle (transmits a logic high) for a period of 10 bits when TXBUF is loaded. This is, in effect, a dummy write; the next data written to TXBUF will be the address and will be transmitted out as the address frame. Depending on your application, it may not be necessary to use the TXWAKE bit. If your design has only one peripheral or device tied to the SCI, then address bytes are not needed. TXWAKE can be left at 0 for the duration of the transmission and no address bits will be sent.

Disabling the SCI Transmitter

Because the SCI uses the NRZ format, the transmitter is actually outputting a logic 1 when data is not being transmitted. If the SCITXD line is going to be tied to a bus, it will be necessary to put the line in a three-state condition so that the line is not constantly being driven high. This is done by reconfiguring the SCITX pin as general I/O after transmission. Setting the SCITXD FUNCTION bit = 0 and the SCITXD DATA DIR = 0 will put the pin into an input configuration that will prevent bus conflicts from occurring.

Choosing the Right Protocol

Because no idle period is needed between blocks, the address mode is more efficient when sending small blocks of data, typically fewer than 10 frames. When sending larger blocks, however, it is usually more efficient to use the idle line mode because the extra bit per frame used in address bit mode becomes more significant. If the receiver does not change very often, the idle line mode is probably the best choice because address bytes are not sent that often. For single-processor applications, the idle line mode is usually used. The address bit mode, because it is formatted to accommodate addressing easily, is frequently used for multiprocessor designs.

An important consideration to take into account when using the idle line mode is the amount of time it takes for software overhead. If the transmitter must service a lot of code between transmissions, then there is a possibility that the transmitter will inadvertently remain idle for ten bits or more, accidentally sending a block start signal. This becomes more and more likely as the transmitter service routines become more involved and the baud rate increases. If you are going to be using complicated transmitter routines, it may be a good idea to use the address bit protocol, even though the extra bit may seem unnecessary in the short run.

The TMS370 SCI was designed for maximum compatibility with existing microcontroller protocols. For the purposes of interfacing to other microcontrollers, the address-bit mode is compatible with the I8051 protocol. The idle line mode is in accordance with the MC6801 protocol.

PETITIONER ECOBEE
EX. 1010

Timing the Flow of Data

Transmitting

A few items need to be taken into consideration when using the SCI transmitter. It is important not to write data to the TXBUF register before it has shifted its data to the TXSHF register. This becomes more likely as the SCI baud rate decreases and it takes longer to shift out the data. Unlike the SCI receiver, there is no transmitter overrun flag.

There are two ways to make sure that characters do not get overwritten in TXBUF. The first is to use transmitter interrupts to control the loading of TXBUF. By setting TX INT ENA (TXCTL.0), the TX interrupt will be called when TXRDY is set. Because TXRDY is only set (and the TX interrupt called) when TXBUF is ready to receive a new character, there is no possibility of an overwrite if the instruction is placed in the interrupt routine. Also, in a large program that transmits from many locations in its code, interrupt-driven transmit routines are more memory efficient than other methods.

The second way to prevent transmitter overruns is to poll the TXRDY flag (TXCTL.6). If using interrupt-driven routines is not practical in your application, or the program can do nothing until the data is transmitted, it may be more practical to load TXBUF and simply loop until the TXRDY flag is set. Use the BTJZ instruction to loop on itself until the flag is set. Several of the application examples shown later use this technique.

Receiving

By far the most important thing to remember when receiving data is to keep your receiver routine short. If a large amount of data is being received, store it in a table and manipulate it later. As soon as the receiver interrupt is called, move the data out of RXBUF and store it in another register. This will prevent new data from overwriting data that is already in RXBUF and causing a receiver overrun.

Detecting Transmission Errors

The advantage of formatting data is the ability to detect communication errors when they occur. The SCI has hardware designed features that make it easy to detect such errors. The SCI receiver has flags to detect the following errors:

1. Parity: The parity error bit, PE (RXCTL.2), is set when the number of 1s plus the parity bit adds up incorrectly, depending on whether the parity is odd or even according to the EVEN/ODD PARITY bit (SCICCR.6). Parity checking can be disabled with the PARITY ENABLE bit (SCICCR.5).
2. Receiver Overrun: If data is not read from RXBUF before new data is received, the overrun error bit, OE (RXCTL.3), will be set. This signifies that data received was lost before it could be read.
3. Framing: A framing error occurs when the receiver loses synchronization with the transmitter. The framing error bit, FE (RXCTL.4), is set when the receiver does not detect a stop bit (or bits) as expected at the end of a frame.
4. Break Detect**:** The break detect flag, BRKDT (RXCTL.6), is set when the receiver detects 11 continuous low bits after the FE flag is set. Because of the NRZ communications format, this signifies a serious error in either the transmitter or the transmission line. This will cause an interrupt if enabled.
5. RX ERROR: Any time any of the above flags are set, the RX ERROR flag is set. The RX ERROR flag provides an easy and quick way to see if an error has occurred without polling each bit.

PETITIONER ECOBEE
EX. 1010

All of the above flags are cleared by reading RXBUF, executing an SCI SW RESET, or executing a system reset.

Of course, if data integrity is not an issue, you can ignore checking for errors. Disabling parity checking decreases the number of bits sent per frame so, in effect, a faster transmission rate is achieved. In most cases, however, you will want to make sure your data has been transmitted correctly and leave parity checking enabled.

In addition to on-chip error checking, there are a number of coding methods that allow faster data transfer but still ensure data integrity. Encoding the data before it is sent can speed up the transfer without sacrificing quality. Encoding methods such as cyclic redundancy checking (CRC) or block encoding can be found in most good books on digital communications. The checksum method of error checking involves checking parity on a block of data as well as the individual characters.

What to Do With Transmission Errors

Once you get an error, what do you do? Unfortunately, with digital communications there is no easy way to correct bad data, and then it can only be done if complicated encoding schemes are used. The simplest way to correct the data is to have the transmitter retransmit the data. This is usually done by reserving a special NAK (negative acknowledge) character in the data to signal when an error has been detected by the receiver. When the receiver detects an error, it transmits the NAK character to the other device, signaling it to retransmit the data.

PETITIONER ECOBEE
EX. 1010

SCI Module Software Examples

The following are examples of the various modes of operation and common software routines used in the implementation of the SCI. The register equates are shown below.

Common Equates

```
SCICCR    .equ   P050   ;SCI communication control register
SCICTL    .equ   P051   ;SCI operation control register
BAUDMSB   .equ   P052   ;Baud rate select XSB register
BAUDLSB   .equ   P053   ;Baud rate select LSS register
TXCTL     .equ   P054   ;Transmitter interrupt control and status register
RXCTL     .equ   P055   ;Receiver interrupt control and status register
RXBUF     .equ   P057   ;Receiver data buffer register
TXBUF     .equ   P059   ;Transmit data buffer register
SCIPC1    .equ   P05D   ;SCI port control register 1
SCIPC2    .equ   P05E   ;SCI port control register 2
SCIPRI    .equ   P05F   ;SCI priority control register
```


PETITIONER ECOBEE
EX. 1010

SLEEP Bit – Multiprocessing Control

By using the SLEEP bit (SCICTL2), several microprocessors can be tied to common SCIRXD and SCITXD lines. This example shows a slave microcontroller set to listen for its own address and load its RAM with a block of data of a fixed size when it is addressed. The data is received through the use of an interrupt routine. When the part recognizes its own address, it clears the SLEEP bit and subsequent characters are loaded into memory starting at register DATA+BLOCKSIZE−1 and continuing down to register DATA. The SLEEP bit is then set and the routine waits for the next address.

Routine

```
B1200     .equ   2082
          MOV    #007h,SCICCR        ;l stop bit, no parity, isosynchronous,
                                     ; idle line protocol, 8–bit characters
          MOV    #00h,SCICTL         ;SCI SW RESET
          MOV    #HI(B1200),BAUDMSB  ;Set for 1200 baud @ 5 MHz.
          MOV    #LO(B1200),BAUDLSB  ;
          MOV    #001h,RXCTL         ;Enable SCIRX INT.
          MOV    #002h,SCIPC2        ;Set SCIRXD as input.
          MOV    #060h,SCIPRI        ;SCIRX/SCITX interrupts low priority.
          MOV    #033h,SCICTL        ;Release SCI, SLEEP=0,RXENA,TXENA.

          ....                       ;Main code here

RXINT                                ;Receiver interrupt routine
          BTJZ   #004h,SCICTL,AWAKE  ;If SLEEP=0, do not check address.
          XOR    #ADDRESS,RXBUF      ;Is address mine?
          JNE DONE                   ;If not, go back to sleep.
          MOV    #011h,SCICTL        ;Clear SLEEP bit.
          MOV    #BLOCKSIZE–1,BCOUNT ;Get size of block (-l for address).
          JMP    DONE
                                     ;Address is mine, start reading data.
AWAKE     PUSH   B                   ;Save contents of A & B registers.
          PUSH   A
          MOV    BCOUNT,B            ;Put pointer and data in temp registers.
          MOV    RXBUF,A
          MOV    A,DATA(B)           ;Store character in DATAIN table.
          POP    A                   ;Restore contents of A & B register.
          POP    B
          DJNZ   BCOUNT,DONE         ;Wait for next character.
          MOV    #015h,SCICTL        ;Put part back to sleep.
DONE      RTI                        ;Return from interrupt.
```


PETITIONER ECOBEE
EX. 1010

System Controller Configuration

In this example, the device is setup as a system controller that requests data from specific devices using the idle line protocol. The address of the device to be interrogated is stored in ADDROUT. The address is sent out and the controller waits for the data to be sent to it. If an error occurs, the controller asks for the data to be transmitted again.

Routine

```
B1200     .equ   129
          MOV    #00h,SCICTL          ;SCI SW RESET
          MOV    #077h,SCICCR         ;1 stop bit, even parity, asynchronous,
                                      ;idle line protocol, 8–bit characters

          MOV    #HI(B1200),BAUDMSB   ;Set for 1200 baud.
          MOV    #LO(B1200),BAUDLSB   ;
          MOV    #001h,RXCTL          ;Enable SCIRX INT.
          MOV    #002h,SCIPC2         ;Set SCIRXD as input.
          MOV    #060h,SCIPRI         ;SCIRX/SCITX interrupts low priority.
          MOV    #032h,SCICTL         ;Internal clock, TXENA, RXENA.

          ...                         ;Main code here.
          CALL   XMIT                 ;Call subroutine to transmit character.
          ...                         ;More main code here.

XMIT      MOV    #01Ah,SCICTL         ;Set TXWAKE: address transmission.
          MOV    #000h,TXBUF          ;Dummy write to cause SCITX idle.
          MOV    ADDROUT,TXBUF        ;Send address.

WAIT      BTJZ   #040h,RXCTL,WAIT     ;Wait for answer.
          BTJO   #080h,RXCTL,XMIT     ;If error occurred, retransmit.
          MOV    RXBUF,DATAIN         ;Save received data.
          RTS                         ;Return to main program block.
```


PETITIONER ECOBEE
EX. 1010

Nine-Bit Data Protocol

Data transfer can be made more efficient by transferring more bits per character. By using the address bit mode, an extra bit of data can be added to each character, creating in effect a 9-bit character protocol. Extra bits, BITNINE for the transmitter and HIGHBIT for the receiver, are used to hold the ninth bits and can be assigned to any unused register. The transmit and receive routines are similar to the 8-bit character length routines with the addition of code to monitor the ninth bit. The transmitter routine, upon finding BITNINE = 1, will set the TXWAKE bit. This will signal the transmitter that address character is going out and to set the address bit = 1. If the TXWAKE flag is not set, the address bit will remain 0. The receiver checks to see the value of the ninth bit by polling the status of the RXWAKE flag. If it is set, then the received character is an address and the ninth bit is set; otherwise, it is not an address and the ninth bit is 0.

Routine

```
B1200     .equ   129
          MOV    #000h,SCICTL        ;SCI SW RESET
          MOV    #07Fh,SCICCR        ;1 stop bit, even parity, asynchronous,
                                     ;address bit protocol, 8–bit characters.
          MOV    #HI(B1200),BAUDMSB  ;Set for 1200 baud.
          MOV    #LO(B1200),BAUDLSB  ;
          MOV    #001h,RXCTL         ;Enable SCIRX INT.
          MOV    #022h,SCIPC2        ;Set SCIRXD as input.
          MOV    #060h,SCIPRI        ;SCIRX/SCITX interrupts low priority.
          MOV    #033h,SCICTL        ;Internal clock, TXENA, RXENA.

          ...                        ;Main code here.

XMITTER                              ;Transmitter routine.
          JBIT0  BITNINE,BITLOW      ;Check to see if ninth bit=0.
          MOV    #03Bh,SCICTL        ;Ninth bit is high, set TXWAKE flag.
BITLOW    MOV    DATAOUT,TXBUF       ;Load data to be transmitted.
          RTS                        ;End of subroutine. TXWAKE flag is
                                     ; cleared automatically.
RCVR                                 ;Receiver routine.
          SBIT1  HIGHBIT             ;Address bit is set, ninth bit=1.
          BTJO   #002h,RXCTL,GETCHAR ;Address bit not set.
          SBIT0  HIGHBIT             ;HIGHBIT=0.
          JMP    GETCHAR
GETCHAR   MOV    RXBUF,DATAIN        ;Save other 8 bits of data. RXWAKE is
                                     ;cleared automatically.
          RTS
```


PETITIONER ECOBEE
EX. 1010

HALT Mode Wakeup Using the SCI Receiver

In many applications, power consumption is a major concern. The TMS370 has two low power modes, HALT and STANDBY, which stop execution of various modules in the device. This greatly reduces the power used by the part. For a complete description of the powerdown/idle modes, see the *TMS370 Family User's Guide*. In a powerdown mode, the part ignores everything but a few select interrupts. The SCIRX interrupt is recognized in the HALT mode and can be used to wake up the device upon receipt of a falling edge on SCIRXD. In this way, the part can be put into a low power mode and only be activated when another device wants to talk to it. The following code shows how to put a TMS370Cx5x into HALT mode to be awakened upon a SCIRXD interrupt.

NOTE:
You must enable interrupts before executing the IDLE instruction or the part will not recover from the low power mode (except on a system RESET).

Routine

```
B1200     .equ   129
          MOV    #00h,SCICTL          ;SCI SW RESET
          MOV    #077h,SCICCR         ;1 stop bit, even parity, asynchronous,
                                      ;Idle line protocol, 8-bit characters.
          MOV    #HI(B1200),BAUDMSB   ;Set for 1200 baud.
          MOV    #LO(B12O0),BAUDLSB   ;
          MOV    #001h,RXCTL          ;Enable SCIRX INT.
          MOV    #002h,SCIPC2         ;Set SCIRXD as input.
          MOV    #060h,SCIPRI         ;SCIRX/SCITX interrupts low priority.
          MOV    #031h,SCICTL         ;Internal clock, RXENA
          OR     #045h,SCCR2          ;Configure for STANDBY mode.
          EINT                        ;Interrupts must be enabled to exit
                                      ;HALT mode.
          IDLE                        ;Go into low power mode.  Part will stay
                                      ;in standby mode until a valid standby
                                      ;interrupt is requested, including
                                      ;SCIRX.
```


PETITIONER ECOBEE
EX. 1010

SCI Module Specific Applications

RS-232-C Interface

Interface TMS370C050 to RS-232-C Connection

The most common of the myriad of serial interfaces is the RS-232-C. Over time it has become an industry standard for digital communications, used for everything from PCs to telecommunication. This example will show the software and hardware necessary to connect a TMS370C050 to an RS-232-C interface. External hardware is needed because RS-232-C specifications call for non-TTL compatible voltage levels. This example uses the Maxim MAX232 RS-232 line driver/receiver to buffer the TTL levels to the –12 V to 12 V levels needed for RS-232 communications. The TMS370C050 will be used as the DCE (data communications equipment) end of the communications link, that is, as a slave to another controller. For more information about the RS-232-C interface, consult the References Section for books on digital communications.

RS-232-C specifications are vague about the exact uses and protocols associated with the pins. This example shows a common format, using the CTS (clear to send) and DTR (data terminal ready) lines for handshaking. The transmitted data and received data lines are used for the actual data transmission. In this example, as in most RS-232-C communications, the transmission are asynchronous and need no synchronizing clocks. When the DTR line is pulled high, the controller is ready to receive data. Otherwise, the TMS370C050 stops data transmission until the controller pulls the line high again. The TMS370C050 can also halt data transmission from the controller by pulling the CTS line low. The SCICLK and seven analog input pins are configured as general I/O pins for the CTS and DTR signals, respectively. The basic configuration for an RS-232-C connection is shown in Figure 13.

PETITIONER ECOBEE
EX. 1010

SCI Module Specific Applications

Figure 13. TMS370C050 – RS-232-C Interface

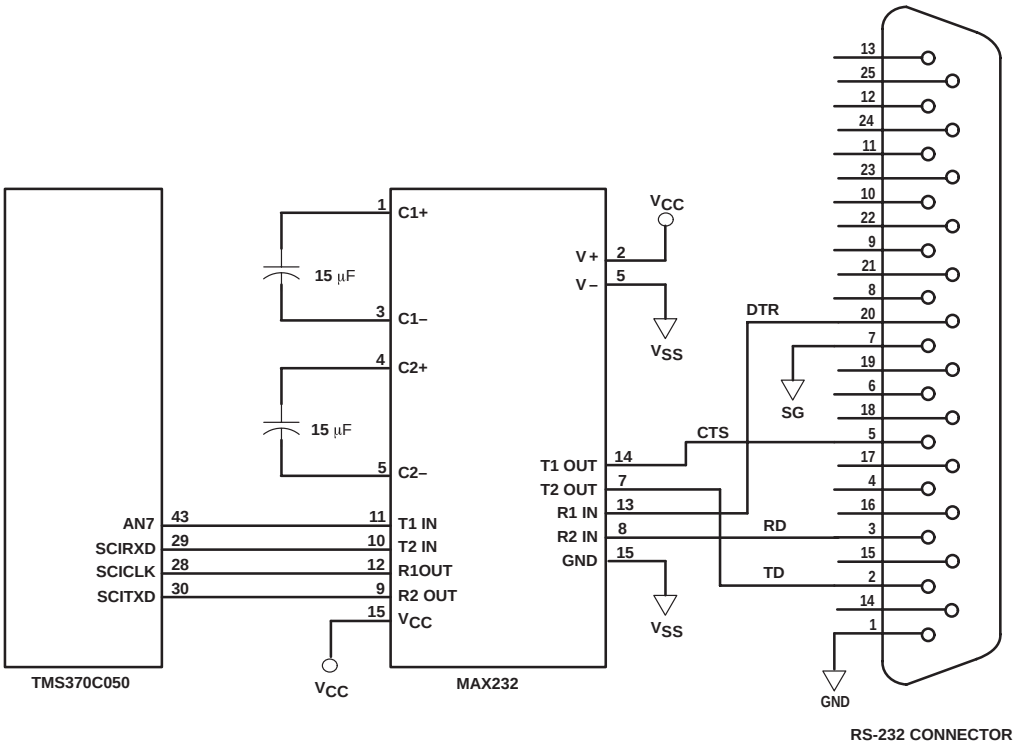

PETITIONER ECOBEE
EX. 1010

The framework of a program for controlling communications between the TMS370C050 and a DTE (data terminal equipment) configured device is shown below.

Routine

```
          .title "RS-232-C Interface"

;         This example shows the skeleton of a program for implementing an
;         RS-232-C interface in hardware and software.

;         Set up EQUATE table for peripheral file registers used in the
;         program.

SCICCR    .equ   P050                ;SCI configuration control register
SCICTL    .equ   P051                ;SCI operation control register
BAUDMSB   .equ   P052                ;Baud rate select MSB register
BAUDLSB   .equ   P053                ;Baud rate select LSB register
TXCTL     .equ   P054                ;Transmitter int. control/status
                                     ;register
RXCTL     .equ   P055                ;Receiver int. control/status register
RXBUF     .equ   P057                ;Receiver data buffer register
TXBUF     .equ   P059                ;Transmit data buffer register
SCIPC1    .equ   P05D                ;SCI port control register 1
SCIPC2    .equ   P05E                ;SCI port control register 2

;         Define registers & constants used in program

DATAIN    .equ   R2                  ;Temporary register for received data
DATAOUT   .equ   R3                  ;Temporary register for transmitted data
B9600     .equ   15                  ;Baud rate register value for 9600 baud.

          .text  07000h

START     DINT

;         SCI Initialization

          MOV    #000h,SCICTL        ;SCI SW RESET
          MOV    #077h,SCICCR        ;stop bit, even parity, asynchronous,
```


PETITIONER ECOBEE
EX. 1010

```
                                ;Idle line protocol, 8-bit characters
          MOV    #HI(B9600),BAUDMSB  ;Set for 9600 baud (@ 4.9152MHz)
          MOV    #LO(B9600),BAUDLSB  ;
          MOV    #002h,SCIPC1        ;Set SCICLK as function pin.
          MOV    #022h,SCIPC2        ;Set SCIRXD,SCITXD as input.
          MOV    #060h,SCIPRI        ;SCIRX interrupt low priority
          MOV    #033h,SCICTL        ;Release SCI, set internal clock,
                                     ;Sleep=0,RXENA,TXENA

          MOV    #200,B              ;Start stack pointer at R200.
          LDSP
          EINT                        ;Enable interrupts

;      Main part of program manages and stores the data. When the program is
;      ready to receive new data it calls subroutine RXCHAR. When the
;      program is ready to transmit, it loads register DATA OUT and calls
;      subroutine TXCHAR.

MAIN

          ...
RECEIVE   CALL   RXCHAR              ;Get next character.
          MOV    A,DATAIN
          ...
XMIT      MOV    DATAOUT,A
          CALL   TXCHAR              ;Transmit character.
          ...

          JMP    MAIN

;      SCI receiver subroutine.
;        The subroutine brings CTS high to signal that the TMS370 is ready to
;        receive data, then it waits until a character is received. After a
;        character has been received, CTS is pulled low again to stop
;        transmission by the other device, and the character is saved in
;        register A.

RXCHAR    MOV    #005h,SCIPC1        ;Set CTS high. (TMS370 ready to receive)
RXWAIT    BTJZ   #040h,RXCTL,RXWAIT  ;Loop until character received.
          MOV    #001h,SCIPC1        ;Set CTS low to stop transmission.
```


PETITIONER ECOBEE
EX. 1010

```
          MOV    RXBUF,A             ;Save received character.
          RTS

;      SCI transmitter subroutine.
;        The subroutine waits for the other device to bring the DTR line high
;        before transmitting. The character is then sent and the TXCTL
;      register is polled to make sure the character has been transmitted
;      before continuing.

TXCHAR    BTJZ   #080h,ADIN,TXCHAR   ;Wait for DTR to go high.
TXWAIT    BTJZ   #080h,TXCTL,TXWAIT  ;Wait until previous characters are
                                     ;transmitted out.
          MOV    A,TXBUF             ;Send out the character.
          RTS

;         Set up interrupt vector addresses.

          .sect  "VECTORS",07FF2h
          .word  START               ;No interrupts are used:
          .word  START               ;All vectors will jump to 'START'.
          .word  START
          .word  START
          .word  START
          .word  START
```


PETITIONER ECOBEE
EX. 1010

Dumb Terminal Driver

Use TMS370C050 SCI to Interface to Dumb Terminal

The power of the TMS370C050 microcontroller allows it to control a large number of tasks at the same time. The on-chip peripherals can operate independently of each other, releasing the CPU to do other tasks. This example shows a TMS370C050 microcontroller configured as a dumb terminal driver. ASCII data is received from a terminal and stored in a buffer. Data to be transmitted is stored in another buffer and shifted out of the SCI when the terminal is ready to receive. An example of how the TMS370C050 and the terminal are connected is shown in Figure 14.

Figure 14. Terminal Interface Example

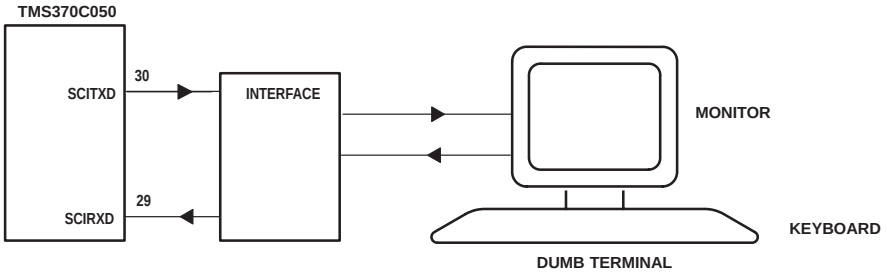

This example uses the X-On/X-Off method of handshaking. Only the data transmit and receive lines are needed because the handshaking is done in software. When either the terminal or TMS370 receive buffers fill up, the respective device forces an X-Off (013h) onto the transmit line to stop the other device from transmitting. When the buffer on either device empties sufficiently, the respective device transmits an X-On character (011h) and the other device begins transmitting again. This simple and effective handshaking technique eliminates the need for additional signals and/or hardware to control the transmission. Because the receive and transmit routines are independent and interrupt driven, they can be combined with other routines to expand the uses beyond that of a simple terminal controller.

The example shown below is the framework for a terminal controller showing the code necessary for receiving from and transmitting to the terminal. When the program receives a character, it automatically branches to RXINT, the SCI receiver interrupt routine, where the character is stored in the receiver buffer. If the 32-character receiver buffer contains more than 27 characters, the receiver immediately sends an X-Off signal to the terminal to stop the flow of data to the controller. The 27-character limit is set because the terminal will not recognize the X-Off immediately and may send a few more characters. When the controller is ready to process the received data, it pulls the character from the receiver buffer. If the buffer contains less than four characters and an X-Off had been previously sent, then an X-On signal is sent to the terminal to start data transmission to the controller again.

After the data is manipulated by the controller (special characters added, brightness, or cursor position changed), subroutine TXCHAR is called. This subroutine loads the data into the transmitter buffer and enables the TX interrupt. The program jumps to the interrupt routine where the character is transmitted out. If the terminal has sent an X-Off, the routine waits until an X-On is received to transmit.

PETITIONER ECOBEE
EX. 1010

Routine

```
          .title "SCI Terminal Driver"

;         Set up equate table for peripheral registers used in program.

SCCR0     .equ   P010            ;System configuration register
                                 ;assignments.
SCCR1     .equ   P011
SCCR2     .equ   P012
SCICCR    .equ   P050            ;SCI configuration control register
SCICTL    .equ   P051            ;SCI operation control register
BAUDMSB   .equ   P052            ;Baud rate select MSB register
BAUDLSB   .equ   P053            ;Baud rate select LSB register
TXCTL     .equ   P054            ;Transmitter int. control/status register
RXCTL     .equ   P055            ;Receiver int. control/status register
RXBUF     .equ   P057            ;Receiver data buffer register
TXBUF     .equ   P059            ;Transmit data buffer register
SCIPC1    .equ   P05D            ;SCI port control register 1
SCIPC2    .equ   P05E            ;SCI port control register 2
SCIPRI    .equ   P05F            ;SCI priority control register

;         Allocate register space for registers used in program.  Also mark
;         beginning of spaces to be used by 32-byte data transfer buffers.

COMSTAT   .equ   R2              ;Communications status register
LOCSTAT   .dbit  0,COMSTAT       ;X-Status from local TKS370 (1=Xoff)
REMSTAT   .dbit  1,COMSTAT       ;X-Status from remote terminal (1=Xoff)
RXPTR     .equ   R3              ;Location of last received data in BUFFER.
RXPTRI    .equ   R4              ;Interrupt routine data pointer.
RXDIFF    .equ   R5              ;Number of characters in RXBUFFER
TXPTR     .equ   R6              ;Next location to be transmitted in BUFFER
TXPTRI    .equ   R7              ;Interrupt routine data pointer
TXDIFF    .equ   R8              ;Number of characters in TXBUFFER
RXBUFFER  .equ   R9              ;Beginning of 32-byte receiver data buffer
TXBUFFER  .equ   R41             ;Beginning of 32-byte transmit data buffer

;         Define constants used in program.

TXLIMIT   .equ   27              ;Maximum # of characters in buffers before
```


PETITIONER ECOBEE
EX. 1010

```
RXLIMIT   .equ   27                ;XOFF or XON is sent
RXLIMIT2  .equ   4
XON       .equ   011h              ;Control-Q character
XOFF      .equ   013h              ;Control-S character

          .text  07000h

START     DINT


;         Initialize SCI.

          MOV    #077h,SCICCR      ;1 stop bit, even parity, asynchronous,
                                   ;Idle line protocol, 8-bit characters
          MOV    #000h,SCICTL      ;SCI SW RESET.
          MOV    #000h,BAUDMSB     ;Set for 9600 (@ 5MHz)
          MOV    #00Fh,BAUDLSB     ;
          MOV    #001h,RXCTL       ;Enable SCIRX INT
          MOV    #001h,TXCTL       ;Enable SCITX INT
          MOV    #002h,SCIPC1      ;Set SCICLK as function pin.
          MOV    #022h,SCIPC2      ;Set SCIRXD,SCITXD as input.
          MOV    #050h,SCIPRI      ;SCIRX INT — high priority
                                   ;SCITX INT — low priority

          MOV    #033h,SCICTL      ;Release SCI, internal clock,
                                   ;sleep=0,RXENA,TXENA

;         Clear data registers.

          CLR    COMSTAT           ;Set status flags to XON.
          CLR    RXPTR             ;Clear data pointer registers.
          CLR    RXPTRI
          CLR    RXDIFF
          CLR    TXPTR
          CLR    TXPTRI
          CLR    TXDIFF

          Mov    #200,B            ;Set stack pointer below BUFFER table.
          LDSP
          EINT                     ;Global interrupt enable
                                   ;
```


PETITIONER ECOBEE
EX. 1010

```
;       Place main block of code here. When a character is received the SCI
;       receiver interrupt routine is called, and the character is stored in
;       the data buffer. When the program is ready to process a character
;       that has been received, the subroutine RXCHAR is called.  When a
;       character is ready to be transmitted, the routine TXCHAR is called,
;       and the character is transmitted.

MAIN
;           ...

            CMP    #00H,RXDIFF          ;Characters waiting to be processed?
            JEQ    NORCVR               ;If not, continue on.
            CALL   RXCHAR               ;Pull character from RXBUFFER.
            MOV    A,DATA
NORCVR      NOP

;           ...                         ;Massage data for terminal
                                        ;(formatting, uppercase, etc).

            MOV    DATA,A
            CALL   TXCHAR               ;Place character in TXBUFFER to be
                                        ;transmitted.

            JMP    MAIN

;           SCI Receiver Subroutine.
;           This routine is called whenever the program is ready to process a
;           character in the receiver buffer.

RXCHAR
            BTJO   #0FFh,RXDIFF,CHKXON ;Any characters in buffer?
            JMP    RXCHAR               ;If not, wait.

CHKXON      DEC    RXDIFF               ;One less character in RXBUFFER
            JBIT0  LOCSTAT,GRABCHAR     ;XON already sent? Don't send another.
            CMP    #RXLIMIT2,RXDIFF     ;Receiver buffer emptying?
            JGE    GRABCHAR             ;No, do not send XON.
WAIT1       BTJZ   #080h,TXCTL,WAIT1    ;Wait until present transmission
                                        ;complete.
            MOV    #XON,TXBUF           ;Put XON in transmitter buffer
            SBIT0  LOCSTAT              ;I have sent an XON.
```


PETITIONER ECOBEE
EX. 1010

```
GRABCHAR  PUSH   B
          MOV    RXPTR,B             ;Increment pointer.
          INC    B
          BTJZ   #020h,B,NOROLL1     ;Does RXPTR need to be rolled over?
          MOV    #0,B                ;Yes, reset RXPTR to start of RXBUFFER.
NOROLL1   MOV    B,RXPTR             ;Save new value of RXPTR.
          MOV    *RXBUFFER[B],A      ;Get new value from RXBUFFER.
          POP    B

          RTS

;         SCI Transmitter Subroutine.
;         This routine is called whenever the program is ready to transmit a
;         character to the terminal.

TXCHAR
          CKP    #TXLIMIT,TXDIFF     ;Wait until there is room in buffer.
          JGE    TXCHAR
          PUSH   B
          MOV    TXPTR,B
          INC    B                   ;Next character to be transmitted
          BTJZ   #020h,B,NOROLL2     ;Does TXPTR need to be rolled over?
          MOV    #0,B                ;Reset TXPTR to beginning of TXBUFFER.
NOROLL2   MOV    B,TXPTR             ;Save new value of TXPTR.
          INC    TXDIFF              ;Inc. # of characters to be transmitted.
          MOV    A,*TXBUFFER[B]      ;Save character in transmitter buffer.
          POP    B                   ;Restore value of B.
          OR     #001h,TXCTL         ;Enable TX interrupt.
          RTS                        ;Exit.

;         SCI Transmitter Interrupt Routine.
;         This routine is called whenever the program is ready to transmit a
;         character to the terminal.

TXINT
          JBIT1  REMSTAT,TXEXIT      ;If terminal has sent XOFF, do not
                                     ;transmit.
          PUSH   A
          PUSH   B
          INC    TXPTRI              ;Next BUFFER location
```


PETITIONER ECOBEE
EX. 1010

```
          BTJZ   #020h,TXPTRI,NOROLL3  ;If TXPTRI past end of buffer, clear
                                       ;it.
          CLR    TXPTRI                ;Set TXPTRI to beginning of buffer.
NOROLL3   DEC    TXDIFF                ;If so, nothing to transmit.
          MOV    TXPTRI,B              ;
          MOV    *TXBUFFER[B],A
TXWAIT1   BTJZ   #080h,TXCTL,TXWAIT1 ;Wait until previous characters have
                                       ;finished transmitting.
          MOV    A,TXBUF               ;Transmit character.
          POP    B                     ;Increment TXPTR.
          POP    A                     ;
          BTJO   #0FFh,TXDIFF,TXEXIT ;If no more characters to send,
          AND    #0FEh,TXCTL           ;disable interrupts.
TXEXIT    RTI

;      SCI Receiver Interrupt Service Routine
;
;      This interrupt routine receives characters and checks for XON and
;      XOFF characters sent by the terminal.  The received characters are
;      stored in RXBUFFER for the subroutine RXCHAR to manipulate them.
RXINT
          PUSH   A                     ;Save A register contents.
          MOV    RXBUF,A               ;Grab received character from buffer.
          CMP    #XON,A                ;Was an XON received?
          JNE    TRYXOFF
          SBIT0  REMSTAT               ;Set flag: XON received.
          JMP    RXDONE
TRYXOFF   CMP    #XOFF,A               ;Was an XOFF received?
          JNE    SAVECHAR
          SBIT1  REMSTAT               ;Set flag: XOFF received.
          JMP    RXDONE

SAVECHAR
          PUSH   B                     ;Save B register contents.
          MOV    RXPTRI,B              ;Point to location to store new
                                       ;character.
          INC    B
          BTJZ   #020h,B,NOROLL4       ;Does RXPTR1 need to be rolled over?
          MOV    #O,B                  ;Reset RXPTRI to beginning of BUFFER.
```


PETITIONER ECOBEE
EX. 1010

```
NOROLL4   MOV    B,RXPTRI            ;Save new value of RXPTRI.
          MOV    A,*RXBUFFER[B]
          INC    RXDIFF              ;# of stored characters + 1.

          POP    B                   ;Restore B register contents.

          JBIT1  LOCSTAT,RXDONE      ;XOFF already sent? Don't send another.
          CXP    #RXLIMIT,RXDIFF     ;Receiver buffer getting full?
          JL     RXDONE              ;No, exit interrupt routine.
RXWAIT    BTJZ   #080h,TXCTL,RXWAIT  ;Wait until present transmission
                                     ;complete.
          Mov    #XOFF,TXBUF         ;Put XOFF in transmitter buffer.
          SBIT1  LOCSTAT             ;I have sent an XOFF.

RXDONE    POP    A                   ;Restore A register contents.
          RTI                        ;End of receiver interrupt routine.

;         Setup interrupt vectors addresses.

          .Sect  "VECTORS",07FF0h
          .word  TXINT               ;SCITX interrupt routine.
          .word  RXINT               ;SCIRX interrupt routine.
          .word  START               ;All other vectors will jump to 'START'.
          .word  START
          .word  START
          .word  START
          .word  START
          .word  START
```


PETITIONER ECOBEE
EX. 1010

There are a few things that should be noted about any terminal controller code. The most important is to watch the timing of the transmission of X-Off and X-On characters from the receiver routines. It is important that as soon as the receiver buffer passes its limit (in this case 27 characters) that an X-Off be transmitted to make sure that the buffer does not overflow. A problem arises in that the routine to transmit the X-Off character should be placed inside the RXINT routine so that it can be called immediately. Unfortunately, you have to wait to make sure that the current transmission is finished before starting the X-Off transmission. With all this waiting and transmitting inside the RXINT routine, it is possible at high SCI speeds that the routine will not be able to finish the current receiver interrupt and get the next character out of RXBUF before it is overwritten.

There is no simple way around this problem. One suggestion is to find the maximum time it takes for the interrupt routine with the X-Off transmission and tailor your SCI speed accordingly. If the receiver buffer size is greatly increased, it may be possible to wait for the next transmitter interrupt to send the X-Off. You may also want to poll the receiver overrun flag and transmit a special NAK (negative acknowledge) character to the terminal to have it retransmit the data. The exact solution for your particular case depends on your application.

PETITIONER ECOBEE
EX. 1010

Low Power Remote Data Acquisition

Use TMS370CO50 in STANDBY Mode with SCIRX Wake-Up Procedure

The low-power modes and flexible serial interface of the TMS370 family make it ideal for applications involving remote sensing. In this application example, a TMS370C050 is acting as a climate recorder in a remote location. Data from measuring instruments is collected via the on-board A/D and stored until requested by the host controller. Power consumption is a major concern because the system is designed to be battery-operated and serviced infrequently. A basic configuration is shown below in Figure 15. The TMS370C050 is connected through the A/D port to a variety of analog sensing devices. The transmit and receive lines are buffered through external logic to whatever levels are necessary to communicate with the host controller. The communications link may be as simple as a direct wire connection or as complicated as a modem interface.

Figure 15. Remote Data Acquisition Example

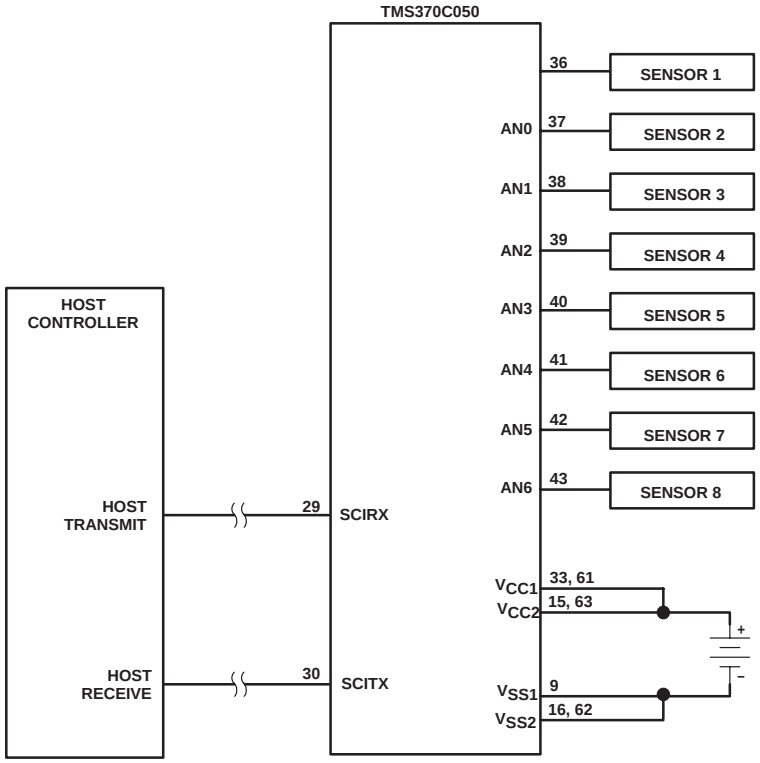

PETITIONER ECOBEE
EX. 1010

The program uses T1 to periodically read the A/D values and store them in ATABLE. T1 can also bring the device out of STANDBY mode through the T1 interrupt. In this way, the device will draw less than one-quarter its normal operating current most of the time. The A/D conversion routine is not shown here, but examples can be found in the *TMS370 Family User's Guide* and related application notes. In particular, the A/D routine is similar to the one shown in the Design Aids section of the *TMS370 Family User's Guide*. The data can be stored in RAM, or if power loss is a consideration, EEPROM memory may be used.

Because of the minimum speed of the part and the size of the timer registers, the longest timer period we can have is 33.6 seconds. For this example, the time between updates is 10 minutes. To allow for the extra time, a counter is included in the timer interrupt routine. If a full 10 minutes have not passed, the part goes back into STANDBY mode to wait for the next interrupt. The equation used to calculate the timer and counter values is:

$$\text{Time between updates} = \frac{\text{PRESCALE}}{\text{SYSCLK}} \times \text{T1 value} \times \text{interval counter}$$

For this example:

$$10 \text{ min} = 600 \text{ sec} = \frac{256}{0.5 \text{ MHz}} \times 65104 \times 18$$

The device will periodically update ATABLE, where the data is stored. Upon receipt of information from the host (SCIRXD goes low), the remote THS037C050 will come out of STANDBY mode. If the received data does not match the internal address, the part goes back into STANDBY mode. If the address matches, the remote will first send one byte of information with the number of bytes of data to be sent, followed by the data itself. After the device sends all the data, it will put itself back into STANDBY mode to wait for another inquiry or data acquisition.

Routine

```
          .title  "Remote Data Acquisition program"

;         This routine uses T1 and SCI receiver interrupts to bring a
;         THS0370C050 out of STANDBY mode. The T1 interrupt is used to
;         collect data from the A/D converter.

;         Set up EQUATE table for peripheral file registers used in the
;         program.

SCCR2     .equ   P012                ;System configuration register
                                     ;assignments.

SCICCR    .equ   P050                ;SCI configuration control register
SCICTL    .equ   P051                ;SCI operation control register
BAUDMSB   .equ   P052                ;Baud rate select MSB register
BAUDLSB   .equ   P053                ;Baud rate select LSB register
```


PETITIONER ECOBEE
EX. 1010

```
TXCTL     .equ   P054                ;Transmitter int. control/status
                                     ;register
RXCTL     .equ   P055                ;Receiver int. control/status register
RXBUF     .equ   P057                ;Receiver data buffer register
TXBUF     .equ   P059                ;Transmit data buffer register
SCIPC1    .equ   P05D                ;SCI port control register 1
SCIPC2    .equ   P05E                ;SCI port control register 2
SCIPRI    .equ   P05F                ;SCI priority control register
T1CNTRMSB .equ   P040                ;T1 register assignments
T1CXSBLSB .equ   P041
T1CMSB    .equ   P042
T1CLSB    .equ   P043
T1CCMSB   .equ   P044
T1CCLSB   .equ   P045
T1CTL1    .equ   P049
T1CTL2    .equ   P04A
T1CTL3    .equ   P04B
T1CTL4    .equ   P04C
T1PC1     .equ   P04D
T1PC2     .equ   P04E
T1PRI     .equ   P04E

;      Allocate register space for variables and data table used in the
;      routine.

ADDRESS   .equ   R2                  ;Temp register for received value.
ICOUNT    .equ   R3                  ;Counter for number of T1 interrupts
                                     ;before data is sampled for table.
ATABLE    .equ   R4                  ;Table where A/D data is stored before
                                     ;being transmitted.

;         Define constants used in program.

TIMEMSB   .equ   0FEh                ;Interrupt timing
TIMELSB   .equ   050h
INTERVAL  .equ   18                  ;Number of timer interrupts before data
                                     ;is stored
MYADDRESS .equ   0FFh                ;Personal address of this device

          .text  07000h
```


PETITIONER ECOBEE
EX. 1010

```
START     DINT                      ;Disable interrupts while initializing.

;         System Initialization

          MOV    #041h,SCCR2        ;STANDBY mode, no priv mode, no osc
                                    ;fault reset

;         SCI Initialization

          MOV    #000h,SCICTL       ;SCI SW RESET
          MOV    #077h,SCICCR       ;1 stop bit, even parity, asynchronous,
                                    ;idle line protocol, 8-bit characters
          MOV    #000h,BAUDMSB      ;Set for 9600 baud @ 5 MHz.
          MOV    #00Fh,BAUDLSB      ;
          MOV    #001h,RXCTL        ;Enable SCIRX INT.
          MOV    #022h,SCIPC2       ;Set SCIRXD, SCITXD function.
          MOV    #070h,SCIPRI       ;SCIRX interrupt low priority
          MOV    #033h,SCICTL       ;Release SCI SW RESET.
                                    ;Internal clock, TXENA, RXENA

;         T1 Initialization

          MOV    #TIMEMSB,TlCMSB    ;Set timer values.
          MOV    #TIMELSB,TlCLSB
          MOV    #040h,T1PRI        ;Set T1 interrupts to low priority.
          MOV    #010h,T1CTL4       ;Dual compare, disable interrupts.
          MOV    #007h,T1CTL1       ;System clock / 256
          MOV    #001h,T1CTL3       ;Disable T1 interrupts, clear flags.
          MOV    #001h,T1CTL2       ;Disable overflow interrupts,reset Tl.

          MOV    #INTERVAL,ICOUNT   ;Initialize counter.
          Mov    #200,B             ;Initalize the stack pointer to start at
          LDSP                      ;register 200 (away from ATABLE).
          MOV    #000h,B            ;Reset ATABLE pointer.
          EINT                      ;Interrupts must be enabled to exit
                                    ;STANDBY mode.

;         Main part of program actually does nothing but wait for interrupts.
;         The T1 and SCIRX interrupt service routines actually do the work.

MAIN      IDLE                      ;Go into low-power mode.
```


PETITIONER ECOBEE
EX. 1010

```
          JMP    MAIN                ;Main loop

;         Tl Interrupt Routine
;         When the interrupt routine is called, the part will come out of
;         STANDBY mode.  The routine will collect information from the A/D
;         and store it in register A. The data is then loaded into ATABLE so
;         it can be easily transmitted out. The number of bytes of stored
;         data is in B.  At the end of the routine, the part will return to
;         the main program where it will go into STANDBY mode again.

TIMERINT  AND    #00Fh,T1CTL3        ;Clear interrupt flags.
          DJNZ   ICOUNT,DONE         ;Time to get new A/D value? If not,
                                     ;skip.

          ...                        ;A/D data gathering & formatting. Value
                                     ;is stored in register A.
          INC    B                   ;Increment data counter/pointer.
          MOV    A,*ATABLE–1[B]      ;Store data in ATABLE.
          MOV    #INTERVAL,ICOUNT    ;Restore counter.
DONE      RTI                        ;End of service routine

;         SCI Receiver Interrupt Routine
;         This routine is called when the part receives a low pulse on the
;         SCIRX pin. The received datum is compared against an internal
;         address to see if the device was addressed. If so, the routine
;         transmits one character indicting the number of bytes to be
;         transmitted. The routine then transmits all the data stored in
;         ATABLE, LIFO.

RXINT     MOV    RXBUF,ADDRESS       ;Read received address.
          BTJ0   #080h,RXCTL,RXDONE  ;If there was an error, wait for another
                                     ;transmission.
          CMP    #MYADDRESS,ADDRESS  ;If address not mine, ignore wake-up
                                     ;call.
          JNE    RXDONE              ;
          MOV    B,TXBUF             ;# of characters to be transmitted
          CMP    #00,B               ;If no data stored yet, ignore.
          JEQ    WAIT
LOOP      BTJZ   #080h,TXCTL,LOOP    ;Wait until character sent.
          MOV    *ATABLE[B]–1,A      ;Transmit character.
```


PETITIONER ECOBEE
EX. 1010

```
          MOV    A,TXBUF             ;
          DJNZ   B,LOOP              ;If not done, send next character.
WAIT      BTJZ   #040h,TXCTL,WAIT    ;Wait for last character to be sent.
RXDONE    RTI                        ;Exit interrupt routine and go back into
                                     ;STANDBY mode.

;  Set up interrupt vectors.

          .sect  "VECTORS",07FF2h
          .word  RXINT               ;SCIRX interrupt routine.
          .word  TIMERINT            ;T1 interrupt routine.
          .word  START               ;All other vectors will jump to 'START'.
          .word  START
          .word  START
          .word  START
          .word  START
```


PETITIONER ECOBEE
EX. 1010

Appendix A: SPI Control Registers

The SPI is controlled and accessed through registers in the peripheral file. These registers are listed in Table 6 and described in the *TMS370 Family User's Guide*. The bits shown in shaded boxes in Table 6 are privilege mode bits; that is, they can only be written to in the privilege mode.

Table 6. SPI Control Registers

Designa-tion	ADDR	PF	Bit 7	Bit 6	Bit 5	Bit 4	Bit 3	Bit 2	Bit 1	Bit 0
SPICCR	1030h	P030	SPI SW RESET	CLOCK POLARITY	SPI BIT RATE2	SPI BIT RATE1	SPI BIT RATE0	SPI CHAR2	SPI CHAR1	SPI CHAR0
SPICTL	1031h	P031	RECEIVER OVERRUN	SPI INT FLAG	—	—	—	MASTER/ SLAVE	TALK	SPI INT ENA
	1032h to 1036h	P032 to P036	Reserved							
SPIBUF	1037h	P037	RCVD7	RCVD6	RCVD5	RCVD4	RCVD3	RCVD2	RCVD1	RCVD0
	1038h	P038	Reserved							
SPIDAT	1039h	P039	SDAT7	SDAT6	SDAT5	SDAT4	SDAT3	SDAT2	SDAT1	SDAT0
	103Ah to 103Ch	P03A to P03C	Reserved							
SPIPC1	103Dh	P03D	—	—	—	—	SPICLK DATA IN	SPICLK DATA OUT	SPICLK FUNCTION	SPICLK DATA DIR
SPIPC2	103Eh	P03E	SPISIMO DATA IN	SPISIMO DATA OUT	SPISIMO FUNCTION	SPISIMO DATA DIR	SPISOMI DATA IN	SPISOMI DATA OUT	SPISOMI FUNCTION	SPISOMI DATA DIR
SPIPRI	103Fh	P03F	SPI STEST	SPI PRIORITY	SPI ESPEN	—	—	—	—	—

PETITIONER ECOBEE
EX. 1010

Appendix B: SCI Control Registers

The SCI is controlled and accessed through registers in the peripheral file. These registers are listed in Table 7 and described in the *TMS370 Family User's Guide*. The bits shown in shaded boxes in Table 7 are privilege mode bits; that is, they can only be written to in the privilege mode.

Table 7. SCI1 and SCI2 Control Registers

SCI1

Designation	ADDR	PF	*Bit 7*	*Bit 6*	*Bit 5*	*Bit 4*	*Bit 3*	*Bit 2*	*Bit 1*	*Bit 0*
SCICCR	1050h	P050	STOP BITS	EVEN/ODD PARITY	PARITY ENABLE	ASYNC/ ISOSYNC	ADDRESS/ IDLE WUP	SCI CHAR2	SCI CHAR1	SCI CHAR0
SCICTL	1051h	P051	—	—	SCI SW RESET	CLOCK	TXWAKE	SLEEP	TXENA	RXENA
BAUD MSB	1052h	P052	BAUDF (MSB)	BAUDE	BAUDD	BAUDC	BAUDB	BAUDA	BAUD9	BAUD8
BAUD LSB	1053h	P053	BAUD7	BAUD6	BAUD5	BAUD4	BAUD3	BAUD2	BAUD1	BAUD0 (LSB)
TXCTL	1054h	P054	TXRDY	TX EMPTY	—	—	—	—	—	SCI TX INT ENA
RXCTL	1055h	P055	RX ERROR	RXRDY	BRKDT	FE	OE	PE	RXWAKE	SCI RX INT ENA
	1056h	P056	Reserved							
RXBUF	1057h	P057	RXDT7	RXDT6	RXDT5	RXDT4	RXDT3	RXDT2	RXDT1	RXDT0
	1058h	P058	Reserved							
TXBUF	1059h	P059	TXDT7	TXDT6	TXDT5	TXDT4	TXDT3	TXDT2	TXDT1	TXDT0
	105Ah	P05A	Reserved							
	105Bh	P05B								
	105Ch	P05C								
SCIPC1	105Dh	P05D	—	—	—	—	SCICLK DATA IN	SCICLK DATA OUT	SCICLK FUNCTION	SCICLK DATA DIR
SCIPC2	105Eh	P05E	SCITXD DATA IN	SCITXD DATA OUT	SCITXD FUNCTION	SCITXD DATA DIR	SCIRXD DATA IN	SCIRXD DATA OUT	SCIRXD FUNCTION	SCIRXD DATA DIR
SCIPRI	105Fh	P05F	SCI STEST	SCITX PRIORITY	SCIRX PRIORITY	SCI ESPEN	—	—	—	—

PETITIONER ECOBEE
EX. 1010

SCI2

Designa-tion	ADDR	PF	*Bit 7*	*Bit 6*	*Bit 5*	*Bit 4*	*Bit 3*	*Bit 2*	*Bit 1*	*Bit 0*
SCICCR	1050h	P050	STOP BITS	EVEN/ODD PARITY	PARITY ENABLE	—	ADDRESS/ IDLE WUP	SCI CHAR2	SCI CHAR1	SCI CHAR0
SCICTL	1051h	P051	—	—	SCI SW RESET	—	TXWAKE	SLEEP	TXENA	RXENA
BAUD MSB	1052h	P052	BAUDF (MSB)	BAUDE	BAUDD	BAUDC	BAUDB	BAUDA	BAUD9	BAUD8
BAUD LSB	1053h	P053	BAUD7	BAUD6	BAUD5	BAUD4	BAUD3	BAUD2	BAUD1	BAUD0 (LSB)
TXCTL	1054h	P054	TXRDY	TX EMPTY	—	—	—	—	—	SCI TX INT ENA
RXCTL	1055h	P055	RX ERROR	RXRDY	BRKDT	FE	OE	PE	RXWAKE	SCI RX INT ENA
	1056h	P056	Reserved							
RXBUF	1057h	P057	RXDT7	RXDT6	RXDT5	RXDT4	RXDT3	RXDT2	RXDT1	RXDT0
	1058h	P058	Reserved							
TXBUF	1059h	P059	TXDT7	TXDT6	TXDT5	TXDT4	TXDT3	TXDT2	TXDT1	TXDT0
	105A h	P05A	Reserved							
	105B h	P05B								
	105C h	P05C								
	105D h	P05D								
SCIPC2	105E h	P05E	SCITXD DATA IN	SCITXD DATA OUT	SCITXD FUNCTION	SCITXD DATA DIR	SCIRXD DATA IN	SCIRXD DATA OUT	SCIRXD FUNCTION	SCIRXD DATA DIR
SCIPRI	105Fh	P05F	SCI STEST	SCITX PRIORITY	SCIRX PRIORITY	SCI ESPEN	—	—	—	—

PETITIONER ECOBEE
EX. 1010

Appendix C: TMS0170 Specifications

The TMS0170 Vacuum Fluorescent (VF) Display Driver is a one-chip interface between low voltage digital logic (5.0 V) and low voltage (< 18 V) VF displays.

Key Features

- 33 individually controllable VF drivers: 8 high current drivers and 25 low current drivers
- Blanking input allows duty cycling of outputs for brightness control.
- Serial interface minimizes connections between the TMS0170 and the digital system.
- Multiple TMS0170's can be cascaded using the data out latch.
- Self-load feature allows elimination of load enable line.
- Single supply, from 8 V to 18 V
- Fabricated with high voltage PMOS technology.
- 40 pin DIP and 44-pin PLCC plastic packages are available.

Functional Description

Architecture

The TMS0170, shown in Figure 16 as a block diagram, consists of a 34-bit data shift register, a 33-bit data latch, and 33 VF drivers. A bit pattern is shifted into the TMS0170 using the clock input, then transferred to the data latch using the load enable input. The blanking input can be used to turn off all of the drivers at any time. By duty cycling the blanking input, the brightness of the display can be varied.

Figure 16. TMS0170 Block Diagram

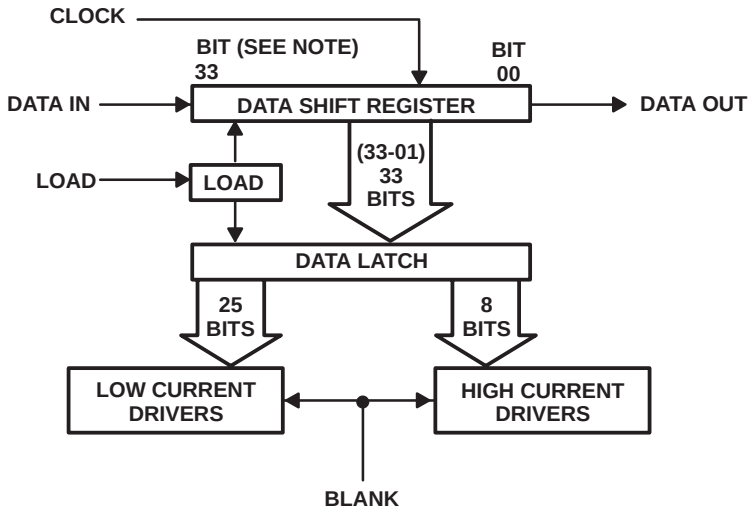

*Note: Bit 33 is the last bit shifted into DATA IN pin.

PETITIONER ECOBEE
EX. 1010

Shift Register

The 34-bit shift register consists of 34 D-type flip-flops. The bits are numbered from 33 down to 00. Each data bit is clocked in on the rising edge of the clock pin, and enters the shift register in flip-flop #33. Upon each successive clock rising edge, the bit is shifted sequentially through the shift register, from flip-flop #33 to flip-flop #00. The data in the first 33 flip-flops (from #33 down to #01) is transferred into the data latch on the rising edge of load enable. Flip-flop #00 is not connected to the data latch, but instead, is connected to the Data Out output pin. This output can be used for cascading several TMS0170s together or for self loading. All of the flip-flops in the shift register are cleared by the rising edge of load enable.

Interface

The interface between the TMS0170 and the digital logic consists of four lines; a clock in line, a data in line, and a load enable line, and a Blank input.

- Data Input: Determines what data value is loaded into the data shift register. This data can then be latched to the output drivers upon a valid load enable input. A latched high level will turn the output driver on. A latched low level will turn the output driver off.
- Clock: The rising edge of the clock input will latch the current value of the data input into the data shift register and cause the shift register to shift by one.
- Load Enable: The rising edge of the load enable input transfers the data from the data shift register into the data latches and sets the data shift register to zero.
- Blank: This input is used to disable all the drivers. A low level on this pin will force all driver outputs to a low level. A high level will enable the drivers to output whatever data has been loaded into their respective latches. This pin has an internal pull-up resistor.

PETITIONER ECOBEE
EX. 1010

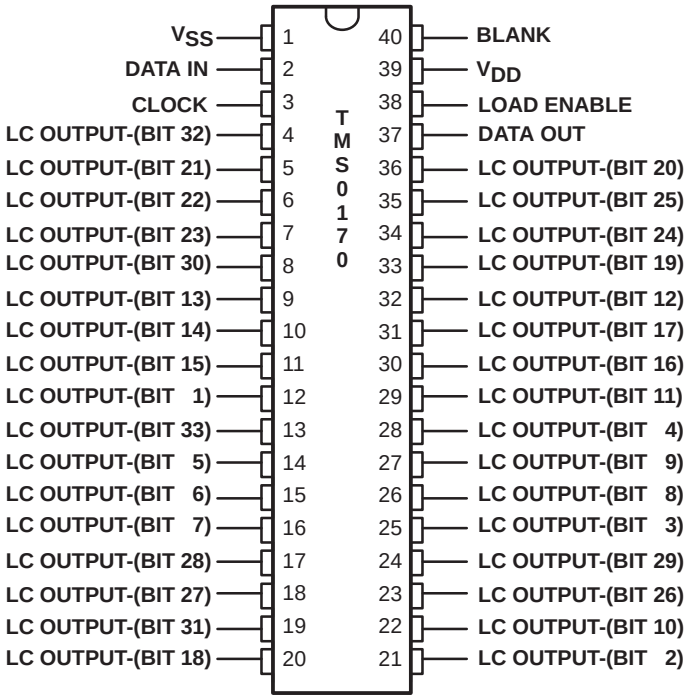

Figure 17. TMS0170 DIP Pin Out

PETITIONER ECOBEE
EX. 1010

Electrical Specifications

Table 8. Recommended Operating Conditions

Parameter		Min	Max	Units
V_{SS}	Supply Voltage	8	18	V
V_{IH} V_{IL}	High Level Input Voltage Low Level Input Voltage	V_{DD} + 3.5 V_{DD} - 0.3	V_{SS} + 0.3 V_{DD} + 0.8	V V
T_a	Operating Free-Air Temperature	-40	85	*C

Table 9. Electrical Characteristics Over Operating Free Air Temperature Range

Parameter		Min	Max	Units
I_{SS}	Supply Current (all outputs open) V_{SS} = 8 V to 18 V		17	mA
V_{OH}	High Level Output Voltage (low current drivers) V_{SS} = 9.5 V I_{OH} = 1.5 mA	V_{SS} - 0.3		V
V_{OH}	High Level Output Voltage (high current drivers) V_{SS} = 9.5 V I_{OH} = 30.0 mA	V_{SS} - 2.5		V
V_{OH}	High Level Output Voltage (DATA OUT output) V_{SS} = 9.5 V I_{OH} = 500 µA	V_{SS} - 5.0		V
V_{OL}	Low Level Output Voltage (DATA OUT output) V_{SS} = 9.5 V I_{OL} = 1 µA V_{SS} = 9.5 V I_{OL} = 500 µA		 V_{DD} + 0.4 V_{DD} + 5.0	 V V
V_{OL}	Low Level Output Voltage (DATA OUT output) V_{SS} = 9.5 V I_{OL} = 1µA		V_{DD} + 0.4	V
I_{IH}	High Level Input Current (CLOCK DATA LOAD) V_{IH} = V_{SS}		1	µA
I_{IL}	Low Level Input Current (CLOCK DATA LOAD) V_{IL} = V_{DD}		1	µA
I_{IH}	High Level Input Current (BLANK) V_{IH} = 3.5 V	-5	-125	µA
I_{IL}	Low Level Input Current (BLANK) V_{IL} = V_{DD}	-5	-125	µA

PETITIONER ECOBEE
EX. 1010

Glossary

address bit mode: An SCI mode of communication incorporating an extra bit into each frame to distinguish address frames from data frames. Setting the address bit to a logic 1 signifies a frame beginning a new block.

asynchronous mode: A communication format in which no synchronizing clocks are used. The data being transmitted is repeated several times and a majority vote is taken of selected bits to determine the transmitted value. This format is commonly used in RS-232-C and systems communications.

block: A collection of one or more frames, the first of which is an address frame.

baud rate: The communication rate for digital transfers, measured in line changes per second. For serial communications, this equals one bit per second.

character: A group of bits, from one to eight bits in length, that makes up one unit of data.

DCE (data communications equipment): The hardware responsible for controlling digital communications.

DTE (data terminal equipment): Equipment which receives or originates data transfer in a communications network.

double-buffered: Using a temporary storage register to hold data between register reads or writes. In the SCI, the temporary registers are TXBUF and RXBUF. They are used to hold data while transmitting or receiving and TXSHF or RXSHF are being used, speeding up data transfer and reducing the possibility of transmitter or receiver overruns.

frame: The basic packet of serial communication. It typically contains one start bit, one to eight bits of data, and one or two stop bits. It may also contain a parity bit and an address designator bit depending on the protocol.

full-duplex: A mode of communication in which transmission and reception of signals happens simultaneously.

idle line mode: A serial communications protocol in which the beginning of a new block (an address frame) is identified as being the first frame after an idle period.

idle period: A period of ten bits or longer in which no data is received.

isosynchronous mode: A communication format in which synchronizing clocks are used. This is typically faster than asynchronous communications because one bit of data is transmitted on each shift-clock cycle.

LSb: Least significant bit.

LSB: Least significant byte.

master: In its most general meaning, a mode of operation in which a microcontroller controls another microcontroller or peripheral and issues timing signals to it. It also refers to a specific mode of operation of the SPI.

MSb: Most significant bit.

MSB: Most significant byte.

PETITIONER ECOBEE
EX. 1010

NRZ (non return to zero) format: A communication format in which the inactive state is a logic one.

RS-232-C: An industry standard serial communications interface. The most commonly used serial interface for personal computers.

parity: An error checking protocol based on the assumption that the number of 1s in a character of data is odd or even. Usually one bit is reserved in each frame to make sure that it plus the number of bits in the actual data is an odd or even number, depending on whether odd or even parity is used.

protocol: The rules of communication and data format in a communications link between two devices.

shift-clock cycle: One cycle of the SCI clock that gates one bit of data. For isosynchronous communications, one shift-clock cycle gates one bit of data or format information. In the asynchronous mode, 16 shift-clock cycles are needed per bit of information.

slave: A mode of operation in which a microcontroller is controlled by and receives synchronizing signals from another microprocessor.

UART: Universal Asynchronous Receiver/Transmitter; an interface designed to receive and transmit asynchronous signals for a serial device.

PETITIONER ECOBEE
EX. 1010

References

Friend, G. E., Fike, J. L., Baker, H. C., Bellamy, J.C., *Understanding Data Communications*, Texas Instruments Information Publishing Center, 1984.

Schwartz, Mischa. *Information, Transmission, Modulation, and Noise*. McGraw-Hill Book Company, 1980.

T. I. Microcontroller Applications Group. *TMS370 Family User's Guide*, Texas Instruments Technical Publishing. 1996.

T. I. Digital Signal Processing Applications Group. *TMS320C25 User's Guide*, Texas Instruments Technical Publishing, 1986.

PETITIONER ECOBEE
EX. 1010

PETITIONER ECOBEE
EX. 1010

Fast Method to Determine Parity With the TMS370

Microcontroller Products — Semiconductor Group
Texas Instruments

PETITIONER ECOBEE
EX. 1010

PETITIONER ECOBEE
EX. 1010

Fast Method to Determine Parity

This routine presents a quick way to determine the parity of a byte. Exclusive ORing all the bits of the byte together derives a single bit that is the even parity of the word. With exclusive ORing, an even number of 1s combines to form a 0, leaving either an odd 1 or 0 bit. This routine keeps splitting the byte in half and exclusive ORing the two halves. Table 1 shows register and function values for the routine.

Table 1. Register Values and Functions

Register	Before	After	Function
A	TARGET	??	Passing byte from program
B	XX	??	
CARRY	XX	Parity	Status bit, result to calling routine

Routine

```
*********************************************************************
*        STEP 1                                    SUBROUTINE
*        Byte bits    7654 3210                    TO FIND
*                 XOR      7654 [MSB above]        EVEN PARITY
*                   ===========
*                     xxxx ABCD
*        STEP 2                 ----->   AB CD
*                                     XOR    AB [MS bits above]
*                                       =======
*                                          xx ab
*        STEP 3                                --->   a b
*                                                XOR   a [MS bit]
*                                                  =====
*                                                  x P   {answer}
*
********************************************************************
       .TEXT  7000h  ;Absolute start address
PARITY MOV    A,B    ;Duplicate the target byte
       SWAP   A      ;Line up the ms nibble with the ls
                     ;nibble
       XOR    B,A    ;Exclusive OR the nibbles to get a
                     ;nibble answer
       MOV    A,B    ;Duplicate the nibble answer
       RR     A      ;Line up bits 0,1 of the answers to
                     ;bits
       RR     A      ;2, 3 of the answer
       XOR    B,A    ;XOR to get a new 2-bit answer
       MOV    A,B    ;Duplicate this 2 bit answer
       RR     A      ;Line up bit 0 with bit 1
       XOR    B,A    ;XOR for final even parity answer
       RR     A      ;Rotate answer into the carry bit and bit 7
       RTS           ;Carry = 0 = even # of 1's
                     ;Carry = 1 = odd # of 1's
                     ;Use JC, JN, or JNC  in next
                     ;executed instruction
```


PETITIONER ECOBEE
EX. 1010

PETITIONER ECOBEE
EX. 1010

Automatic Baud Rate Calculation With the TMS370

Microcontroller Products—Semiconductor Group
Texas Instruments

PETITIONER ECOBEE
EX. 1010

PETITIONER ECOBEE
EX. 1010

SCI Port Interfacing

The SCI port provides communication with a variety of peripheral devices in either asynchronous or isosynchronous mode. The format parameters of the SCI are programmable:

Table 1. Format Parameters

Parameter	Options
Mode	Asynchronous, isosynchronous
Bit rate (baud)	64K possible bit rates
Character length	1 to 8 bits
Parity	Even, odd, off
Number of stop bits	1 or 2
Interrupt priorities	Receiver/transmitter

The SCI port is configured for an RS-232-C type interface in Figure 1. Since the TMS370 family uses TTL-level I/O, the transmit and receive data signals must be converted to RS-232 levels; the 75,188 and 75189 devices provide this function. In the asynchronous mode, the clock signal does not need to be transmitted but is generated locally at both ends.

Figure 1. SCI/RS-232 Interface Example

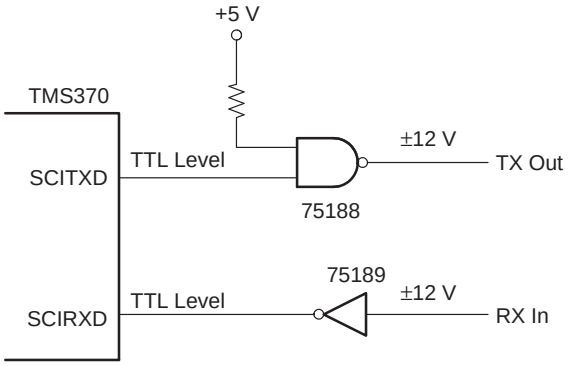

SCI Control Registers

The SCI is controlled and accessed through registers listed in the table below and described in the following subsections. The bits shown in shaded boxes in the table are privilege mode bits; that is, they can only be written to in the privilege mode. The SCI1 control registers are listed here, for the SCI2 control registers see Appendix B in *Using the SCI/SPI Modules* located in this application book.

PETITIONER ECOBEE
EX. 1010

Table 2. SCI1 Control Registers

Designation	ADDR	PF	*Bit 7*	*Bit 6*	*Bit 5*	*Bit 4*	*Bit 3*	*Bit 2*	*Bit 1*	*Bit 0*
SCICCR	1050h	P050	STOP BITS	EVEN/ODD PARITY	PARITY ENABLE	ASYNC/ ISOSYNC	ADDRESS/ IDLE WUP	SCI CHAR2	SCI CHAR1	SCI CHAR0
SCICTL	1051h	P051	—	—	SCI SW RESET	CLOCK	TXWAKE	SLEEP	TXENA	RXENA
BAUD MSB	1052h	P052	BAUDF (MSB)	BAUDE	BAUDD	BAUDC	BAUDB	BAUDA	BAUD9	BAUD8
BAUD LSB	1053h	P053	BAUD7	BAUD6	BAUD5	BAUD4	BAUD3	BAUD2	BAUD1	BAUD0 (LSB)
TXCTL	1054h	P054	TXRDY	TX EMPTY	—	—	—	—	—	SCI TX INT ENA
RXCTL	1055h	P055	RX ERROR	RXRDY	BRKDT	FE	OE	PE	RXWAKE	SCI RX INT ENA
	1056h	P056	Reserved							
RXBUF	1057h	P057	RXDT7	RXDT6	RXDT5	RXDT4	RXDT3	RXDT2	RXDT1	RXDT0
	1058h	P058	Reserved							
TXBUF	1059h	P059	TXDT7	TXDT6	TXDT5	TXDT4	TXDT3	TXDT2	TXDT1	TXDT0
	105Ah	P05A	Reserved							
	105Bh	P05B								
	105Ch	P05C								
SCIPC1	105Dh	P05D	—	—	—	—	SCICLK DATA IN	SCICLK DATA OUT	SCICLK FUNCTION	SCICLK DATA DIR
SCIPC2	105Eh	P05E	SCITXD DATA IN	SCITXD DATA OUT	SCITXD FUNCTION	SCITXD DATA DIR	SCIRXD DATA IN	SCIRXD DATA OUT	SCIRXD FUNCTION	SCIRXD DATA DIR
SCIPRI	105Fh	P05F	SCI STEST	SCITX PRIORITY	SCIRX PRIORITY	SCI ESPEN	—	—	—	—

Automatic Baud Rate Calculation

The automatic baud rate routine automatically calculates the baud for the SCI port by timing the length of the start bit. This eliminates the need for external select switches, which can cause confusion.

The routine converts the SCIRXD pin to a general-purpose input pin and then samples this pin until it finds the start bit. Sampling is controlled by the baud counter, which takes 32 cycles for one complete count. At each count or every 32 cycles, the input pin is sampled. When the start bit is received, its low state is sampled until the high state of the first data bit (of an odd ASCII value) is detected. The baud register figures the bit rate according to the number of times the start bit is sampled. Refer to Figure 3 as you examine the routine.

Automatic Baud Rate Routine

NOTE:
This routine is written for the SCI1 Module. Minor modifications may be necessary when using the SCI2 Module.

```
SCICCR      .EQU    P050        ;SCI communication control register
SCICTL      .EQU    P051        ;SCI control register
BAUDMSB     .EQU    P052        ;Baud counter MSB
```


PETITIONER ECOBEE
EX. 1010

```
            BAUDLSB     .EQU    P053        ;Baud counter LSB
            TXCTL       .EQU    P054        ;Transmitter control
            RXCTL       .EQU    P055        ;Receiver control
            RXBUF       .EQU    P057        ;Receiver buffer
            TXBUF       .EQU    P059        ;Transmitter buffer
            SCIPC1      .EQU    P05D        ;Port control 1 (SCLK)
            SCIPC2      .EQU    P05E        ;Port control 2 (TXD,RXD)
            SCIPRI      .EQU    P05F        ;Priority register
            COUNT       .EQU    R04         ;Temporary counting register
            .TEXT       07000h              ;Initialize SCI port with a;<CR> (return)
                                            ;Baud automatically set on odd
                                            ;ASCII character
AUTOBAUD    CLR         COUNT               ;Clear count register
            CLR         COUNT-1             ;COUNT–1
            MOV         #0,SCIPC2           ;Set RXD to general-purpose input pin
WAITSTRT    BTJO        #8,SCIPC2,WAITSTRT ;Wait for a start bit to go low
WAITBIT     INC         A               ;Dummy, gives 32 clock states
                                            ;(1 min baud)
            INCW        #1, COUNT           ;Increment counter
            BTJZ        #8,SCIPC2,WAITBIT   ;Wait until start bit ends
                                            ;(ASCII char=odd)
SETUP       INCW        #–1,COUNT           ;One less than count into baud reg
            MOV         COUNT,BAUDLSB       ;since the SCI starts from count 0
            MOV         COUNT–1,BAUDMSB     ;Initialize baud registers
            MOV         #22h,SCIPC2         ;Enable RX and TX pins
            MOV         #2,SCIPC1           ;Enable SCLK pin (if needed)
            MOV         #01110111b,SCICCR   ;8-bit length, even parity, 1 stop bit
                                            ;only even, odd, or no parity
                                            ;determined by SCICCR value
            MOV         #00110011b,SCICTL   ;Enable TX, RX, SCLK = internal
                                            ;program after input character finishes
            MOV         #1,TXCTL            ;Enable TX interrupts
            MOV         #1,RXCTL            ;Enable RX interrupts
            MOV         TXBUF,A             ;Clear out garbage from SCI (Place in
                                            ;program after input character finishes)
            EINT
```


PETITIONER ECOBEE
EX. 1010

Figure 2. Autobaud Waveform

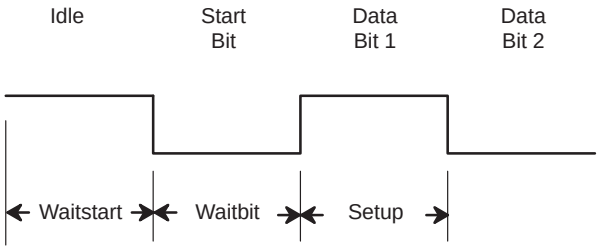

Possible Improvements

To increase flexibility and accuracy, you can improve the routine by using some of the following suggestions:

- For greater accuracy, time more than one bit and then divide by the number of bits. To do this, you must choose carefully the character to start the automatic baud routine. The current routine can use 50% of the ASCII values (all odd ASCII values).
- Add a routine to check the parity of the incoming character and set the parity of the SCI port accordingly. Again, this means a limited number of characters will correctly autobaud the routine.
- As an accuracy check, add routines to compare the count of another bit in the character to the start bit count. Again, you must choose the correct character to start the automatic baud rate routine.

For a more in-depth discussion of the uses of the TMS370 SCI1 or SCI2, refer to *Using the TMS370 SPI and SCI Modules Application Report* located in this book.

PETITIONER ECOBEE
EX. 1010

Part III
Module Specific Application Design Aids

Part III contains six sections:

RESET Operations 99

SPI and SCI Modules 105

Timer and Watchdog Modules 199

Analog to Digital Modules 309

PACT Module 375

I/O Pins 439

PETITIONER ECOBEE
EX. 1010

PETITIONER ECOBEE
EX. 1010

Using the TMS370 Timer Modules

Microcontroller Products—Semiconductor Group
Texas Instruments

PETITIONER ECOBEE
EX. 1010

PETITIONER ECOBEE
EX. 1010

Introduction

The TMS370 family of 8-bit microcontrollers presently provides up to three timer modules designed to meet user demands for timer applications.

This application report provides examples of software routines and hardware interface circuits designed to illustrate how the features of the timer modules may be used to solve a variety of system timer requirements. These concepts may be adapted and applied to fit the specific needs of your individual project. Additional information for T1 and T2n may be found in the *TMS370 Family User's Guide*, Sections 7 and 8.

Table 1. TMS370 Family Timer Module Capabilities

System Requirements	Timer Resources
Real-Time System Control	Interval Timers with Interrupts
Input Pulse Width Measurement	Pulse Accumulate or Input Capture Functions
External Event Synchronization	Event Count Function
Timer Output Control	Compare Function
Pulse-Width Modulated Output Control	PWM Output Function
System Integrity	Watchdog (WD) Function

PETITIONER ECOBEE
EX. 1010

Module Description

Timer 1 (T1)

The T1 module is available on most TMS370 devices, and contains three major blocks as shown in Figure 1: an 8-bit prescaler/clock source block, a 16-bit general-purpose timer (T1), and a 16-bit watchdog timer (WD). Additional functions of the T1 module not illustrated in Figure 1 include the interrupts and l/O pins.

Figure 1. Timer Block Diagram

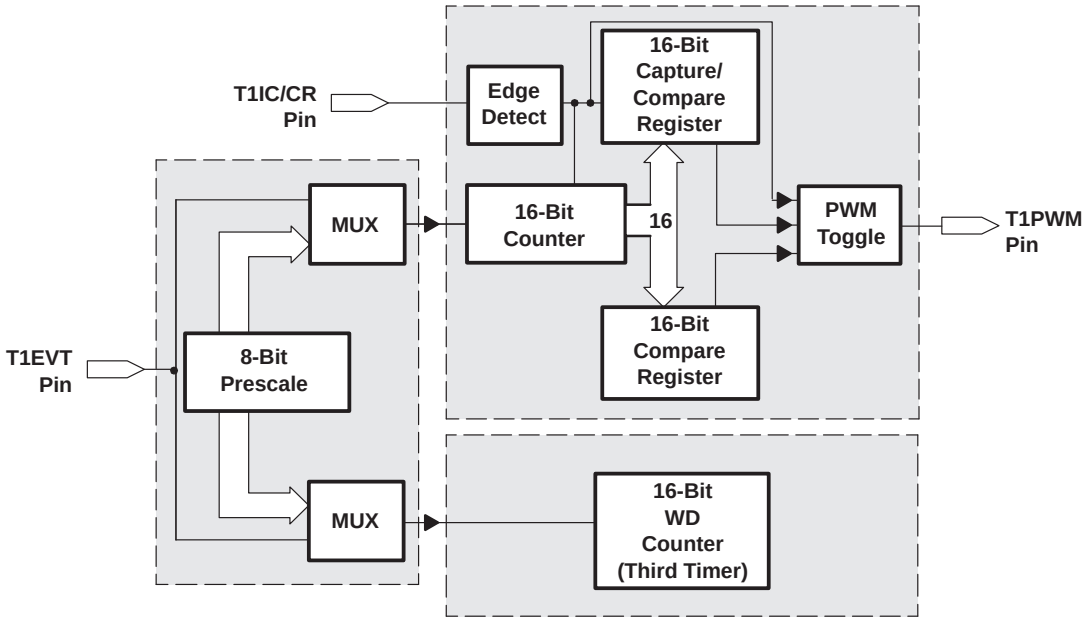

PETITIONER ECOBEE
EX. 1010

Prescaler / Clock Source

The prescaler/clock source block provides eight available clock sources for the general-purpose timer (T1) and the WD. (See Figure 2.)

These clock sources are:

- System clock
- Pulse accumulation
- Event input
- System clock with /4 prescale tap
- System clock with /16 prescale tap
- System clock with /64 prescale tap
- System clock off (timer not running)

The clock sources may be independently selected for T1 and the WD. For example, you could select the event input clock source for T1 while the WD uses the system clock with /64 prescale tap.

Figure 2. T1 Prescaler / Clock Source

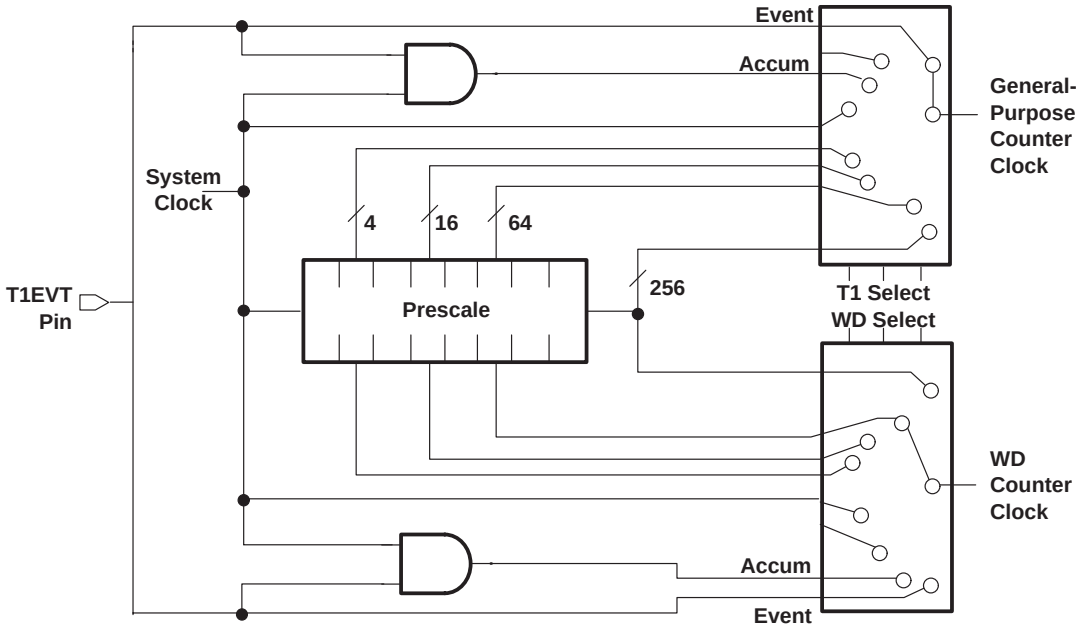

PETITIONER ECOBEE
EX. 1010

T1 Counter

The T1 block (Figure 3) contains a 16-bit counter, a 16-bit compare register, and a 16-bit capture/compare register. It provides input capture, output compare, and external event functions. T1 can be operated in either the dual compare mode or the capture/compare mode, depending on the needs of your individual application.

The basic functions of the T1 block can be defined as follows:

- The input capture function is used to latch the present value of the 16-bit counter register into the 16-bit capture/compare register on the occurrence of a selected edge on the T1IC/CR pin. This function is available only when operating in the capture/compare mode.
- The output compare function is used to trigger an action, such as toggling the T1PWM pin, when the contents of a compare register equal the present value of the counter register.
- The external edge detection function is used to trigger an action such as loading the capture register, and occurs when an appropriate external edge is present on the T1IC/CR pin. This function can also toggle the T1PWM pin or reset the counter in the dual compare mode.

For additional information concerning modes of operation or functions of the T1 block, see Section 7.2 in the *TMS370 Family User's Guide*.

Figure 3. 16-Bit Programmable General-Purpose T1

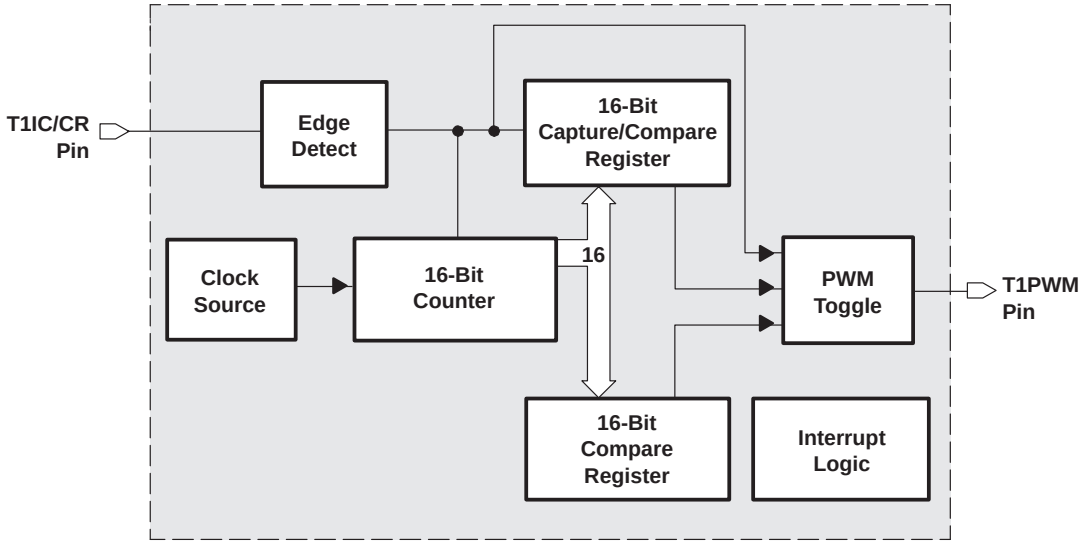

PETITIONER ECOBEE
EX. 1010

Standard Watchdog (WD)

The WD (Figure 4) is a separate 16-bit counter in the T1 module. The WD can be used to cause a system reset or can be software configured as a simple counter/timer, an event counter, or a pulse accumulator if the WD reset feature is not needed. The time-out duration for the WD depends on the clock source selected and can be programmed with an overflow resolution ranging from 15−24 bits.

NOTE:
The TMS370 Family contains3 different WD options: standard WD, hard WD, and simple counter. Additional information concerning the WD is available in Section 7.3 of the *TMS370 Family User's Guide.*

Figure 4. WD Counter

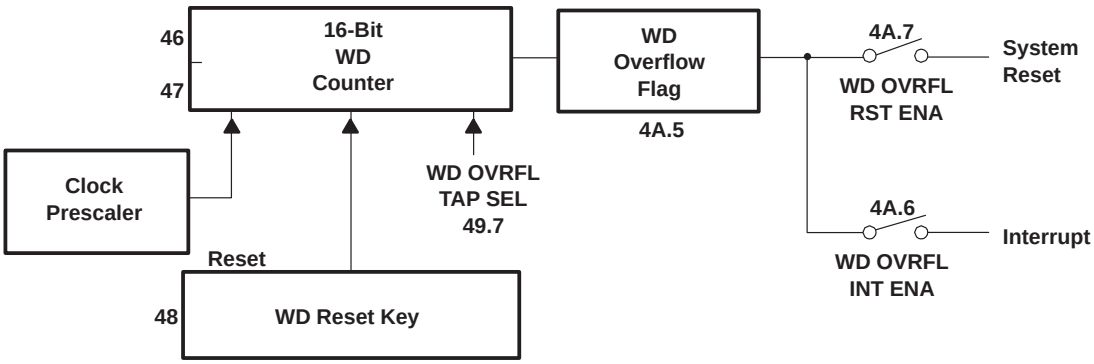

T1 Interrupts

The T1 module provides up to five different interrupt flags, depending on the mode of operation. The actions that trigger an interrupt are as follows:

- External edge detection/input capture: An active transition on the T1IC/CR pin will cause the T1EDGE INT FLAG bit (T1CTL3.7) to be set if the T1EDGE DET ENA bit (T1CTL4.0) is set. In the dual compare mode, this action can reset the T1 counter if the T1CR RST ENA bit (T1CTL4.1) is set, and also toggle the T1PWM pin if the T1CR OUT ENA bit (T1CTL4.3) is set.

  In the capture/compare mode, the T1EDGE INT FLAG bit (T1CTL3.7) is set if enabled, and the contents of the T1 counter is loaded into the capture/compare register if the T1EDGE DET ENA bit (T1CTL4.0) is enabled.

- Compare equals 1: When the value of the compare register matches the value of the T1 counter, the T1C1 INT FLAG bit (T1CTL3.5) is set during both modes of operation. This action also toggles the T1PWM pin if the T1C1 OUT ENA bit (T1CTL4.6) is enabled. The T1PWM toggle function is true only for the dual compare mode of operation.

PETITIONER ECOBEE
EX. 1010

- Compare equals 2: In the dual compare mode, the capture/compare register functions as an additional compare register, and when the value of the capture/compare register matches the value of the T1 counter, the T1C2 INT FLAG bit (T1CTL3.6) is set. This action also toggles the T1PWM pin if the T1C2 OUT ENA bit (T1CTL4.5) is enabled. Note that this function is only available in the dual compare mode of operation.
- Counter overflow: When the T1 counter overflows from 0FFFFh to 0000h, the T2n OVRFL INT FLAG bit (T1CTL2.3) is set.
- WD overflow: The WD has overflowed and the WD OVRFL FLAG bit (T1CTL2.5) is set. A system reset occurs if the WD OVRFL RST ENA bit (T1CTL2.7) is enabled. Also, an interrupt without system reset can occur when the WD OVRFL RST ENA bit is cleared, and the WD OVRFL INT ENA bit (T1CTL2.6) is set.

Figure 5. Keyboard Scan Using T1IC/CR as an External Interrupt

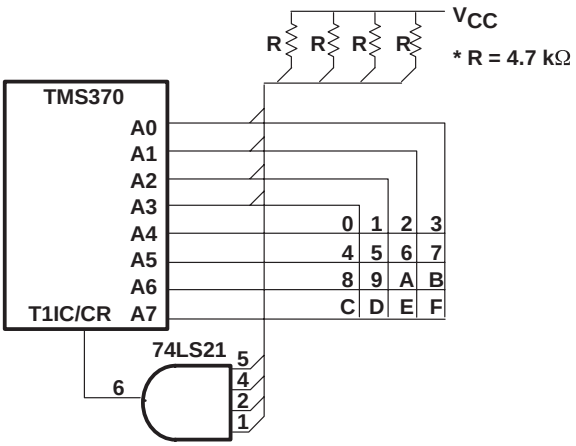

PETITIONER ECOBEE
EX. 1010

T1 I/O Pins

The T1 module includes three I/O pins which can be dedicated for timer functions or as general-purpose I/O pins. The configuration for these pins is controlled through the timer port control registers T1PC1 and T1PC2. Their names and T1 functions are as follows:

- T1EVT: This pin may be used as an external clock input to the prescaler/clock source block. Input frequency may not exceed SYSCLK/2.
- T1IC/CR: Depending on the mode of operation, this pin may be used to input an external signal to trigger loading of the capture register, toggle the T1PWM output pin, reset the counter, or generate an interrupt.
- T1PWM: The T1 function of this pin is to output a pulse width modulated (PWM) signal from the module.

PETITIONER ECOBEE
EX. 1010

T1 Operational Modes

The T1 module may be used in either of two modes of operation: dual compare mode or capture/compare mode. See Section 7.2 of the *TMS370 Family User's Guide* for additional information.

- Dual compare mode: To operate in the dual compare mode, the T1 MODE bit (T1CTL4.7) must be cleared. This mode provides two compare registers (the capture/compare register is configured as a compare register) which can be used to control the period and duty cycle of a PWM signal or for other applications. A block diagram of T1 in the dual compare mode is shown in Figure 6.

Figure 6. Dual Compare Mode for T1

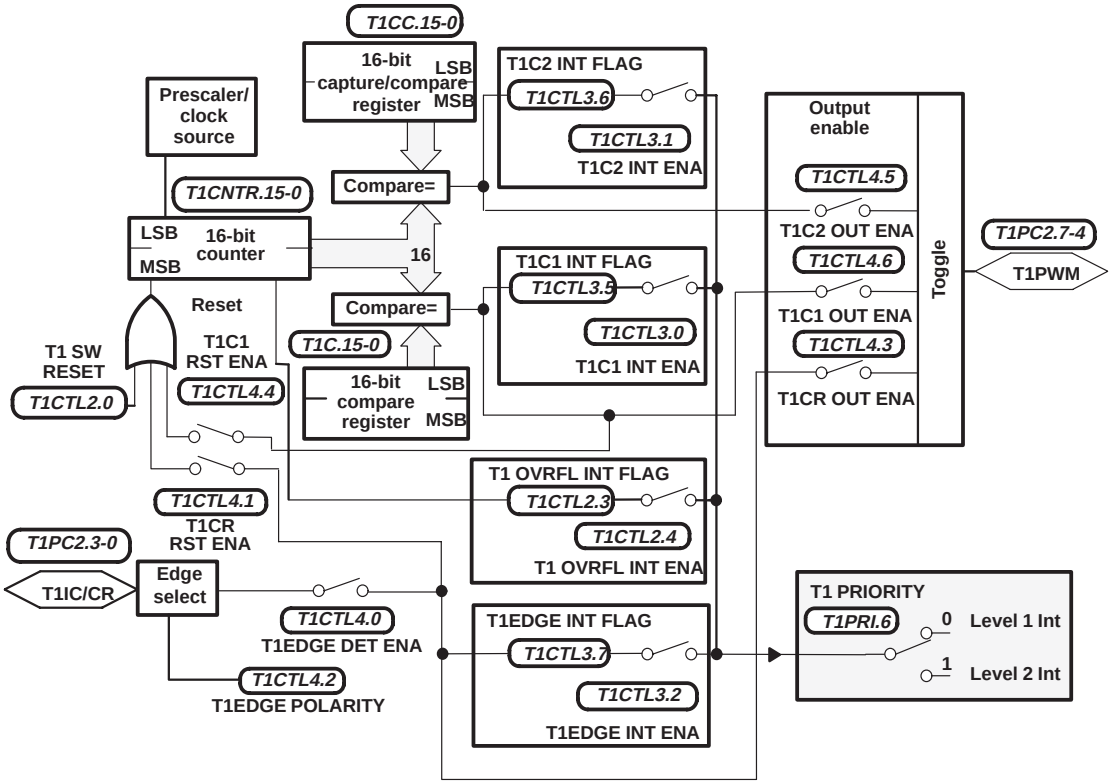

NOTE: The numbers on the diagram, such as 4B.5, identify the register and the bit in the peripheral frame. For example, the actual address of 4B.5 is 104Bh, bit 5, in the T1CTL3 register.

PETITIONER ECOBEE
EX. 1010

- Capture/compare mode: To operate in the capture/compare mode, the T1 mode bit (T1CTL4.7) must be set. This mode provides one compare register, and the capture/compare register is configured as a capture register. The compare register can be used to generate periodic interrupts or toggle the T1PWM pin and the capture register can be used for pulse measurement. A block diagram of T1 in the capture/compare mode is shown in Figure 7.

Figure 7. Capture/Compare Mode for T1

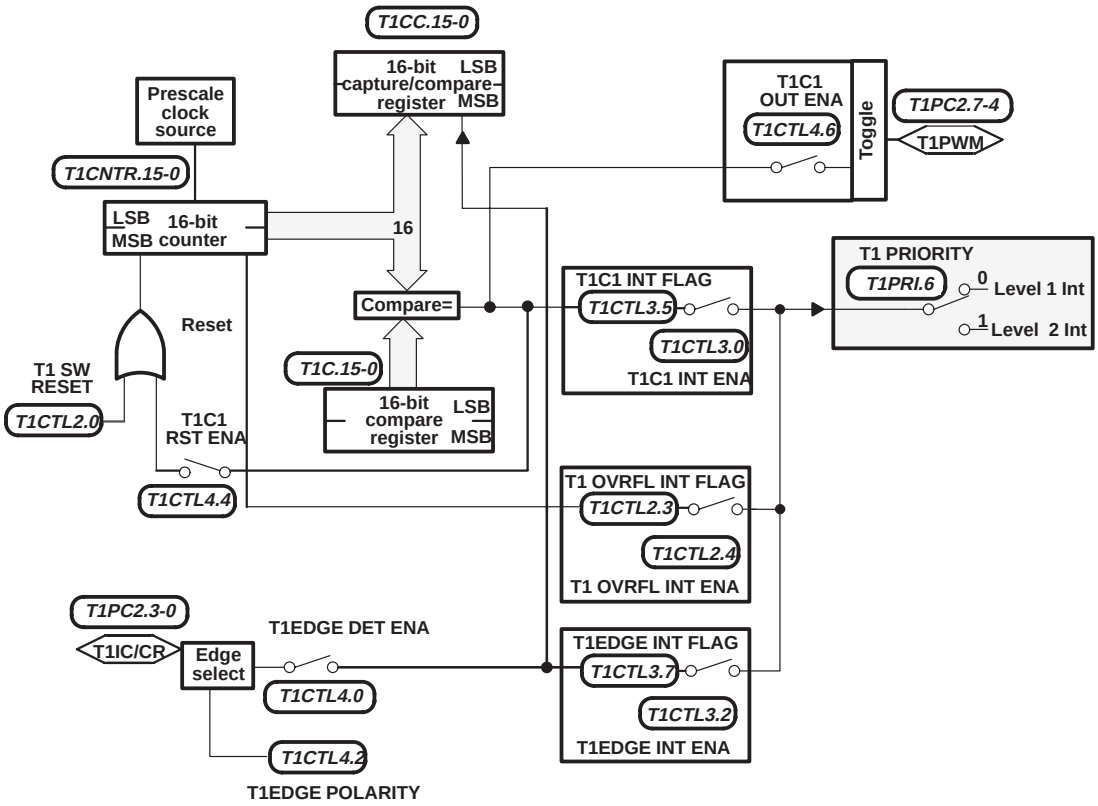

PETITIONER ECOBEE
EX. 1010

T2n (T2A and T2B)

The Timer 2 (T2n) module is a 16-bit general-purpose timer available on several TMS370 devices and is illustrated in Figure 8. TMS370 devices may contain more than 1 T2n Timer Module. *T2A* and *T2B* (T2n) refer to these timer modules. T2n allows program selection of four input clock sources: system clock, external event, pulse accumulate, or no clock. Additional blocks of the T2n module not shown in Figure 8 include the interrupts and I/O pins.

Figure 8. 16-Bit Programmable General-Purpose T2n

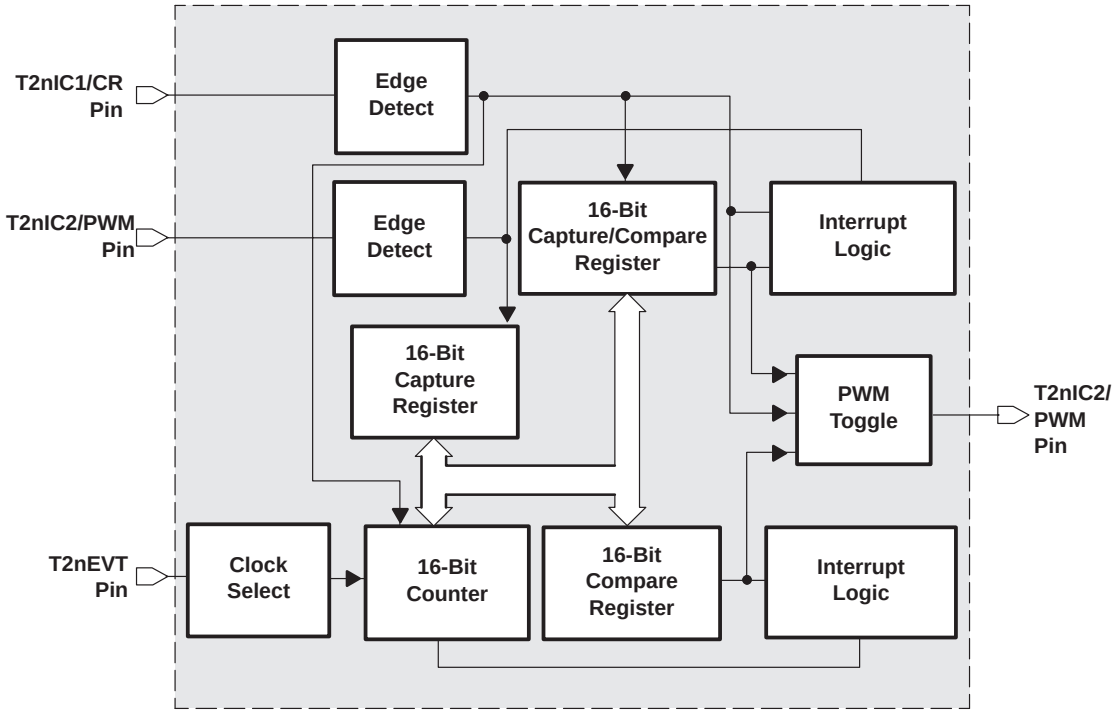

T2n Counter

The T2n block (Figure 8) contains a 16-bit counter, a 16-bit compare register, and a 16-bit capture/compare register just like T1. T2n also contains an additional capture register. T2n provides input capture, output compare, timer overflow, and external event functions. You can choose either the dual compare mode or the dual capture mode of operation for T2n, depending on the needs of your application.

The basic functions of the T2n block are similar to those described for the T1 block (see T1 Counter Section, page 206). The addition of an extra capture register and the lack of a prescale block are the main differences between T1 and T2n. For additional information concerning modes of operation or functions of the T2n block, see Section 8.2 in the *TMS370 Family User's Guide*.

T2n Interrupts

The T2n module provides four different interrupt flags. Depending on the mode of operation, these interrupt flags can be set by one of five different sources. The actions that trigger an interrupt are as follows:

PETITIONER ECOBEE
EX. 1010

- Input capture 1/external edge detection 1: When an active transition occurs on the T2nIC1/CR pin, the T2nEDGE1 INT FLAG bit (T2nCTL2.7) is set. If the T2nEDGE1 DET bit (T2nCTL3.0) is enabled, then this action also loads the contents of the T2n counter into the capture/compare register. Please note, you must be in the dual capture mode of operation for the capture function.
- Input capture 2/external edge detection 2: When an active transition occurs on the T2nIC2/PWM pin, the T2nEDGE2 INT FLAG bit (T2nCTL2.6) is set. If the T2nEDGE2 DET bit (T2nCTL3.1) is enabled, then this action also loads the contents of the T2n counter into the capture register. Please note, you must be in the dual capture mode of operation for these actions to occur.
- Compare equals 1: When the value of the compare register matches the value of the T2n counter, the T2nC1 INT FLAG bit (T2nCTL2.5) is set. This is true for both modes of operation.
- Compare equals 2: When the value of the capture/compare register matches the value of the T2n counter, the T2nC2 INT FLAG bit (T2nCTL2.6) is set. This is true for the dual compare mode of operation only.
- Counter overflow: When the T2n counter overflows from 0FFFFh to 0000h; the T2n OVRFL INT FLAG bit (T2nCTL1.3) is set.

T2n I/O Pins

The T2n module includes three I/O pins which can be dedicated for timer functions or as general-purpose I/O pins. Their names and T2n functions are as follows:

- T2nEVT: This pin may be used as an external clock input or pulse accumulation signal to the T2n module. Input frequency may not exceed SYSCLK/2.
- T2nIC1/CR: Depending on the mode of operation, this pin may be used to input an external signal to trigger loading of the capture/compare register or to toggle the T2nPWM output pin. A signal on this pin may also reset the counter.
- T2nIC2/PWM: In the dual compare mode, the function of this pin is to output a PWM signal from the module. In the dual capture mode, this pin is used to input an external signal to trigger loading the capture register with the contents of the T2n counter.

The configuration for these pins is controlled through the timer port control registers T2nPC1 and T2nPC2.

PETITIONER ECOBEE
EX. 1010

T2n Operational Modes

The T2n module may be used in either of two modes of operation: the dual compare mode or the dual capture mode. See Section 8.2 of the *TMS370 Family User's Guide* for additional information.

- Dual compare mode: To operate in the dual compare mode, the T2nMODE bit (T2nCTL3.7) must be cleared. This mode provides two compare registers (the capture/compare register is configured as a compare register) which can be used to control the period and duty cycle of a PWM signal or for other applications. The dual compare mode of T2n is identical in function to the dual compare mode of T1 with the exception of no optional prescale input for the clock source. A block diagram of T2n in the dual compare mode is shown in Figure 9.

- Dual capture mode: To operate in the dual capture mode, the T2nMODE bit (T2nCTL3.7) must be set. This mode provides two capture registers as well as one compare register. In this mode, the capture/compare register is configured as a capture register. The two capture registers may be used for pulse width measurement and timing, and the compare register can be used to generate periodic interrupts. A block diagram of T2n in the capture/compare mode is shown in Figure 10.

Figure 9. Dual Compare Mode for T2n

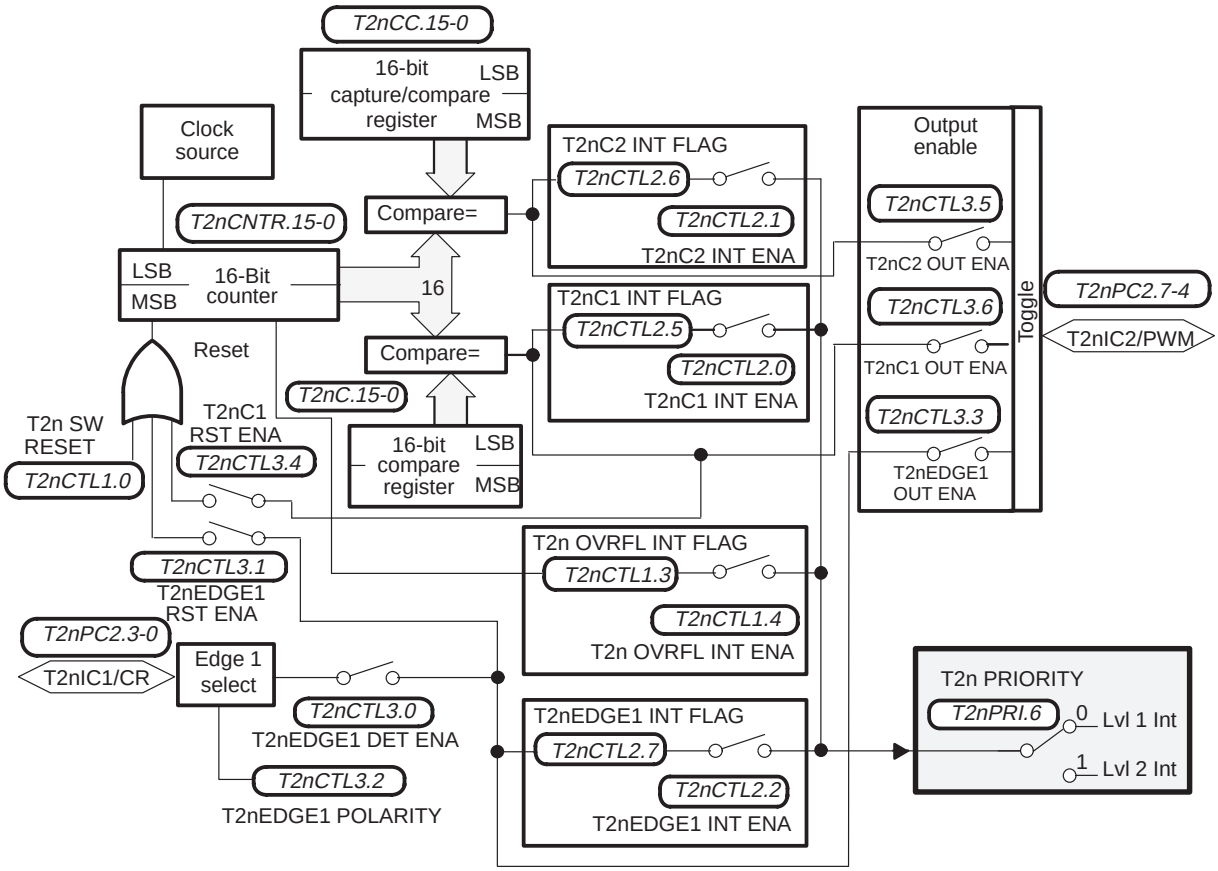

PETITIONER ECOBEE
EX. 1010

Figure 10. Dual Capture Mode for T2n

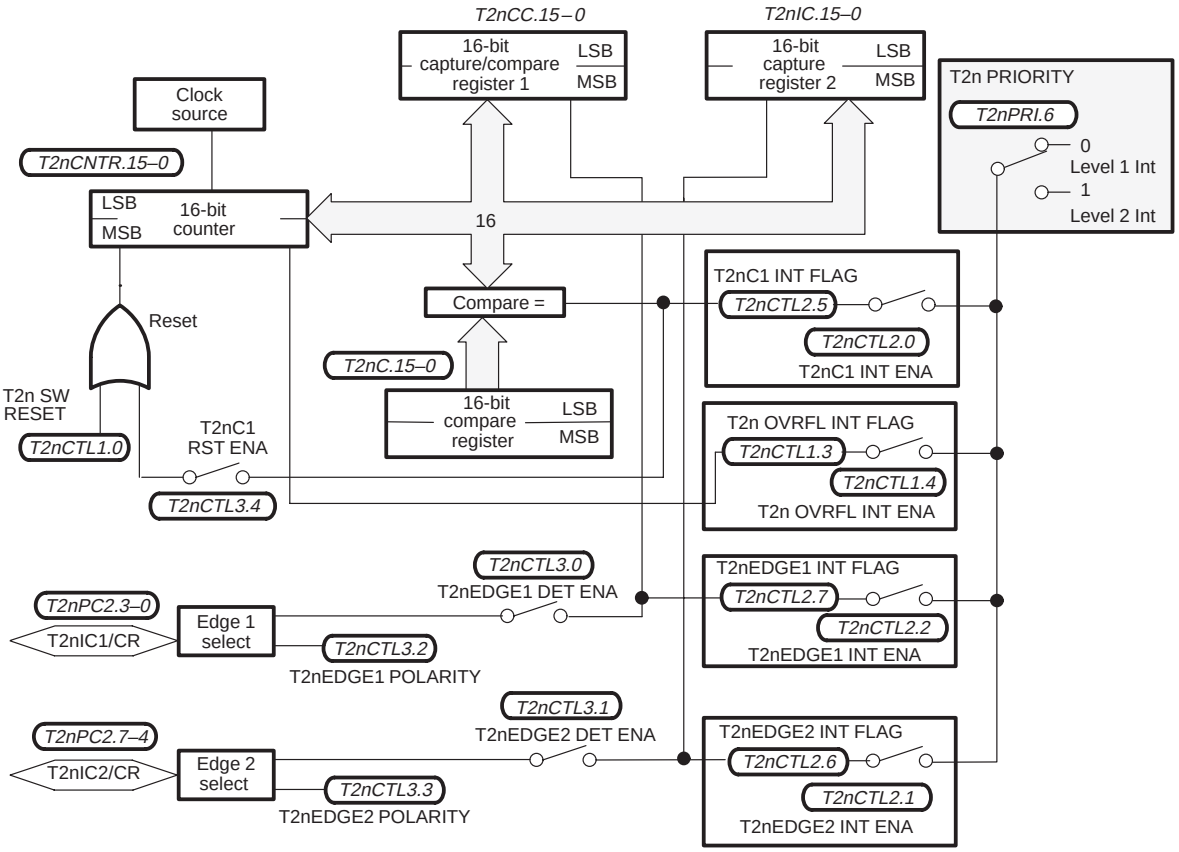

PETITIONER ECOBEE
EX. 1010

Timer Formulas

The following formulas are used to calculate the timer overflow, WD overflow, and compare register values for the T1 and T2n modules. The formulas illustrated in this section deal with time periods. Therefore, the variable SYSCLK is used in the formulas.

Timer 1: T1 and WD Counter Overflow

The maximum counter duration using the internal clock is determined by the internal system clock time (SYSCLK) and the prescale tap (PS). The counter overflow formula is shown below:

$$\text{Maximum counter duration (seconds)} = 2^{16} \times PS \times SYSCLK$$

$$\text{Counter resolution} = PS \times SYSCLK$$

where:

SYSCLK = internal operational frequency
PS = 1, 4, 16, 64, or 256 depending on the prescale tap selected

Table 2 gives the real-time counter overflow rates for various SYSCLK and prescaler values. Please note that the value shown must be divided by two for the WD if the WD OVRFL TAP SEL bit (T1CTL1.7) is set (see Section 7.3 in the *TMS370 Family User's Guide*).

Table 2. T1 Module Counter Overflow Rates

Select 2	Select 1	Select 0	Divide By	SYSCLK Frequency (MHz)			
				0.5	1.0	2.5	5.0
				System Clock Period (ns)			
				2000	1000	400	200
0	0	0	2^{16}	0.131	0.066	0.026	0.013
0	0	1	(P.A.)	†	†	†	†
0	1	0	(Event)	†	†	†	†
0	1	1	(Stop)	†	†	†	†
1	0	0	2^{18}	0.524	0.262	0.105	0.052
1	0	1	2^{20}	2.10	1.05	0.419	0.210
1	1	0	2^{22}	8.39	4.19	1.68	0.839
1	1	1	2^{24}	33.6	16.8	6.71	3.355

† Not applicable.

PETITIONER ECOBEE
EX. 1010

T1: Compare Register Formula

The compare register value required for a specific timing application can be calculated using the following formula:

$$\text{Compare value} = \frac{\text{SYSCLK x t}}{\text{PS}} - 1$$

where:

t = desired timer compare period (seconds)
SYSCLK = external clock frequency
PS = 1, 4, 16, 64, or 256 depending on the prescale tap selected

Table 3 provides some sample compare register values to achieve various desired timings using a 5-MHz SYSCLK.

Table 3. T1 Compare Register Values (SYSCLK = 5 MHz)

Time		Prescale	T1 Compare Register Value (N)		% Error (See Note)
Seconds	mSeconds		Decimal	Hex	
0.0005	0.5	None	2499	009C3h	0.000
0.001	1	None	4999	01387h	0.000
0.002	2	None	9999	0270Fh	0.000
0.005	5	None	24999	061A7h	0.000
0.01	10	None	49999	0C34Fh	0.000
0.02	20	/4	24999	061A7h	0.000
0.05	50	/4	62499	0F423h	0.000
0.1	100	/16	31249	07A11h	0.000
0.2	200	/16	62499	0F423h	0.000
0.5	500	/64	39062	09896h	0.000
1.0	1000	/256	19530	04C4Ah	0.001
2.0	2000	/256	39061	09895h	0.001
3.0	3000	/256	58593	0E4E1h	0.001

NOTE: % error induced by the T1 formula. This error margin will vary depending on the desired timer compare period and the minimum timer resolution (PS × SYSCLK).

PETITIONER ECOBEE
EX. 1010

Timer 2: T2n Counter Overflow

The maximum counter duration using the internal clock is determined by the internal system clock time (SYSCLK). This relationship is shown below:

Maximum counter duration (seconds) = $2^{16} \times$ SYSCLK

Counter resolution = SYSCLK

where:
SYSCLK = internal operational frequency

Table 4 gives the real-time counter overflow rates for various SYSCLK values.

Table 4. T2n Module Counter Overflow Rates

SYSCLK Frequency (MHz)	Timer Overflow Rates
20.0	13.11 ms
12.0	21.85 ms
8.0	32.77 ms
5.0	52.43 ms
3.579	73.23 ms
2.0	131.07 ms

PETITIONER ECOBEE
EX. 1010

Timer 2: Compare Register Formula

The compare register value required for a specific timing application can be calculated using the following formula:

$$\text{Compare value} = (\text{SYSCLK} \times t) - 1$$

where:

t = desired timer compare period (seconds)
SYSCLK = internal operational frequency

Table 5 provides some sample compare register values to achieve various desired timings.

Table 5. T2n Compare Register Values (SYSCLK = 5 MHz)

Time		T2n Compare Register Value (N)		
Seconds	**mSeconds**	**Decimal**	**Hex**	**% Error (See Note)**
0.0005	0.5	2499	009C3h	0.000
0.001	1	4999	01387h	0.000
0.002	2	9999	0270Fh	0.000
0.005	5	24999	061A7h	0.000
0.010	10	49999	0C34Fh	0.000
0.013	13	64999	0FDE7h	0.000

NOTE: % error induced by the T2n formula. This error margin will vary depending on the desired timer compare period and the minimum timer resolution (SYSCLK).

PETITIONER ECOBEE
EX. 1010

Timer Application Software Routine Examples

The following examples show various uses of the timer modules. Each example includes source code and timing diagram. The examples shown attempt to illustrate typical timer application requirements. The Common Register Equate table for all the software examples (T2A) is shown below. (See the Conclusion section of this report to determine how to download copies of the software examples). The equates for T2B are the same but the addresses are P080–P08F

Table 6. Common Register Equates

```
T1CNTRM       .EQU   P040   ;T1       Counter MSB
T1CNTRL       .EQU   P041   ;T1       Counter LSB
T1CM          .EQU   P042   ;T1       Compare register 1 MSB
T1CL          .EQU   P043   ;T1       Compare register 1 LSB
T1CCM         .EQU   P044   ;T1       Capture 1/compare 2 register MSB
T1CCL         .EQU   P045   ;T1       Capture 1/compare 2 register LSB
T1CTL1        .EQU   P049   ;T1       Control register 1
T1CTL2        .EQU   P04A   ;T1       Control register 2
T1CTL3        .EQU   P04B   ;T1       Control register 3
T1CTL4        .EQU   P04C   ;T1       Control register 4
T1PC1         .EQU   P04D   ;T1       Port control 1
T1PC2         .EQU   P04E   ;T1       Port control 2
T1PRI         .EQU   P04F   ;T1       Priority control
T2ACNTRM      .EQU   P060   ;T2A      Counter MSB
T2ACNTRL      .EQU   P061   ;T2A      Counter LSB
T2ACM         .EQU   P062   ;T2A      Compare register 1 MSB
T2ACL         .EQU   P063   ;T2A      Compare register 1 LSB
T2ACCM        .EQU   P064   ;T2A      Capture 1/compare 2 register MSB
T2ACCL        .EQU   P065   ;T2A      Capture 1/compare 2 register LSB
T2AICM        .EQU   P066   ;T2A      Capture 2 register MSB
T2AICL        .EQU   P067   ;T2A      Capture 2 register LSB
T2ACTL1       .EQU   P06A   ;T2A      Control register 1
T2ACTL2       .EQU   P06B   ;T2A      Control register 2
T2ACTL3       .EQU   P06C   ;T2A      Control register 3
T2APC1        .EQU   P06D   ;T2A      Port control 1
T2APC2        .EQU   P06E   ;T2A      Port control 2
T2APRI        .EQU   P06F   ;T2A      Priority control
```


PETITIONER ECOBEE
EX. 1010

Real-Time System Control: Periodic Interrupt of T1

Interrupt the main program every 10 ms (100 times a second).

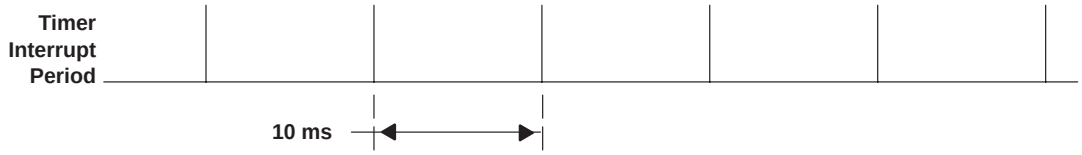

This application routine provides a T1 compare equal interrupt 100 times a second. This routine compares the present value of the 16-bit T1 counter to the value stored in the 16-bit T1C1 register. When these two registers are equal, an interrupt will occur and the T1 counter will be reset. The compare value to give 10 ms is as follows:

$$\text{compare} = ((\text{time needed} \times \text{SYSCLK})/\text{PS}) - 1$$
$$\text{compare} = (.010 \times 5 \times 10^6) - 1$$
$$\text{compare} = 49999 \text{ or C34Fh}$$

where:

SYSCLK = 5 MHz

The program loads the value C34Fh into the T1 compare register putting the MSB value in first. All output pins associated with T1 are set as general-purpose input pins since their T1 pin functions are not needed for this application. The system clock is chosen as the T1 clock source, while the watchdog prescale remains unchanged. The program then resets the counter, clears all interrupt flags, and enables the T1C1 interrupt. The timer is set to run in the dual compare mode but the capture/compare mode will work just as well in this example. The counter is initialized to reset whenever the T1C1 register equals the counter register so that the counter will be reset every 10 milliseconds. This routine will continue to interrupt the processor until the global interrupt or the T1C1 interrupt enable in T1CTL3 is disabled.

PETITIONER ECOBEE
EX. 1010

10-ms Timer Interrupt Routine

```
T1INIT   MOV #0C3h,T1CM         ;Value to give 10 ms with 5-MHz SYSCLK
                                ; (C34F)
         MOV #04Fh,T1CL         ;Must load MSB first then LSB.
         MOV #00000000b,T1PC1   ;T1EVT, T1PWM, AND T1IC/CR pins are set to
         MOV #00000000b,T1PC2   ; general-purpose input pins.
         MOV #00000000b,T1PRI   ;Select interrupt priority level 1.
         MOV #00010000b,T1CTL4  ;Select dual compare mode and cause T1
                                ; to reset on compare equal.
         MOV #00000001b,T1CTL3  ;Clear any pending interrupt flags, and allow
                                ; the compare 1 flag to cause an interrupt.
         AND #11110000b,T1CTL1  ;Select the system clock as timer clock
                                ; source and leave the WD unchanged.
         MOV #00000001b,T1CTL2  ;Reset the counter (could enable WD here).
         EINT                   ;Begin interrupting main program.
MAIN     ...                    ;Execute main program here.
         ...
;        ––TIMER 1 INTERRUPT SERVICE ROUTINE––
T1INT                           ;Enter T1 interrupt service routine
                                ; 100 times/s.
         MOV #00000001b,T1CTL3  ;Clear the T1C1 interrupt flag, reenable
                                ; T1C1.
         ...                    ;Execute interrupt code.
         ...
         RTI
```


PETITIONER ECOBEE
EX. 1010

Output Pulse Width Generation: 1-kHz Square Wave

Output a 1-kHz square wave (50% duty cycle).

This application routine generates a 1-kHz square wave output signal by using the 16-bit T1 compare register to toggle the T1PWM output pin. Since the timer needs to toggle the output pin twice to produce one square wave pulse, the timer needs to toggle at a 2-kHz rate, or every 0.5 ms. The compare value to give 0.5 ms is:

$$\text{compare} = ((\text{time needed} \times \text{SYSCLK})/\text{PS}) - 1$$
$$\text{compare} = (0.0005 \times 5 \times 10^6) - 1$$
$$\text{compare} = 2499 \text{ or } 09C3h$$

where:

SYSCLK = 5 MHz

The program loads the value 09C3h into the T1 compare register, putting the MSB value in first. The T1PWM pin is set to the PWM output function and the other T1 pins are set to general-purpose input pins since their T1 pin functions are not needed for this application. The system clock is chosen as the T1 clock source, while the WD prescale remains unchanged. The program then resets the counter, clears all interrupt flags, and disables all T1 interrupts. The timer is set to run in dual compare mode, but the capture/compare mode works just as well in this example. The counter resets whenever the T1C1 register equals the counter register, so that the counter resets every 0.5 ms. Once the T1 module is initialized, a 1-kHz square wave signal is output continuously on the T1PWM pin without further program intervention.

PETITIONER ECOBEE
EX. 1010

50% Square Wave Signal Routine

```
SQUARE  MOV #009h,T1CM        ;Value to give .5 ms with 5-MHz SYSCLK (9C3h)
        MOV #0C3h,T1CL        ;Must load MSB first, then LSB.
        MOV #00000000b,T1PC1  ;T1EVT pin is set as a general-purpose input
                              ; pin.
        MOV #00100000b,T1PC2  ;Enable T1PWM pin (initial output value
                              ; selected by bit 6). T1IC/CR is
                              ; general-purpose input pin.
        MOV #01010000b,T1CTL4 ;Select dual compare mode, enable PWM toggle,
                              ; and cause T1 to reset on compare equal.
        AND #11110000b,T1CTL1 ;Select the system clock as timer clock source
                              ; and leave the WD unchanged.
        MOV #00000000b,T1CTL3 ;Clear and disable all interrupts.
        MOV #00000001b,T1CTL2 ;Reset the counter (could enable
                              ; WD here).
MAIN    ...                   ;Execute main program here.
```


PETITIONER ECOBEE
EX. 1010

Pulse Width Modulation (PWM) #1

Output a 1-kHz signal with a fixed 20% duty cycle.

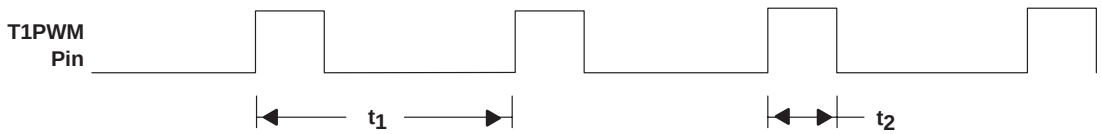

In this example of pulse width modulation, the pulse frequency remains 1 kHz while the duty cycle is 20%. The duty cycle is defined as the time the pulse remains high divided by the period of the pulse, so in this case, the pulse remains high for 0.2 ms per cycle. The registers get configured like the square wave example on page 223, but now the second compare register gets used to provide the high pulse period, t_2, while the first compare register is used to provide the 1-ms period, t_1. The program loads the value 1387h into the T1 compare register to control the 1-ms period (t_1) and 03E7h into the T1 capture/compare register to control the t_2 pulse width. Both compare registers are enabled to toggle the output pin to give the proper pulse signal. Once the program starts the PWM signal, the signal continues without any further program intervention.

If the duty cycle or frequency needs changing once under way, modify only the capture/compare 2 register or the compare 1 register, respectively (See PWM #2, page 227).

PETITIONER ECOBEE
EX. 1010

Routine

```
PWM     MOV #013h,T1CM         ;Value to give 1 ms with
                               ; 5-MHz SYSCLK (1387h)
        MOV #087h,T1CL         ;Must load MSB first then LSB.
        MOV #003h,T1CCM        ;Value to give .2 ms with
                               ; 5-MHz SYSCLK (3E7h)
        MOV #0E7h,T1CCL        ;Must load MSB first then LSB.
        MOV #000000000b,T1PC1  ;T1EVT pin is set as a general-
                               ; purpose input pin.
        MOV #01110000b,T1CTL4  ;Select dual compare mode, enable
                               ; toggle function of compare registers
                               ; 1 and 2, and cause T1 to reset
                               ; on C1 equal.
        AND #11110000b,T1CTL1  ;Select the system clock as timer clock source
                               ; and leave the WD unchanged.
        MOV #00000001b,T1CTL2  ;Reset the counter (could enable
                               ; WD here).
        MOV #00000000b,T1CTL3  ;Clear and disable all interrupts.
        MOV #01100000b,T1PC2   ;Enable T1PWM pin (initial output value
                               ; selected by bit 6). T1IC/CR is a general-
                               ; purpose input pin.
MAIN    ...                    ;Execute main program here.
        ...
```


PETITIONER ECOBEE
EX. 1010

PWM #2

Output a 1-kHz signal with a varying duty cycle.

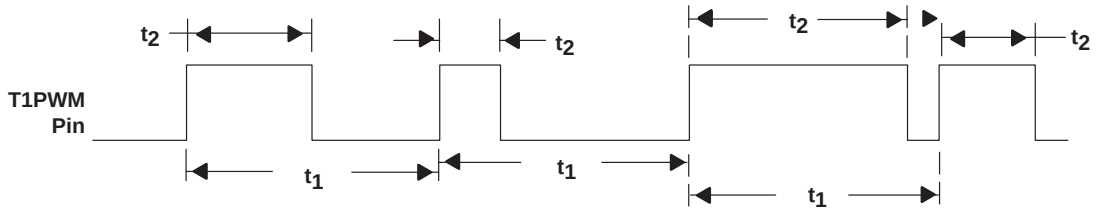

In this example of PWM, a fixed-frequency signal (1 kHz) is output with a varying duty cycle. The main difference between this routine and the the previous routine (PWM #1) is that the duty cycle, t_2, may vary. In this PWM example, the program changes the pulse width by altering the value in the capture/compare register. The compare register controls the period of the signal, t_1, and is not changed in this routine, while the capture/compare register controls the varying duty cycle, t_2.

The T1 service routine is entered each time the compare register equal flag gets set (every 1 ms in this example). The main program is required to load any new values for the PWM duty cycle into the HIDC and LODC working registers. The T1 service routine is only enabled whenever the HIDC:LODC register pair is updated and the T1C1 interrupt is enabled (T1CTL3.0). The routine stops the PWM signal, loads the new values, and restarts. Stopping the PWM signal helps avoid the possibility of inverting the signal if a larger value is written than previously existed (for example, changing from a 20% to an 80% duty cycle signal.)

PETITIONER ECOBEE
EX. 1010

Routine

```
T1INIT   MOV  #013h,T1CM         ;Value to give 1 ms with 5-MHz
                                 ; SYSCLK (1387h)
         MOV  #087h,T1CL         ;Must load MSB first then LSB.
         MOV  HIDC,T1CCM         ;Load value for the duty cycle.
         MOV  LODC,T1CCL         ;Must load MSB first then LSB.
         MOV  #00000000b,T1PC1   ;T1EVT pin is set as a general-
                                 ; purpose input.
         MOV  #00000000b,T1PRI   ;Set the T1 interrupt priority to level 1.
         MOV  #01110000b,T1CTL4  ;Select dual compare mode, enable toggle
                                 ; function of compare registers 1 and 2,
                                 ; and enable T1 to reset on C1 equal.
         MOV  #00000000b,T1CTL1  ;Select the system clock as
                                 ; timer clock source.
         MOV  #00000001b,T1CTL2  ;Reset the counter (could enable WD here).
         MOV  #00000000b,T1CTL3  ;Clear and disable all interrupts.
         MOV  #01100000b,T1PC2   ;Enable T1PWM (initial output value
                                 ; selected by bit 6). T1IC/CR is a
                                 ; general-purpose input.
         EINT                    ;Enable interrupts.
MAIN     ...                     ;Execute main program here.
         ...                     ;Any updates to the PWM duty cycle registers
         ...                     ; (HIDC/LODC) need to be done here.
UPDATE   MOV  #01h,T1CTL3        ;Allow the compare flag to cause a timer
         ...                     ; interrupt only when the duty cycle
         ...                     ; (HIDC/LODC) registers have been altered.
         ...
;        ---Timer 1 Interrupt Routine to follow---
T1INT    MOV  #00000011b,T1CTL1  ;Stop T1 if an update has been made.
         MOV  #00000001b,T1CTL2  ;Reset the counter.
         MOV  #01010000b,T1PC2   ;Reset the T1PWM pin to general-purpose
                                 ; output with the present value of the
                                 ; PWM pin.
         MOV  #01010000b,T1PC2   ;T1PWM pin outputs a 1.
         MOV  #01100000b,T1PC2   ;Reenable the T1PWM function with an initial
                                 ; value of 1.
         MOV  HIDC,T1CCM         ;Load new value for the PWM duty cycle.
         MOV  LODC,T1CCL         ; Must load MSB first then LSB.
         MOV  #00h,T1CTL1        ;Reselect the system clock as the T1 clock
                                 ; source.
         MOV  #0000000b,T1CTL3   ;Clear the T1C1 interrupt flag and
                                 ; disable the T1C1 flag again.
RETURN   RTI                     ;Return to the main routine.
```


PETITIONER ECOBEE
EX. 1010

Pulse Position Modulation (PPM)

Output a fixed 0.2-ms pulse at a variable frequency (1-kHz rate initially).

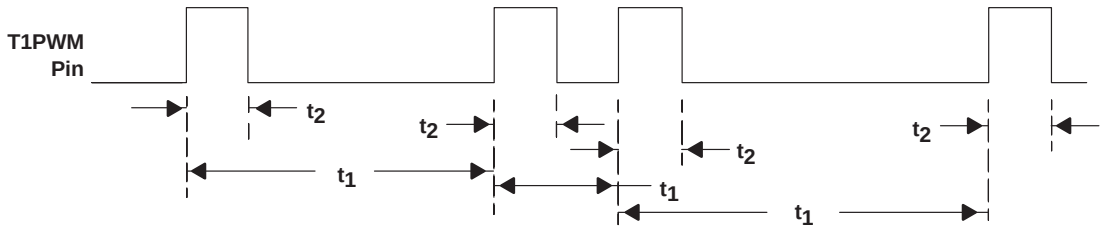

In this example of PPM, the high pulse width, t_2, remains constant while the periods, t_1, of the pulses vary. The program code for this example is similar to the PWM #2 example. In the PWM #2 example, the program changes the pulse width by varying the value in the capture/compare register. In this PPM example, the program varies the frequency of the pulses by changing the value in the compare register (T1CM, T1CL).

For the cleanest transition, clear the compare 1 equal flag and wait until that flag gets set again before putting a new value into the compare register. This will help to avoid inverting the signal which could happen if a larger value was written than previously existed.

PETITIONER ECOBEE
EX. 1010

Routine

```
T1INIT   MOV  #013h,T1CM         ;Value to give 1 ms with 5-MHz
                                 ; SYSCLK (1387h)
         MOV  #087h,T1CL         ;Must load MSB first then LSB.
         MOV  #004h,T1CCM        ;Load value for the .2-ms duty cycle
         MOV  #0E1h,T1CCL        ;Must load MSB first then LSB.
         MOV  #00000000b,T1PC1   ;T1EVT pin is set as a general-
                                 ; purpose input.
         MOV  #01100000b,T1PC2   ;Enable T1PWM (initial output value
                                 ; selected by bit 6). T1IC/CR is a
                                 ; general-purpose input.
         MOV  #00000000b,T1PRI   ;Set the T1 interrupt priority to level 1.
         MOV  #01110000b,T1CTL4  ;Select dual compare mode, enable toggle
                                 ; function of compare registers 1 and 2,
                                 ; and enable T1 to reset on C1 equal.
         MOV  #00000000b,T1CTL1  ;Select the system clock as
                                 ; timer clock source.
         MOV  #00000000b,T1CTL3  ;Clear and disable all interrupts.
         MOV  #00000001b,T1CTL2  ;Reset the counter (could enable WD here).
         EINT                    ;Enable interrupts.

MAIN     ...                     ;Execute main routine here.
         ...                     ;Any updates to the PPM frequency registers
         ...                     ; HIFREQ/LOFREQ will need to be done here.
UPDATE   MOV  #01h,T1CTL3        ;Allow the compare flag to cause a timer
         ...                     ; interrupt only when the duty cycle
         ...                     ; (HIFREQ/LOFREQ) registers have been
         ...                     ; altered.

T1INT    MOV  #00000000b,T1CTL3  ;Clear the T1 compare 1 interrupt flag and
                                 ; disable the T1 compare 1 flag again.
         MOV  #00000011b,T1CTL1  ;Stop T1 if an update has been made.
         MOV  #00000001b,T1CTL2  ;Reset the counter.
         MOV  #01010000b,T1PC2   ;Reset the T1PWM pin to general-purpose
                                 ; output with the present value of the
                                 ; PWM pin.
         MOV  #01010000b,T1PC2   ;T1PWM pin outputs a 1.
         MOV  #01100000b,T1PC2   ;Reenable the T1PWM function with an initial
                                 ; value of l.
         MOV  HIFREQ,T1CM        ;Load new value for the PPM frequency.
         MOV  LOFREQ,T1CL        ;Must load MSB first then LSB.
         MOV  #0C0h,T1CTL1       ;Reselect the system clock as the T1 clock
                                 ; source.
RETURN   RTI                     ;Return to the Main routine.
```


PETITIONER ECOBEE
EX. 1010

Pulse Width Measurement Using Pulse Accumulation Clock Source

Measures the positive pulse of a signal with input connected to both T1IC/CR and T1EVT pins.

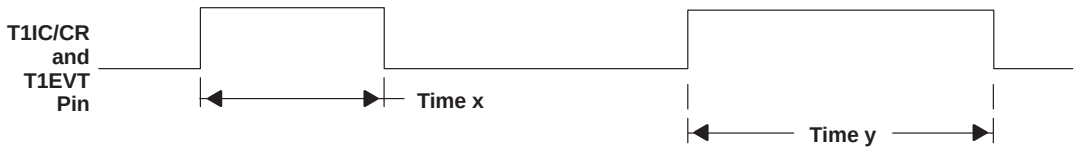

This method measures the time that a single pulse remains high. The signal line connects to both the input capture (T1IC/CR) and the event counter (T1EVT) inputs. T1 runs in the dual compare mode and uses the pulse accumulate clock source, which allows the system clock to increment the counter as long as the T1EVT input pin remains high. The signal is also connected to the T1IC/CR counter reset pin to give the program an indication of when the external pulse goes low and ends the pulse accumulation function. The routine configures the T1 pins first and then selects a dual compare mode of operation. The interrupt flags are cleared and a falling edge on the T1IC/CR pin is enabled to cause an interrupt. The pulse accumulation clock source is chosen and the counter is then reset.

The counter does not start until the pulse signal goes high, and stops counting when the signal goes back low. The interrupt routine checks for the end of the pulse or a counter overflow. If the interrupt is caused by an overflow, the counter increments the STOREOF register, which is equivalent to the most significant byte of the timer register, then returns to the main routine. If the interrupt is caused by the pulse going low, the routine reads the contents of the T1 counter register, stores it into the STOREM:STOREL register pair and returns to the main routine. This method measures pulses up to approximately 3.36 seconds with the help of the STOREOF overflow storage register. If longer pulses are required to be measured, additional overflow storage registers can be used.

PETITIONER ECOBEE
EX. 1010

Pulse Accumulation Measurement PWM Routine

```
        .REG STOREOF             ;Registers used in this routine
        .REG STOREM
        .REG STOREL
        .REG BITS

        CLR  STOREOF             ;Initialize the registers that will be used
        CLR  STOREM              ;  in this routine.
        CLR  STOREL
        CLR  BITS

TIMEPULSMOV  #00000010b,T1PC1    ;T1EVT and T1IC/CR pins enabled; T1PWM pin
        MOV  #00000010b,T1PC2    ; is set up as general-purpose input pin.
        MOV  #00,T1PRI           ;Select level 1 interrupts for T1.
        MOV  #00000001b,T1CTL4   ;Select dual compare mode and watch for
                                 ; a falling edge on the T1IC/CR pin.
        MOV  #00000001b,T1CTL1   ;Select the pulse accumulate clock source.
        MOV  #00000100b,T1CTL3   ;Clear interrupt flags, enable falling
                                 ; edge on the T1IC/CR pin to cause
                                 ; an interrupt.
        MOV #00010001b,T1CTL2    ;Reset the counter, clear and enable the
                                 ; the overflow interrupt. (Could enable WD
                                 ; here.)
        EINT                     ;Enable interrupts.
        ...
MAIN    ...                      ;Main routine here.
        ...
;       -- T1 interrupt routine to follow --
T1INT   BTJO #08h,T1CTL2,OVERFLW ;Was this interrupt caused by overflow?
        AND  #0F7h,T1CTL2        ; Yes, jump to OVERFLW.
        MOV  T1CNTRL,STOREL      ; No, load the value in the T1CNTRL
        MOV  T1CNTRM,STOREM      ; registers (LSB first) into the STORE
                                 ; registers.
        MOV  #00000100b,T1CTL3   ;Clear the T1IC/CR flag.
        MOV  #00000001b,T1CTL4   ;Reenable the T1IC/CR falling edge detect.
        OR   #00000001b,BITS     ;Signal to main routine that pulse was read.
                                 ; BITS register may be used by main routine.
        MOV  #00000001b,T1CTL2   ;Reset the counter.
        RTI                      ;Return from interrupt.
OVERFLW AND  #11110111b,T1CTL2   ;Clear the overflow flag, then increment #
        INC  STOREOF             ; of overflows (equivalent timer bits
                                 ; 16–23).
        RTI                      ;Return from interrupt.
```


PETITIONER ECOBEE
EX. 1010

Counting External Pulses Relative to an External Signal

Determines the number of external clock pulses per measure signal with the measure signal attached to the T1IC/CR pin and the clock signal attached to the T1EVT pin.

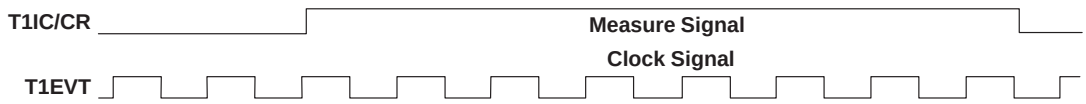

In this example, two signals are input to the processor, a measure signal and a clock signal. The goal is to determine how many clock signals happen during one high pulse of the measure signal. The clock signal connects to the T1EVT pin and the measure signal connects to the T1IC/CR pin. The clock signal will now increment the counter instead of the system clock as in the previous example. Because clock continues to run after measure goes low, the timer module will run in the capture/compare mode and use the 16-bit capture/compare register to store the value of the counter the instant that measure goes low.

One condition can occur when a counter overflow happens at almost exactly the same time the measure signal goes low, so that both interrupt flags are set. The problem is then whether or not to increment the MSB counter register (STOREOF). If the capture register reads FFxxh, then the counter overflowed just after the measure signal went low. If the register reads 00xxh, the counter overflowed just before the measure pulse went low, so the MSB counter register (STOREOF) should be incremented.

PETITIONER ECOBEE
EX. 1010

External Pulse Counting Routine

```
        .REG STOREOF            ;Registers used in this routine
        .REG STOREM
        .REG STOREL
        .REG BITS

        CLR  STOREOF             ;Clear registers used to store the sum of
        CLR  STOREM              ; the T1EVT pulses.
        CLR  STOREL
T1INIT  MOV  #02h,T1PC1          ;T1EVT and T1IC/CR pins enabled, T1PWM pin
        MOV  #02h,T1PC2          ; set to general-purpose input pin.
        MOV  #40h,T1PRI          ;Select interrupt priority level 2 for T1.
        MOV  #81h,T1CTL4         ;Select capture/compare mode, enable the
                                 ; T1IC/CR pin to load the capture register
                                 ; on a falling pulse.
        MOV  #04h,T1CTL3         ;Clear the interrupt flags and enable the
                                 ; T1IC/CR pin to cause an interrupt.
        MOV  #02h,T1CTL1         ;Choose event input as clock source.
        MOV  #11h,T1CTL2         ;Reset the counter, clear and enable the
                                 ; overflow interrupt (WD can enable here).
        EINT
        ...
;       -- Interrupt routine to follow. --
T1INT                            ;Interrupt routine
        BTJZ  #08h,T1CTL2,PULSELO ;Was interrupt caused by a low pulse?
        AND   #0F7h,T1CTL2       ;No, clear overflow flag, then increment
        INC   STOREOF            ; the overflow register (STOREOF).
        RTI
PULSELO MOV   T1CCL,STOREL       ;YES, load the value in the capture
                                 ; register LSB first into the STORE
        MOV   T1CCM,STOREM       ; registers.
        BTJZ  #08h,T1CTL2,NOOVER ;Was there an overflow just now?
        AND   #0F7h,T1CTL2       ;Yes, clear the overflow flag.
        CMP   #0FFh,STOREM       ;If overflow and pulse low, which came
                                 ; first?
        JEQ   NOOVER             ;If FFxxh, overflow happened after pulse
                                 ; low
        INC   STOREOF            ;if 00xxh, overflow happened first,
                                 ; increment register.
NOOVER  MOV   #01h,T1CTL2        ;No, reset the counter.
        MOV   #04h,T1CTL3        ;Clear the interrupt flag, reenable edge
                                 ; interrupt.
        MOV   #81h,T1CTL4        ;Reenable the T1IC/CR edge detect.
        OR    #1,BITS            ;Signal to the main routine that pulse was
                                 ; read.
        RTI                      ;Return from interrupt.
```


PETITIONER ECOBEE
EX. 1010

Output Pulse Drive Referenced to Input Signal: TRIAC Controller or One Shot

Output a 1-ms pulse on every positive edge of an input signal. The input signal goes to IC/CR pin.

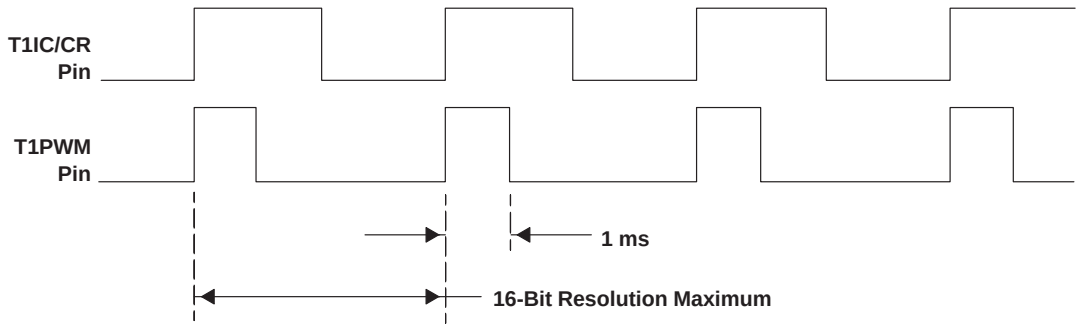

In this example, a rising edge on the T1IC/CR input pin causes a 1-ms pulse to be output on the T1PWM pin. To give a simple application, this could be used in 60-Hz lamp dimmer or motor speed controller where the input is the 60-Hz signal and the output connects to the output driver. The timer is set up to clear the counter whenever the input pulse goes high and at the same time toggle the PWM pin. The counter then begins counting and whenever it equals the compare register, the PWM pin toggles. The program then enters the interrupt service routine after the rising edge and resets the edge detection circuitry. This routine is the only program intervention needed to do this function. If the pulse length becomes greater than one overflow value plus 1 ms, the PWM will toggle and may corrupt the output. The overflow time for this value of a prescaler is about 54 ms. Change the prescaler to a higher value if a greater range is needed.

One Shot Routine

```
                                ;Single cycle should be under 1 timer overflow.
TRIAC  MOV  #04h,T1CM           ;Value to give 1 ms with 5-MHz SYSCLK (04E1h)
       MOV  #0E1h,T1CL          ;Must load MSB first then LSB.
       MOV  #00h,T1PC1          ;T1EVT pin is set as a general-purpose input
                                ; pin.
       MOV  #22h,T1PC2          ;Enable the T1PWM and T1IC/CR pins.
       MOV  #4Fh,T1CTL4         ;Select dual compare mode, enable the C1
                                ; register and a rising edge on the T1IC/CR
                                ; pin to toggle the T1PWM pin, enable the
                                ; T1IC/CR pin to reset the counter.
       MOV  #74h,T1CTL1         ;Select the /4 prescale value and init the WD.
       MOV  #04h,T1CTL3         ;Clear interrupt flags, enable active edge on
                                ;  T1IC/CR to cause an interrupt.
       MOV  #01h,T1CTL2         ;Reset the counter (could enable WD here).
       EINT
       ...
T1INTERR
       MOV  #4Fh,T1CTL4         ;Re-enable T1IC/CR active edge interrupt.
       MOV  #04h,T1CTL3         ;Clear T1IC/CR active edge interrupt.
       RTI
```


PETITIONER ECOBEE
EX. 1010

Pulse Width Measurement: Time Between Edges

Measures the time between the rising edge on one signal and the falling edge of another signal using T2A in dual capture mode.

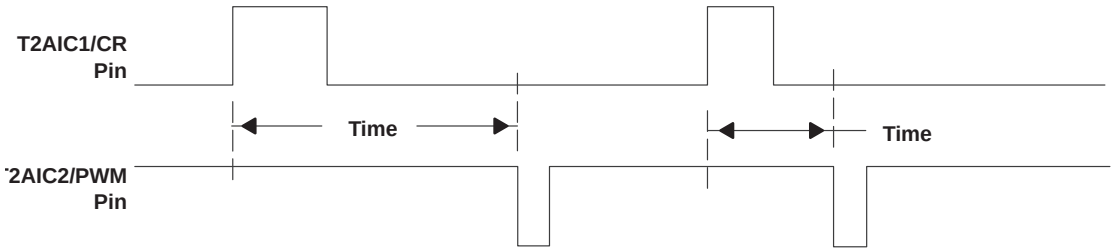

How much time is between the rising edge of one signal and the falling edge of another signal? This example uses the T2A module with its dual capture registers to accurately give the answer to this problem. In this example, the program configures T2A in the dual capture mode with the rising signal input into the T2AIC1/CR pin and the falling signal input into the T2AIC2/PWM pin. The port pins are configured to the correct value and the interrupts are set up to allow the correct edges to generate interrupts and store the counter value into the appropriate capture register.

The counter continually increments, overflows, and generates an interrupt even though it has not detected the first rising edge. This is necessary because the counter may overflow immediately after the circuit detects a rising edge. The software could be too slow to react to this condition, which is only a few microseconds wide, so the overflow interrupt remains active. When the circuit detects the rising edge of the first signal, the processor stores the capture register value into a register pair. The processor then keeps track of the overflows which happen about every 13.1 ms with a 5-MHz SYSCLK signal, and waits for the falling edge of the second signal.

When it detects this falling edge, the first capture latch value is subtracted from this second capture latch value and overflows to give the time from one edge to the other. As in the external pulse counting example on page 233, the program must consider the possibility of the falling edge coming at the same time as the counter overflow. By using the two capture latches, this program can handle the instances when the rising and falling edges happen very close together. Since an 8-bit register (TIME2OF) is used to keep track of timer overflows, this application has a range of 24 bits. This example application can time edges as far apart as about 3.3 seconds, and could easily be increased by adding additional overflow registers.

PETITIONER ECOBEE
EX. 1010

Edge Measurement Routine

```
EDGES    MOV  #02h,T2APC1         ;Set up T2AEVT pin as general-purpose input
                                  ; pin
         MOV  #22h,T2APC2         ;Enable T2AIC1/CR and T2AIC2/PWM pins.
         MOV  #8Bh,T2ACTL3        ;Select dual capture mode, enable rising
                                  ; edge of T2AIC1/CR and falling edge of
                                  ; T2AIC2/PWM to load the capture registers.
         MOV  #11h,T2ACTL1        ;Reset counter, enable T2A overflow
                                  ; interrupt.
         MOV  #06h,T2ACTL2        ;Clear flags, enable T2AIC1/CR and
                                  ;T2AIC2/PWM edges to cause interrupts.
         EINT
         ...
                                  ;T2A interrupt routine to follow.
T2AINTERR
         BTJO #80h,T2ACTL2,EDGE1 ;Jump on T2AIC1/CR rising edge?
         BTJO #40h,T2ACTL2,EDGE2 ;Jump on T2AIC2/PWM falling edge?
OVERFLOW INC  TIME2OF             ;Neither? Increment the TIME2OF overflow
                                  ; storage register (Timer bits 16–23).
         AND  #F6h,T2ACTL1        ;Clear overflow interrupt.
         RTI
EDGE2    MOV  T2AICL,TIME2L       ;Get 2nd capture latch value LSB and store
                                  ; it.
         MOV  T2AICM,TIME2M       ;Get 2nd capture latch value MSB and store
                                  ; it.
         BTJZ #08h,T2ACTL1,NOOVER;Was there an overflow just now?
         CMP  #0FFh,TIME2M        ;If overflow and pulse low, which came
                                  ; first?
         JEQ  NOOVER              ;If FFxxh, overflow happened after pulse
                                  ; low.
         INC  TIME20F             ;If 00xxh, overflow happened first,
                                  ; increment register.
         AND  #0F6h,T2ACTL1       ;Clear overflow interrupts.
NOOVER   MOV  #06h,T2ACTL2        ;Clear edge 2 interrupts and enable edge
                                  ; 1,2 interrupts.
         SUB  TIME1L,TIME2L       ;Get the difference between the two times.
         SBB  TIME1M,TIME2M       ;Store the difference in TIME2.
         SBB  #0,TIME2OF          ;Subtract any borrows from the overflows.
         RTI
EDGE1    AND  #62,T2ACTL2         ;Disable T2AIC1/CR interrupt untilT2AIC2/PWM
                                  ; edge occurs.
         CLR  TIME2OF             ;Reinitialize the TIME2OF overflow
                                  ; register.
         MOV  T2ACCL,TIME1L       ;Get 1st capture latch value LSB and store
                                  ; it.
         MOV  T2ACCM,TIME1M       ;Get 1st capture latch value MSB.
         RTI
```

NOTE: This code can work for T2A as well as T2B Timer Modules.

PETITIONER ECOBEE
EX. 1010

Output Pulse Generation (Delayed) Referenced to Input Signal

Output a 1-ms pulse 5 ms after the input signal goes high.

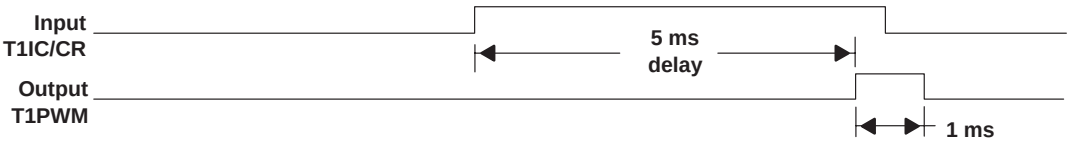

This program outputs a 1-ms pulse 5 ms after the input line goes high. This example uses T1 in the dual compare mode with the output toggle function of the T1IC/PWM pin. The program initializes the counter to look for the rising edge of the input signal on the T1IC/CR pin, and when it finds the edge, the program enters the interrupt service routine. The service routine checks to see if the interrupt was caused by the input rising or the output falling by checking the C1 flag. If the input rising caused the interrupt, the program quickly switches the clocking source from pulse accumulation to the system clock. If the input signal goes low before this switch is made, then the output pulse will be slightly delayed. After it switches the clock source, the routine enables the PWM to toggle at the 5- and 6-ms points, and also generates an interrupt when the C1 register toggles low at the 6-ms point. When the program enters the interrupt service routine again, it switches the clock back to the pulse accumulation mode and disables the PWM output toggling. The program then resets the timer to trigger only on the rising edge of the T1IC/CR input pin.

PETITIONER ECOBEE
EX. 1010

Delayed Output Pulse Generation Routine

```
                                ;Put 6 ms into C1 and 5 ms into C2.
                                ;Input pulse must remain high at least 9 µs.
                                ;Input = T1IC/CR output = T1PWM.
DELAY   MOV  #18h,T1CCM         ;Value to give 5 ms with 5-MHz SYSCLK
                                ; (1869h)
        MOV  #69h,T1CCL         ;Must load MSB first then LSB.
        MOV  #1Dh,T1CM          ;Value to give 6 ms with 20-MHz crystal
                                ; (1D45h)
        MOV  #45h,T1CL          ;Must load MSB first then LSB.
        MOV  #00h,T1PC1         ;T1EVT pin is set up as general-purpose
                                ; input.
        MOV  #22h,T1PC2         ;Enable the T1IC/CR and T1IC/PWM pins, and
                                ; initialize the T1IC/PWM pin to 0.
        MOV  #07h,T1CTL4        ;Select dual compare mode, look for rising
                                ; edge on T1IC/CR pin, and enable edge
                                ; detection.
        MOV  #04h,T1CTL3        ;Clear interrupts, and enable T1IC/CR edge
                                ; interrupts.
        MOV  #71h,T1CTL1        ;Setup WD, clock source=pulse
                                ; accumulator.
        MOV  #01h,T1CTL2        ;Reset the counter (could enable WD here).
       EINT
      ...
MAIN  ...                       ;Main routine goes here.
      ...
T1INTERR                        ;T1 interrupt routine to follow.
       BTJO  #20h,T1CTL3,ENDPUL ;Jump if at end of pulse (C1 flag=1).
       MOV   #70h,T1CTL1        ;Counter now clocked by system clock.
       MOV   #64h,T1CTL4        ;Enable PWM outputs, disable edge detect.
       MOV   #01h,T1CTL3        ;Clear flag, enable C1 to trigger at end.
       RTI
ENDPUL MOV   #71h,T1CTL1        ;Counter now clocked by pulse accumulations.
       MOV   #07h,T1CTL4        ;Re-enable edge interrupt, disable PWM
                                ; output.
       MOV   #04h,T1CTL3        ;Clear flag, enable C1 to trigger at end.
       RTI
```


PETITIONER ECOBEE
EX. 1010

Watchdog (WD) Operation and Initialization

A WD timer operates as a sentry to guard against improper program flow. Any time the WD is enabled to cause a system reset and then overflows without being reset by a proper value being written to the WDRST register, a system reset will occur. In other words, the program must write the proper values to the WDRST key register before the WD has a chance to time-out or the WD causes a system reset. This interaction between the program and the WD helps ensure program integrity. After the WD is enabled to reset the device, it can only be disabled by removing power from the part.

WD Initialization Example

To initialize the WD to generate a system reset, do the following:

1. Select the appropriate clock source and WD overflow tap select bits (T1CTL1.4, 5, 6, and 7).
2. Clear the WD OVRFL INT FLAG bit (T1CTL2.5). This bit must be cleared in order to receive WD-generated resets.
3. Set the WD OVRFL RST ENA bit (T1CTL2.7). Once this bit is set, only a power-up reset can clear it. For this condition to occur, V_{CC} must fall to somewhere around 1 V. The actual trip point depends on variables such as processing and temperature. The device stops working before the WD OVRFL RST ENA bit gets cleared. Also, once this bit is set, the following WD bits can not be altered until after a power-up reset:
   a. WD OVRFL INT ENA (T1CTL2.6)
   b. WD OVRFL INT FLAG (T1CTL2.5)
   c. WD OVRFL TAP SEL (T1CTL1.7)
   d. WD INPUT SELECT0–2 (T1CTL1.4–6)
   e. Write 55h to the WD RESET key register (WDRST) to enable a proper reset sequence.

PETITIONER ECOBEE
EX. 1010

There are conditions where the program will fail to work properly due to low V_{CC} levels and the WD will not catch the failure. Your system should incorporate circuitry to cause a RESET when V_{CC} is out of spec. (See Figure 11.)

If a reset occurs, the RESET subroutine needs to determine if the reset was caused by the WD or not by checking the WD OVRFL INT FLAG (T1CTL2.5). If the reset was caused by the WD, the WD OVRFL INT FLAG bit (T1CTL2.5) must be cleared in order to receive additional WD resets.

PETITIONER ECOBEE
EX. 1010

Figure 11. Typical Power-Up/Down Circuit

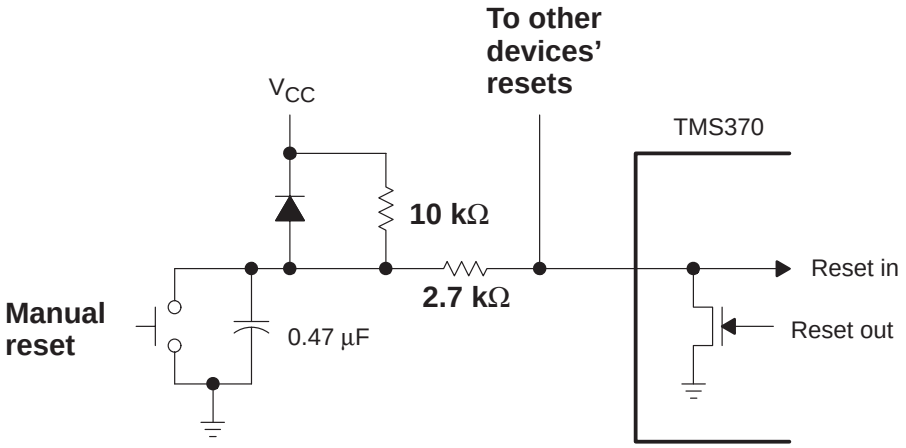

PETITIONER ECOBEE
EX. 1010

WD Reset Enable Initialization #1

This example can be used for those programs that always pass periodically through two or more points (see Figure 12) in the main program routine, but not interrupt service routines. In this example, the main program resets the WD at those points by writing immediate values directly to the WD reset register.

Figure 12. Two-Point Routine Operation

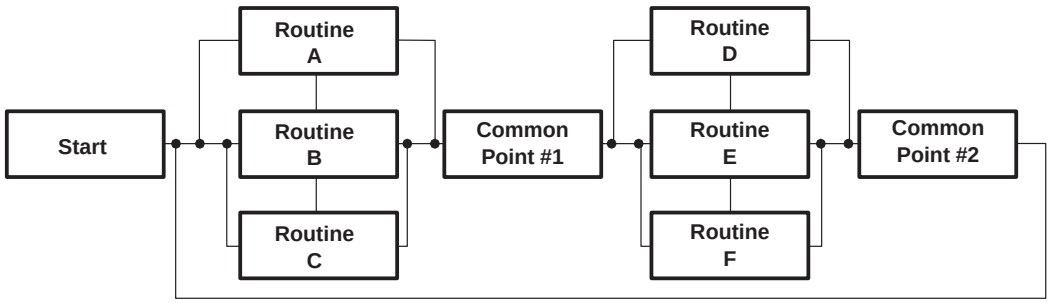

The WD overflow rate depends on the worst case time through the routines A, D, and C as well as D, E, and F. In this example, the WD is set to 16 bits in length and the full 8-bit prescale tap is used. If a reset occurs, the reset subroutine needs to determine if the reset was caused by the WD or not by checking the WD OVRFL INT FLAG (T1CTL2.5).

Routine

```
INITWD   MOV  #00h,P048          ;Reset the WD while in the general-purpose
                                 ; timer mode.
         MOV  #70h,P049          ;Select prescale according to program needs.
         MOV  #88h,P04A          ;Lock the WD in the WD reset mode.
MAIN1    ...
         MOV  #55h,P048          ;Must write a 55 first, and on odd writes
                                 ; (1,3,5,..).
         ...

MAIN2    ...
         MOV  #0AAh,P048         ;Must write an AA second, and on even writes
                                 ; (2,4,6,.).
         ...

                                 ;Was the reset caused by the WD or not?
                                 ;The following routine can be used to find
                                 ;out.

RESET    BTJZ  #20h,P04A,GPINIT  ;Is the WD flag set? If not
                                 ; go to GPINIT.
WDINIT   AND   #DFh,P04A         ;Clear the WD flag.
         MOV   #55h,P048         ;Reset the WD counter.
         ...
         ;Do any initialization here
         ...
         RTS
         ...
GPINIT   ;Power-up reset routine goes here.
         ...
         RTS
```


PETITIONER ECOBEE
EX. 1010

WD Reset Enable Initialization #2

This example can be used for those programs that have many paths through the main routine, but also contain a periodic interrupt service routine (ISR), as shown in Figure 13. Since a program could get lost in a continuous loop in either the main or interrupt routine, the WD routine should not be entirely contained in either one. For example, a program could get caught in a loop in the main or interrupt routines. The program may not be executing properly, but if the WDRST key register is written to correctly in the loop, the WD will not cause a reset. Therefore, it is best if you have two separate actions in your code that must operate properly so that the WD will NOT cause a system reset. If either one fails, a system reset will occur.

In this WD example, two separate actions are required so the WD routine will NOT cause a system reset:

1. The main program must clear a counter register (R4) before an interrupt routine occurs a set number of times (30 in this example). If the counter register is not cleared, the interrupt service writes an invalid data byte to the WDRST key register which causes a system reset.
2. A periodic interrupt routine must be entered before the WD completely times out, or a system reset will occur. Also, each time the interrupt routine is entered, the counter register (R4) is incremented once and compared to a set value (30 in this example). If the counter is ever incremented past 30, the interrupt routine writes an invalid data byte to the WDRST key register to cause a system register. Note that the only reason the counter register should ever get past 30 is if the main routine does not clear it.

Figure 13. One-Point Main Routine Plus Interrupt Operation

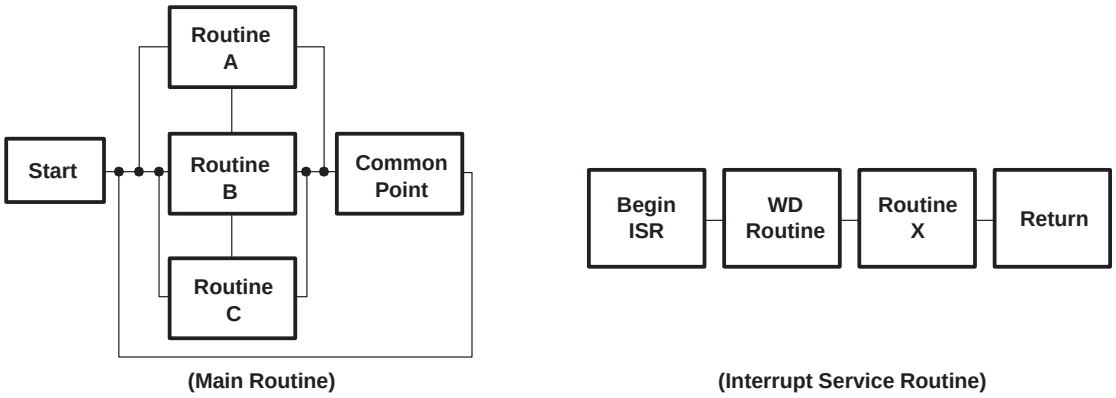

The WD is set to 16 bits in length and no prescale tap is used. If a reset occurs, the RESET subroutine needs to determine if the reset was caused by the WD or not (or by checking the WD OVRFL INT FLAG T1CTL2.5).

PETITIONER ECOBEE
EX. 1010

Routine

```
WDCOUNT .EQU  R4
WDSTORE .EQU  R5

        ; The following routine detects whether the reset was caused by the
        ; WD or not.

RESET   BTJZ  #20h,P04A,GPINIT ;Is the WD flag set? If NOT go to GPINIT.
WDINIT  AND   #0DFh,P04A       ;Clear the WD flag.
        ...

        ;Do any initialization here you desire specific to the WD.
        ...

GPINIT                         ;Power-up reset routine goes here.

        MOV   #00h,P048        ;Reset the WD while in the general-purpose
                               ; timer mode.
        MOV   #00h,P049        ;Select prescale according to program needs.
        MOV   #80h,P04A        ;Lock the WD in the WD reset mode.
                               ;Set up the register values used in the
                               ; following routine. R4 used as a counter,
        CLR   WDCOUNT          ; R5 used as the storage register for the next
        MOV   #0AAh,WDSTORE    ; write to WDRST.

MAIN    ...
        CLR   WDCOUNT          ;Clear the register before interrupt routine
        ...                    ; increments it past the value 30. The
                               ; register can be cleared at several points in
                               ; a program if necessary.

INTERR                         ;Interrupt routine.
        INC   WDCOUNT          ;Increment the counter register each interrupt
                               ; routine.
        CMP   #30,WDCOUNT      ;Has the counter register been incremented to
                               ; 30?
        JL    PETDOG           ;No, jump to PETDOG. Yes, write an invalid
        MOV   #00,P048         ; value to WDRST. This will cause a system
                               ; reset.

PETDOG  INV   WDSTORE          ;Everything OK, invert old value (AA to 55, or
        MOV   WDSTORE,P048     ; 55 to AA) then pet the watchdog to keep it
                               ; happy.
        ...
        RTI
```


PETITIONER ECOBEE
EX. 1010

WD Initialization When System Reset is Not Desired

If a program does not use the WD reset circuit, any erroneously enabled WD can generate a reset. If the program also clears the WD overflow interrupt flag, then the WD reset can continue to occur until a power-down.

If a program does not use the WD circuit, then take the following actions to avoid the continuous reset condition.

1. Assure the $\overline{\text{RESET}}$ pin is low during power up and oscillator start up.
2. Write x011xxxxb to T1CTL1 (P049) to halt clocking to the WD circuit.
3. Do not clear or write a zero to the WD overflow interrupt flag (P04A.5). Consider the read-modify-write actions of the AND and XOR instructions and use them with care at this address.

PETITIONER ECOBEE
EX. 1010

Specific Applications

This section describes sample routines for specific applications using the timer modules.

Stepper Motor Control

This application routine uses the T1 compare register to generate an interrupt which drives a stepper motor through the following series of activities:

1. Start stepping the motor at a desired minimum speed of approximately 92 rpm.
2. Accelerate the motor to a desired maximum speed of approximately 1378 rpm.
3. Decelerate the motor back to the minimum speed.
4. Change the motor rotation direction and repeat from step one.

Acceleration, deceleration, and change of direction are controlled by checking bits in the flag register. Bit 7 of flag is checked to determine the desired direction of rotation, while bit 0 is tested to see if the speed of rotation should be accelerated or decelerated. If bit 0 is a 1, then the speed needs to be decreased, and conversely if bit 0 is a 0, the speed needs to be increased.

The change of speed is accomplished by altering the value of the MSCOMP and LSCOMP working registers. Since the MSCOMP:LSCOMP register pair is continually loaded into the T1 compare register during the algorithm, any changes to the these registers between writes to the compare register will cause the compare equal interrupt period to change. If the value of the MSCOMP:LSCOMP register pair decreases, the T1 interrupt period decreases and the motor steps faster. If the value of the MSCOMP:LSCOMP register pair increases, the T1 interrupt period increases and the motor steps slower. Change of direction is accomplished at the minimum desired speed, and is completed by altering bit 7 in the flag register.

The hardware circuitry required for this application includes any TMS370 microcontroller with the T1 module, two SN75603 chips and two SN75604 driver chips, and the stepper motor. The SN75603/4 driver chips are power peripherals with three-state outputs having the capability to sink or source currents up to 2 A. Other driver chips may be used in this application. The stepper motor used in this application is configured with four stator poles and 25 permanent magnet rotor poles. One hundred steps are required to complete one revolution of the rotor, each step being 3.6 degrees. V_{CC} for the driver chips depends on the stepper motor which is rated at 1 A at 20 V.

The schematic for the application is shown in Figure 14.

PETITIONER ECOBEE
EX. 1010

Figure 14. Stepper Motor Drive Application Schematic

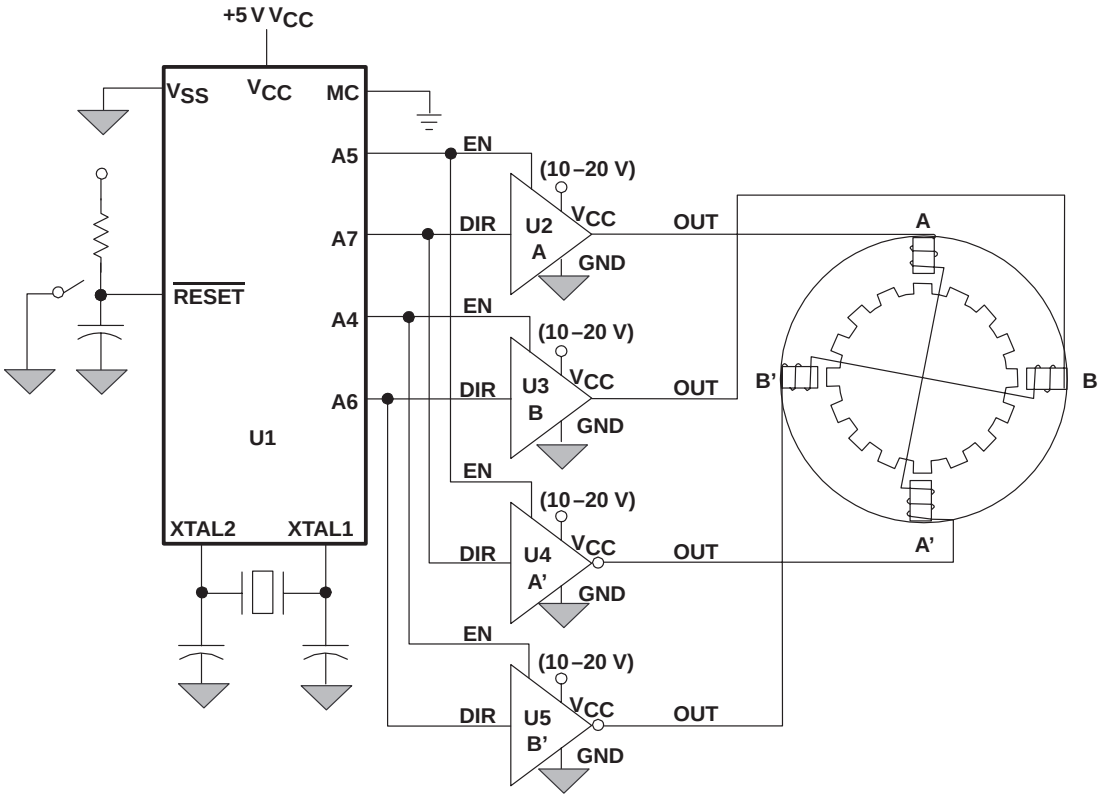

U1 = TMS370 Family Microcontroller
U2, U3 = SN75603 Peripheral Drivers
U4, U5 = SN75604 Peripheral Drivers

PETITIONER ECOBEE
EX. 1010

The flowchart for the stepper motor application is shown in Figure 15.

Figure 15. Stepper Motor Control Application Flowchart

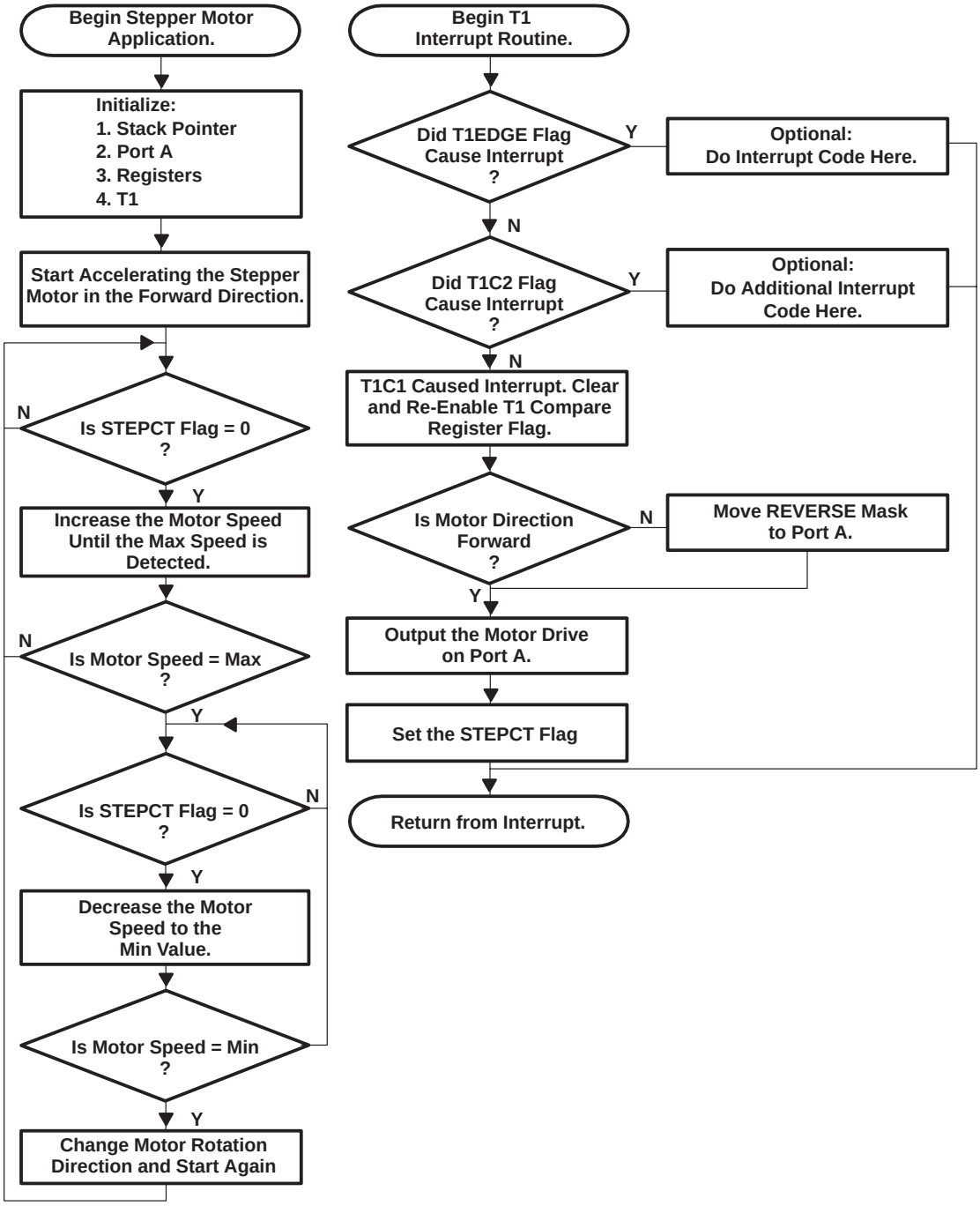

PETITIONER ECOBEE
EX. 1010

Stepper Motor Routine

```
         .title "Stepper Motor Control"

;        Allocate register space for the four registers used in the routine.

MSCOMP   .equ   R5            ;Working registers for new values for
LSCOMP   .equ   R6            ; the T1 compare register.
FLAG     .equ   R7            ;Register tellS if acceleration or
                              ; deceleration routine is to be used (bit 0),
                              ; and what direction to operate (bit 7).
STEPCT   .equ   R8            ;Used to signal a complete write cycle to the
                              ; 4 motor poles. (Write cycle rev counter.)

;     Set up Equate table for peripheral file registers used in routine.

APORT2n  .equ   P021          ;Port A control register
ADATA    .equ   P022          ;Port A data register
ADIR     .equ   P023          ;Port A data direction register
T1CM     .equ   P042          ;T1 compare register 1 (MSB)
T1CL     .equ   P043          ;T1 compare register 1 (LSB)
T1PC1    .equ   P04D          ;T1 port control register 1
T1PC2    .equ   P04E          ;T1 port control register 2
T1CTL1   .equ   P049          ;T1 control register 1
T1CTL2   .equ   P04A          ;T1 control register 2
T1CTL3   .equ   P04B          ;T1 control register 3
T1CTL4   .equ   P04C          ;T1 control register 4
T1PRI    .equ   P04F          ;T1 priority control register

         .text  7000h

;         Begin initialization:
;
;         Set up stack pointer to begin at R10.
;         Use MS nibble of Port A as the stepper motor drive port.
;         Initialize registers to their start values.
;         Initialize T1 operation.

START     MOV   #10,B         ;Initialize the stack pointer to begin at
          LDSP                ; register 10.
          MOV   #00h,APORT2n  ;Set up port A MS nibble to be used as the
                              ; 4 pole stepper motor drive port.
          MOV   #00h,ADATA    ;Initialize data = 00.
          MOV   #0F0h,ADIR    ;Direction: A7=A6=A5=A4=OUT, A3=A2=Al=A0=IN
                              ;REGISTERS:
          MOV   #080h,MSCOMP  ;  MSCOMP = 80h MSCOMP&gm1.LSCOMP = 08000h)
          MOV   #000h,LSCOMP  ;  LSCOMP = 00h
          CLR   STEPCT        ;  STEPCT = 0
          CLR   FLAG          ;  FLAG   = 0
          MOV   #04h,B        ;  B      = 4, (optional) Used only to count
                              ;  complete write cycles to the 4 motor poles.
                              ;  Could add additional code in the T1
                              ;  interrupt service routine to count
                              ;  revolutions.
```


PETITIONER ECOBEE
EX. 1010

```
;         Initialize the T1 module.

INTPGM    MOV #080h,T1CM            ;Value to give minimum speed (rpm) using a
          MOV #00h,T1CL             ; 20-MHz crystal. Must load the MS byte
                                    ; first then the LS byte.
          MOV #00000000b,T1PC1      ;T1EVT, T1PWM, AND T1IC/CR pins are set to
          MOV #00000000b,T1PC2      ; general-purpose input pins.
          MOV #00010000b,T1CTL4     ;Select dual compare mode and cause T1 to
                                    ; reset on compare equal.
          MOV #01110000b,T1CTL1     ;Select the system clock as timer clock
                                    ; source and leave the WD unchanged.
          MOV #00000111b,T1CTL3     ;Clear any pending interrupt flags, and
                                    ; allow the compare 1, compare 2, or
                                    ; T1EDGE interrupt flag to cause the T1
                                    ; interrupt.
                                    ; (Optional) Only compare 1 interrupt is
                                    ; required.
          MOV #00000001b,T1CTL2     ;Reset the counter (could enable WD here).
          MOV #00000000b,T1PRI      ;Set the T1 interrupt priority to level 1.

          EINT                      ;Allow interrupts to the main routine.

;         Begin main program: Accelerate and decelerate the stepper motor by
;         changing the value in the T1 compare register. Also, change
;         direction when the minimum speed has occurred.

FASTER    BTJZ #01,STEPCT,FASTER    ;Execute acceleration program here.
          CLR  STEPCT               ;Clear the STEPCT rev counter register.
          INCW #-80h,LSCOMP         ;Decrease the STORE register pair by 80h
          BTJO #0F7h,MSCOMP,UPDATE  ;Has the maximum desired speed been
                                    ; reached?
                                    ; (True when (MSCOMP:LSCOMP) = 0880h)
                                    ; No, update the T1 compare register.
          INC  FLAG                 ; Yes, set the ACCEL/DECEL bit in FLAG.
UPDATE    MOV  MSCOMP,T1CM          ;Update the T1 compare register with
          MOV  LSCOMP,T1CL          ; the values in the MSCOMP and LSCOMP
                                    ; registers.
          BTJO #01h,FLAG,SLOWER     ;If ACCEL/DECEL bit is set jump to SLOWER,
          JMP  FASTER               ; if not, jump to SPEEDUP.
SLOWER    BTJZ #01,STEPCT,SLOWER    ;Execute deceleration program here.
          CLR  STEPCT               ;Clear the STEPCT rev counter register.
          ADD  #80h,LSCOMP          ;Increase the STORE register pair by 80h.
          ADC  #00,MSCOMP
          BTJZ #80h,MSCOMP,UPDATE   ;Has the minimum desired speed been
                                    ; reached?
                                    ; (True when (MSCOMP:LSCOMP) = 08000h)
                                    ; No, update the T1 compare register.
CLRFLG    XOR  #81h,FLAG            ; Yes, clear the ACCEL/DECEL bit and
                                    ; change the DIRECTION bit.
          JMP  UPDATE               ;Update the T1 compare register.
```


PETITIONER ECOBEE
EX. 1010

```
;         T1 interrupt service routine: Routine will first check to see which
;         of three possible flags caused the interrupt, and jump to the
;         correct routine. If the T1C1 flag (compare register 1) is set, the
;         STPMTR routine is entered. This routine loads the motor pole
;         drivers with a value that causes the motor to accelerate or
;         decelerate in either the forward or reverse direction, depending on
;         the values of the ACCEL/DECEL and DIRECTION bits in the FLAG
;         register.
T1INT      BTJO  #80h,T1CTL3,EDGE   ;Check to see if the T1 EDGE flag caused
                                    ; interrupt.
           BTJO  #40h,T1CTL3,CAPCMP ; No, check the T1C2 flag.
                                    ; No, must have been the T1C1 flag.
STPMTR     MOV   #11000111b,T1CTL3  ;Clear the T1C1 interrupt flag, reenable
                                    ; all interrupts.
                                    ;Execute interrupt code.
           BTJZ  #80h,FLAG,FORWRD   ;Is DIRECTION bit clear? Yes, then jump
                                    ; to the FORWRD routine. No, continue.
           MOV   *REV–1[B],A        ;Move the appropriate motor pole mask
           JMP   LOAD               ; into the port A data register (reverse
                                    ; direction).
FORWRD     MOV   *DRIVE–1[B],A      ;Move the appropriate motor pole mask
LOAD       MOV   A,ADATA            ; into the port A data register (forward
                                    ; direction).
           DJNZ  B,FINIS            ;(Optional) Decrement the cycle register
           MOV   #04,B              ; count and reload with 4 if zero.
SETREV     INC   STEPCT             ;Set the STEPCT rev counter register.
FINIS      RTI                      ;Return to the main routine.

EDGE
           MOV   #01100111b,T1CTL3  ;Clear the T1IC/CR interrupt flag,
                                    ; reenable all interrupts
                                    ;Execute interrupt code.
;          An interrupt routine for a valid signal on the T1IC/CR pin can go
;          here.
           RTI                      ;Return to main routine.

CAPCMP
           MOV   #0100111b,T1CTL3   ;Clear the T1C2 interrupt flag, reenable
                                    ; all interrupts.
                                    ;Execute interrupt code.
;          An interrupt routine for a capture/compare register equal can go
;          here.
            RTI                     ;Return to main routine.

           .data 7E00h
DRIVE      .byte 00010000b          ;A=B=0, A'=B'=1, only B and B' poles
                                    ; enabled.
           .byte 00100000b          ;A=B=0, A'=B'=1, only A and A' poles
                                    ; enabled.

           .byte 11010000b          ;A=B=1, A'=B'=0, only B and B' poles
                                    ; enabled.
           .byte 11100000b          ;A=B=1, A'=B'=0, only B and B' poles
                                    ; enabled.
REV        .byte 11100000b          ;A=B=1, A'=B'=0, only B and B' poles
                                    ; enabled.
           .byte 11010000b          ;A=B=1, A'=B'=0, only B and B' poles
                                    ; enabled.
           .byte 00100000b          ;A=B=0, A'=B'=1, only A and A' poles
                                    ; enabled.
           .byte 00010000b          ;A=B=0, A'=B'=1, only B and B' poles
                                    ; enabled.

           .sect "VECTOR",7FF4h
           .word T1INT              ;Location for the T1 interrupt routine.
```


PETITIONER ECOBEE
EX. 1010

```
.word START              ;  All other interrupt vectors point to
.word START              ;  the reset vector.
.word START
.word START
.word START
.end
```


PETITIONER ECOBEE
EX. 1010

Time-of-Day Clock Application Routine

This application routine uses the T1 compare register to generate an interrupt service routine every 1/10 second (100 ms), which will be used to update a time-of-day clock. The value required by the compare register to generate a 100-ms interrupt period with a 5-MHz SYSCLK is 07A11h . See page 217 for formula and look-up table.

The application software uses five registers to keep track of hours, minutes, seconds, tenths of seconds, and an AM/PM mode flag. Additional code and circuitry may be added for external time setting control and calendar application requirements. See page 258.

The flowchart for the application is shown in Figure 16.

PETITIONER ECOBEE
EX. 1010

Figure 16. Flowchart for Time-of-Day Clock Application

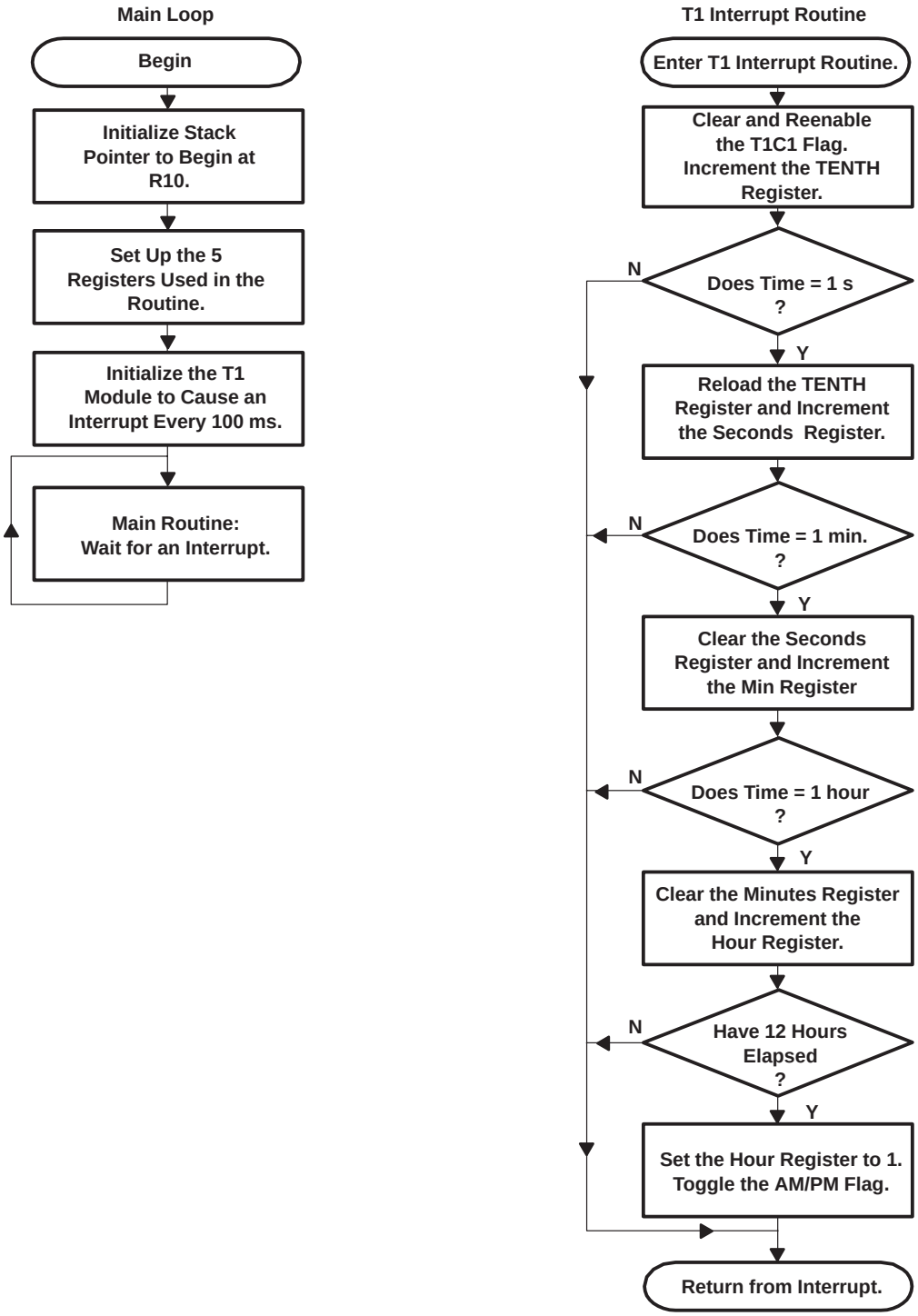

PETITIONER ECOBEE
EX. 1010

Time-of-Day Routine

```
        .title     "Time-of-Day Clock"

;       This routine will use T1 in the dual compare mode to implement a
;       real-time 12-hour clock (with AM/PM flag) down to tenths of seconds.

;       Allocate register space for the five registers used in the
;       application routine.


AMPM    .equ  R5         ;AM/PM flag register
HOUR    .equ  R6         ;HOUR register
MIN     .equ  R7         ;MIN register
SEC     .equ  R8         ;SEC register
TENTH   .equ  R9         ;Register used to count 10 – 1/10 second
                         ; T1C1 interrupts. (Required only to increase
                         ; accuracy of clock.)

;        Set up Equate table for peripheral file registers which will be
;        used in the routine.

T1CM    .EQU  P042       ;T1C1 register (MSB)
T1CL    .EQU  P043       ;T1C1 register (LSB)
T1PC1   .EQU  P04D       ;T1 port control register 1
T1PC2   .EQU  P04E       ;T1 port control register 2
T1CTL1  .EQU  P049       ;T1 control register 1
T1CTL2  .EQU  P04A       ;T1 control register 2
T1CTL3  .EQU  P04B       ;T1 control register 3
T1CTL4  .EQU  P04C       ;T1 control register 4
T1PRI   .EQU  P04F       ;T1 interrupt priority register


        .text 7000h

;        Begin initialization:
;

;        Set up stack pointer to begin at R10.
;        Initialize registers to their Start value (12:00 A.M.).
;        Initialize the T1 operation.

BEGIN   MOV  #10,B       ;Initialize the stack pointer to begin at
        LDSP             ; register 10.
```


PETITIONER ECOBEE
EX. 1010

```
;       Initialize the clock registers to 12:00 a.m.

        CLR  SEC          ;Initialize SEC register to 00.
        CLR  MIN          ;Initialize MIN register to 00.
        MOV  #12h,HOUR    ;Initialize HOUR register to 12.
        MOV  #00,AMPM     ;Initialize AMPM. 0 = AM, 1 = PM
        MOV  #0Ah,TENTH   ;Initialize TENTH register with 10.
        MOV  #00,T1PRI    ;Set T1 priority for level 1.
        MOV  #7Ah,T1CM    ;Move 07A11h into the T1C1 register
        MOV  #11h,T1CL    ; MSB first.
        MOV  #00h,T1PC1   ;Initialize all T1EVT, T1PWM, and T1IC/CR
        MOV  #00h,T1PC2   ; to general-purpose inputs.
        MOV  #l0h,T1CTL4  ;Select dual compare register mode and
                          ; allow C1 register to reset timer.
        MOV  #05h,T1CTL1  ;Choose the /16 prescale tap for T1.
        MOV  #01h,T1CTL3  ;Clear flags, enable only the T1C1 flag
                          ; to cause an interrupt. Other timer flags
                          ; may be enabled if desired.
        MOV  #01h,T1CTL2  ;Disable WD, reset T1.
        EINT              ;Allow interrupts to the main program.

;       Begin your main routine here. (The jump loop shown is for
;       demonstration only.)

MAIN    JMP  MAIN

;       T1C1 interrupt service routine to follow.

T1INT   MOV  #01h,T1CTL3  ;Clear the C1 flag.
        DJNZ TENTH,END    ;Check to see if a second has gone by, if
        MOV  #0Ah,TENTH   ; not, RTI, if so, continue routine.
        DAC  #01,SEC      ;Add a decimal 1 to SEC then see if
        CMP  #060h,SEC    ; 60 seconds have elapsed.
        JNE  END          ; If not, return to main program.
        CLR  SEC          ; If so, clear SEC then,
        DAC  #01,MIN      ;Add a decimal 1 to MIN. See if
        CMP  #060h,MIN    ; 60 minutes have elapsed.
        JNE  END          ; If not, return to main program.
        CLR  MIN          ; If so, clear MIN then,
        DAC  #01,HOUR     ;Add a decimal 1 to HOUR. See if
        CMP  #013h,HOUR   ; 13 hours have elapsed.
        JNE  END          ; If not, return to the main program.
        MOV  #01,HOUR     ; If so, set the HOUR register to 1,
        XOR  #01,AMPM     ; and toggle the AM/PM flag bit.
END     RTI               ;Return to the main program.

       .sect "VECTOR",7FF4h
       .word T1INT        ;Location of the T1 interrupt vector.
       .word BEGIN        ;All other vectors jump to BEGIN.
       .word BEGIN
       .word BEGIN
       .word BEGIN
       .word BEGIN
       .end
```


PETITIONER ECOBEE
EX. 1010

Optional Calendar Functions for the Time-of-Day (TOD) Clock

This code could be substituted for the T1 interrupt service routine of the previous example to give a TOD clock which keeps track of days, months, and years including leap years. To implement these functions, you need to replace the register equates, the T1 interrupt service routine, and the value of the stack pointer. Also, the new registers need to be initialized, the previous register references deleted, and three look-up tables added. The T1 initialization and peripheral file equates remain the same, since this routine uses the same 1/10th second interrupt time base as the previous routine.

The new code blocks required for the calendar functions are as follows:

1) New register equate values:

```
TIME        .equ R4
;           R4 = TENTH          0
;           R5 = SECONDS        1
;           R6 = MINUTES        2
;           R7 = HOURS          3
;           R8 = DAYS           4
;           R9 = MONTH          5
;           R10= YEAR           6
MONTH       .equ    R9
YEAR        .equ    R10
YEAR100     .equ    R11         ;Century FLAG register. Incremented on
                                ;  100-year intervals.
```

2) New stack pointer value and register initialization.

```
START       MOV    #l2, B      ;The stack needs to start at #12
            LDSP                ; or greater.

            CLR    TIME            ;Clear TENTHS
            CLR    TIME+l          ;Clear SECONDS
            CLR    TIME+2          ;Clear MINUTES
            CLR    TIME+3          ;Clear HOURS
            MOV    #1,TIME+4       ;Set DAYS to 1.
            MOV    #l,TIME+5       ;Set MONTHS to 1.
            MOV    #89,TIME+6      ;Set YEARS to 1989.
            CLR    TIME+7          ;Clear the century flag register.
```

3) New Timer 1 Interrupt Service Routine:

```
T1INT       PUSH   A            ;Save the A and B registers if
                                ; necessary.
            PUSH   B
            CLR    B            ;Start index at TENTHS.
LOOP        MOV    *TIME[B],A   ;Get the value of the present time
                                ; unit.

            CMP    #4,B         ;Are we checking DAYS?
            JEQ    DOMONTH      ; If so, special check for months
            CMP    *MAX[B],A    ;If not, has the MAX value of this time
                                ;  unit been met yet?

            JLO    DONE         ;If not then exit.

NEXT        MOV    *MIN[B],A    ;Replace the value the time unit with
            MOV    A,*TIME[B]   ; its minimum value.
            CMP    #6,B         ;Are we at the end of the century yet?
            JNE    NXTUNIT      ;If not, continue incrementing B.
            INC    YEAR100      ;If so, increment the century flag
                                ; register.
            JMP    LOOP
NXTUNIT     INC    B            ;Point to next higher time unit.
            JMP    LOOP         ;Jump to loop.
```


PETITIONER ECOBEE
EX. 1010

```
RESTOREB POP    B                       ;Restore B with time unit
                                        ; count.
DONE     INC    A                       ;Increment the present time
                                        ; unit.
         MOV    A,*TIME[B]
         POP    B                       ;Restore B and A then exit.
         POP    A
         RTI                            ;Return from interrupt.

DOMONTH  PUSH   B                       ;M O N T H S
         MOV    MONTH,B                 ;Get the value of the MONTH
                                        ; register.
         CMP    #2,B                    ;Is it Feb? If not jump to
                                        ; NORMAL.
         JNE    NORMAL
         BTJO   #3,YEAR,NORMAL          ;If it is Feb, check for a leap
                                        ; year (leap years end with
                                        ; 00b).
                                        ;If not leap year jump to
                                        ; NORMAL.

         CMP    #28+1,A                 ;If leap year is it Feb. 29th
                                        ; yet?
         JMP    DODAYS

NORMAL   CMP    *DAYS-1[B],A            ;If month is not Feb, is it
                                        ; maxed out yet?
DODAYS   JLO    RESTOREB                ;If not, restore index and go
                                        ; to DONE.

DONEMON  POP    B                       ;If so, restore index and go to
                                        ; NEXT.
         JMP    NEXT                    ;Exit to next time unit
```

4) New look-up tables required for routine:

```
MAX      .BYTE   09,59,59,23,31,12,99 ;Maximim values for TENTH,
                                      ; SECOND, MINUTE, HOUR, DAY,
                                      ; MONTH, and YEAR.
MIN      .BYTE   00,00,00,00,01,01,00 ;Minimum values for TENTH,
                                      ; SECOND, MINUTE, HOUR, DAY,
                                      ; MONTH, and YEAR.
DAYS     .BYTE   31,28,31,30,31,30    ;Maximum days in each month.
         .BYTE   31,31,30,31,30,31
```


PETITIONER ECOBEE
EX. 1010

Frequency Counter Application

This routine uses the T1 module in a frequency counter application. The frequency is calculated by keeping track of the number of pulses for one second. The pulse count is input on the T1IC/CR pin, and the T1 compare register is set up to give a one-second interrupt. The value required by the compare register to generate a one-second interrupt period with a 5-MHz SYSCLK is 04C4Ah with a /256 prescale. See page 217 for formula and look-up table. This counter application is designed to measure an input signal from 1 Hz to approximately 60 kHz.

A series of three registers keeps a decimal count of the number of pulses seen on the T1IC/CR pin until the compare equal interrupt is detected. After each T1 compare equal interrupt, the values in the COUNTX registers are loaded into the STOREX registers for use by your program. The COUNTX registers are then cleared and ready to keep count of any pulses during the next second.

PETITIONER ECOBEE
EX. 1010

Frequency Counter Routine

```
        .title   "Frequency Counter";accurate to approx 60 kHz

;        Allocate space for the seven registers used in the routine.
COUNTH   .equ  R2                  ;The COUNTX registers are used to keep
COUNTM   .equ  R3                  ; track of the external pulses on the
COUNTL   .equ  R4                  ; T1IC/CR pin. They are incremented for
                                   ; each pulse.
STOREH   .equ  R5                  ;The program uses the STOREX registers to
STOREM   .equ  R6                  ; keep, a record of the last frequency
STOREL   .equ  R7                  ; count. These registers are updated
                                   ; every second.
ERROR    .equ  R8                  ;(Optional, not used by program) This
                                   ; register is provided to signal the
                                   ; program if an invalid frequency is
                                   ; detected. (Overflow out of the COUNTH
                                   ; register)

;        Set up Equate table for peripheral file registers used in routine.

T1CM     .equ  P042                ;T1 compare register 1 (MSB)
T1CL     .equ  P043                ;T1 compare register 1 (LSB)
T1CTL1   .equ  P049                ;T1 control register 1
T1CTL2   .equ  P04A                ;T1 control register 2
T1CTL3   .equ  P04B                ;T1 control register 3

T1CTL4   .equ  P04C                ;T1 control register 4
T1PC1    .equ  P04D                ;T1 port control register 1
T1PC2    .equ  P04E                ;T1 port control register 2
T1PRI    .equ  P00F                ;T1 priority control register

;        Begin initialization:
;

;        Set up stack pointer to begin at R10.
;        Initialize registers to their start values.
;        Initialize T1 operation.

         .text 7000h               ;Program start location

START     MOV #10,B                ;Initialize the stack pointer to begin at
          LDSP                     ; register 10.

          CLR  COUNTL              ;Initialize the registers used in this
          CLR  COUNTM              ; routine to zero.
          CLR  COUNTH
          CLR  STOREL
          CLR  STOREM
          CLR  STOREH
          CLR  ERROR

          MOV  #4Ch,T1CM           ;Load the T1 compare register with
          MOV  #4Ah,T1CL           ; #04C4Ah (MSB first) to give a 1 s
                                   ; compare.
          MOV  #00h,T1PC1          ;T1EVT and T1PWM are general-purpose
                                   ; input pins
          MOV  #02h,T1PC2          ;Enable T1IC/CR.
          MOV  #11h,T1CTL4         ;Select dual compare mode, enable falling
                                   ; edge and detect enable of T2nIC1/CR.
          MOV  #07h,T1CTL1         ;Select the /256 prescale value.
          MOV  #00h,T1PRI          ;Set up interrupt priority as level 1.
          MOV  #01h,T1CTL2         ;Reset counter.
          MOV  #05h,T1CTL3         ;Clear flags, enable T1IC/CR and the
                                   ; capture register to cause interrupts.
          EINT                     ;Globally enable interrupts.
```


PETITIONER ECOBEE
EX. 1010

```
;     Begin your main program here. A simple jump/loop routine is used in
;     this application.

MAIN      JWP  MAIN             ;Loop on self while waiting for interrupt.


;     T1 interrupt service routine: Routine first checks to see which of the
;     two enabled T1 interrupt sources caused the interrupt. If the T1C1 flag
;     (compare register 1) is set, the service routine jumps to SAVE and
loads
;     the contents of the COUNTX registers into the STOREX registers,
;     reinitializes the COUNTX registers to zero, then resets the timer. If
;     the T1EDGE flag (T1IC/CR pin) is set, the service routine increments
;     the COUNTX registers.

T1INT     BJTO #20h,T1CTL3,SAVE ;Did T1 compare register cause the T1
                                ; interrupt? Yes, jump to SAVE.
          MOV  #65h,T1CTL3      ; No, clear the T1IC/CR pin flag.
          MOV  #11h,T1CTL4      ;Reenable falling edge and detect enable of
                                ; T2nIC1/CR.
LOW       DAC  #l,COUNTL        ;Increment the pulse count register COUNTL.
          JC   MID              ;If the low count register does not roll
          RTI                   ; over, (carry = 0) then return to the main
                                ; program.
MID       DAC  #0,COUNTM        ;If carry = 1, then COUNTM = <COUNTM> + 1.
          JC   HIGH             ;If the mid count register does not roll
          RTI                   ; over, (C=0), then return to the main
                                ; program.
HIGH      DAC  #0,COUNTH        ;If carry = 1, then COUNTH = <COUNTH> + 1.
          JNC  RETURN           ;(Optional) If the high count register rolls
          MOV  #0FFh,ERROR      ; over, set the ERROR register.
RETURN    RTI                   ;Return to the main program.

SAVE      MOV  COUNTL,STOREL    ;Save the contents of the present pulse
          MOV  COUNTM,STOREM    ; counter registers into the
                                ; STOREH:STOREM:STOREL registers.
          MOV  COUNTH,STOREH
          CLR  COUNTL           ;Clear the contents of the pulse counter
                                ; registers.
          CLR  COUNTM
          CLR  COUNTH
          MOV  #0C5h,T1CTL3     ;Clear the T1C1 flag. Keep interrupts
                                ; enabled.

;      Code could be added here to use the frequency count data. For example,
;      you could use the SPI port to send the data to your display.

          MOV  #01,T1CTL2       ;Reset the timer.
DONE      RTI                   ;Return to the main program.

         .sect "VECTOR",7FF4h
         .word T1INT            ;Set the T1 interrupt vector to T1INT.
         .word START            ;All other vectors point to the reset
                                ; vector.
         .word START
         .word START
         .word START
         .word START
         .end
```


PETITIONER ECOBEE
EX. 1010

Display Dimming Application Routine

Output a PWM signal with a varying duty cycle to control the brightness of a display. (VF, LED, etc.)

The schematic for this application is as follows:

Figure 17. Display Dimming Application

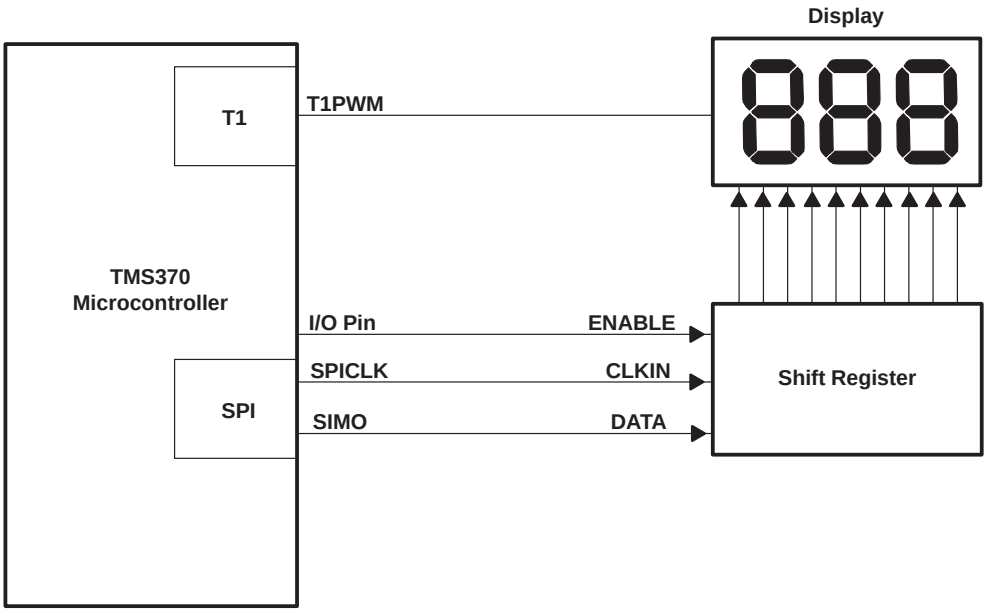

This application requires a PWM signal with a duty cycle which can vary from 0% to 100%. The resolution of the signal is 0.5% (200 steps from 0% to 100%). The T1 module is used in this example, but T2n may be used in a similar manner for those devices which contain T2n. Only the dimming function is covered in this application. The SPI interface is illustrated in *Using the TMS370 SPI and SCI Modules Application Report* (SPNA006).

Figure 18. Display Dimming PWM Signal

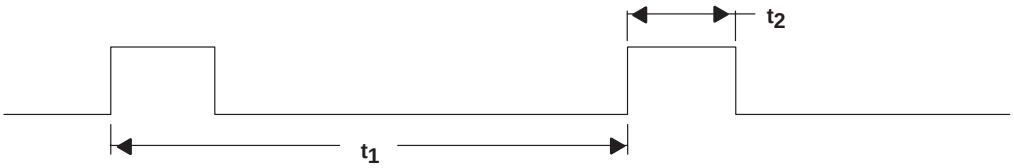

In this PWM application, the pulse width duty cycle (t_2) may be changed under program control by altering the value in the capture/compare register. The compare register controls the period of the signal (t_1) and is not changed in this routine.

PETITIONER ECOBEE
EX. 1010

The main program loads any new values for the PWM duty cycle into the MS/LSDATA working registers. These values are checked against the latest values in the HI/LODUTY registers. If they are different, the HI/LODUTY registers are updated, and the MAIN loop compares to see if the new value is 0% or 100%. If so, the PWM pin is set either LO or HIGH. If the new value is not 0% or 100%, the T1 interrupt service routine is enabled, and on the next interrupt, the PWM duty cycle changes.

When the T1 service routine is entered, the routine stops the PWM signal, loads the new values, and restarts. Stopping the PWM signal helps avoid the possibility of inverting the signal if the new value is larger than the old; for example, when changing from a 20% to a 30% duty cycle signal.

The program flowchart diagram for this routine is illustrated in Figure 19.

PETITIONER ECOBEE
EX. 1010

Figure 19. Display Dimming Flowchart

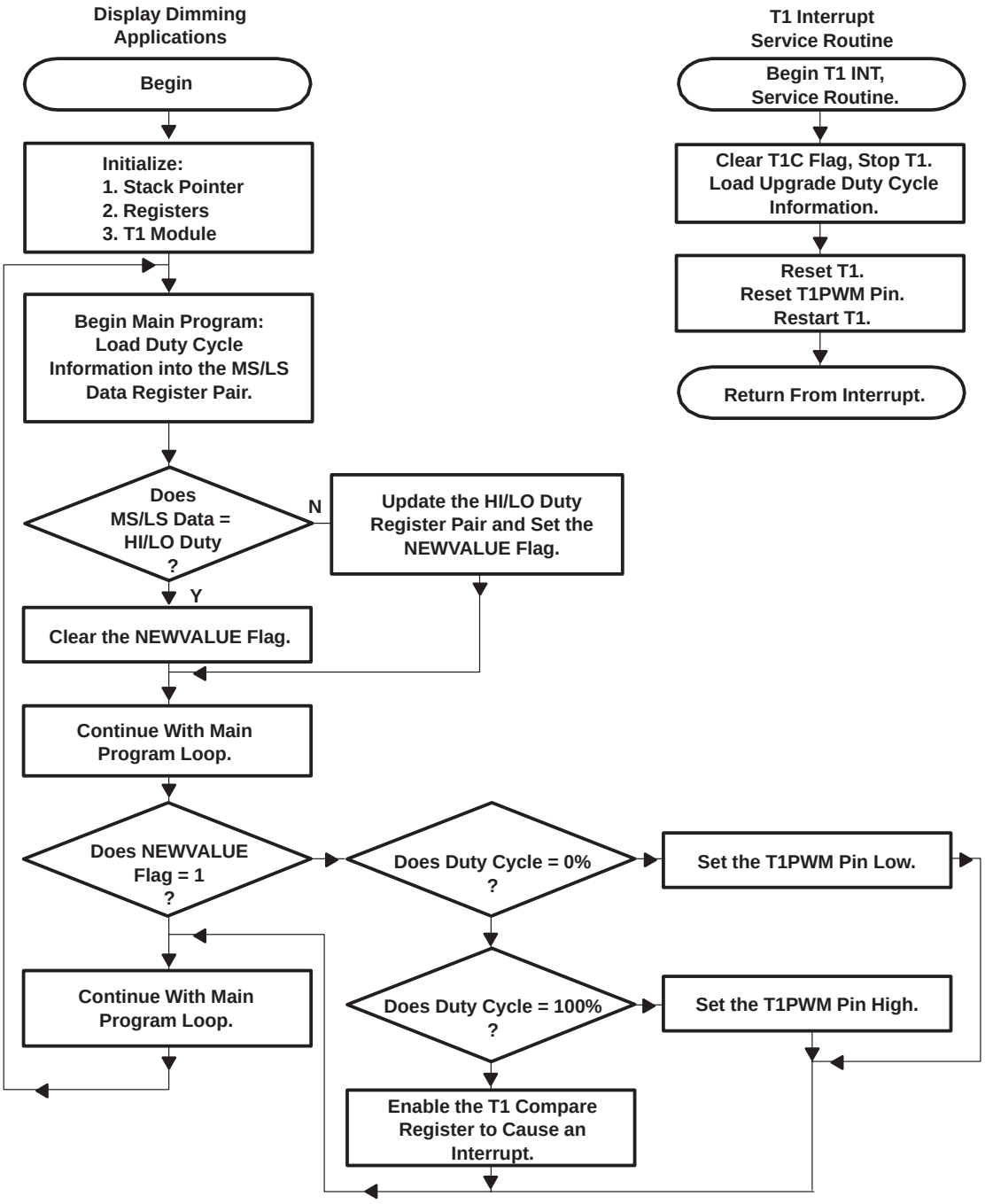

PETITIONER ECOBEE
EX. 1010

Display Dimming Routine

```
         .title   "Display Dimming Function"
         .text 7000h

;        Allocate register space for the five registers used in the
;        application routine.

HIDUTY   .equ  R2             ;Register used to store MSB of any new
                              ; duty cycle value.
LODUTY   .equ  R3             ;Register used to store LSB of any new
                              ;  duty cycle value.
MSDATA   .equ  R4             ;Working registers where duty cycle information
LSDATA   .equ  R5             ; is stored before the main program loads it
                              ; into the HI/LODUTY registers.
FLAGS    .equ  R6             ;Register used to store any software flags.

NEWVALUE .dbit 0,FLAGS        ;Flag used to trigger a new PWM duty cycle.
                              ; (Bit 0 of the FLAGS register is used.)

;        Set up Equate table for peripheral file registers which are used
;        in the routine.

T1CM     .EQU  P042           ;T1C1 register (MSB)
T1CL     .EQU  P043           ;T1C1 register (LSB)
T1CCM    .EQU  P044           ;T1 compare/compare 2 register (MSB)
T1CCL    .EQU  P045           ;T1 capture/compare 2 register (LSB)
T1PC1    .EQU  P04D           ;T1 port control register 1
T1PC2    .EQU  P04E           ;T1 port control register 2
T1CTL1   .EQU  P049           ;T1 control register 1
T1CTL2   .EQU  P04A           ;T1 control register 2
T1CTL3   .EQU  P04B           ;T1 control register 3
T1CTL4   .EQU  P04C           ;T1 control register 4
T1PRI    .EQU  P04F           ;T1 interrupt priority register

;         Begin initialization:

;         Set up stack pointer to begin at R050.
;         Initialize registers to their START values.
;         Initialize the T1 operation.

START     MOV  #50h,B         ;Initialize the stack pointer to start at
          LDSP                ; register R050.

RESET     CLR  HIDUTY         ;Clear all registers. The duty cycle of the
          CLR  LODUTY         ; PWM signal is initialized to 0%.
          CLR  MSDATA
          CLR  LSDATA
          CLR  FLAGS
```


PETITIONER ECOBEE
EX. 1010

```
;         Initialize the T1 module

T1INIT    MOV   #04Eh,T1CM        ;Set up the T1 compare register to contain
          MOV   #020h,T1CL        ; (4E20h). PWM frequency = 250 Hz. (The
                                  ; actual frequency is not very important
                                  ; But should be > 100 Hz.)
                                  ; Must load MSB first then LSB.

          MOV   HIDUTY,T1CCM      ;Load value for the duty cycle.
          MOV   LODUTY,T1CCL      ; Must load MSB first then LSB.

          MOV   #0,T1PC1          ;T1EVT pin is set as a general-purpose
                                  ; input.
          MOV   #0,T1PRI          ;Set the T1 interrupt priority to level 1.
          MOV   #01110000b,T1CTL4 ;Select dual compare mode, enable toggle
                                  ; function of compare registers 1 and 2,
                                  ; and reset T1 on compare 1 equal.
          MOV   #00000000b,T1CTL1 ;Select system clock as timer clock source.
          MOV   #00000001b,T1CTL2 ;Reset the counter (could enable WD here).
          MOV   #00000000b,T1CTL3 ;Clear and disable all interrupts.

          MOV   #00100000b,T1PC2  ;Enable T1PWM (Initial output value (0)
                                  ; selected by bit 6), T1IC/CR is general–
                                  ; purpose input.
          EINT                    ;Enable interrupts.

MAIN      ...                     ;Begin main program loop here.
          ...

;         In this example, the main program checks the values of the
;         MS/LSDATA register pair against the HI/LODUTY register pair. If the
;         values are different, the PWM duty cycle needs to be changed. The
;         main loop also checks to see if any new value is between 0% and
;         100%. If so, the T1INT service is entered. If the new value is
;         0% or 100% exactly, the T1PWM pin is set to a general-purpose
;         output pin, with the data value of 0 (0%) or 1 (100%).

CHKSAME   CMP   MSDATA,HIDUTY     ;Check to see if the new reading in MSDATA
          JNE   UPDATE            ; equals HIDUTY. If not, jump to UPDATE.
          CMP   LSDATA,LODUTY     ;If so, check to see if new reading in
          JEQ   SAMEVALU          ; LSDATA equals LSDUTY. If value is same
                                  ; as last time, no need to update
                                  ; HI/LODUTY. If not, go to UPDATE.

;         The values in the MS/LSDATA registers are not equal to the
;         HI/LODUTY values, therefore the HI/LODUTY registers need to be
;         updated.

UPDATE    MOVW  LSDATA,LODUTY     ;A new value has been read and stored in
          SBIT1 NEWVALUE          ; the HIDUTY/LODUTY register pair.
          JMP   ONWARD            ; Set NEWVALUE then jump to ONWARD.

;         The values in the MS/LSDATA registers are equal to the HI/LODUTY
;         values. No update of the HI/LODUTY registers is required.

SAMEVALU  SBIT0 NEWVALUE          ;The value read from MS/LSDATA equals
                                  ; HI/LODUTY. Clear NEWVALUE.
```


PETITIONER ECOBEE
EX. 1010

```
;         Continue on with the main loop.

ONWARD   ;(NEXT INSTRUCTION)
         ...
         ...

         JBIT1 NEWVALUE,CHK0   ;Check to see if a new value has been
                               ; stored into the HI/LODUTY regs.
                               ; If so check for 0% or 100%.
         BR    ONWARD1         ; If not, branch to ONWARD1.

;        Check to see if the NEW duty cycle is either 0% or 100%. If so,
;        set the T1PWM pin accordingly.

CHK0     CMP   #0,LODUTY       ;Is LODUTY = 0? No, check to see = 100%.
         JNE   CHK100          ; Yes, check the HIDUTY register.
         CMP   #0,HIDUTY       ;Is HIDUTY also = 0?
         JEQ   SETLOW          ; Yes, set T1PWM line low.
                               ; No, check if 100%.
CHK100   CMP   #20h,LODUTY     ;Is LODUTY = 20h?
         JNE   T1ENABLE        ; No, jump to T1ENABLE.
         CMP   #4Eh,HIDUTY     ; If so, is HIDUTY = 4Eh?
         JEQ   SETHIGH         ; Yes, set T1PWM line high.

;        If there has been a new value detected for the PWM duty cycle, and
;        that new value is not 0 (0%) or 4E20h (100%), then clear the
;        NEWVALUE flag and enable T1INT.

T1ENABLE SBIT0 NEWVALUE        ;Clear the NEWVALUE flag.
         MOV   #01h,T1CTL3     ;Allow the compare flag to cause a timer
                               ; interrupt only when the PWM duty cycle
                               ; needs to be altered.

         ...                   ;Continue main routine.
         ...
         BR   MAIN

;        This next section of code is only executed if the desired duty
;        cycle is either 0% or 100% exactly.

SETLOW   MOV  #00010000b,T1PC2 ;Make the T1PWM pin an output pin with the
                               ; present data output.
         MOV  #0001000b,T1PC2  ;Output a low value on the T1PWM pin.
         JMP  ONWARD1

SETHIGH  CLR  MSDATA
         CLR  LSDATA
         MOV  #01010000b,T1PC2 ;Make the T1PWM pin an output pin with the
                               ; present data output.
         MOV  #01010000b,T1PC2 ;Output a high value on the T1PWM pin.
ONWARD1  ...                   ;Continue with the main routine.
         ...
         ...
GOBACK   BR   MAIN
```


PETITIONER ECOBEE
EX. 1010

```
;        The T1 interrupt service routine follows. This routine is only
;        entered if a different duty cycle value is detected, and that new
;        duty cycle value is: 0 < value < 4E20h. (Between 0% and 100%.)

T1INT    MOV   #00000011b,T1CTL1 ;Stop T1 since an update has been read.
         MOV   HIDUTY,T1CCM      ;Load new value for the PWM duty cycle.
         MOV   LODUTY,T1CCL      ; Must load MSB first then LSB.
         MOV   #00000001b,T1CTL2 ;Reset the counter.
         MOV   #01010000b,T1PC2  ;Reset the T1PWM pin to general-purpose
                                 ; output with the present value of the PWM
                                 ; pin.
         MOV   #01010000b T1PC2  ;T1PWM pin will output a 1.
         MOV   #01100000b T1PC2  ;Reenable the T1PWM function with an
                                 ; initial value of 1.
         MOV   #01110000b,T1CTL4 ;Reenable the PWM toggling (T1C and T1CC).
         MOV   #00h,T1CTL1       ;Reselect the system clock as the T1 clock
                                 ; source.
                                 ;The PWM signal now runs with the new
                                 ; duty cycle until the next change.
         MOV   #00000000b,T1CTL3 ;Clear the T1 compare 1 interrupt flag and
                                 ; disable the T1 compare 1 flag again.

RETURN   RTI                     ;Return to the main routine.

;        Set up the interrupt vectors. Only T1INT is used in this example,
;        but the rest of the vectors have been loaded with the reset vector
;        in case of an extraneous pulse.

         .sect ”VECTORS”,7FF4h   ;Location of the vector table.
         .word T1INT             ;T1 interrupt vector.
         .word START             ;Points to reset vector.
         .word STMT              ;        ”
         .word START             ;        ”
         .word START             ;        ”
         .word START             ;Reset vector.
         .end
```


PETITIONER ECOBEE
EX. 1010

Speedometer and Tachometer Display Application

The purpose of this application example is to show you how a TMS370 device could be used to control a digital instrumentation cluster. The TMS370 module requirements for this example include T1, T2n, one A/D channel, and the SPI module. Also, the on-chip EEPROM could be used to keep a nonvolatile record of the odometer readings. This routine is written to show how the timer modules could be used to control the dimming and pulse width measurement requirements of a digital instrument cluster. Certain calculation algorithms and subroutines are application specific and are left uncoded. Additional information concerning the A/D, EEPROM, and SPI modules may be found in this book:

A block diagram of the digital instrumentation example is shown in Figure 20.

Figure 20. Digital Instrumentation Cluster Application

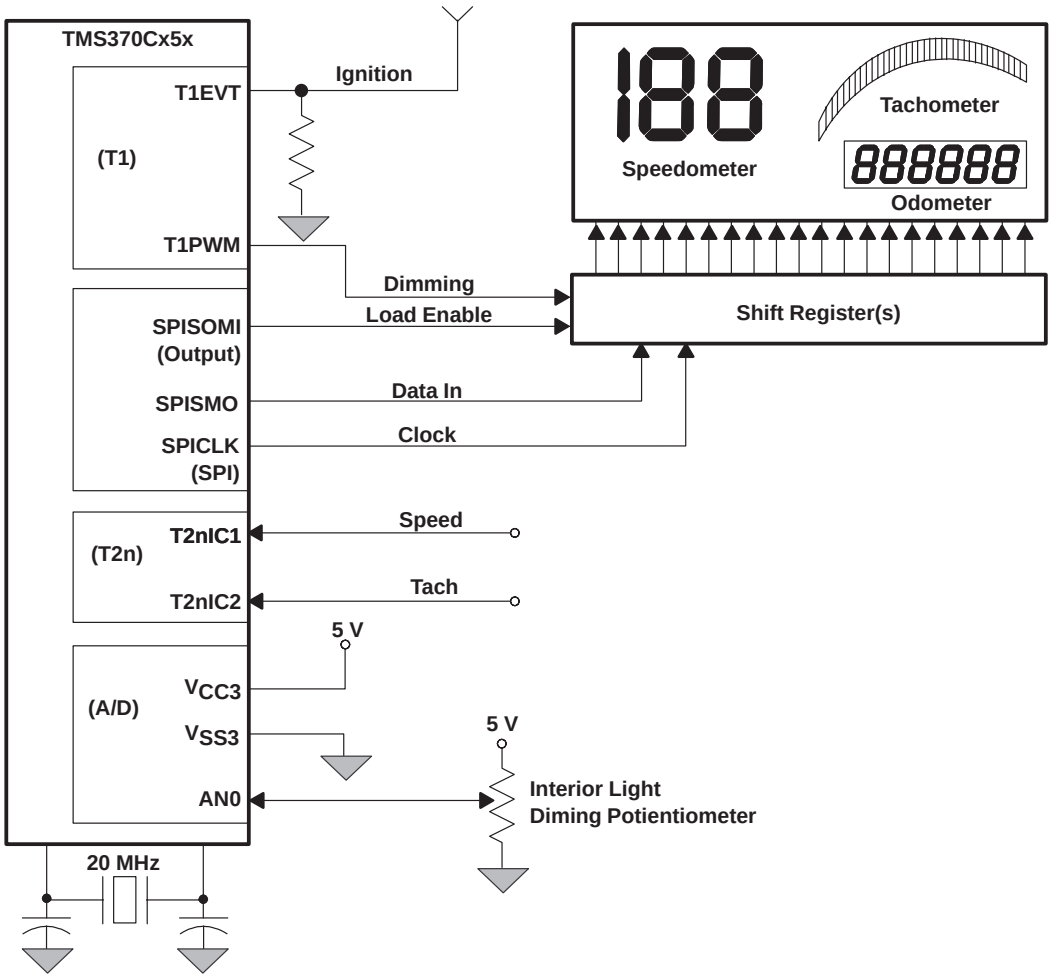

PETITIONER ECOBEE
EX. 1010

Application Overview and Theory of Operation

The basic functions of this application example include input signal measurement, display dimming, serial communication, and conversion of one A/D channel. The speed and tach readings are measured using the two input capture registers of T2n. The dimming of the display is controlled by reading an A/D channel which is connected to a potentiometer. This A/D information is used to determine the duty cycle of a PWM signal output from T1. The information sent to the display is controlled using the SPI module. The main routine in this example checks to see that the ignition switch is on. Once the ignition switch is on, the display begins to be updated, and a series of flags is checked to determine any needed operation.

The flowchart for this route is shown in Figure 21.

PETITIONER ECOBEE
EX. 1010

Figure 21. Instrumentation Flowchart

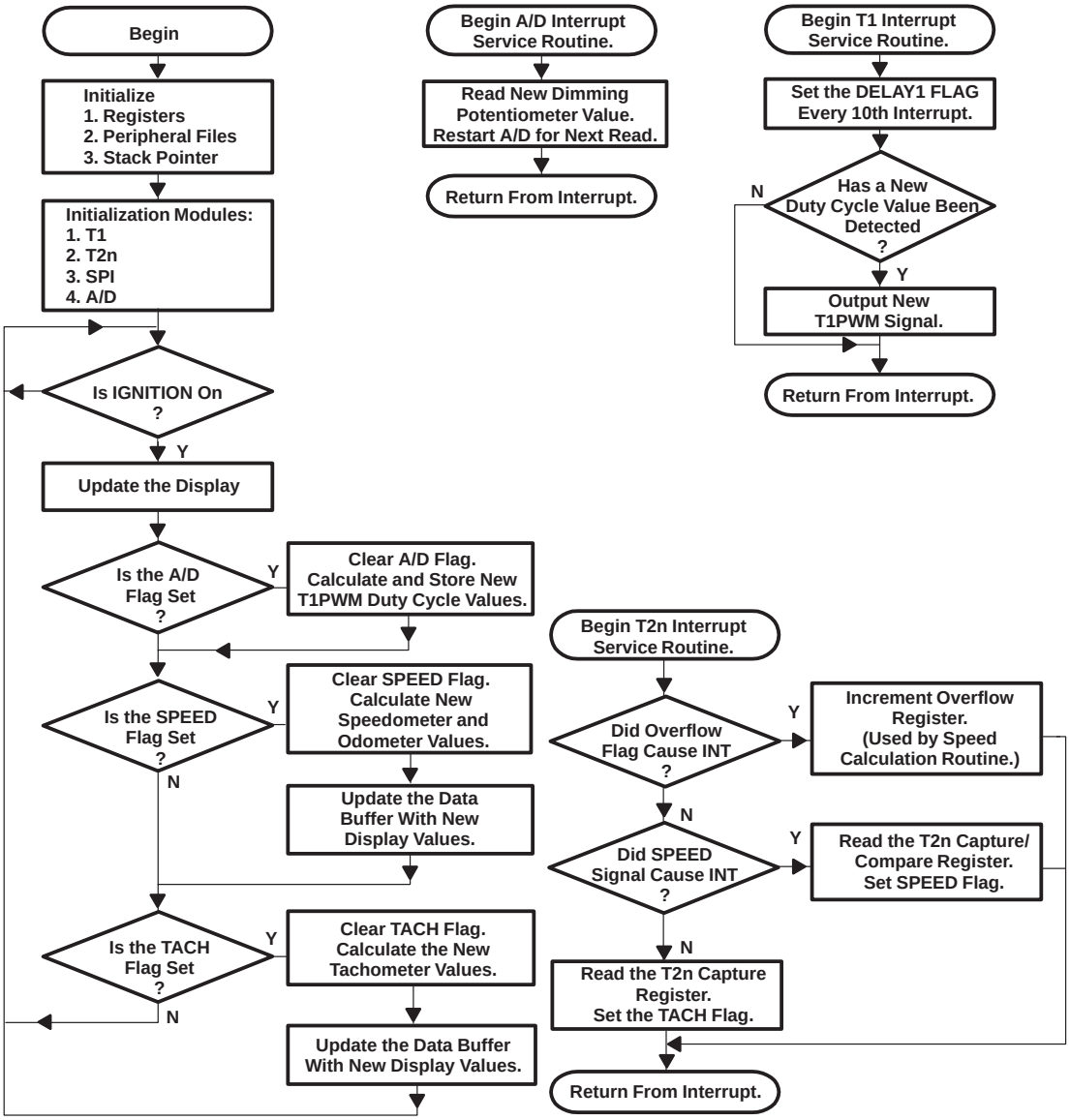

PETITIONER ECOBEE
EX. 1010

T1 Module Operation

The T1 module is used to output a PWM signal to control the brightness of the display. T1 operates in the dual compare mode. The period of the PWM signal is controlled by the T1 compare 1 register, and the pulse width is controlled by the T1 capture/compare register. The pulse width duty cycle may be changed under program control by altering the value in the T1 capture/compare register.

The main routine checks to see if the newest reading from the A/D has changed since it was last read. If the values are different, the NEWVALUE flag is set. If the values are the same, the NEWVALUE flag is cleared. The T1 service routine checks this flag. If the NEWVALUE flag is cleared, the present PWM duty cycle continues. If the NEWVALUE flag is set, the interrupt routine stops the PWM signal, loads the new duty cycle values (HI/LODUTY) into the T1CC registers, and restarts the PWM signal. Stopping the PWM signal helps avoid the possibility of inverting the signal if the new value is larger than the old; for example, when changing from a 20% to a 30% duty cycle signal.

T2n Module Operation

The T2n module is used to measure the speed and tach input signals. The module is set up for the dual capture mode to enable both 16-bit capture registers. The T2nIC1 pin, the T2n capture/compare register, and any T2n counter overflows are used to determine the speed function, while the T2nIC2 pin, the T2n capture register, and any T2n counter overflows are used for the tach function.

When a valid signal occurs on either T2n input capture pin, the associated capture register is loaded with the value of the T2n counter. The T2n service routine then reads the contents of the capture register and any T2n overflows that may have occurred. This information can be used to determine the speed and tach readings by keeping track of how long it has been since the last pulse occurred. The actual conversion routines used to determine the speedometer, odometer, and tachometer display information is application dependent, and is not coded in this example.

SPI Module Operation

The SPI module is used to send the display information to the instrument cluster. The main routine constantly updates the display with any new tach information every 1/20 second, and updates the complete display every 1/2 second. The actual number of bytes to be sent, the data format, and how often the display needs to be updated are all application specific variables that you may alter for your needs.

PETITIONER ECOBEE
EX. 1010

ADC1 Module Operation

One channel of the ADC1 module (AN0) is read continually to determine the desired brightness of the display. The display brightness is application specific, so you need to define the algorithm used to determine the duty cycle of the T1 PWM signal. Also, the brightness of the display may not be in direct proportion to the duty cycle of the PWM signal.

Digital Instrumentation Cluster Routine

The source code for the instrument cluster is as follows:

```
          .title "Digital Instrument Cluster Controller"
          .text 7000h

;         Allocate space for the registers used in the application routine.

HIDUTY    .equ  R2   ;Register used to store MSB of any new duty cycle value.
LODUTY    .equ  R3   ;Register used to store LSB of any new duty cycle value.
MS50      .equ  R4   ;Used for the 50-ms delay in T1 interrupt routine.
HALFSEC   .equ  R5   ;Used for 1/2 second decrementer value.

ODO100K   .equ  R6   ;Used to store the Odo's 100K digit info.
ODO10K    .equ  R7   ;Used to store the Odo's 10K digit info.
ODO1000   .equ  R8   ;Used to store the Odo's 1K digit info.
ODO100    .equ  R9   ;Used to store the Odo's 100's digit info.
ODO10     .equ  R10  ;Used to store the Odo's 10's digit info.
ODO1      .equ  R11  ;Used to store the Odo's 1's digit info.
ODOTENTH  .equ  R12  ;Used to store the Odo's 1/10's digit info.

FLAGS     .equ  R13  ;Register used to store any software flags.
OVERCNT   .equ  R14  ;Used to keep count of T2n overflows.
OVERSPD   .equ  R15  ;Used for any T2n overflows during speed pulse.
OVERTACH  .equ  R16  ;Used for any T2n overflows during tach pulse.
TEST1     .equ  R17  ;Used for the ignition switch test.
ADREAD    .equ  R18  ;Used to store A/D data in A/D interrupt routine.
TACH1     .equ  R19  ;Used to store a byte of tach information.
TACH2     .equ  R20  ;Used to store a byte of tach information.
TACH3     .equ  R21  ;Used to store a byte of tach information.
TACH4     .equ  R22  ;Used to store a byte of tach information.

HISPEED   .equ  R23  ;Used to store the Speedo's 100's digit info.
MIDSPEED  .equ  R24  ;Used to store the Speedo's 10's digit info.
LOSPEED   .equ  R25  ;Used to store the Speedo's 1's digit info.
ADLAST    .equ  R26  ;Storage register for the last A/D reading.
SPEEDMSB  .equ  R27  ;Used in the speed calculation routine for the MSB.
SPEEDLSB  .equ  R28  ;Used in the speed calculation routine for the LSB.
TACHMSB   .equ  R29  ;Used in the tach calculation routine for the MSB.
TACHLSB   .equ  R30  ;Used in the tach calculation routine for the LSB.
```


PETITIONER ECOBEE
EX. 1010

```
DATA      .equ  R31       ;Set aside a 20-byte block of RAM that will be used
                          ; to store the SPI information.
                          ; In this example the DATA block is set up as
                          ; follows:
                          ; DATA    : Tach information (n)
                          ; DATA+1  : Tach information (n+1)
                          ; DATA+2  : Tach information (n+2)
                          ; DATA+3  : Tach information (n+3)
                          ; DATA+4  : Speedometer (100's Digit)
                          ; DATA+5  : Speedometer (10's Digit)
                          ; DATA+6  : Speedometer (1's Digit)
                          ; DATA+7  : Odometer (100K digit)
                          ; DATA+8  : Odometer (10K digit)
                          ; DATA+9  : Odometer (lK digit)
                          ; DATA+10 : Odometer (100's digit)
                          ; DATA+11 : Odometer (10's digit)
                          ; DATA+12 : Odometer (1's digit)
                          ; DATA+13 : Odometer (1/10's digit)
                          ; DATA+14 : Unused in this example.
                          ; DATA+15            "
                          ; DATA+16            "
                          ; DATA+17            "
                          ; DATA+18            "
                          ; DATA+19            "
                          ; DATA+20            "

NEWVALUE  .dbit 0,FLAGS   ;Flag used to trigger a new PWM duty cycle.
IGNITION  .dbit 1,FLAGS   ;Flag used to tell the main routine if the ignition
                          ; switch is on or off.
DELAY1    .dbit 2,FLAGS   ;Flag used to signal a 1/10th second delay.
SPDREAD   .dbit 3,FLAGS   ;Flag used to show a new speed reading has been
                          ; taken.
TACHREAD  .dbit 4,FLAGS   ;Flag used to show a new tach reading has been
                          ; taken.
ADFLAG    .dbit 5,FLAGS   ;Flag used to signal new A/D information has been
                          ; read.
```


PETITIONER ECOBEE
EX. 1010

```
;         Set up Equate table for peripheral file registers which are used
;         by the T1, T2n, SPI, and A/D modules.

T1CNTRM   .EQU P040      ;T1 counter MSB
T1CNTRL   .EQU P041      ;T1 counter LSB
T1CM      .EQU P042      ;T1 compare register MSB
T1CL      .EQU P043      ;T1 compare register LSB
T1CCM     .EQU P044      ;T1 capture/compare register MSB
T1CCL     .EQU P045      ;T1 capture/compare register LSB
T1CTL1    .EQU P049      ;T1 control register 1
T1CTL2    .EQU P09A      ;T1 control register 2
T1CTL3    .EQU P04B      ;T1 control register 3
T1CTL4    .EQU P04C      ;T1 control register 4
T1PC1     .EQU P04D      ;T1 port control 1
T1PC2     .EQU P04E      ;T1 port control 2
T1PRI     .EQU P04F      ;T1 interrupt priority control

T2ACNTRM  .EQU P060      ;T2A counter MSB
T2ACNTRL  .EQU P061      ;T2A counter LSB

T2ACM     .EQU P062      ;T2A compare register MSB
T2ACL     .EQU P063      ;T2A compare register LSB
T2ACCM    .EQU P064      ;T2A capture 1/compare 2 register MSB
T2ACCL    .EQU P065      ;T2A capture 1/compare 2 register LSB
T2ACTL1   .EQU P06A      ;T2A control register 1
T2ACTL2   .EQU P06B      ;T2A control register 2
T2ACTL3   .EQU P06C      ;T2A control register 3
T2APC1    .EQU P06D      ;T2A port control 1
T2APC2    .EQU P06E      ;T2A port control 2
T2APRI    .EQU P06F      ;T2A interrupt priority control

SPICCR    .EQU P032      ;SPI configuration control register
SPICTL    .EQU P033      ;SPI control register
SPIBUF    .EQU P037      ;Receive data buffer register
SPIDAT    .EQU P039      ;Serial data register
SPIPC1    .EQU P03D      ;SPI port control register 1
SPIPC2    .EQU P03E      ;SPI port control register 2
SPIPRI    .EQU P03F      ;SPI interrupt priority register

ADCTL     .EQU P070      ;Analog control register
ADSTAT    .EQU P071      ;Analog status and interrupt register
ADDATA    .EQU P072      ;Analog conversion data register
ADIN      .EQU P07D      ;Port E data input register
ADENA     .EQU P07E      ;Port E input enable register
ADPRI     .EQU P07F      ;Port E interrupt priority register
```


PETITIONER ECOBEE
EX. 1010

```
;         Begin initialization:

;         Set up stack pointer to begin at R60.
;         Initialize registers to their START values.
;         Initialize the T1 module.
;         Initialize the T2A module.
;         Initialize the SPI module.
;         Initialize the A/D module.

START     MOV  #60,B            ;Initialize the stack pointer to start at
          LDSP                  ;  register R60.
          DINT                  ;Globally disable all interrupts.

;         Initialize the registers to their power-up values.

RESET     MOV  #0C3h,HIDUTY     ;The duty cycle of the PWM signal is
          MOV  #048h,LODUTY     ; initialized to approximately 100%.

;         Also, update the ODO registers from EEPROM (not shown).

          MOV  #10,HALFSEC      ;Start with the value 10.
          MOV  #5,MS50          ;Start with the value 5.

;         Clear the remaining registers.

          MOV  #39,B            ;This routine clears the 38 registers
          CLR  A                ; starting at FLAGS and ending at DATA+20.
CLRREGS   MOV  A,*FLAGS–1[B]
          DJNZ B,CLRREGS

          Begin the module initialization routines.

T1INIT    MOV  #0C3h,T1CM       ;Set up the Tl compare register to contain
          MOV  #04Fh,T1CL       ; (C34Fh). PWM frequency = 100 Hz. (The
                                ; actual frequency is not very important
                                ; for this application.)
                                ;Must load MSB first then LSB.

          MOV  HIDUTY,T1CCM     ;Load value for the duty cycle.
          MOV  LODUTY,T1CCL     ;Must load MSB first then LSB.

          MOV  #0,T1PC1         ;T1EVT pin is set as a general-purpose input.
          MOV  #00100000b,T1PC2 ;Enable T1PWM (initial output value (0)
                                ; selected by bit 6), T1IC/CR is a
                                ; general-purpose input.
          MOV  #0,T1PRI         ;Set the T1 interrupt priority to level 1.
          MOV  #01110000b,T1CTL4;Select dual compare mode, enable toggle
                                ; function of compare registers 1 and 2, and
                                ; reset T1 on compare 1 equal.
          MOV  #00000000b,T1CTL1;Select system clock as timer clock source.
          MOV  #00000001b,T1CTL3;Clear all and enable T1C1 interrupt.
          MOV  #00000001b,T1CTL2;Reset the counter (could enable WD here).
```


PETITIONER ECOBEE
EX. 1010

```
T2AINIT   MOV  #0,T2APC1          ;T2nEVT pin is set as a general-purpose
                                  ; input
          MOV  #00100010b,T2APC2  ;Enable T2nIC1 and T2nIC2 pin to function
                                  ; as input capture triggers.
          MOV   #O,T2APRI         ;Set the T2n interrupt priority to level 1.
          MOV   #10000011b,T2ACTL3;Select dual capture mode, enable high to
                                  ; low pulse to cause a capture for both
                                  ; the speed and tach signals.
          MOV   #00000110b,T1CTL2 ;Clear and enable both input capture
                                  ; interrupts
          MOV   #011h,T2ACTL1     ;Enable and clear the T2n overflow flag
                                  ; Select the system clock as clock source,
                                  ; and reset T2n.

SPIINIT   MOV   #2,SPIPC1         ;Enable the SPICLK pin.
          MOV   #20h,SPIPC2       ;Enable the SPISIMO pin, make SPISOMI
                                  ; a general-purpose input pin.
          MOV   #11000110b,SPICCR ;Reset SPI, 7-bit data out on falling
                                  ; SPICLK. Baud rate = CLKIN/8.
          MOV   #00000110b,SPICTL ;Master mode, enable TALK.

ADINIT    MOV   #001h,ADSTAT      ;Enable interrupt clear flags.
          MOV   #0,ADPRI          ;Select interrupt level 1 for the A/D.
          MOV   #040h,ADCTL       ; Start sampling. VSS3 selected as VREF,
                                  ; AN0 selected as input channel.
          MOV   #0C0h,ADCTL       ;Start conversion

          EINT                    ;Enable interrupts.

;         The initialization block is completed.

;         Begin main program here.
;         Check to see if the ignition switch is turned on.

MAIN      MOV   T1PC1,TEST1       ;See if the ignition switch is on or off.
          BTJZ  #08h,TEST1,CLRIGN ;If low (ignition off) jump to CLRING.
SETIGN    SBIT1 IGNITION          ; If hi (ignition on), set the IGNITION
                                  ; bit.
          JMP   PAST1
CLRIGN    SBIT0 IGNITION          ;If ignition is off, clear the IGNITION
                                  ; bit.
PAST1     ...                     ;Continue on with the main routine.
          ...
          ...

CHKIGN    JBIT0 IGNITION,MAIN     ;If the IGNITION flag is cleared (ignition
                                  ; off) then jump back to main.
          SBIT0 IGNITION          ;If IGNITION flag is set (ignition on),
                                  ; clear the flag then update the display.
```


PETITIONER ECOBEE
EX. 1010

```
;         Update the display.

;         When the ignition switch is on, the display needs to be updated.
;         How often the display needs updating depends on your system
;         requirements. Also, all information may not need updating each time
;         (for example, the odometer does not need updating as often as the
;         tachometer does.) Also, the number of data bytes sent via the SPI
;         depends on the type of display being used. Typically, one bit of
;         data will be sent per segment displayed.

;         The display routine assumes that partial information needs updating
;         every 1/20th second, and all display information needs updating
;         every 1/2 second. It is up to you to decide what values are
;         required and how often they need updating. A block of 20 bytes
;         starting at DATA is set aside to store the information required.

UPDATE    JBIT0 DELAY1,UPDATE      ;Wait for the 1/20th second delay from the
                                   ; T1 interrupt routine.
          SBIT0 DELAY1             ;Clear the DELAY1 flag after being set.
          DJNZ  HALFSEC,LOADPART   ;Check to see if the complete display
                                   ; needs updating yet.
          MOV   #10, HALFSEC       ;Yes, reload SECOND and set the B
LOADALL   MOV   #??,B              ; register to your desired value.
          JMP   CHKSPI
LOADPART  MOV   #??,B              ;Load B register with your desired
                                   ; value.

CHKSPI    BTJZ  #040h,SPICTL,CHRSPI;Check to see if you can send a byte of
                                   ; data yet. If so, continue.
          MOV   *DATA-1[B],A       ;Load the data to be sent out into
          MOV   A,SPIDAT           ; the SPIDAT register.
          DJNZ  B,CHKSPI           ;Is the data string through yet?
          MOV   #025h,SPIPC2       ;Toggle SPISOMI to latch data.
          MOV   #021h,SPIPC2       ;Pull SPISOMI low again.
;         Check to see if a new A/D reading has been taken. If so, check to
;         see if this reading is different from the last reading.

CHKAD     JBIT0 ADFLAG,RETURN      ;Has a new value been read by the A/D
          SBIT0 ADFLAG             ; interrupt service routine? No, jump
                                   ; to RETURN.
CHKSAME   CMP   ADREAD,ADLAST      ; Yes, are values same?
          JEQ   RETURN             ;Yes, jump to RETURN.
          MOV   ADREAD,ADLAST      ;No, load new A/D data into the ADLAST
                                   ; register.

CALCDUTY  ...                      ;Calculate the new duty cycle values.
          ...
;         In this section of code, you will need to decide what algorithm and
;         variables your application requires for the dimming function. The
;         register pair HI/LODUTY will need to be loaded with the values that
;         will then be loaded into the T1 capture/compare register by the
;         T1 interrupt service routine to determine a new PWM duty cycle. A
;         possible solution could be a table look-up algorithm that loads a
;         16-bit value into the HI/LODUTY registers with a maximum value of
;         less than C34Fh. (Value of the T1 PWM signal period.)
          ...
          ...
          MOV   #??,HIDUTY         ;Load the new duty cycle value into the
          MOV   #??,LODUTY         ; HI/LODUTY register pair.

SBIT1     NEWVALUE                 ; Set the NEWVALUE flag, which is used
                                   ; in the T1 service routine.

;         Check for a new speedometer value.
```


PETITIONER ECOBEE
EX. 1010

```
CHKSPEED  JBIT0 SPDREAD,CHKTACH   ;Has a new speed value been seen by the
                                  ; T2n interrupt routine? No, jump to
                                  ; CHKTACH.
          SBIT0 SPDREAD           ;Yes, reset the flag and calculate the
                                  ; speed variable

CALCSPD   ...                     ;Calculate the new speed and odometer
                                  ; values.


LDSPEED   MOV   #3,B              ;Move the calculated speed readings to the
          MOV   *HISPEED–1[B],A   ; 3 registers in the data buffer set up
          MOV   A,*DATA+3[B]      ; for the speed information (used by the
                                  ; SPI).
          DJNZ  B,LDSPEED

LOADODO   MOV   #7,B              ;Move the calculated odometer values to the
          MOV   *ODO100K–1[B],A   ; 7 registers in the data buffer set up
          MOV   A,*DATA+6[B]      ; for the odometer information (used by
                                  ; the SPI).
          DJNZ  B,LOADODO


;         Check for a new tachometer value.

CHKTACH   JBIT0 TACHREAD,RETURN   ;Has a new tach value been seen by the
                                  ; T2n interrupt routine? No, jump to
                                  ; RETURN.
          SBIT0 TACHREAD          ;Yes, reset the flag and calculate the
                                  ; tach variable.

CALCTACH  ...                     ;Your tach calculation routine goes here...

LOADTACH  MOV   #4,B              ;Move the calculated tach readings to the
          MOV   *TACH1–1[B],A     ; 4 registers in the data buffer set up
          MOV   A,*DATA–1[B]      ; for the tach information (used by
          DJNZ  B,LOADTACH        ; the SPI).

RETURN    BR    MAIN              ;Return to beginning.

;        Interrupt routines to follow:

;        The T1 interrupt service routine follows. This routine is entered
;        every 10 ms. The duty cycle is altered only when the new data is
;        loaded into the HIDUTY/LODUTY register pair.

T1INT    DJNZ   MS50,CLEAR        ;Every 5th time through this routine,
                                  ; the DELAY1 flag needs to be set.
         MOV    #5,MS50           ;Reset the MS50 register.
         SBIT1  DELAY1            ;Set the DELAY1 flag.

CLEAR    MOV    #00000001b,T1CTL3 ;Clear the T1C1 interrupt flag and reenable
                                  ; the T1C1 flag.
         JBIT0 NEWVALUE,T1RET     ;If an update to the PWM duty cycle is
         SBIT0 NEWVALUE           ; required, continue with the rest of
                                  ; the routine. If not, jump to RTI.

         MOV   #00000011b,T1CTL1  ;Stop T1 since an update has been read.
         MOV   HIDUTY,T1CCM       ;Load new value for the PWM duty cycle.
         MOV   LODUTY,T1CCL       ; Must load MSB first then LSB.
         MOV   #00000001b,T1CTL2  ;Reset the counter.
         MOV   #01010000b,T1PC2   ;Reset the T1PWM pin to general-purpose
                                  ; output with the present value of the PWM
                                  ; pin.
         MOV   #01010000b,T1PC2   ;T1PWM pin outputs a 1.
```


PETITIONER ECOBEE
EX. 1010

```
         MOV   #01100000b,T1PC2   ;Reenable the T1PWM function with an
                                  ; initial value of 1.
         MOV   #01110000b,T1CTL4  ;Reenable the PWM toggling (T1C and T1CC).
         MOV   #00h,T1CTL1        ;Reselect the system clock as the T1 clock
                                  ; source.
                                  ;The PWM signal now runs with the new
                                  ; duty cycle until the next change.
T1RET    RTI                      ;Return to the main routine.

;        The T2n interrupt service routine follows. This routine provides
;        the frequency data from the speed and tach inputs.

T2AINT   BTJO  #08h,T2ACTL1,OVRFLW;Was the interrupt caused by the T2n
                                  ; overflow bit? If so, go to OVRFLW.

         BTJO  #040h,T2nCTL2,CAPT2;Was interrupt caused by tach signal?
                                  ; if so, go to CAPT2. If not, interrupt
                                  ; must have caused by speed signal.

;        Read the capture/compare register for the speed value.

CAPT1    MOV   #01100110b,T2ACTL2 ;Clear the flag and reenable the interrupt.
         MOV   T2ACCL,SPEEDLSB    ;Read the capture/compare register and
         MOV   T2ACCM,SPEEDMSB    ; store values into SPEEDMSB/LSB register
                                  ; pair. Must read LSB first.
         MOV   OVERCNT,OVERSPD    ;Save the contents of the OVERCNT register
                                  ; in OVERSPD. Used in CALC routine.
         SBIT1 SPDREAD            ;Set the SPDREAD flag.
SPDRET   RTI

;        Read the capture register for the tach value.

CAPT2n   MOV   #10100110b,T2ACTL2 ;Clear the flag and reenable the interrupt.
         MOV   T2ACL,TACHLSB      ;Read the capture register and store values
         MOV   T2ACM,TACHMSB      ; into the TACHMSB/LSB register pair. Must
                                  ; read LSB first.
         MOV   OVERCNT,OVERTACH   ;Save the contents of the OVERCNT register
                                  ; in OVERTACH. Used in CALC routine.
         SBIT1 TACHREAD           ;Set the TACHREAD flag.
TACHRET  RTI

;       Increment the OVERCNT register.

OVRFLW  INC   OVERCNT             ;Increment the overflow counter register
                                  ; if an overflow has occurred.
        RTI

;       The A/D interrupt service routine follows. This routine reads
;       ADDATA and stores the value into the ADREAD register.

ADINT   MOV   ADDATA,ADREAD       ;Read the A/D data.
        MOV   #040h,ADCTL         ;Start new sample.
        MOV   #080h,ADCTL         ;Start new conversion
        SBIT1 ADFLAG              ;Set the ADFLAG bit to signal an A/D
                                  ; reading has recently been completed.
GOBACK  RTI                       ;Return to the main routine.
```


PETITIONER ECOBEE
EX. 1010

```
.sect ”VECTORS”,7FFCh     ;Interrupt vectors:
.word ADINT               ; A/D      vector
.word T2AINT              ; T2A       vector
.word GOBACK              ; SCI TX   vector (not used)
.word GOBACK              ; SCI RX   vector (not used)
.word T1INT               ; Timer 1  vector
.word GOBACK              ; SPI      vector (not used)
.word GOBACK              ; INT 3    vector (not used)
.word GOBACK              ; INT 2    vector (not used)
.word GOBACK              ; INT 1    vector (not used)
.word START               ; RESET    vector
.end
```


PETITIONER ECOBEE
EX. 1010

Conclusion

The timer modules of the TMS370 8-bit microcontroller family are designed to provide the flexibility to meet a broad range of timer and counter applications. The software and interface examples illustrate how the basic functions of the timer modules, along with other modules of the TMS370 family, can be used to provide cost-effective system solutions. This application report has been designed to be used in conjunction with the *TMS370 Family User's Guide.* The manual is a valuable reference and provides many answers to questions not addressed in this report.

PETITIONER ECOBEE
EX. 1010

Appendix A

Timer 1 (T1) Control Registers

T1 is controlled and accessed through registers in the peripheral file. These registers are shown in Table 7 and are described in the *TMS370 Family User's Guide*. The bits shown in the shaded boxes in Table 7 are privilege mode bits; they can only be written to in the privilege mode. The T1 operational mode block diagrams are shown in Figure 22 and Figure 23.

Figure 22. Timer 1 – Dual Compare Mode

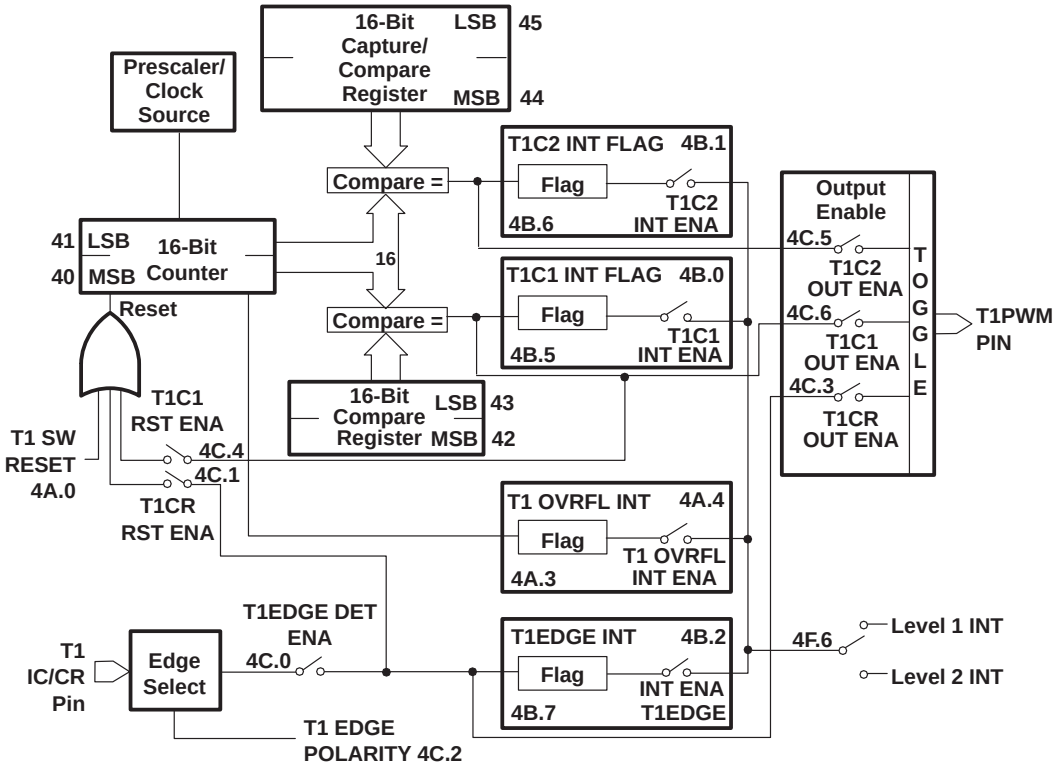

PETITIONER ECOBEE
EX. 1010

Table 7. Timer 1 Module Register Memory Map

Designation	ADDR	PF	*Bit 7*	*Bit 6*	*Bit 5*	*Bit 4*	*Bit 3*	*Bit 2*	*Bit 1*	*Bit 0*
T1CNTR	1040h	P040	Bit 15	T1 Counter MSbyte						Bit 8
T1CNTR	1041h	P041	Bit 7	T1 Counter LSbyte						Bit 0
T1C	1042h	P042	Bit 15	Compare Register MSbyte						Bit 8
T1C	1043h	P043	Bit 7	Compare Register LSbyte						Bit 0
T1CC	1044h	P044	Bit 15	Capture/Compare Register MSbyte						Bit 8
T1CC	1045h	P045	Bit 7	Capture/Compare Register LSbyte						Bit 0
WDCNTR	1046h	P046	Bit 15	WD Counter MSbyte						Bit 8
WDCNTR	1047h	P047	Bit 7	WD Counter LSbyte						Bit 0
WDRST	1048h	P048	Bit 7	WD Reset Key						Bit 0
T1CTL1	1049h	P049	WD OVRFL TAP SEL † (RP–0)	WD INPUT SELECT2† (RP–0)	WD INPUT SELECT1† (RP–0)	WD INPUT SELECT0† (RP–0)	—	T1 INPUT SELECT2 (RW–0)	T1 INPUT SELECT1 (RW–0)	T1 INPUT SELECT0 (RW–0)
T1CTL2	104Ah	P04A	WD OVRFL RST ENA † (RS–0)	WD OVRFL INT ENA (RW–0)	WD OVRFL INT FLAG (RC–*)	T1 OVRFL INT ENA (RW–0)	T1 OVRFL INT FLAG (RC–0)	—	—	T1 SW RESET (S–0)
			Dual Compare Mode							
T1CTL3	104Bh	P04B	T1EDGE INT FLAG (RC–0)	T1C2 INT FLAG (RC–0)	T1C1 INT FLAG (RC–0)	—	—	T1EDGE INT ENA (RW–0)	T1C2 INT ENA (RW–0)	T1C1 INT ENA (RW–0)
			Capture / Compare Mode							
			T1EDGE INT FLAG (RC–0)	—	T1C1 INT FLAG (RC–0)	—	—	T1EDGE INT ENA (RW–0)	—	T1C1 INT ENA (RW–0)
			Dual Compare Mode							
T1CTL4	104Ch	P04C	T1 MODE = 0 (RW–0)	T1C1 OUT ENA (RW–0)	T1C2 OUT ENA (RW–0)	T1C1 RST ENA (RW–0)	T1CR OUT ENA (RW–0)	T1EDGE POLARITY (RW–0)	T1CR RST ENA (RW–0)	T1EDGE DET ENA (RW–0)
			Capture / Compare Mode							
			T1 MODE = 1 (RW–0)	T1C1 OUT ENA (RW–0)	—	T1C1 RST ENA (RW–0)	—	T1EDGE POLARITY (RW–0)	—	T1EDGE DET ENA (RW–0)
T1PC1	104Dh	P04D	—	—	—	—	T1EVT DATA IN (R–0)	T1EVT DATA OUT (RW–0)	T1EVT FUNCTION (RW–0)	T1EVT DATA DIR (RW–0)
T1PC2	104Eh	P04E	T1PWM DATA IN (R–0)	T1PWM DATA OUT (RW–0)	T1PWM FUNCTION (RW–0)	T1PWM DATA DIR (RW–0)	T1IC/CR DATA IN (R–0)	T1IC/CR DATA OUT (RW–0)	T1IC/CR FUNCTION (RW–0)	T1IC/CR DATA DIR (RW–0)
T1PRI	104Fh	P04F	T1 STEST (RP–0)	T1 PRIORITY (RP–0)	—	—	—	—	—	—

† Once the WD OVRFL RST ENA bit is set, these bits cannot be changed until a reset occurs; this applies only to the standard WD and to the simple counter. In the hard WD, these bits can be modified at any time; the WD INPUT SELECT2 bit is ignored.

PETITIONER ECOBEE
EX. 1010

Figure 23. Timer 1 – Capture/Compare Mode

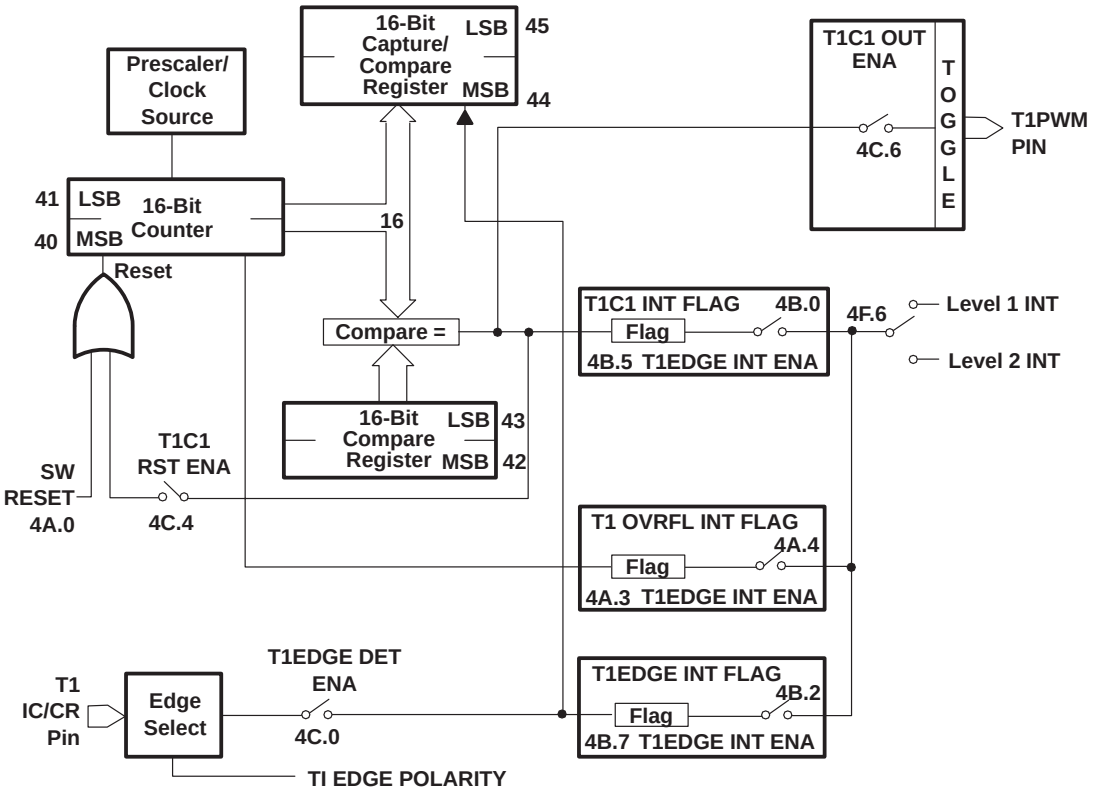

PETITIONER ECOBEE
EX. 1010

Appendix B

Timer 2 (T2A) Control Registers

T2A is controlled and accessed through registers in the peripheral file. These registers are shown in Table 8 and are described in the *TMS370 Family User's Guide*. The bits shown in the shaded boxes in Table 8 are privilege mode bits; they can only be written to in the privilege mode. Figure 24 and Figure 25 illustrate the T2A operational mode block diagrams.

PETITIONER ECOBEE
EX. 1010

Table 8. Timer 2A Module Register Memory Map

Designation	ADDR T2A/T2B	PF T2A/T2B	Bit 7	Bit 6	Bit 5	Bit 4	Bit 3	Bit 2	Bit 1	Bit 0
T2nCNTR	1060h/1080h	P060/P080	Bit 15	T2n Counter MSbyte						Bit 8
T2nCNTR	1061h/1081h	P061/P081	Bit 7	T2n Counter LSbyte						Bit 0
T2nC	1062h/1082h	P062/P082	Bit 15	Compare Register MSbyte						Bit 8
T2nC	1063h/1083h	P063/P083	Bit 7	Compare Register LSbyte						Bit 0
T2nCC	1064h/1084h	P064/P084	Bit 15	Capture/Compare Register MSbyte						Bit 8
T2nCC	1065h/1085h	P065/P085	Bit 7	Capture/Compare Register LSbyte						Bit 0
T2nIC	1066h/1086h	P066/P086	Bit 15	Capture Register 2 MSbyte						Bit 8
T2nIC	1067h/1087h	P067/P087	Bit 7	Capture Register 2 LSbyte						Bit 0
T2nCTL1	106Ah/108Ah	P06A/P08A	—	—	—	T2n OVRFL INT ENA (RW–0)	T2n OVRFL INT FLAG (RC–0)	T2n INPUT SELECT1 (RW–0)	T2n INPUT SELECT0 (RW–0)	T2n SW RESET (S–0)
T2nCTL2	106Bh/108Bh	P06B/P08B	In Dual Compare Mode							
			T2nEDGE1 INT FLAG (RC–0)	T2nC2 INT FLAG (RC–0)	T2nC1 INT FLAG (RC–0)	—	—	T2nEDGE 1 INT ENA (RW–0)	T2nC2 INT ENA (RW–0)	T2nC1 INT ENA (RW–0)
			In Dual Capture Mode							
			T2EDGE1 INT FLAG (RC–0)	T2EDGE2 INT FLAG (RC–0)	T2nC1 INT FLAG (RC–0)	—	—	T2nEDGE 1 INT ENA (RW–0)	T2nEDGE 2 INT ENA (RW–0)	T2nC1 INT ENA (RW–0)
T2nCTL3	106Ch/108Ch	P06C/P08C	In Dual Compare Mode							
			T2n MODE= 0 (RW–0)	T2nC1 OUT ENA (RW–0)	T2nC2 OUT ENA (RW–0)	T2nC1 RST ENA (RW–0)	T2nEDGE 1 OUT ENA (RW–0)	T2nEDGE 1 POLARITY (RW–0)	T2nEDGE 1 RST ENA (RW–0)	T2nEDGE 1 DET ENA (RW–0)
			In Dual Capture Mode							
			T2n MODE= 1 (RW–0)	—	—	T2nC1 RST ENA (RW–0)	T2nEDG2 POLARITY (RW–0)	T2nEDGE 1 POLARITY (RW–0)	T2nEDGE 2 DET ENA (RW–0)	T2nEDGE 1 DET ENA (RW–0)
T2nPC1	106Dh/108Dh	P06D/P08D	In Dual Compare and Dual Capture Mode							
			—	—	—	—	T2nEVT DATA IN (RW–0)	T2nEVT DATA OUT (RW–0)	T2nEVT FUNC-TION (RW–0)	T2nEVT DATA DIR (RW–0)
T2nPC2	106Eh/108Eh	P06E/P08E	T2nIC2/ PWM DATA IN (R–0)	T2nIC2/PM DATA OUT (RW–0)	T2nIC2/PM FUNC-TION (RW–0)	T2nIC2/PM DATA DIR (RW–0)	T2nIC1/CR DATA IN (R–0)	T2nIC1/CR DATA OUT (RW–0)	T2nIC1/CR FUNC-TION (RW–0)	T2nIC1/CR DATA DIR (RW–0)
T2nPRI	106Fh/108Fh	P06F/P08F	T2n STEST (RP–0)	T2n PRIORITY (RP–0)	—	—	—	—	—	—

PETITIONER ECOBEE
EX. 1010

Figure 24. Dual Compare Mode for T2n

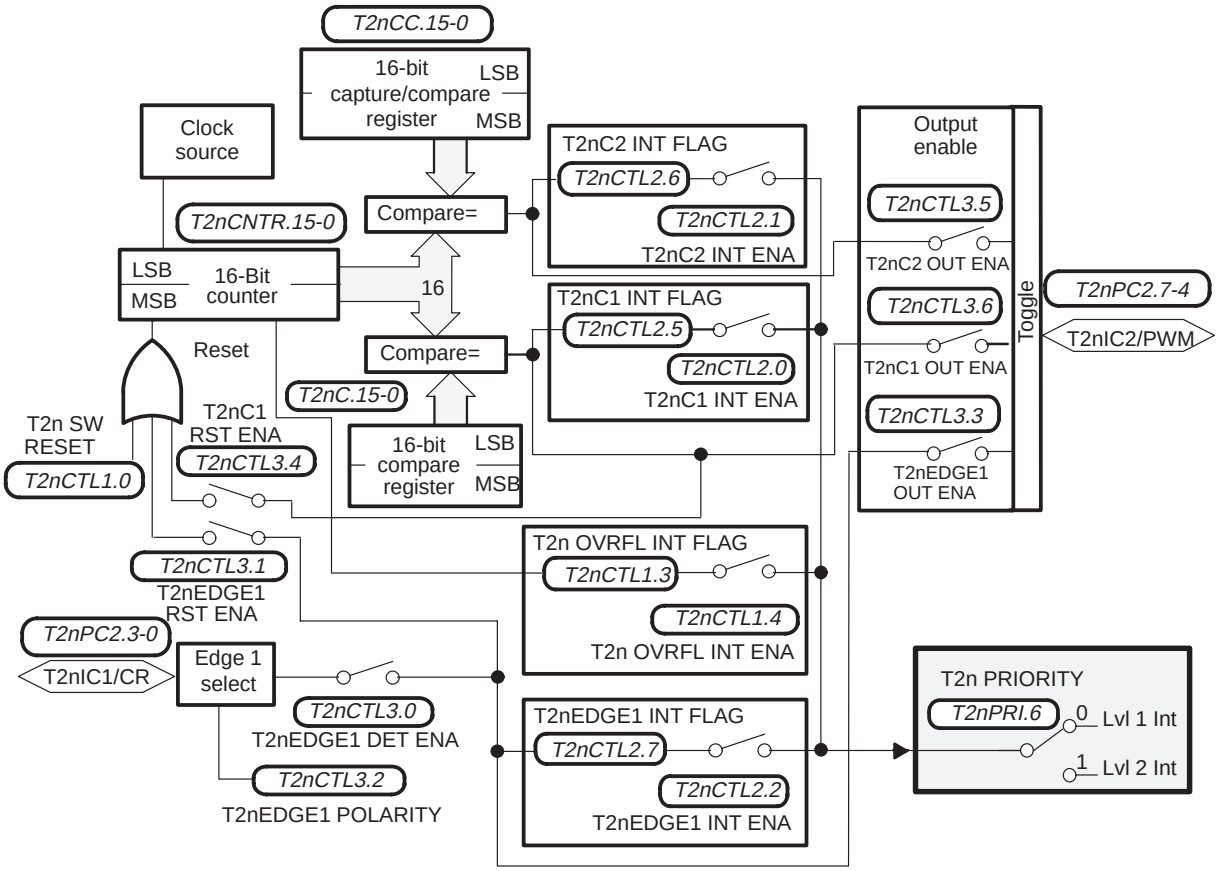

PETITIONER ECOBEE
EX. 1010

Figure 25. Dual Capture Mode for T2n

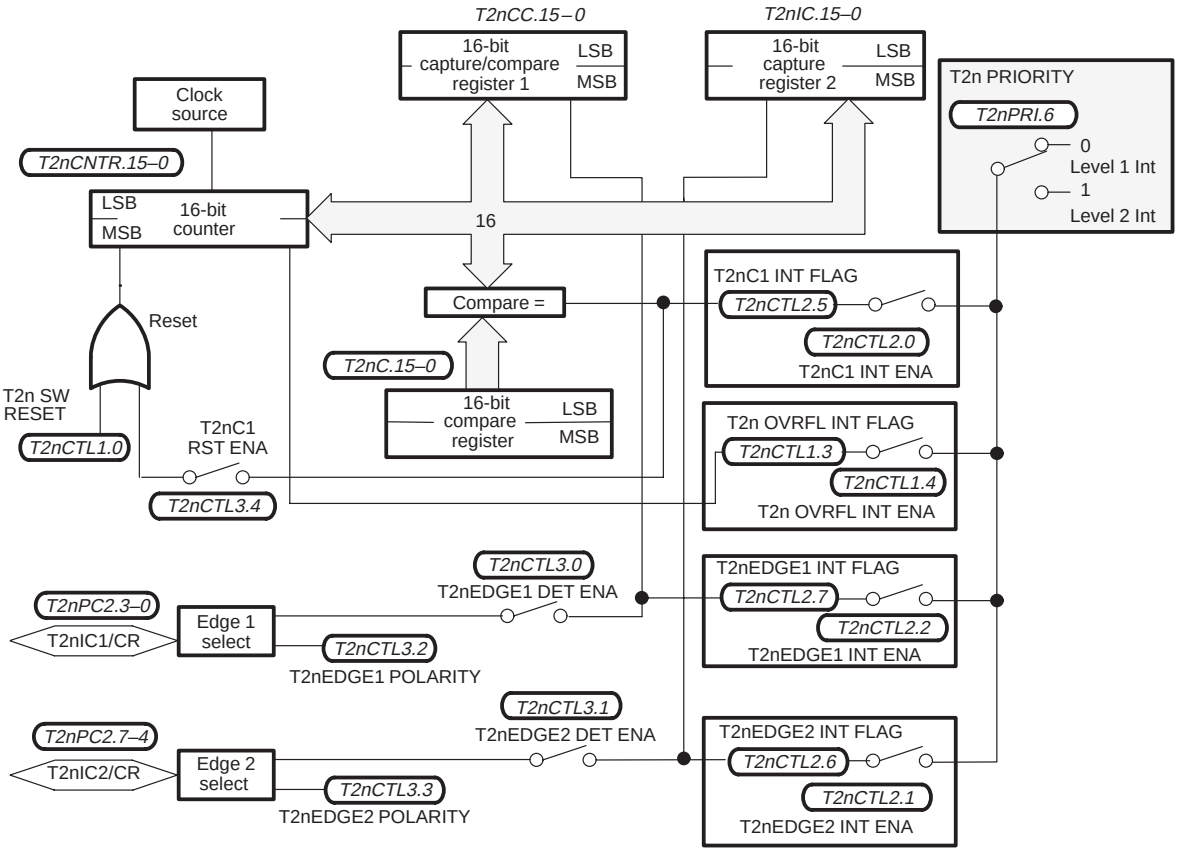

PETITIONER ECOBEE
EX. 1010

References

Linear and Interface Circuits Applications, SLYA003, Texas Instruments Incorporated, 1987.

TMS370 Family User's Guide, SPNU127, Texas Instruments Incorporated, 1996.

PETITIONER ECOBEE
EX. 1010

C

capture register: A T1 or T2n register that is loaded with the 16-bit counter value when an external input transition occurs. Either edge of the external input can be configured to trigger the capture.

CLKIN: The external oscillator frequency (20 MHz maximum)

compare register: The compare register, in the T1 or T2n module, contains a value that is compared to the counter value. The compare function triggers when the counter matches the contents of the compare register.

E

edge detection: Edge detection circuitry senses an active pulse transition on a given timer input and provides appropriate output transitions to the rest of the module. The active transition can be configured to be low to high or high to low.

event count: A T1 or T2n clock source option where the timer is clocked from the rising edge of a signal on an external pin (T1EVT or T2nEVT).

EEPROM: Electrically erasable programmable read-only memory; has the capability to be programmed and erased under direct program control.

I

interrupt: A signal input to the CPU to stop the flow of a program and force the CPU to execute instructions at an address corresponding to the source of the interrupt. When the interrupt is finished, the CPU resumes execution at the point where the input occurred.

P

PPM: Pulse position modulation; a serial signal in which the information is contained in the frequency of a signal with a constant pulse width. A TMS370 device can output a PPM signal with a constant duty cycle without any program intervention using the T1 or T2n compare registers.

prescale: Circuitry in the T1 module that effectively divides the SYSCLK by a set value. For example, /64 prescale divides the SYSCLK signal by 64.

pulse accumulation: A T1 mode which keeps a cumulative count of SYSCLK pulses as long as the T1EVT pin is high.

PWM: Pulse width modulation; a serial signal in which the information is contained in the width of a pulse of a constant frequency signal. A TMS370 device can output a PWM signal with a constant duty cycle without any program intervention using the T1 or T2n compare features.

PETITIONER ECOBEE
EX. 1010

S

SPI module: Serial peripheral interface module; used to send serial data in a simple bit format to devices such as shift registers.

SYSCLK: The internal system clock period.

W

Watchdog timer: A free-running counter in the T1 module which must be cleared by the program at a set interval. If the program is not working properly, the counter will overflow, causing a system reset.

PETITIONER ECOBEE
EX. 1010

PETITIONER ECOBEE
EX. 1010

Using Input Capture Pins as External Interrupts

Michael S. Stewart
Microcontroller Products — Semiconductor Group
Texas Instruments

PETITIONER ECOBEE
EX. 1010

PETITIONER ECOBEE
EX. 1010

Introduction

The TMS370 family of microcontrollers are typically available with three external interrupt pins.

- INT1: Maskable or non maskable interrupt of general purpose input only pin
- INT2: Maskable interrupt or general purpose bidirectional I/O pin
- INT3: Maskable interrupt or general purpose bidirectional I/O pin

For applications that require more than three individual external interrupts, the timer input capture pins can be used to cause interrupts.

Timer 1 (T1)

The T1IC/CR pin may be configured to operate as an external interrupt. To initialize this pin as an external interrupt, do the following:

1. Select the mode of operation for T1. The T1 MODE (T1CTL4.7) bit can be selected for either dual compare mode or capture/compare mode. The T1IC/CR pin can operate as an external interrupt in either mode.
2. Select the rising edge or falling edge polarity of the interrupt by writing to the T1EDGE POLARITY (T1CTL4.2) bit.
3. Enable the selected edge to set the T1EDGE INT flag by setting the T1EDGE DETECT (T1CTL4.0) bit.
4. Enable the active T1EDGE INT flag to request an interrupt by setting the T1EDGE INT ENA (T1CTL3.2) bit.

Timer 2A (T2A)

The pins T2AIC1/CR and T2AIC2/PWM may be configured to operate as external interrupts. To initialize the T2AIC1/CR pin to cause an external interrupt, do the following:

1. Select the mode of operation for T2A. The T2A MODE (T2ACTL3.7) bit can be selected for either dual compare mode or dual capture mode. The T2AIC1/CR pin can operate as an external interrupt in either mode.
2. Select the rising edge or falling edge polarity of the interrupt by writing to the T2AEDGE1 POLARITY (T2ACTL4.2) bit.
3. Enable the selected edge to set the T2AEDGE1 INT flag by setting the T2AEDGE1 DETECT (T2ACTL4.0) bit.
4. Enable the active T2AEDGE1 INT flag to request an interrupt by setting the T2AEDGE1 INT ENA (T2ACTL3.2) bit.

To initialize the T2AIC2/PWM pin to cause an external interrupt, do the following:

1. Select the dual capture mode of operation for T2A. The T2A MODE (T2ACTL3.7) bit must be set. The T2AIC2/PWM pin can operate as an external interrupt in the dual capture mode only. In the dual compare mode this pin operates as a pulse width modulation (PWM) output pin.
2. Select the rising edge or falling edge polarity of the interrupt by writing to the T2AEDGE2 POLARITY (T2ACTL4.3) bit.

PETITIONER ECOBEE
EX. 1010

3. Enable the selected edge to set the T2AEDGE2 INT flag by setting the T2AEDGE2 DETECT (T2ACTL4.1) bit.
4. Enable the active T2AEDGE2 INT flag to request an interrupt by setting the T2AEDGE2 INT ENA (T2ACTL3.1) bit.

Timer 2B (T2B)

The T2B pins T2BIC1/CR and T2BIC2/PWM may be configured to operate as external interrupts. To initialize the T2BIC1/CR pin to cause an external interrupt, do the following:

1. Select the mode of operation for T2B. The T2B MODE (T2BCTL3.7) bit can be selected for either dual compare mode or dual capture mode. The T2BIC1/CR pin can operate as an external interrupt in either mode.
2. Select the rising edge or falling edge polarity of the interrupt by writing to the T2BEDGE1 POLARITY (T2BCTL4.2) bit.
3. Enable the selected edge to set the T2BEDGE1 INT flag by setting the T2BEDGE1 DETECT (T2BCTL4.0) bit.
4. Enable the active T2BEDGE1 INT flag to request an interrupt by setting the T2BEDGE1 INT ENA (T2BCTL3.2) bit.

To initialize the T2BIC2/PWM pin to cause an external interrupt, do the following:

1. Select the dual capture mode of operation for T2B. The T2B MODE (T2BCTL3.7) bit must be set. The T2BIC2/PWM pin can operate as an external interrupt in the dual capture mode only. In the dual compare mode this pin operates as a PWM output pin.
2. Select the rising edge or falling edge polarity of the interrupt by writing to the T2BEDGE2 POLARITY (T2BCTL4.3) bit.
3. Enable the selected edge to set the T2BEDGE2 INT flag by setting the T2BEDGE2 DETECT (T2ACTL4.1) bit.
4. Enable the active T2BEDGE2 INT flag to request an interrupt by setting the T2BEDGE2 INT ENA (T2BCTL3.1) bit.

NOTE:

Remember that T1, T2A, and T2B all have multiple sources that may cause an interrupt. If multiple sources are enabled to cause an interrupt, the interrupt service routine must poll the individual flag bits to determine the source(s) of an interrupt.

PETITIONER ECOBEE
EX. 1010

Watchdog Design Considerations and Mask Options

Michael S. Stewart
Microcontroller Products — Semiconductor Group
Texas Instruments

PETITIONER ECOBEE
EX. 1010

PETITIONER ECOBEE
EX. 1010

Introduction

Many applications require the presence of a watchdog (WD) timer to increase system integrity. The TMS370 family of microcontrollers provides three different mask options for WD timer functionality.

1. A standard watchdog for ROM-less, EPROM, and mask-ROM devices.
2. A hard watchdog for mask-ROM devices
3. A simple counter for mask-ROM devices

Standard WD

The standard WD counter option on the TMS370 has been designed to be as flexible as possible for a wide range of system designers. The TMS370 WD counter was designed to add a greater level of system integrity to the software operation. External conditions that cause the TMS370 to operate outside the specified ranges may cause the WD counter to lose functionality. It may be used as a WD counter with variable timeout ranges, as an event counter, or as a simple overflow timer. The standard WD timer is designed as part of the Timer 1 (T1) module, and consists of the following functional blocks:

- 16–bit, WD/event counter which provides up to 224 clock cycles between counter resets. The WD counter can be read by the program at locations P046 (MSB) and P047 (LSB).
- Prescaled clock input selection or external clock may be options for clocking the WD counter.
- WD Reset key, which provides protection against illegal counter resets.
- An overflow flag which the program may read following reset to determine if the WD caused the reset.
- Programmable interrupt and system reset.

The standard WD counter option is available on all ROM-less, mask ROM, and some EPROM devices. Mask ROM devices may be selected with the standard WD mask option by selecting the appropriate box in the device New Code Release Form (NCRF). EPROM devices that are represented with the ‘A’ version designator (TMS370C756A for example) are designed with the standard WD counter. All ROM-less devices are available only with the standard WD counter mask option. See the *TMS370 Family User’s Guide* for additional WD operational information.

The flexible design of the TMS370 standard WD counter allows the counter to be used in a wide range of system applications. This flexibility also brings with it certain limitations.

- The WD counter is not enabled on power–up to cause a system reset. However, the first instruction executed can enable the WD counter and select the WD clock source.
- The WD overflow flag must be cleared once set to enable any further WD resets. This means that if the WD counter overflows and causes a reset, the WD OVRFL INT FLAG must be written with a ’0’ to clear the flag, or the WD counter will not cause any additional resets. This would effectively disable the WD counter from causing any additional resets.
- The WD counter is not free standing. In other words, internal circuitry can override the WD reset ability. This was required for testing purposes of the TMS370.

Hard Watchdog Mask Option

The hard WD counter mask option on the TMS370 has been designed to eliminate any features from the standard WD option that could cause the WD to not cause a system reset. The hard WD counter is enabled

PETITIONER ECOBEE
EX. 1010

on reset and cannot be disabled. The hard WD design provides a WD counter that will always cause a system reset if the WDRST key register is not properly written. It may be used as a WD counter with variable timeout ranges based on one of four prescale clock options and the tap select. The hard WD timer is designed as part of the T1 module, and consists of the following functional blocks:

- 16–bit, WD which provides up to 224 clock cycles between counter resets. The WD counter can be read by the program at locations P046 (MSB) and P047 (LSB).
- Prescaled clock input selection for clocking the WD counter.
- WD reset key which provides protection against illegal counter resets.
- An overflow flag which the program may read following reset to determine if the WD caused the reset.
- System reset enabled at all times. No programmable interrupt or system reset enable capability.

NOTE:

Selecting the hard WD mask option enables the external interrupt 1 (INT1) as a non-maskable interrupt (NMI) during a low-power mode. Since the hard WD option is disabled in a low-power mode, any active edge on the external interrupt INT1 will wake-up the microcontroller regardless of the state of the INT1 individual interrupt enable and the global interrupt enable bits.

The hard WD counter option is available on all mask ROM, and some EPROM devices. Mask ROM devices may be selected with the hard WD mask option by selecting the appropriate box in the device NCRF. EPROM devices represented with the ‘B’ version designator (for example TMS370C576B) are designed with the standard WD counter. See section 7.7.2 of the TMS370 Family Data Manual for additional hard WD operational information.

The design of the TMS370 hard WD counter allows the counter to be used only to generate a system reset. Therefore, writes to the WDRST key must occur before the WD can overflow assuming the fastest overflow rate.

Simple Counter

The simple counter option on the TMS370 provides an additional timebase for applications that to not require or desire a WD counter. It may be used as an event counter, or as a simple overflow timer. The simple counter is part of the T1 module, and consists of the following functional blocks:

- A 16-bit counter, which provides up to 224 clock cycles between counter resets. The counter can be read by the program at locations P046 (MSB) and P047 (LSB).
- A prescaled clock input selection or external clock, which are options for clocking the counter.
- An overflow flag, which the program may read following reset to determine if the counter caused the interrupt.

PETITIONER ECOBEE
EX. 1010

- A programmable overflow interrupt.

The simple counter option is available only on mask ROM devices by selecting the simple counter mask option box in the device NCRF. See the *TMS370 Family User's Guide* for additional WD operational information.

The limited design of the TMS370 simple counter allows the counter to be used as an counter overflow interrupt. The actual timebase of the overflow is dependent on SYSCLK speed, tap select, and clock prescale select. This design does not allow a compare feature and limits the counter functionality.

PETITIONER ECOBEE
EX. 1010

PETITIONER ECOBEE
EX. 1010

T1PWM Set-Up Routines

Microcontroller Products—Semiconductor Group
Texas Instruments

PETITIONER ECOBEE
EX. 1010

PETITIONER ECOBEE
EX. 1010

T1PWM Pin Set-Up

This application note provides three T1PWM pin set-up routines:

Routine 1

This routine starts and stops the PWM function with a certain value on the PWM pin. Starting the T1PWM pin with a specific value can be done with one instruction as shown below. The value of the data out bit will become the initial value of the PWM pin.

```
MOV    #60h,P04E            ;Start with PWM pin high

MOV    #20h,P04E            ;Start with PWM pin low
```

Routine 2

This routine shows the two instructions needed to change the T1PWM pin from a PWM pin to a general-purpose output pin with a specific value. The first instruction changes the pin to a general-purpose output pin with the same value as the current PWM pin. The second instruction changes the pin to a particular value.

```
MOV    #50h,P04E            ;Stop with PWM pin high.
MOV    #50h,P04E            ;

MOV    #10h,P04E            ;Stop with PWM pin low.
MOV    #10h,P04E            ;
```

Routine 3

This routine starts and stops the PWM function with the current value on the pin. Starting the function requires four instructions, while stopping the function takes only one.

```
       MOV    #20h,A             ;Start with PWM pin same as
       BTJZ   #80h,P04E,SKIP     ;current state.
       MOV    #60h,A             ;
SKIP   MOV    A,P04E             ;

       MOV    #10h,P04E          ;Stop with PWM pin same as
                                 ;current state.
```


PETITIONER ECOBEE
EX. 1010

PETITIONER ECOBEE
EX. 1010

Part III
Module Specific Application Design Aids

Part III contains six sections:

RESET Operations 99

SPI and SCI Modules 105

Timer and Watchdog Modules 199

Analog to Digital Modules 309

PACT Module 375

I/O Pins 439

PETITIONER ECOBEE
EX. 1010

PETITIONER ECOBEE
EX. 1010

Using the TMS370 ADC1 Module

Henry Kwan
Microcontroller Products—Semiconductor Group
Texas Instruments

PETITIONER ECOBEE
EX. 1010

PETITIONER ECOBEE
EX. 1010

Introduction

To provide advanced performance and cost effective system solutions for complex control applications, the TMS370 family combines an 8-bit CPU containing powerful peripherals such as an Analog to Digital converters, timers, serial peripheral interface, and serial communication interface with on-chip memory: RAM, ROM, EEPROM, and EPROM. Many applications involve the determination of the values of physical parameters, such as temperature, position, and pressure, which must be transformed into electrical analog signals and then converted to digital codes for the controller. With the on-chip ADC1, the TMS370 microcontrollers greatly simplify interactions between the analog world and a digital system. This application report illustrates the operation of the ADC1 on-chip A/D converter and provides some application examples for ADC1 conversions with the TMS370 family microcontrollers.

Many applications involve the determination of the values of physical parameters, such as temperature, position, and pressure, that must be transformed into electrical analog signals and then converted to digital codes for the controller. With the on-chip ADC1, the TMS370 microcontrollers greatly simplify interactions between the analog world and a digital system. This application report illustrates the operation of the ADC1 on-chip A/D converter and provides some application examples for ADC1 conversions with the TMS370 family microcontrollers.

NOTE:
This application report was written for the ADC1 Module. Minor modifications will need to be implemented for ADC2 and ADC3 Modules.

Module Description

The ADC1 converter module is an 8-bit successive approximation converter with internal sample-and-hold circuitry. The module has eight multiplexed analog input channels which allow the processor to convert the voltage levels of up to eight different sources. The ADC1 converter contains three major blocks: an analog (input and reference) multiplexer, successive approximation A/D converter with internal sample-and-hold circuitry, and interrupt logic.

PETITIONER ECOBEE
EX. 1010

Figure 1. ADC1 Converter Block Diagram

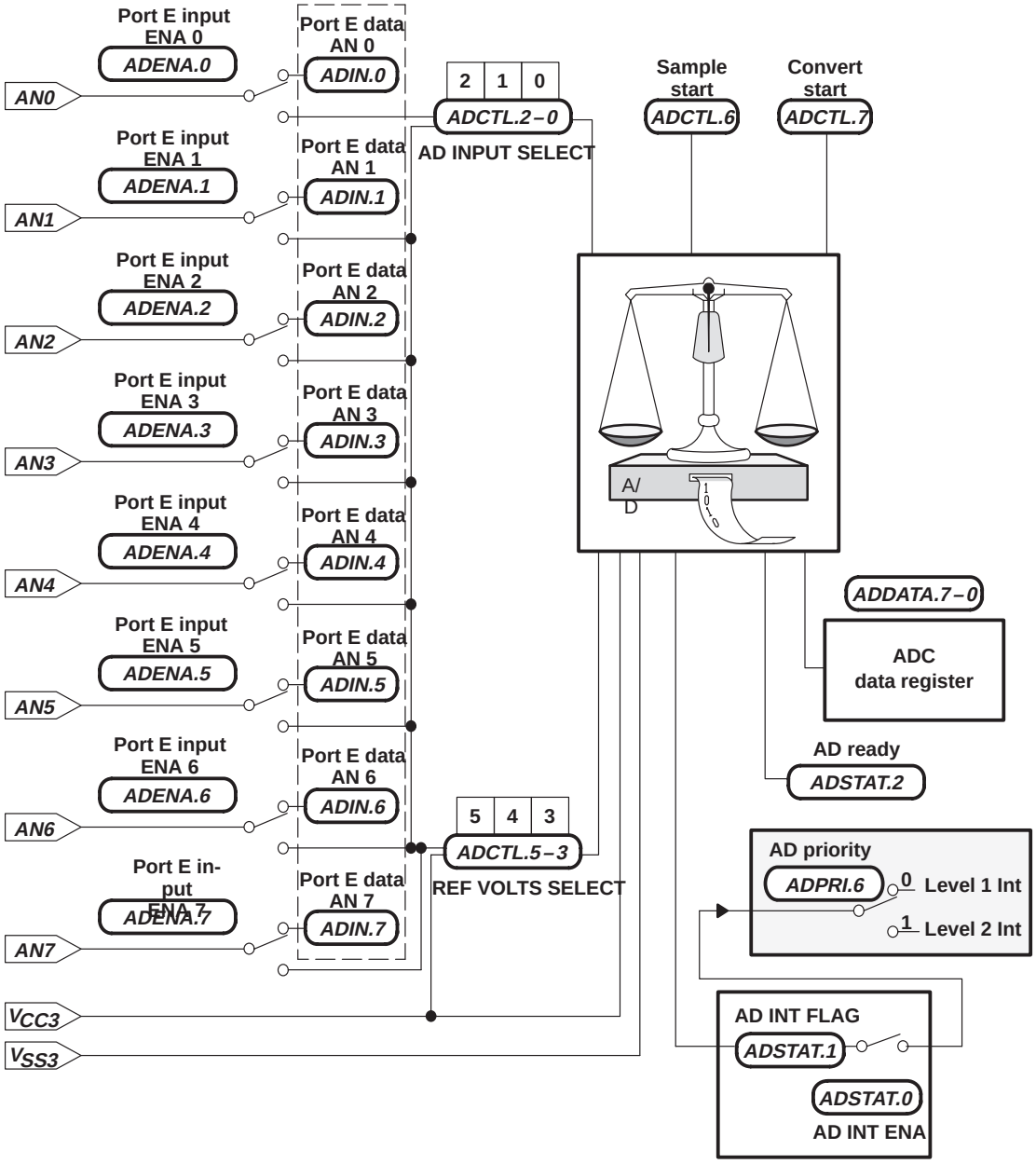

PETITIONER ECOBEE
EX. 1010

Principles of Operation

Successive approximation is one of the most common techniques used in A/D conversion. The technique generates each bit of the digital code sequentially, starting with the MSB, and compares the analog input with binary-weighted values to produce the output in a fixed number of steps. Successive approximation provides an excellent trade-off between resolution, speed, accuracy, and cost.

Figure 2 shows a simplified diagram of the successive approximation A/D converter.

Figure 2. Simplified Model of the Successive Approximation Converter

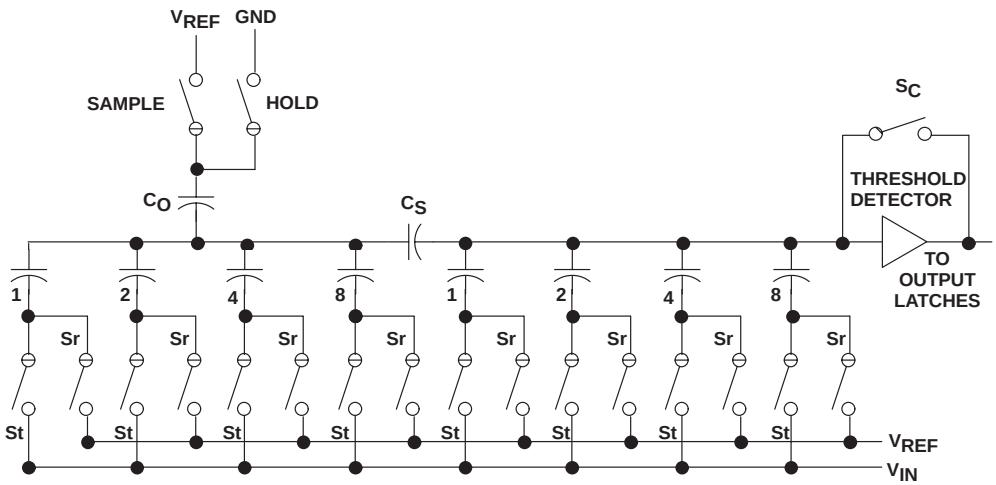

The series capacitor, C_S, effectively divides the value of the left hand side capacitors by 16 to form a binary-weighted capacitor array. The conversion process is accomplished by a sequence of three operations. In the first sequence, called the sample mode, the analog input is sampled by connecting V_{IN} to the analog input, and closing switch S_c and all S_t switches. All capacitors charge up to the input voltage simultaneously during the sampling time. Capacitor C_o is switched to V_{REF} during sample mode. In the second sequence, the hold mode, capacitor C_o is switched to GND; switch S_c is opened, and V_{IN} is connected to GND. In the third sequence, the redistribution mode begins by identifying the charge on each capacitor relative to the reference voltage.

All eight capacitors are examined separately until all eight bits are determined. The rightmost capacitor (corresponding to MSB) is first switched to the reference voltage, and all of the other capacitors are switched to GND. If the voltage at the summing node is greater than the trip point of the threshold detector, a bit is set in the output register and the capacitor is switched back to GND. If the voltage at the summing node is less than the trip point of the threshold detector, the capacitor remains connected to V_{REF} throughout the remainder of the conversion process. This process is repeated for all eight capacitors.

PETITIONER ECOBEE
EX. 1010

Functional Description

The ADC1 module has ten input pins. Two pins are used for analog voltage supply: V_{CC3} and V_{SS3}. This isolates the ADC1 module from digital switching noise. The other eight pins (AN0–AN7) are used for analog input channels and can be configured as general purpose input pins if not needed. The analog reference can be either V_{CC3} or one of the analog input channels, AN1 to AN7. This allows for ratio measurement of one analog signal to another.

The internal sample-and-hold circuitry is used to maintain the analog input during conversion. This minimizes inaccuracies in the converted value of an analog signal due to changes in the signal's value during the conversion process. The input sampling begins when the SAMPLE START bit (bit 6 of the ADCTL) is set. The application program should allow 1 µs for each kilohm of source output impedance or a minimum of 1 µs for the low-impedance source to sample the analog signal. This allows time to charge the internal capacitor array. When the sampling time is completed, the SAMPLE START and the CONVERT START bit (bit 7 of the ADCTL) are set. The analog signal's value will be held by the ADC1 module for 18 cycles after the CONVERT START bit is set. By that time, the ADC1 module has cleared both the SAMPLE START and CONVERT START bit to signify the end of the internal sampling phase.

After the internal sampling phase, the program can change the input channel without affecting the conversion. The reference voltage should remain constant throughout the conversion. The conversion process takes 164 system clock cycles after the CONVERT START bit is set. Upon completion, the AD INT FLAG will be set. If the AD INT ENA bit is set, the module will generate an interrupt request.

Design Considerations

The following section provides a starting point for the digital designer by offering some hints for the analog interface. For a more thorough discussion of additional analog devices (such as op-amp and filter circuits), refer to additional analog applications literature mentioned in the References section at the end of this report.

ADC1 Input Pin Model

The model of the ADC1 input pin shown in Figure 3 is intended to facilitate your understanding of the effects of interface circuitry on A/D conversion.

PETITIONER ECOBEE
EX. 1010

Figure 3. ADC1 Input Pin Model

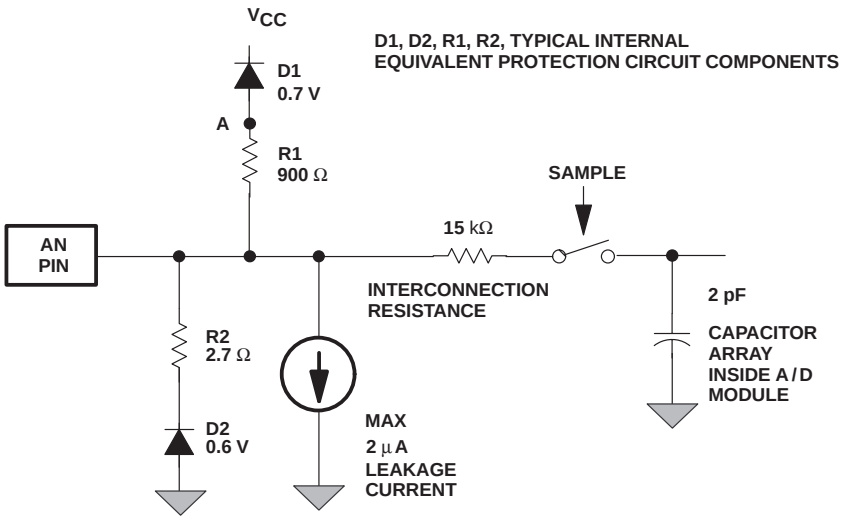

Analog Input Pin Connection

The external pin connection can greatly affect the performance and accuracy of the A/D conversion. Since the ADC1 converter uses the charge redistribution technique to sample the analog signal, there is no need to use external sample-and-hold circuitry. Using an external low-pass filter to reduce system noise may help to prevent errors. Simple noise filtering can be accomplished by adding a resistor and capacitor across the ADC1 inputs as shown in Figure 5 and Figure 6. For inexpensive filtering, C_X acts with R_X to form a first-order, low-pass network. However, the capacitor and resistor size should be chosen carefully to preclude additional system errors.

One of the most common A/D application errors is inappropriate source impedance. Too much source impedance might introduce unexpected system errors, and too little source impedance might cause permanent damage to the ADC1 input pins because of a possible latch-up problem. In practice, minimum source impedance should be used to limit the error as well as minimize the required sampling time; however, source impedance should be large enough to limit the current sufficiently to protect against an overvoltage condition.

PETITIONER ECOBEE
EX. 1010

When the reference voltage, V_{ref}, is at 5.1 V, one LSB corresponds to 20 mV. From the input pin model, the maximum leakage current is 2 μA (see note). That is, for the worst case of 2-μA leakage, current flow through a 1kΩ external resistor will result in a 2-mV voltage drop or induce 0.1 LSB error. If the source impedance induces an error higher than can be tolerated by the system, a buffering device, such as an (op-amps), might be considered.

Latch-up poses a different problem for the input pin connection. Latch-up is the uncontrolled flow of current through the parasitic silicon controlled rectifier (SCR) inherent in all CMOS devices. This SCR might be triggered into a low-impedance state, resulting in excessive supply current. Once the SCR is triggered, the current flow is limited only by the impedance of the power supply and the forward resistance of the SCR. An external resistance should be used to limit the current flow through the ADC1 pin so that the current is never high enough to cause CMOS latch-up. The source resistance will depend on the total system.

The absolute maximum rating of the analog pin should not exceed the values specified in the electrical specification. The input voltage range should be within –0.3 to 7 V, and the input current should be within ± 10 μA.

Suppose, for example, the analog input signal is shorted to 12V, the worst case for an application. An external resistor would be required to limit the input voltage below 7 V to protect the input pin from damage. Also, the internal diode to V_{CC} (5 V) would clamp the voltage at node A (see Figure 3) at 5.7 V. Let X be the resistance of the external resistor. Therefore,

$$\frac{12 - 7}{X} = \frac{12 - 5.7}{900 + X}$$

$$\text{or} \quad X = 3.46\ \text{k}$$

It is suggested that the designer add in some guard band for tolerance of the internal resistance and fluctuations of the external power supplies. The designer may also consider using external clamping diodes to limit the analog voltage range between V_{SS3} and 7 V. However, if clamping diodes are used, the leakage current induced by the diodes should be kept as low as possible.

If an external capacitor is added to form a low-pass filter, the capacitance value should be chosen carefully. The capacitor size mainly depends on the frequency of the analog input signal and the sampling time allowed. Obviously, the RC time constant needs to be large enough to filter any undesirable noise signal, but it must be expected that the external filter also introduces a delay between the analog source and the ADC1 input pin. It is important to make sure that the RC time constant is much smaller (for example, 10 times smaller) than the sample time to allow the internal capacitor array to become fully charged within the sampling window. Adding an external capacitor can also increase protection in case an overvoltage condition occurs. In combination with the external resistor, the external capacitor limits the rise time of large spikes so that the diode can clip them before they do any damage.

NOTE: Absolute resolution = 20 mV. At V_{ref} = 5 V, this is one LSB. As V_{ref} decreases, LSB size decreases; therefore, the absolute accuracy and differential/integral linearity errors in terms of LSBs increase.

PETITIONER ECOBEE
EX. 1010

Analog Input Conditioning

For applications dealing with stringent conditions, one might consider adding op-amps or related devices for signal conditioning, for example: buffering, amplification, level translation, linearization, or current-to-voltage conversion. The following figure and table show the op-amp symbol and some key op-amp parameters.

Figure 4. Operational Amplifier

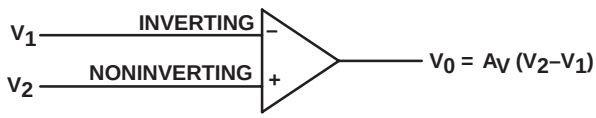

Table 1. Key Op-Amp Parameters

Key Parameters	Description	Ideal Op-amp
Input Resistance	Resistance at either input of the op-amp (load of the source)	Infinity
Output Resistance	Source impedance of the output stage	0
Differential Voltage Gain or Open-Loop Voltage Gain (Av)	The ratio of the input voltage to output voltage without external feedback	Infinity
Slew Rate (V/µs)	Response time of the op-amp's output (rise and fall time)	Infinity
Common Mode Rejection	Ability to limit a response to a common mode voltage (noise rejection)	Infinity
Bandwidth	Frequency response of the op-amp	Infinity

Op-amps can be configured to perform a large number of functions. Because of their variable characteristics and wide range of adaptability, they are very handy for analog signal interfacing. Two popular input buffer configurations for the op-amp are shown in Figure 5 and Figure 6.

The noninverting configuration provides amplification of small input signals and provides low source impedance for the ADC1 converter. The inverting amplifier configuration affords convenient scaling of negative input for the ADC1 converter (the ADC1 module does not convert input below the value of V_{SS3}). Resistors R_1 and R_2 determine the transfer function (gain) of the amplifier circuitry. Resistor R_3 (equivalent to R_1 in parallel with R_2) is included to correct the dc offset caused by internal input offset or input bias current. Some op-amps like LinCMOS (TLC272) provide extremely low input bias performance, thus eliminating the need for bias compensation resistors and thereby simplifying the interface circuits. Some op-amps also provide additional terminals for input offset or frequency compensation.

PETITIONER ECOBEE
EX. 1010

Figure 5. Noninverting Buffer for Analog Input Pin

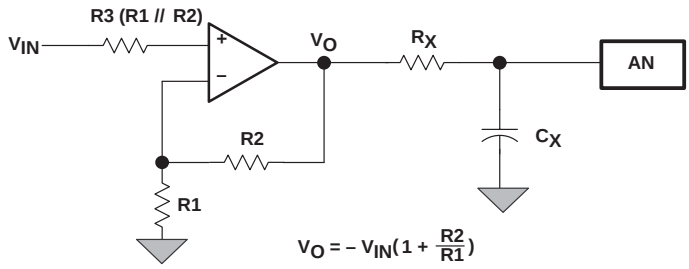

Figure 6. Inverting Buffer for Analog Input Pin

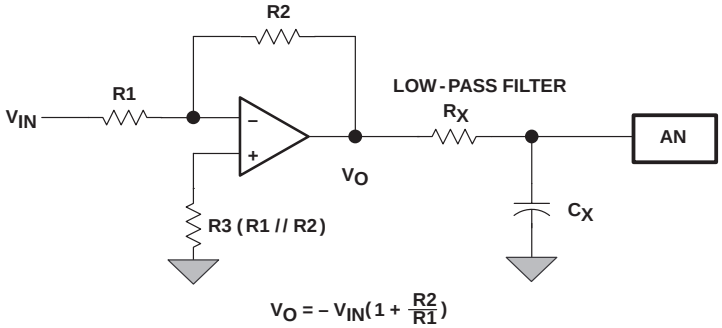

With these two basic configurations, the resistance value and reference can be manipulated to provide optimal scaling and range offsetting of the input signal for A/D conversion. For example, in Figure 7 the output of a transducer, with an output of range 2.5 to 12.5 V, might be offset by 2.5 V [(2.5 V to 12.5 V) - 2.5 V], and then scaled down 0.5 (R / 2R) by the amplifier to provide 0 to 5 V input signals to the ADC1 converter.

Figure 7. Range Offsetting and Scaling

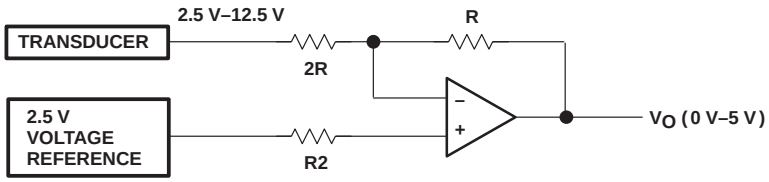

The bridge amplifier is another very popular interfacing circuit especially applicable with input transducers. Transducers, like strain gauges and thermistors, simply produce a varying resistance over a range of parameter (pressure or temperature) changes. Figure 8 shows a typical bridge amplifier circuit. A bridge consists of four terminal elements, one of them (resistance) is variable by a factor of 1 + X, where X is a fraction as a function of other parameters (for example, temperature and pressure). The bridge amplifier measures the deviation of the resistance (good common mode rejection) from the initial value as an indication of change of the parameter (temperature).

PETITIONER ECOBEE
EX. 1010

Figure 8. Bridge Amplifier

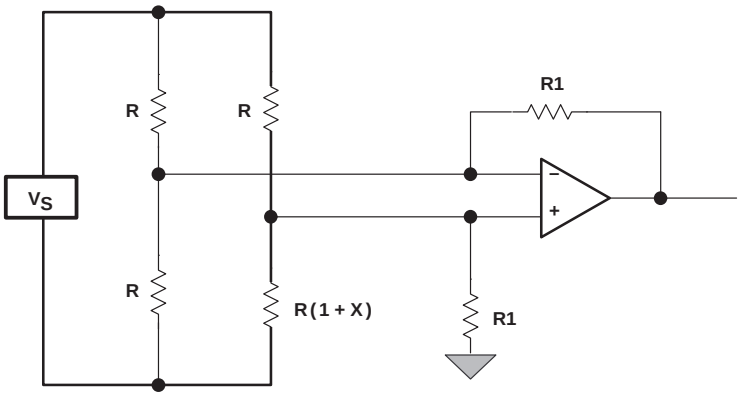

Other basic operational amplifier circuits which might be configured with the ADC1 module can provide different types of signal conditioning for different applications. For example,

- A unit gain voltage follower can be used as an input buffer to the ADC1 converter,
- A current amplifier can provide current to a voltage converter
- A low-pass filter can reduce system noise to achieve a better A/D conversion accuracy
- A logarithmic amp can compress the input signal from several orders of magnitude to a nonlinear input signal with a fixed percent of relative accuracy throughout the required range

For more information, refer to linear circuits application manuals and literature in the References section of this report.

PETITIONER ECOBEE
EX. 1010

Resolution

Some applications may need more resolution than an 8-bit A/D converter can provide. One way to get around this problem is to apply scaling and offsetting in order to manipulate the input signal and use more than one channel for conversion as shown in Figure 9.

Figure 9. Example of Interface Circuit to Increase Resolution to Nine Bits

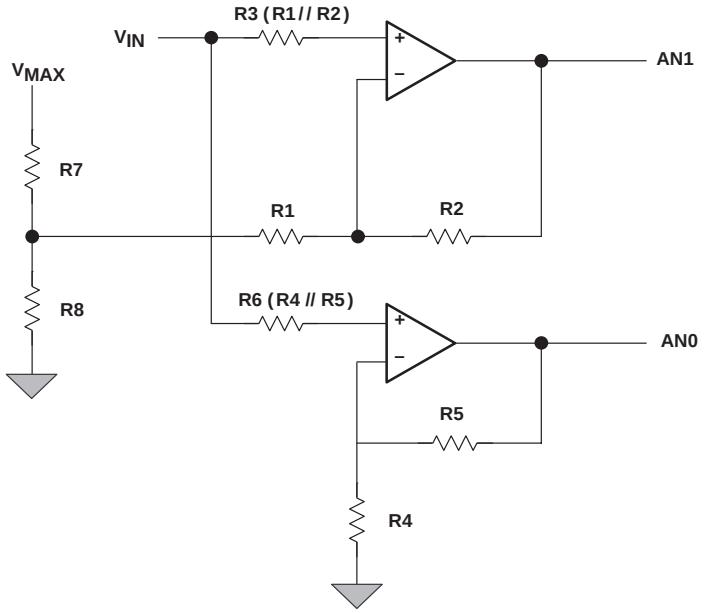

The input signal is split into two ranges: one channel converts the input signal from 0 to $V_{MAX}/2$, while the other channel converts the input signal from $V_{MAX}/2$ to V_{MAX}. The following discussion describes an application that requires the conversion of an input signal from 0 to 5 V, with 10 mV resolution per step.

Resistors R_1, R_2, R_4, and R_5 are set to provide a gain of two for the amplifier. Resistors R_7 and R_8 form a voltage divider to provide an offset of 2.5 V ($V_{MAX}/2$) for the op-amp. When the input signal is within the range 0 to 2.5 V, channel AN0 provides the conversion result (8-bit digital output) with the MSB (bit 8, the extra bit) equal to 0. The output of channel AN1 will be zero because of the offset. When the input signal is within the range 2.5 to 5 V, channel AN1 provides the conversion result (8-bit digital output) with the MSB (bit 8, the extra bit) equal to 1. The output of channel AN0 will be FF (its full scale value). The user should note that when the input signal is within the range 2.5 to 5 V, the output of channel AN0 can be clamped to V_{CC} + 0.3 V by using a protection diode.

Usually, additional variable resistors are needed to adjust the gain and offset of the amplifiers. However, with on-chip EEPROM, the gain error can be compensated for without adjusting the external resistor. The precise value of the resistor is not important. The amplifier can be calibrated with known input values, and the actual gain of the circuit is calculated and stored in the EEPROM. The actual value of the conversion result can be calculated based on this gain factor.

You can also avoid adjusting the offset of the amplifier by sacrificing the resolution. Resistors R_7 and R_8 are chosen so that the ranges are overlapping. In that case, the exact values of the resistors (offset of the

PETITIONER ECOBEE
EX. 1010

op-amp) are not important. You can also use an additional op-amp or increase the gain of the amplifier to compensate for overlapping.

Figure 10. Transfer Characteristics of the Interface Circuit

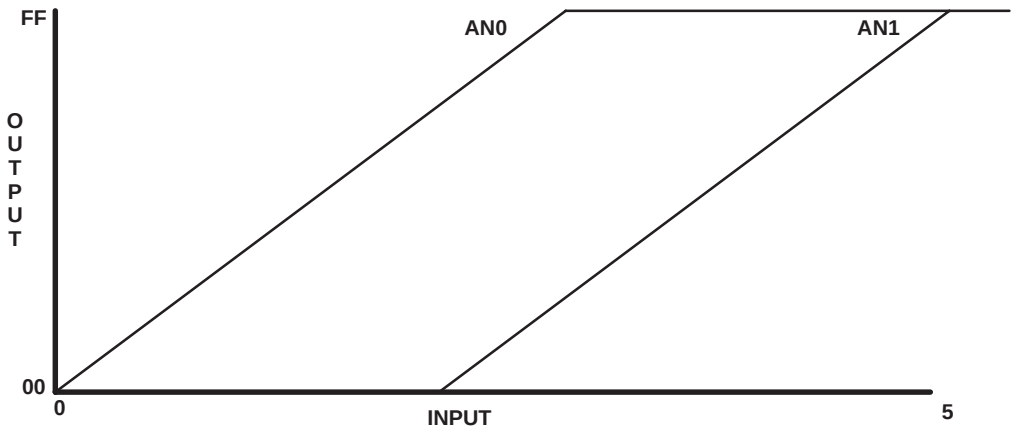

Another technique used to increase the effective resolution is oversampling. The digital output is determined by averaging several conversion results. The transition noise or uncertainty can be greatly reduced. For some applications, pseudorandom noise might be injected into the input and the average of many conversions computed to determine the digital output. The integral of the pseudorandom noise is zero over a long period of time. When the pseudo noise is injected, the conversion result varies by some number of LSBs from a nominal value (see Figure 11). The final average value depends on where the original input signal lies within the code width of the converter. If the input signal is not at the center of a code, the computed average will show either a negative or positive offset from the center.

Figure 11. Injecting Noise into the Input Signal

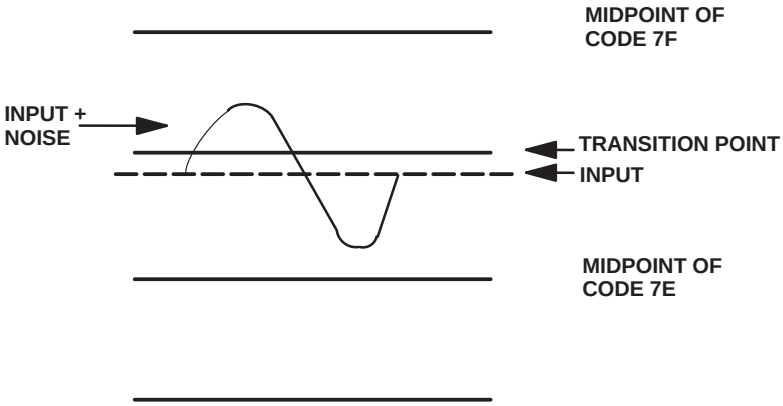

Another technique used to increase effective resolution is the two step subranging conversion. The ADC1 converter first generates the most significant eight bits of the digital value of the input signal. A fast, very

PETITIONER ECOBEE
EX. 1010

high accuracy D/A converter uses the most significant six bits(with the least significant bits set to zero) to generate a precise analog signal, which is then subtracted from the input. The difference is then amplified and digitized to provide the additional least significant bits. The accuracy of the result depends on the accuracy of the generated analog signal.

Figure 12. Block Diagram of Two Step Subranging Conversion

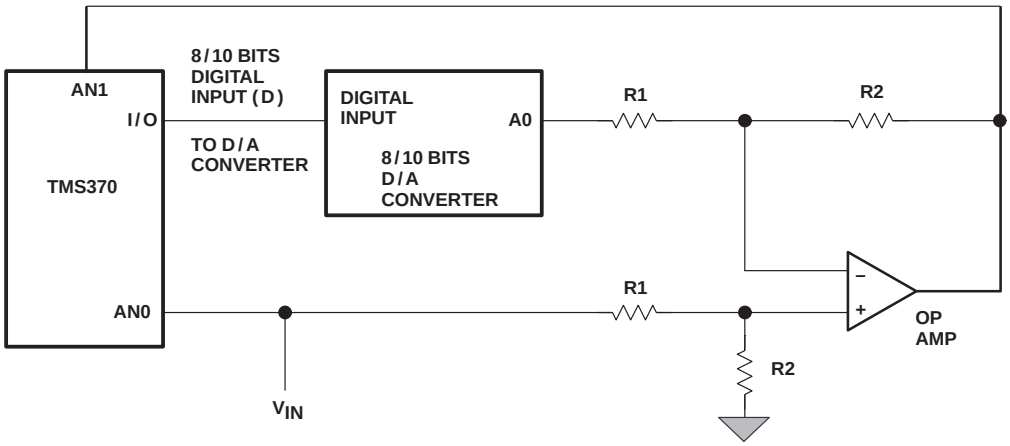

Ratiometric Conversion

Ratiometric conversion is another way to obtain greater output resolution if the maximum of the input signal is less than V_{CC3}. In ratiometric conversions, the conversion result is the ratio of the reference voltage, $V_{REF,}$ to the analog input signal. In other words, the absolute value of the analog input is of no particular concern, but the ratio of the output to the full-scale value is important. The analog reference (maximum of the input signal) can be one of the analog input channels AN1 to AN7. This allows maximum full-scale utilization of the ADC1 converter. However, the absolute accuracy of the ADC1 converter is tested at V_{REF} equal to 5.1 V. The absolute accuracy will decrease when V_{REF} is below 5.1 V in the ratiometric conversion.

Sampling Frequency

Sampling frequency is the rate at which the conversions take place. This factor can greatly affect system performance. The application or ultimate use of the converted data determines the required sampling frequency.

Consider the following example of a case in which an analog input signal is sampled at a frequency much lower than the frequency of the actual signal. The resultant frequency is the alias of the original. Figure 13 illustrates the aliasing error caused from an insufficient number of samples.

PETITIONER ECOBEE
EX. 1010

Figure 13. Aliasing Signal Caused by Inadequate Sampling Rate

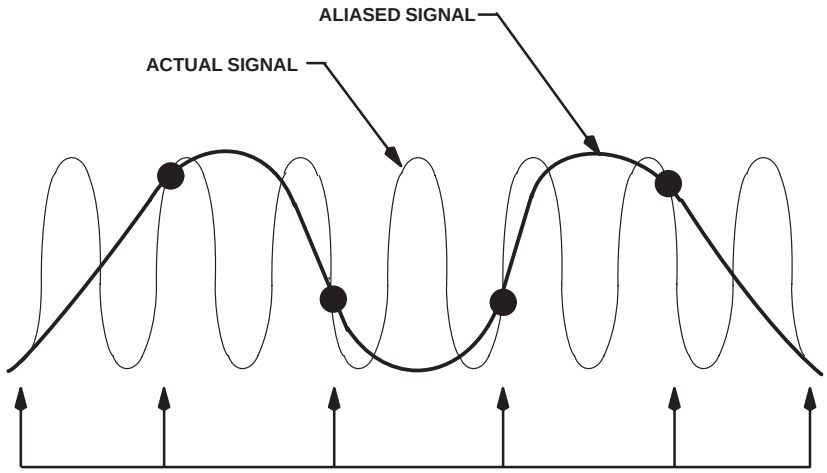

When sampling an analog signal, the Nyquist criterion must be used in order to reproduce the sampled data with no loss of information. The Nyquist criterion requires that the sampling frequency must be greater than twice that of the highest frequency to be sampled.

On the other hand, sampling the input signal at a much higher rate than its input frequency can reduce the system throughput due to poor CPU utilization. Choose the sampling frequency carefully to obtain an optimal solution.

The ADC1 takes 164 cycles to convert the analog input to a digital result. If the controller operates using a system clock frequency of 5 MHz, the conversion will take 32.8 µs. The ADC1 module allows a programmable sampling time depending on the system application. Allow 1 µs sampling time for each kilohm of source impedance or a minimum of 1 µs for a low impedance source. Assuming the analog source impedance is less than or equal to 1 kilohm for minimum sampling time (the sampling time is limited by the instruction cycle time to set up the SAMPLE START bit; the minimum sampling time is 1.6 µs using a 5 MHz SYSCLK). In that case, the ADC1 can convert an analog input in every 34.4 µs for a maximum conversion rate of 29,069 conversions per second.

To meet the Nyquist criterion, the maximum frequency of the input signal must be limited to approximately 14 kHz.

In multi-sensor systems, the ADC1 uses time-multiplexing techniques to scan between inputs from various sensors. When these techniques are used, the scan frequency must take into account the number of channels, so that the ADC1 captures changes occurring at the fastest rate of interest for a given signal.

Analog Reference and Layout Considerations

We have discussed various techniques using signal conditioning and filtering to improve system accuracy. It is important to observe that no filter is justifiable as a substitute for proper attention to layout and shielding techniques. Rather, it is adjunct to them. Every effort should be made to keep noise out of the

PETITIONER ECOBEE
EX. 1010

system. Filtering is added to the system only if it becomes necessary to clean up the remaining undesirable noise, especially that present in the original signal.

To minimize noise and digital clock coupling to an input which might be causing conversion errors, the lead to the analog input should be kept as short as possible. Furthermore, a low impedance shield between the noisy signals and the analog input signal can be used to block out the capacitor coupling effect.

Digital ground lines are usually quite noisy and have a large current spike. All analog grounds should be run separately from the digital ground line to make sure that there are no common impedance earth paths with digital ground or other circuits (as shown in Figure 14 and Figure 15). Analog ground should be connected to a low impedance point near the power supply. During the conversion, current flow into the analog ground can be changed with a high impedance in the ground line. Such changes can cause changes in voltage at the analog ground pin (V_{SS3}), and they might cause conversion errors near the transition point.

Figure 14. Circuit with Common Impedance Earth Path

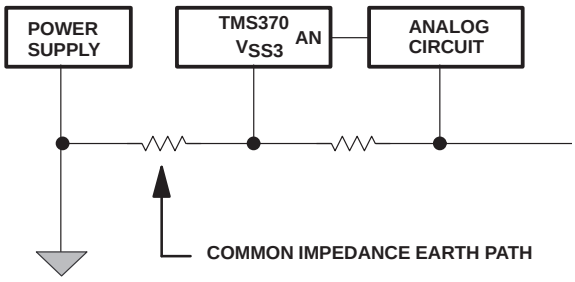

Figure 15. Circuit With No Common Impedance Earth Path

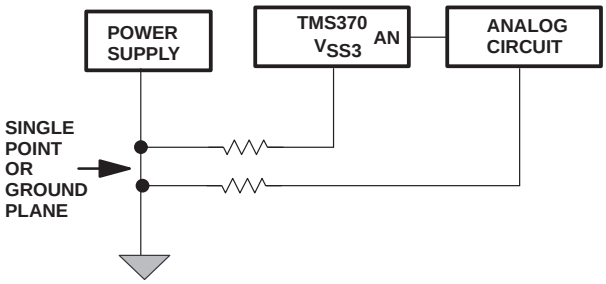

PETITIONER ECOBEE
EX. 1010

Supply transients should be prevented by good decoupling practice; that is, by having a decoupling capacitor close to the V_{CC3} and V_{SS3} pins. The reference voltage (V_{REF}) can also affect the conversion accuracy. It should be kept clean, well filtered, and used only by the ADC1 converter if possible. V_{REF} can be from 2.5 V to V_{CC3} + 0.1. However, it is important to note that the absolute accuracy is only tested at V_{REF} equal to 5.1 V, and as V_{REF} decreases, the LSB size decreases and the absolute error in term of the LSB may increase.

The source impedance (Z_{REF}) of V_{REF} (Figure 16) should not exceed the value specified in the electrical specification (24 kΩ for SYSCLK less than 3 MHz and 10 kΩ for SYSCLK higher than 3 MHz). During the conversion process, the reference voltage charges and discharges the capacitor array to determine the conversion value. If the reference voltage source impedance is too high, it will limit the currents appropriately charging or discharging the capacitor array, and this will cause conversion errors.

Figure 16. Reference Voltage Source Impedance

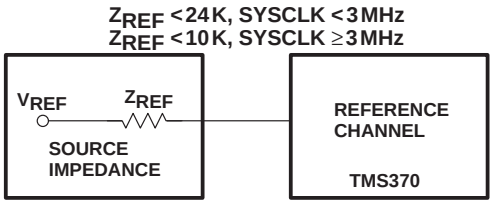

PETITIONER ECOBEE
EX. 1010

Software Routines

The following TMS370 software routine examples show various uses of the ADC1. The register equate directives shown below are common for all examples.

Common Equates

```
ADCTL     .EQU   P070                    ;Analog control register
ADSTAT    .EQU   P071                    ;Analog status and interrupt register
ADDATA    .EQU   P072                    ;Anolog conversion data register
ADIN      .EQU   P07D                    ;Analog port E data input register
ADENA     .EQU   P07E                    ;Analog port E input enable register
ADPRI     .EQU   P07F                    ;Analog itnerrupt priority register
```

Single Channel Continuous Conversion

The first program example performs a single channel conversion. The sampling frequency is controlled by using the on-chip timer, and the digital results are stored in a table beginning at ATABLE (eight bytes long). The conversions continue with the data updated in a round robin fashion. APNTR is the pointer to the most recently converted result. The channel assignments for this program are:

- Analog input channel: AN0
- Ref channel: V_{CC3}

Figure 17. APNTR Pointer

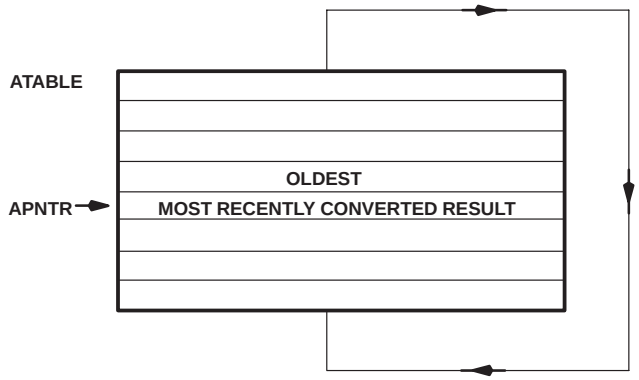

We have shown that the maximum sampling frequency is limited by the conversion rate of the ADC1 and the Nyquist criterion. With a SYSCLK of 5 MHz, the maximum conversion rate is 29,069 conversions per second, or the maximum frequency of the input signal according to the Nyquist criterion is limited to approximately 14 kHz. However, this only shows the maximum conversions that the ADC1 can handle. You should also consider the software overhead required to initiate a conversion and any processor loading that might affect how fast the conversion data will be processed.

This example routine sets up the timer to generate an interrupt at a rate of 10 kHz. The interrupt routine initiates an A/D conversion. That is, one conversion occurs for every 100 µs. Assuming the system clock period is 200 ns, the timer will be set to a period of 500 (01F4h) counts.

PETITIONER ECOBEE
EX. 1010

The following section sets up the table (ATABLE) and the control registers for the ADC1.

```
       .REG      ATABLE,8            ;8 BYTE TABLE THAT STORES CONVERTED DATA
       .REG      APNTR               ;POINTER TO MOST RECENTLY CONVERTED DATA
T1C    .EQU      P043                ;LSB TIMER COMPARE REGISTER
T1CTL1 .EQU      P049                ;TIMER COUNTER CONTROL REG 1
T1CTL2 .EQU      P04A                ;TIMER COUNTER CONTROL REG 2
T1CTL3 .EQU      P04B                ;TIMER INTERRUPT CONTROL REG
T1CTL4 .EQU      P04C                ;TIMER COUNTER CONTROL REG 4
;
INIT   MOV       #0FEH,ADENA         ;ENABLE AN0 AS ANALOG CHANNEL
       MOV       #01H,ADSTAT         ;SET THE INTERRUPT ENABLE AND
                                     ;CLEAR FLAG
       MOV       #0A0H,B
       LDSP                          ;INITIALIZE STACK POINTER TO 0A0H
                                     ;CLEAR THE TABLE BEFORE CONVERSION
       MOV       #08H,B
       MOV       B,APNTR             ;SET POINTER TO FIRST BYTE
       CLR       A
INIT0  MOV       A,*ATABLE–1[B]      ;CLEAR ALL EIGHT BYTES
       DJNZ      B,#INIT0
```

The following section sets up the on-chip timer to control the sampling frequency. The conversion period is loaded into the timer compare register (T1C). When the counter (T1CNTR) matches the T1C, an interrupt request will be generated. The timer interrupt service routine will initiate an A/D conversion and set up the time for the next conversion in the compare register. For more detailed information about the T1C, see the *TMS370 Family User's Guide.*

```
;
;   SET UP THE TIMER COMPARE FUNCTION TO CONTROL THE SAMPLING FREQ
;
       MOV       #00H,T1CTL1         ;SET TIMER CLOCK TO SYSTEM CLOCK
       MOV       #090H,T1CTL4        ;SET TIMER TO CAPTURE/COMPARE MODE
                                     ;SET COMPARE RESET ENABLE
       MOV       #HI(500-1),T1C–1    ;SETUP THE SAMPLING TIME IN COMPARE
                                     ;REGISTER
       MOV       #LO(500-1),T1C
       MOV       #01,T1CTL2          ;RESET TIMER TO ZERO
       MOV       #01,T1CTL3          ;ENABLE COMPARE 1 INTERRUPT
;
;   MAIN PROGRAM
;
```


PETITIONER ECOBEE
EX. 1010

```
;   THE ANALOG INPUT SIGNAL IS SAMPLED AND CONVERTED
;   CONTINUOUSLY AT A RATE OF 10 KHZ
;
;
```

The following section is the timer interrupt routine. It sets up the time for the next conversion in the compare register and initiates the A/D conversion. The address of the label T1SERV must be placed in the interrupt vector table located at 7FF4h and 7FF5h.

```
;
;         INTERRUPT ROUTINE FOR TIMER COMPARE
;
T1CINT    .DBIT  5,T1CTL3            ;NAMED T1 COMPARE INTERRUPT FLAG
T1SERV    SBITO  T1CINT              ;CLEAR INTERRUPT FLAG
SAMPLE    MOV    #040H,ADCTL         ;START SAMPLING (APPROX. 2uS DELAY
                                     ;FOR CLOCKIN = 20 MHZ)
          MOV    #0C0H,ADCTL         ;START CONVERSION
          RTI
```

The following section is the ADC1 interrupt routine. It saves the conversion results in the ATABLE and sets the pointer to the next available location. The address of the label ATOD must be placed in the interrupt vector table located at 7FECh and 7FEDh.

```
;
;         INTERRUPT ROUTINE FOR ADC1
;
ADFLAG    .DBIT  1,ADSTAT            ;NAMED THE INTERRUPT FLAG AS ADFLAG
ATOD      PUSH   A                   ;SAVE THE REGISTERS
          PUSH   B
          SBIT0  ADFLAG              ;CLEAR THE INTERRUPT FLAG
          MOV    APNTR,B             ;GET THE CURRENT POINTER
          MOV    ADDATA,A            ;GET THE CONVERSION RESULTS
          MOV    A,*ATABLE-1[B]      ;SAVE THE RESULT IN THE TABLE
          DJNZ   APNTR,EXITAD        ;CHECK FOR WRAP AROUND
          MOV    #08H,APNTR          ;START FROM LOCATION ATABLE(7)
EXITAD    POP    B                   ;RESTORE REGISTER
          POP    A
          RTI
;
;         INIT INTERRUPT VECTORS
          .SECT  "vect",7FECH
          .WORD  ATOD,0,0,0,T1SERV,0,0,0,0,INIT
```


PETITIONER ECOBEE
EX. 1010

Multiple Channel Conversions

The second example program samples and converts data from four channels, each of which uses a different channel for reference input. The program stores the results in a table beginning at ATABLE. The routine stops interrupting the main program after it finishes all four channels. If the main program wants more recent data, it only needs to execute the code SAMPLE, and the routine will again sample and convert all four channels of data. The ADC1 interrupt enable bit is cleared by the ADC1 interrupt routine as a signal to the main program that all four channels have been processed. The address of the label ATOD must be placed into the interrupt vector table located at 7FECh and 7FEDh.

Table 2. Analog Input Table

Analog Input Channel	Ref Channel
AN3	AN7
AN2	AN6
AN1	AN5
AN0	AN4

Routine

```
       .REG   ADCHANL                ;KEEP CURRENT CHANNEL NUMBER
       .REG   ATABLE,4               ;4-BYTE TABLE THAT STORES CHANNEL DATA
INIT   MOV    #00H,ADENA             ;ENABLE AN0 - AN7 AS ANALOG CHANNEL
       MOV    #0A0H,B
       LDSP                          ;INITIALIZE STACK POINTER
;
;      INITIALIZE THE TABLE FOR CONVERSION RESULTS
;      CLR    A
       MOV    #04,B                  ;INIT THE TABLE
INIT0  MOV    A,*ATABLE–1[B]
       DJNZ   B,INIT0
       EINT                          ;ENABLE INTERRUPTS
       CALL   SAMPLE                 ;SAMPLE ALL THE DATA
;
;
;
;      MAIN PROGRAM
;
;
;      CHECK THE CONVERSION COMPLETED BEFORE USING THE DATA
;
```


PETITIONER ECOBEE
EX. 1010

```
WAITC     BTJO   #01H,ADSTAT,WAITC
;
;      ALL CONVERSIONS HAVE BEEN DONE, RESULTS ARE READY
;      READ DATA HERE
;
;
          CALL   SAMPLE                 ;SAMPLE ANOTHER SET OF DATA
;
;
```

The following section is the subroutine to initiate the first A/D conversion. When the conversion is completed, an interrupt request will be generated. Subsequent conversions will be driven by the interrupt routine.

```
;
;         SUBROUTINE SECTION
;
SAMPLE    MOV    #3BH,ADCHANL        ;RESET THE CHANNEL SELECTION FOR
                                     ;NEW SET OF CONVERSION
          MOV    #01H,ADSTAT         ;ENABLE THE INTERRUPT AND CLEAR
                                     ;ANY FLAGS
          MOV    #07BH,ADCTL         ;START SAMPLING (APPROX. 2uS DELAY
                                     ;FOR CLOCKIN – 20 MHZ)
          MOV    #0FBH,ADCTL         ;START CONVERSION
          RTS
```

The following section is the ADC1 interrupt routine. It saves the conversion result in the ATABLE and initiates another conversion. If it does not, all four channels have already been processed.

```
;
;         INTERRUPT ROUTINE FOR ADC1
;
ATOD      PUSH   A                   ;SAVE THE REGISTERS
          PUSH   B
          MOV    #01,ADSTAT          ;CLEAR THE INTERRUPT FLAG
          MOV    ADCHANL,B           ;GET THE CURRENT CHANNEL NUMBER
          AND    #07H,B              ;GET ANALOG INPUT CHANNEL ONLY
          INC    B
          MOV    ADDATA,A            ;GET THE CONVERSION RESULTS
          MOV    A,*ATABLE–1[B]      ;SAVE THE RESULT IN THE TABLE
          DJNZ   B,NEXTCON           ;GO TO NEXT CONVERT
```


PETITIONER ECOBEE
EX. 1010

```
ENDCON    AND    #0FEH,ADSTAT          ;CLEAR THE INTERRUPT ENABLE
                                       ;TO SIGNAL THE END OF 4 CONVERSIONS
          JMP    EXITAD
NEXTCON   SUB    #09H,ADCHANL          ;SET THE NEXT REFERENCE CHANNEL AND
                                       ;ANALOG INPUT CHANNEL
          MOV    ADCHANL,ADCTL         ;SET UP INPUT AND REF CHANNEL
          OR     #40H,ADCTL            ;START SAMPLE DATA
          OR     #0E0H,ADCTL           ;START CONVERSION
EXITAD    POP    B                     ;RESTORE REGISTER
          POP    A
          RTI
;
;         INIT INTERRUPT VECTORS
          .SECT  "vect",7FECH
          .WORD  ATOD,0,0,0,0,0,0,0,0,INIT
```

The above examples illustrate two basic operations of analog to digital conversion. The first uses the TMS370 timer to control the sampling frequency of conversions, and the second example illustrates multiple channel conversion; that is, using multiple input and reference sources.

The routines can be easily extended to multiple channel conversions with the on-chip timer controlling the sampling frequency. In some cases, the user may even want different sampling frequencies for different channels to account for any disparity in the frequencies of the input signals.

One way to achieve this is to set the time base (output compare function) to the period of the fastest sampling frequency. The sampling frequency of slower input signals will be a multiple of this time base. Additional registers may be allocated to indicate the number of timer interrupts that might have occurred since the last conversion of a particular signal (slow input signal). The interrupt routine will determine whether single or multiple conversions will be initiated.

PETITIONER ECOBEE
EX. 1010

Application Examples

The following section shows some A/D conversion applications using the TMS370 family microcontrollers. All hardware is tested only under specific conditions. The user should take all standard precautions when using these circuits in their respective applications.

Data Translation

Many applications involve monitoring physical parameters. Temperature, force, pressure, position, and other parameters must be translated before they can be processed by the microcontroller. Physical parameters are first transformed to analog signals (voltage, current) by transducers. These analog signals are then converted to digital data. However, most of the transfer functions between the physical parameters and the digital output are nonlinear. Calculating the value of the physical parameters from the digital output may be time consuming and severely limit the system throughput.

One way to simplify the interpretation of the converted data is to linearize the analog input before the conversion. Signal conditioning amplifiers, log amplifiers, and other linear circuit techniques can be used. However, analog linearization may not be cost effective or possible for certain applications. Also, analog components suffer aging (gain, offset drift over time) and tolerance problems that can affect system accuracy. Alternatives such as table lookup techniques or linearization algorithms might reduce the need for expensive hardware linearization.

The values of physical parameters can be calculated beforehand and stored in a table. Upon conversion completion, the application software will simply retrieve the value of the parameter by using the conversion result as the index to the table.

Instead of code-by-code conversion, it is also possible to interpret all 256 discrete values (00–FF) with a table of fewer than 256 entries. Values of the function between table values can be determined by interpolation techniques. For example, the conversion output can be split into two fields: the upper N bits are used as an offset to retrieve data from the table, the lower 8 – N bits are used as the weighting factor for interpolation. The value of any conversion result can be expressed as:

Figure 18. Conversion Formula

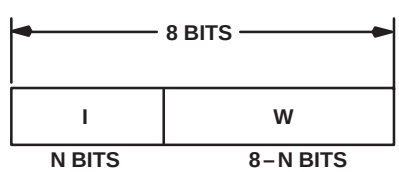

$$F(I.W) = F(I) + \frac{W}{2^{8-N}} [F(I+1) - F(I)]$$

The following program example uses the result of the conversion and the interpolation technique to calculate the value of the physical parameter. The table is 33 bytes long starting at location ATABLE. The most significant five bits of the conversion result are used as the index to the table, whereas the least significant three bits are used as the weighting factor.

$$F(I.W) = F(I) + W/B\,[F(I+1) - F(I)]$$

PETITIONER ECOBEE
EX. 1010

Assuming the conversion result is 01100010 (98), the value of the physical parameter can be calculated by the following equation:

$$F(01100.010) = F(01100) + 2/8[F(01101) - F(01100)]$$

```
          .REG   ATABLE,33              ;33-BYTE TABLE
          .REG   RESULT                 ;REGISTER FOR FINAL RESULT
          .REG   ATPNT                  ;TEMPORARY REGISTER
;
;
BEGIN     PUSH   A                      ;SAVE REG A
          PUSH   B                      ;SAVE REG B
          MOV    ADDATA,ATPNT           ;SAVE THE CONVERSION RESULT
          MOV    ATPNT,B
          SWAP   B                      ;GET THE INDEX FIELD
          RL     B
          AND    #1FH,B
;
;         GET THE VALUE FROM THE TABLE
;
          MOV    *ATABLE[B],A           ;GET F(I)
          MOV    A,RESULT
;
;         CHECK IF INTERPOLATION NECESSARY
;         IF THE MOST LEAST SIGNIFICANT THREE BITS ARE ZERO, NO
;         INTERPOLATION IS NECESSARY
          BTJO   #07H,ATPNT,INTERP
          JMP    FINISH                 ;
INTERP    INC    B                      ;SET INDEX POINT TO NEXT ENTRY
          MOV    *ATABLE[B],A           ;GET F(I+1)
          SUB    RESULT,A               ;CALCULATE THE DIFFERENCE
                                        ;F(I+1) – F(I)
          AND    #07H,ATPNT             ;GET THE WEIGHTING FACTOR
          MPY    ATPNT,A                ;W * [F(I+1) – F(I)]
                                        ;RESULT STORE IN A:B
          MOV    #08,ATPNT
          DIV    ATPNT,A                ;DIVIDE A:B BY 8
          ADD    A,RESULT               ;F(I) + INTERPOLATION VALUE
```


PETITIONER ECOBEE
EX. 1010

```
FINISH    POP    B                        ;RESTORE REGISTERS A AND B
          POP    A
          RTS
```

TMS370 microcontrollers contain on-chip data EEPROM, which provides an excellent area to implement the translation table. With the on-chip EEPROM capability, the translation table can be adjusted for correction as environmental conditions change. Also, the write protection feature of the data EEPROM can be used to protect the translation table from inadvertent overwriting by the application software. For more detailed information about the on-chip data EEPROM, refer to the *TMS370 Family User's Guide*.

PETITIONER ECOBEE
EX. 1010

Temperature Sensor Interface

A typical temperature measurement application is shown in Figure 19. The main principle of this example applies to most other input transducers. The interfacing circuitry consists of a bridge amplifier detecting the resistance variation over the temperature range.

Figure 19. Temperature Sensor Interface

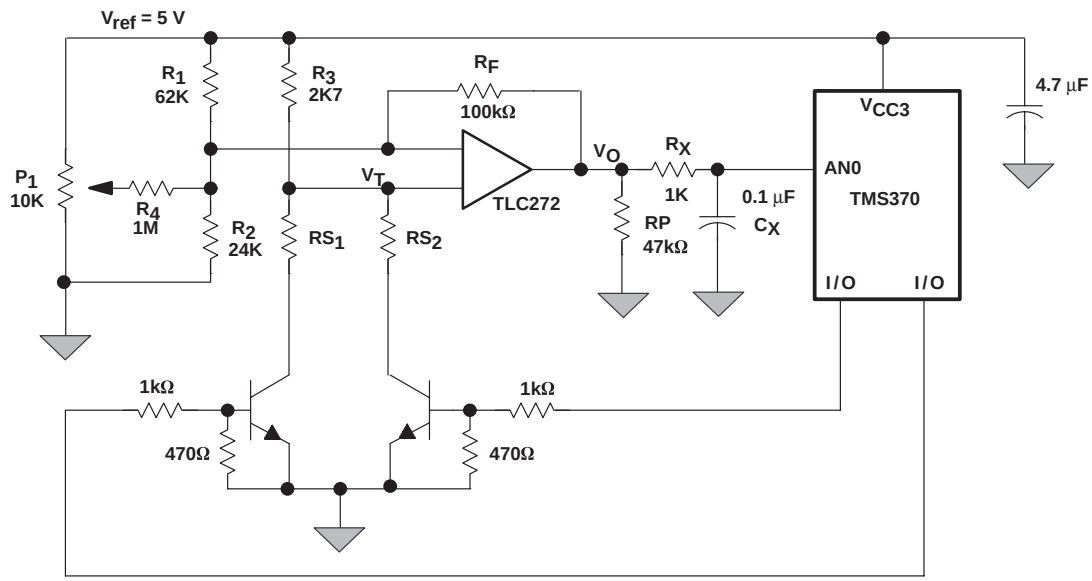

The bridge is comprised of resistors R_1, R_2, R_3, and a temperature sensor (either RS_1 or RS_2). The differential output voltage of the bridge is forced to zero by the feedback connection. The circuit is configured as a current amplifier.

Potentiometer P_1 and resistor R_4 are used to adjust any offset present in the components.

Assuming the transistor turn-on resistance is negligible compared to R_S, then

$$V_T = V_{ref}\,[R_S \div (R_3 + R_S)]$$

The circuit can be analyzed using the virtual ground technique.

PETITIONER ECOBEE
EX. 1010

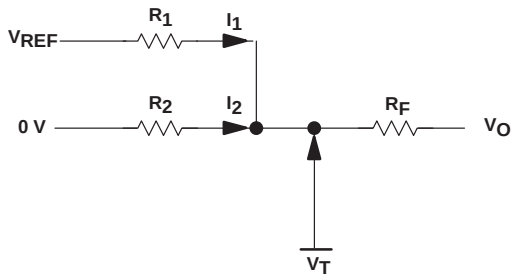

$I_1 = [V_{ref} - V_T] \div R_1$

$I_2 = -V_T \div R_2$

$I_1 + I_2 = -[V_0 - V_T] \div R_F$

Therefore,

$V_O = V_T - R_F(I_1 + I_2)$

$V_O = V_T + R_F[(V_T \div R_2) - (V_{REF} - V_T) \div R_1]$

R_S is a positive temperature coefficient silicon sensor approximately 0.8 % per °C at 25°C. Its nominal resistance at 25°C is 1 kΩ. Resistor R_3 is chosen to linearize the exponential temperature coefficient of R_S.

The temperature sensor interface is required to convert the temperature from 0–100 °C (R_S = 850 Ω to 1700 Ω) to an output ranging from 0 to 5 V. A reasonable value of R_F (100 kΩ) is chosen. R_1 and R_2 are then determined by substituting the conditions of temperature at 0 and 100 degrees C to equation (1) and equation (2).

R_p is a non-critical pull-down resistor. It is used at the output of the op-amp for best amplifier linearity near 0 V. R_X and C_X form a low-pass filter for inexpensive noise filtering.

Automatic Ranging Interface

The following case is an example of autoranging interface circuitry. The circuit has a total of four gain ranges which can be easily extended to more if desired. The gain ranges are 1, 2, 4, and 8. A/D resolution is effectively improved at lower voltage ranges.

The ranging is done by changing the amplification (resistance at the noninverting terminal) of the noninverting amplifier (TLC272). The actual gain of the amplifier is greatly dependent on the accuracy of the resistors. Usually, additional variable resistors are used to adjust the gain of the amplifier. However, if the exact gain of the amplifier at each range is calibrated and stored in the data EEPROM, these manual adjustments can be avoided. The conversion result is then based on the calibration gain to calculate its actual value. For applications requiring high accuracy, the application program can calibrate the gain value at multiple locations in each range.

Two voltage comparators (LM339) are used to provide the lower and higher trip points for ranging. Two analog input pins (AN6, AN7) are configured as general purpose input pins to determine whether the input signal is within the trip points. It is important to leave some margin between the lower (higher) trip points and the minimum (maximum) of the output of the amplifier, such that the amplifier output will not clip at its minimum (maximum) value during the A/D sampling phase. For cost sensitive applications, the user may use the ADC1 itself instead of the voltage comparators to determine the input signal range. However, three additional conversions (98.4 µs at 5 MHz SYSCLK) may be required in the worst case.

PETITIONER ECOBEE
EX. 1010

Two output pins (INT2, INT3) are used to select the desired gain factor of the amplifier.

Table 3. Amplifier Gain Factor

INT2	INT3	GAIN FACTOR
0	0	1
0	1	2
1	0	4
1	1	8

Figure 20. Autoranging Circuit Diagram

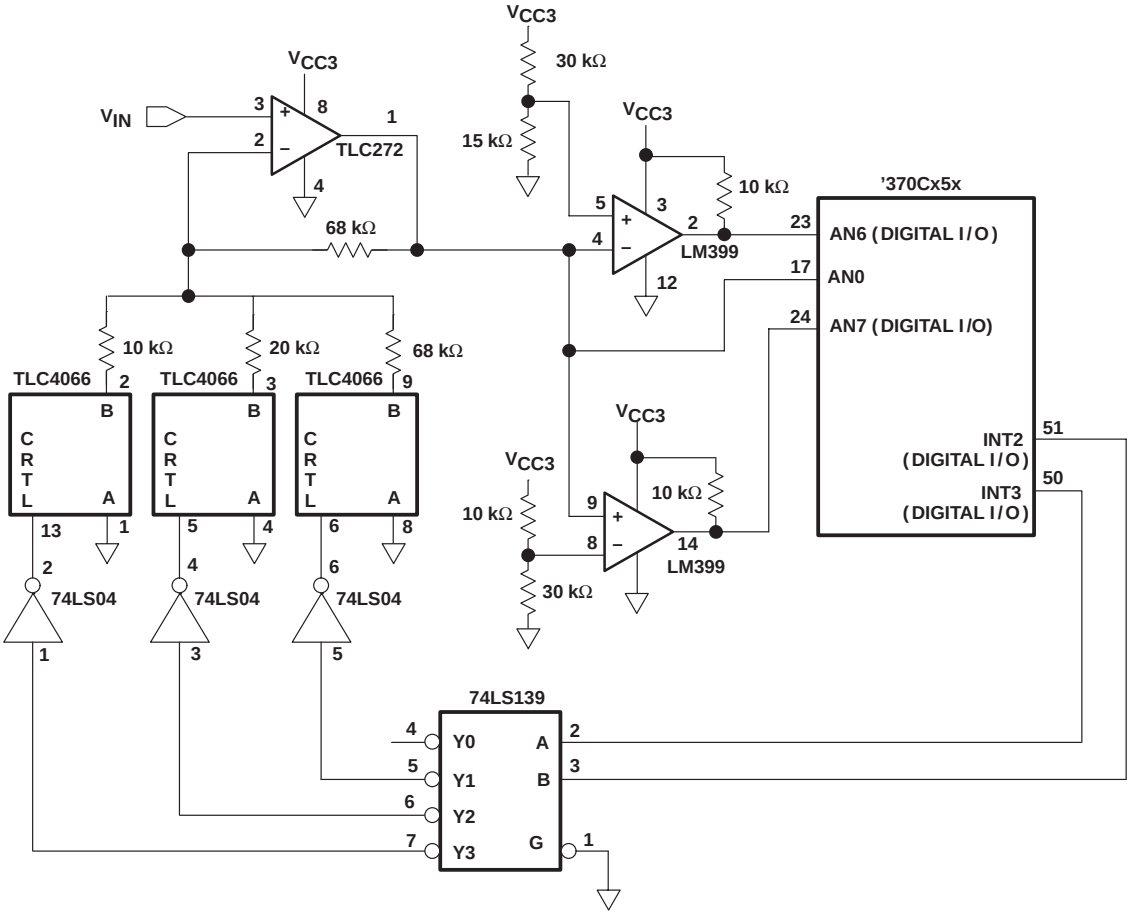

PETITIONER ECOBEE
EX. 1010

Autoranging Interface Routine

```
;
;         ANALOG INPUT CHANNEL          REF CHANNEL
;         ANC                           VCC3
;
;         AN6    GENERAL PURPOSE INPUT PIN (DETERMINE GAIN RANGE)
;         AN7    GENERAL PURPOSE INPUT PIN (DETERMINE GAIN RANGE)
;         INT2   GENERAL PURPOSE OUTPUT PIN (SELECT GAIN RANGE)
;         INT3   GENERAL PURPOSE OUTPUT PIN (SELECT GAIN RANGE)
;
INT2      .EQU      P018                ;INT2 PIN CONTROL REGISTER
G1        .DBIT     3,INT2              ;GAIN FACTOR CONTROL BIT 1
INT3      .EQU      P019                ;INT3 PIN CONTROL REGISTER
G0        .DBIT     3,INT3              ;GAIN FACTOR CONTROL BIT 0
;
;
;
;
          .REG      RESERVE,10
;
;         RESULT-1 : INDICATE THE INPUT SIGNAL RANGE (GAIN FACTOR)
;         RESULT : CONVERSION RESULT
;
          .REGPAIR  RESULT              ;16-BIT REGISTER FOR CONVERSION
                                        ;RESULT
          .REGPAIR  GAIN                ;TEMP REG
          .TEXT     7000H
;
;
;
INIT      MOV       #0FEH,ADENA         ;ENABLE ANO AS ANALOG CHANNELS
                                        ;AN1 — AN7 AS GENERAL PURPOSE
                                        ;INPUT PINS
          MOV       #10H,INT3           ;SET INT3 PIN AS GENERAL PURPOSE
                                        ;OUTPUT PIN
          MOV       #10H,INT2           ;SET INT2 PIN AS GENERAL PURPOSE
                                        ;OUTPUT PIN
;
```


PETITIONER ECOBEE
EX. 1010

```
          MOV       #20H,A              ;OPTIONAL — NOT NECESSARY IF
                                        ;ENOUGH TIME BETWEEN THE LAST INSTR
                                        ;AND THE FIRST SAMPLE
INIT0     DJNZ      A,INIT0             ;WAIT UNTIL OP-AMP IS STABLE
;
;
          MOV       #0A0H,B
          LDSP                          ;INITIALIZE STACK POINTER
          MOVW      #0,RESULT           ;INITIALIZE THE REGISTER
                                        ;INITIAL GAIN FACTOR EQUAL TO 1
          EINT                          ;ENABLE INTERRUPT
;
;
;
;         MAIN PROGRAM
;
;
;
AGAIN2    CALL      SAMPLE              ;SAMPLE ANOTHER SET OF DATA
WAIT2     BTJZ      #04H,ADSTAT,WAIT2   ;CHECK THE "AD READY" BIT
;
;
```

The following section is the subroutine to initiate the A/D conversion. The subroutine first reads the output of the comparators (via AN6 and AN7) to determine the input voltage range. If the input signal is within the desired range, then an A/D conversion will be initiated. Otherwise, the subroutine will adjust the gain factor and repeat the process one more time.

```
;
;      SUBROUTINE SECTION
;
SAMPLE    PUSH      A
UPPER     MOV       ADIN,A
          BTJO      #80H,A,LOWER        ;DOES THE INPUT SIGNAL EXCEED THE
                                        ;UPPER LIMIT
          CMP       #0,RESULT-1         ;IS THE GAIN FACTOR ALREADY SET TO
                                        ;MIN GAIN
          JEQ       CONVRT
          DEC       RESULT-1            ;SET TO LOWER GAIN FACTOR
          SBIT0     G0
          BTJZ      #1,RESULT-1,WAIT
```


PETITIONER ECOBEE
EX. 1010

```
          SBIT0     G1
          SBIT1     G0
          JMP       WAIT
LOWER     BTJO      #40H,A,CONVRT       ;IS THE INPUT SIGNAL BELOW THE
                                        ;LOWER LIMIT
          CMP       #3,RESULT-1         ;IS THE GAIN FACTOR ALREADY SET TO
                                        ;MAX GAIN
          JEQ       CONVRT
          INC       RESULT-1            ;SET TO HIGHER GAIN FACTOR
          SBIT1     G0
          BTJO      #1,RESULT-1,WAIT
          SBIT0     G0
          SBIT1     G1
WAIT      MOV       #10,A               ;SET COUNT
LOOP      DJNZ      A,LOOP              ;WAIT FOR 20 us UNTIL THE OP-AMP
                                        ;IS STABLE
          JMP       UPPER
CONVRT    MOV       #01H,ADSTAT         ;ENABLE THE INTERRUPT AND CLEAR
                                        ;ANY FLAGS
          MOV       #040H,ADCTL         ;START SAMPLING (APPROX. 2µS DELAY
                                        ;FOR CLOCKIN = 20 MHZ)
          MOV       #0C0H,ADCTL         ;START CONVERSION
          POP       A
          RTS
```

The following section is the ADC1 interrupt routine. It saves the conversion result in the register RESULT.

```
;
;      INTERRUPT ROUTINE FOR ADC1
ATOD      MOV       #01,ADSTAT          ;CLEAR THE INTERRUPT FLAG
          MOV       ADDATA,RESULT       ;SAVE THE CONVERSION RESULTS
          RTI                           ;
;
;      INIT INTERRUPT VECTORS
          .SECT     “vect”,7FECH
          .WORD     ATOD,0,0,0,0,0,0,0,0,INIT
                                        ;
                                        ;
```


PETITIONER ECOBEE
EX. 1010

Interfacing a Serial A/D Converter with TMS370 Family Microcontrollers

The following demonstrates the interface between a 10-bit serial A/D converter (TLC1 540/1) and TMS370. This will be useful for those who want to use the TMS370 devices that do not possess on–chip ADC functions but still need A/D conversion, or those systems that require high accuracy (down to 5 mV resolution) and better isolation of the analog system from the relatively noisy digital controller.

The TLC1540 and TLC1541 are both 10-bit, 11 channel serial A/D converters with sample-and-hold circuitry. TLC1540 has ±0.5 LSB error, whereas TLC1541 has ±1 LSB error. The serial A/D converter has four control inputs: chip select (CS), address input, I/O clock, and system clock. The first example uses the on-chip serial peripheral interface (SPI) to interface with the serial A/D, whereas the second example uses software routines to interface with the serial A/D.

Using On-Chip SPI

Figure 21 shows the circuit diagram of the interface between TLC1540/1 and TMS370. This section describes the interface of a 10-bit serial A/D converter through the SPI. The system clock of the TLC1540/1 is provided by the CLKOUT pin of the TMS370. Note that the maximum TLC1540/1 system clock frequency is only 2.1 MHz; an additional frequency divider/counter may required if the SYSCLK frequency is higher than 2.1 MHz.

The serial A/D receives the I/O clock 500 ns after (delay by the dual D flip-flops as shift register) the SPICLK is active; this ensures enough set up time for the channel address. The conversion cycle takes 44 TLC1540/1 system clock cycles and is initiated on the tenth falling edge of the I/O clock.

The following example program converts data from all 11 channels consecutively. It assumes a TMS370 using an 8.4 MHz crystal; for example, 2.1 MHz for CLKOUT. If the application program requires different system clock rates or I/O transmission clock rates, you must ensure that the time between executing the instruction at label TRAN8 for initiating the conversion and TRAN2 for transmitting the next channel address is greater than the time transmitting 8-bit data plus 44 TLC1540/1 system clock cycles.

PETITIONER ECOBEE
EX. 1010

Figure 21. Interfacing Circuit Using SPI

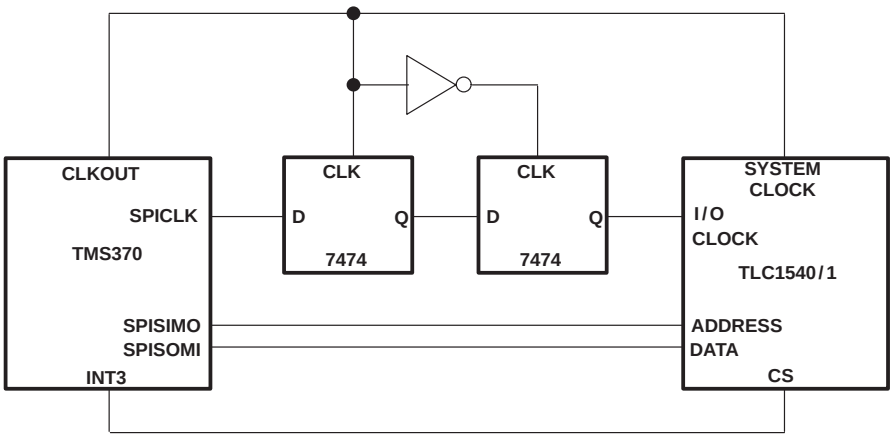

This example program converts data from all 11 channels and stores the digital results in a table beginning at ATABLE. The table contains 11, 16-bit registers. The least significant byte is located at the lower address. The routine stops interrupting the main program after it finishes all 11 channels. If the main program wants more recent data, it needs only to execute the code at RESTART, and the SPI routine will again transmit the channel address to the serial A/D (TLC1540/1) and receive data from the A/D. The flag CNVCMPL is set by the SPI routine as a signal to the main program that all 11 channels have been processed. The address label SPIINT must be placed in the interrupt vector table located at 7FF6h and 7FF7h.

Data Conversion Routine

```
;       SPISIMO   SPI FUNCTIONAL PIN, (CONNECT TO TLC1540/1 ADDRESS INPUT)
;       SPISOMI   SPI FUNCTIONAL PIN, (CONNECT TO TLC1540/1 DATA OUTPUT)
;       SPICLK    SPI FUNCTIONAL PIN, (CONNECT TO TLC1540/1 I/O CLOCK)
;       CLKOUT    SYSTEM CLKOUT, (CONNECT TO TLC1540/1 SYSTEM CLOCK)
;       INT3      GENERAL PURPOSE OUTPUT PIN (CONNECT TO TLC1540/1 CHIP
;                 SELECT)
;
SPICCR    .EQU   P030                ;SPI CONFIGURATION CONTROL REG
SPICTL    .EQU   P031                ;SPI CONTROL REGISTER
SPIBUF    .EQU   P037                ;RECEIVE DATA BUFFER REGISTER
SPIDAT    .EQU   P039                ;SERIAL DATA REGISTER
SPIPC1    .EQU   P03D                ;SPI PIN CONTROL 1
SPIPC2    .EQU   P03E                ;SPI PIN CONTROL 2
SPIPRI    .EQU   P03F                ;SPI PRIORITY CONTROL
DPORT2    .EQU   P02C                ;DPORT 2, CLKOUT CONFIGURATION REG
```


PETITIONER ECOBEE
EX. 1010

```
INT3      .EQU   P019                ;INT3 PIN CONTROL REGISTER
          .REG   ATABLE,22           ;16-BIT REGISTERS FOR CONVERSION RESULT
          .REG   FLAGS               ;REG FLAG
TRANSL    .DBIT  0,FLAGS             ;INDICATE MSB OR LSB TRANSMISSION
CNVCMPL   .DBIT  1,FLAGS             ;CONVERSIONS COMPLETE
          .REG   ADCHANL
          .TEXT  7000H
```

The following section sets up the SPI for communication. The SPI is configured as the master processor to control the communication. For more detailed information about the on-chip SPI, refer to the *TMS370 Family User's Guide*.

```
;
;      SET UP SPI CONFIGURATION
;
INIT      MOV    #087H.SPICCR           ;INITIALIZES SPI CIRCUITRY
                                        ;SELECT CLOCK POLARITY INACTIVE LOW
                                        ;SELECT BIT RATE = CLKIN/8
                                        ;SELECT CHARACTER LENGTH = 8
          MOV    #07H,SPICTL            ;CONFIGURE AS MASTER
                                        ;TRANSMISSION ENABLE, TALK = 1
                                        ;INTERRUPT ENABLE
          MOV    #02H,SPIPC1            ;SET SPICLK AS FUNCTION PIN
          MOV    #22H,SPIPC2            ;SET SPISOMI AND SPISIMO AS
                                        ;FUNCTION PIN
          MOV    #20H,SPIPRI            ;SET EMULATOR SUSPEND BIT
;
          MOV    #18H,INT3              ;SET INT3 AS OUTPUT PIN
          MOV    #08H,DPORT2            ;SET CLKOUT AS FUNCTIONAL PIN
;
          MOV    #0A0H,B
          LDSP                          ;INITIALIZE STACK POINTER TO 0A0H
;
          CLR    A
          MOV    #22,B
AGAIN     MOV    A,*ATABLE-1[B]         ;INITIALIZE THE TABLE
          DJNZ   B,AGAIN
          EINT                          ;ENABLE INTERRUPT
```


PETITIONER ECOBEE
EX. 1010

```
LOOP      CALL   RESTART                ;START CONVERSIONS
;
;
;
;
;      CHECK CNVCMPL BIT IF ALL 11 CONVERSIONS DONE
;
WAIT      BTJZ   #02H,FLAGS,WAIT
;
;      ALL CONVERSIONS DONE, DATA ARE READ
;
;
;         MAIN PROGRAM GOES HERE
;
;
;      NEED MORE RECENT DATA
          CALL   RESTART                ;START TAKING MORE DATA
;
;         MORE MAIN PROGRAM
```

The following section is the subroutine to initiate the transmission. When the transmission is completed, an interrupt request will be generated. Subsequent transmissions will be driven by the interrupt routine.

```
;
;      SUBROUTINE SECTION
RESTART   CLR    ADCHANL                ;INITIALIZE CHANNEL ADDRESS
          CLR    FLAGS                  ;CLEAR ALL FLAGS
          MOV    #01H,SPICCR            ;SET CHARACTER LENGTH TO 2
          MOV    #10H,INT3              ;ACTIVATE TLC1540/1 CHIP SELECT
          MOV    #00H,SPIDAT            ;TRANSMIT THE CHANNEL ADDR
          RTS
```

The following section is the SPI interrupt routine. It saves the previous conversion result in ATABLE and initiates transmissions until all 11 channels have been processed.

```
;
;      INTERRUPT ROUTINE FOR SPI
```


PETITIONER ECOBEE
EX. 1010

```
SPIINT    PUSH   A                   ;SAVE REGISTERS
          PUSH   B
          MOV    SPIBUF,A            ;GET THE CONVERSION RESULT AND CLEAR
                                     ;INTERRUPT FLAG
          MOV    ADCHANL,B           ;GET CHANNEL NUMBER
          JZ     NOST0               ;DO NOT DECREMENT IF THIS IS CHANNEL 0
          DEC    B                   ;GET CHANNEL NUMBER FOR RECEIVING DATA
          RL     B                   ;MULTIPLY BY 2
NOST0     BTJO   #01H,FLAGS,CMPLT    ;CHECK IF ALL 10 BITS DATA RECEIVED
;
;      SAVE THE MSB 2 BITS' RESULT AND
;      INITIATE THE TRANSMISSION OF THE LAST 8 BITS' RESULT
;
          MOV    #07H,SPICCR         ;SET THE CHARACTER LENGTH TO 8
;
; THE MOST SIGNIFICANT 2 BITS ARE LEFT OVER FROM FROM PREVIOUS TRANSMISSION
; THEY ARE THE LEAST 2 SIGNIFICANT BITS OF THE CHANNEL ADDRESS
;
TRAN8     MOV    A,SPIDAT            ;INITIATE TRANSMISSION
          AND    #03H,A              ;GET THE LAST 2 BITS ONLY
          MOV    A,*ATABLE+1[B]      ;STORE THE MOST SIGNIFICANT 2 BITS
NOST      INC    FLAGS               ;SET THE FLAG INDICATE THE
                                     ;LSB RESULT ALREADY RECEIVED
          JMP    EXITSP
CMPLT     MOV    A,*ATABLE[B]        ;STORE THE LEAST SIGNIFICANT 8 BITS
NOST1     CMP    #0BH,ADCHANL        ;CHECK IF ALL CONVERSIONS DONE
          JNZ    GOCONVT
          MOV    #18H,INT3           ;DESELECT TLC1540/1 CHIP SELECT
          SBIT1  CNVCMPL             ;INDICATE ALL CONVERSIONS COMPLETED
          JMP    EXITSP
;
;      INITIATE MORE CONVERSION
GOCONVT
          INC    ADCHANL             ;POINT TO NEXT CHANNEL
          MOV    ADCHANL,B
          SWAP   B                   ;LEFT JUSTIFY THE CHANNEL ADDR
          MOV    #01H,SPICCR         ;SET CHARACTER LENGTH TO 2
```


PETITIONER ECOBEE
EX. 1010

```
TRAN2     MOV    B,SPIDAT            ;INITIATE ANOTHER TRANSMISSION
          CLR    FLAGS               ;CLEAR THE FLAG, INDICATE THE
                                     ;CHANNEL ADDRESS ALREADY TRANSMITTED,
EXITSP    POP    B                   ;RESTORE THE REGISTERS.
          POP    A
EXIT      RTI
;
;
;         INIT INTERRUPT VECTORS
          .SECT  “vect”,7FECH
          .WORD  0,0,0,0,0,SPIINT,0,0,0,INIT
;
;
```


PETITIONER ECOBEE
EX. 1010

Using Software to Interface With a Serial A/D Converter

This section demonstrates the interface of TLC1540 through software routines. This will be useful for cost sensitive applications that need to minimize external hardware.

Four general purpose I/O pins are used to interface with the TLC1540. The following software example performs the same function as explained in the “Using On-Chip SPI” Section of this report, without any additional hardware. It converts data from all 11 channels and stores the digital results into a table beginning at ATABLE. The table contains 11, 16-bit registers. The least significant byte is located at the lowest address. The routine stops interrupting the main program after it finishes all 11 channels. If the main program wants more recent data, it needs only to execute the code at CONVRT. Figure 22 shows the interconnection between TMS370 and TLC1540.

Figure 22. Interfacing Circuit Using Software Routines

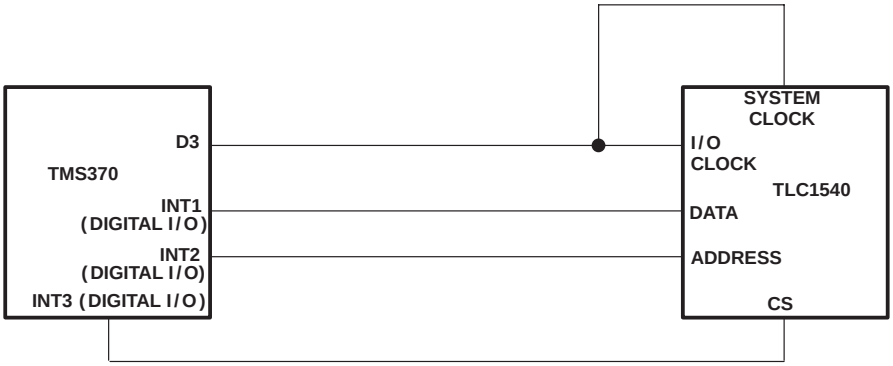

PETITIONER ECOBEE
EX. 1010

```
;
;
;      D3/CLKOUT GENERAL PURPOSE OUTPUT PIN, (CONNECT TO TLC1540/1
;                I/O CLOCK AND TLC1540/1 SYSTEM CLOCK)
;      INT1      GENERAL PURPOSE INPUT PIN (CONNECT TO TLC1540/1
;                DATA OUTPUT)
;      INT2      GENERAL PURPOSE OUTPUT PIN (CONNECT TO TLC1540/1
;                ADDRESS INPUT)
;      INT3      GENERAL PURPOSE OUTPUT PIN (CONNECT TO TLC1540/1
;                CHIP SELECT)
DPORT1    .EQU      P02C            ;DPORT 1, CLKOUT CONFIGURATION REG
DPORT2    .EQU      P02D            ;DPORT 2, CLKOUT CONFIGURATION REG
DDATA     .EQU      P02E            ;DPORT DATA REG
DDIR      .EQU      P02F            ;DPORT DATA DIR REG
INT1      .EQU      P017            ;INT1 PIN CONTROL REGISTER
INT2      .EQU      P018            ;INT2 PIN CONTROL REGISTER
INT3      .EQU      P019            ;INT3 PIN CONTROL REGISTER
          .REG      RESERVE,10
          .REG      ATABLE,22       ;16-BIT REGISTERS FOR CONVERSION RESULT
          .REGPAIR  RESULT,2        ;TEMPORARY RESULT REGISTER
          .REG      FLAG            ;REG FLAG
          .REG      ADCHANL
          .REG      BITCNT
          .REG      CHNLCNT
IOCLK     .DBIT     3,DDATA         ;TLC1540 SYSTEM CLOCK
                                    ;AND I/O CLOCK FOR TRANSMISSION
CS        .DBIT     3,INT3          ;TLC1540 CHIP SELECT
ADADDR    .DBIT     3,INT2          ;TLC1540 ADDRESS INPUT
DATAOUT   .DBIT     6,INT1          ;TLC1540 DATA OUTPUT
;
;
          .TEXT     7000H
;
;
```


PETITIONER ECOBEE
EX. 1010

```
BEGIN     MOV    #18H,INT3          ;SET INT3 AS OUTPUT PIN
          MOV    #18H,INT2          ;SET INT2 AS OUTPUT PIN
          MOV    #00H,DPORT1        ;SET CLKOUT AS GENERAL PURPOSE I/O
          MOV    #00H,DPORT2
          MOV    #08H,DDIR
;
          MOV    #0A0H,B
          LDSP                      ;INITIALIZE STACK POINTER TO 0A0H
;
          CLR    A
          MOV    #22,B
AGAIN     MOV    A,*ATABLE-1[B]     ;INITIALIZE THE TABLE
          DJNZ   B,AGAIN
          EINT                      ;ENABLE INTERRUPT
LOOP      CALL   CONVRT             ;START CONVERSIONS
;
;
;
;
;
;         MAIN PROGRAM GOES HERE
;
;
;
;
;      NEED MORE RECENT DATA
          NOP
          CALL   CONVRT             ;START TAKING MORE DATA
          NOP
;
;         MORE MAIN PROGRAM
;
```


PETITIONER ECOBEE
EX. 1010

The following section is the subroutine CONVRT that initiates the A/D conversion. It sets up the channel address and invokes subroutine ADTRAN for serial transmission. When the transmission finishes, it saves the previous conversion result in ATABLE and generates 44 I/O clocks for current A/D conversion.

```
;
;       SUBROUTINE SECTION
;
;
;       SUBROUNTINE CONVRT
;
;       ENTER : NO PARAMETERS
;       EXIT  : ATABLE - FILL 22 ENTRIES STARTING FROM ATABLE
CONVRT    PUSH   A
          PUSH   B
          CLR    ADCHANL             ;INITIALIZE CHANNEL ADDRESS
                                     ;THE UPPER 4 BITS INDICATE THE CHANNEL
                                     ;ADDRESS
          CLR    FLAG                ;CLEAR ALL FLAGS
          MOV    #12,CHNLCNT         ;SET COUNT TO NUMBER OF CHANNELS + 1
                                     ;ONE MORE TRANSMISSION TO READ BACK
                                     ;THE CONVERSION RESULT
NEXT      MOV    ADCHANL,B           ;
          SWAP   B                   ;PASS THE CHANNEL ADDRESS TO
                                     ;SUBROUTINE THROUGH REGISTER B,
                                     ;THE UPPER 4 BITS IS THE CHANNEL ADDRESS
          CLR    RESULT              ;CLEAR THE TEMPORARY REGISTER
          CLR    RESULT-1
          CALL   ADTRAN              ;TRANSMIT ADDRESS AND RECEIVE DATA
          MOV    ADCHANL,B           ;IS THE CHANNEL ADDRESS 0?
          JZ     SKSAVE              ;SKIP THE FIRST ONE
          RLC    B                   ;MULTIPLY BY TWO
          MOV    RESULT-1,A          ;SAVE THE RESULT
          MOV    A,*ATABLE-2[B]
          MOV    RESULT,A
          MOV    A,*ATABLE-1[B]
SKSAVE    INC    ADCHANL             ;NEXT CHANNEL
;
          MOV    #44,B
```


PETITIONER ECOBEE
EX. 1010

```
REPEAT    SBIT1  IOCLK                  ;44 SYSTEM CLOCKS FOR CONVERSION
          SBIT0  IOCLK
          DJNZ   B,REPEAT
;
          DJNZ   CHNLCNT,NEXT
          POP    B
          POP    A
          RTS
```

The following section is subroutine ADTRAN that handles the communication between TMS370 and TLC1540/1.

```
;
;      SUBROUTINE ADTRAN
;
;      BIT BANGING ROUTINE
;      TRANSMITTING AND RECEIVING DATA TO/FROM TLC1540
;
;      ENTER : B - AD CHANNEL ADDRESS (UPPER 4 BITS)
;      EXIT : RESULT - 10-BIT RESULT
;
ADTRAN    SBIT0  CS                     ;CHIP SELECT ACTIVE
          SBIT1  IOCLK                  ;SEND TWO CLOCK PULSES TO TLC1540
          SBIT0  IOCLK
          SBIT1  IOCLK
          SBIT0  IOCLK
          MOV    #8,BITCNT              ;SET UP COUNTER
ADRTRA    SBIT1  ADADDR                 ;TRANSMIT THE ADDRESS
          RL     B
          JC     BIT1                   ;IS ADDRESS EQUAL TO 1
          SBIT0  ADADDR                 ;NO, SET IT BACK TO 0
BIT1      SBIT1  IOCLK
          RLC    RESULT                 ;GET THE CONVERTED RESULT
          RLC    RESULT-1               ;THE BIT IS EQUAL TO 1
          JBIT0  DATAOUT,BIT0           ;IS THE DATA BIT EQUAL TO 0
          OR     #1,RESULT              ;NO, SET IT BACK TO 1
```


PETITIONER ECOBEE
EX. 1010

```
BIT0      SBIT0  IOCLK
          DJNZ   BITCNT,ADRTRA
;
;
          INV    FLAG                    ;UPDATE THE FLAG
          BTJZ   #1,FLAG,DONE
          MOV    #2,BITCNT               ;SET COUNTER FOR THE LAST 2 BITS
          SBIT1  CS                      ;CS GO INACTIVE AFTER THE EIGHTH
                                         ;I/O CLOCK, CS MUST BE DEACTIVATED
                                         ;TWO I/O CLOCK BEFORE THE END OF
                                         ;TRANSMISSION
          JMP    BIT1
DONE      RTS
;
;
;      INIT INTERRUPT VECTORS
          .SECT  "vect",7FFEH
          .WORD  BEGIN
```

The above examples demonstrate the basic principle of interfacing a serial A/D with the TMS370 family microcontrollers. For applications that use TMS370x10, but only need one channel A/D, you may consider TLC548/9, which is a single-channel 8-bit A/D converter.

PETITIONER ECOBEE
EX. 1010

Conclusions

This application report provides information on using the ADC1 converter module with the TMS370 family microcontrollers to a provide cost-effective system solution. Examples have been given to demonstrate the operation of the ADC1, typical methods of interfacing to the external circuits, and interactions with other modules. The TMS370 on-chip timer provides a handy method to control the sampling frequency of conversions. Calibration data of analog components can be stored in the data EEPROM module. This data can be used to adjust the conversion result to achieve high system accuracy while using inexpensive analog components.

PETITIONER ECOBEE
EX. 1010

Appendix A: ADC1 Control Registers

The ADC1 is controlled and accessed through registers in the peripheral file. These registers are listed in Figure 23 and described in the *TMS370 Family User's Guide*. The bits shown in shaded boxes in Figure 23 are privilege mode bits: they can only be written to in the privilege mode.

Figure 23. ADC1 Control Register Memory Map

ADDR	PF	BIT 7	BIT 6	BIT 5	BIT 4	BIT 3	BIT 2	BIT 1	BIT 0	
1070h	070	CONVERT START	SAMPLE START	REF VOLT SELECT 2	REF VOLT SELECT 1	REF VOLT SELECT 0	AD INPUT SELECT 2	AD INPUT SELECT 1	AD INPUT SELECT 0	ADCTL
1071h	071	—	—	—	—	—	AD READY	AD INT FLAG	AD INT ENA	ADSTAT
1072h	072	A - TO - D CONVERSION DATA REGISTER								ADDATA
1073h to 107Ch	073 to 07C	RESERVED								
107Dh	07D	PORT E DATA INPUT REGISTER								ADIN
107Eh	07E	PORT E INPUT ENABLE REGISTER								ADENA
107Fh	07F	AD STEST	AD PRIORITY	AD ESPEN	—	—	—	—	—	ADPRI

PETITIONER ECOBEE
EX. 1010

Appendix B

ADC1 Errors

Figure 24 shows the transfer characteristics of the A/D conversion and the related errors.

Figure 24. A/D Transfer Characteristics

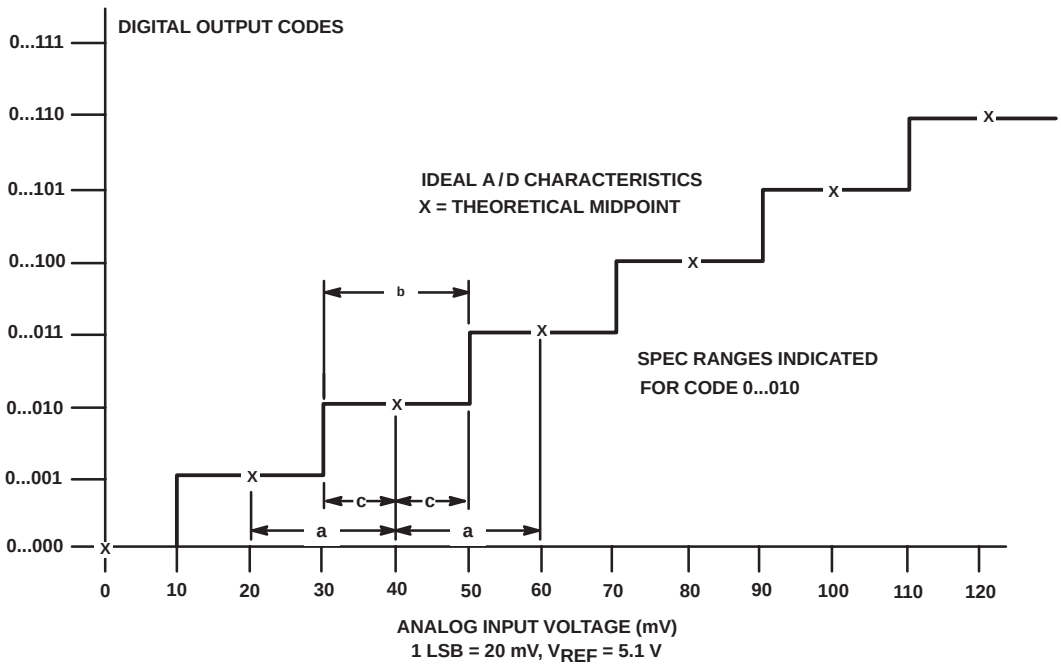

absolute accuracy: An indication of the discrepancy between the A/D converted value of a given input and the theoretical value. It is measured by the difference (positive or negative) between the theoretical midpoint of a given digital output code and any analog input that will produce that code. Absolute error comprises offset error, gain error, linearity error, and is generally expressed in terms of LSB. The absolute error, denoted by “a”, is ± 1 LSB.

differential linearity error: The difference between the actual step width and the ideal value. If the differential linearity error is greater than 1 LSB, this can lead to missing codes in the A/D conversion (nonmonotonicity). The absolute error, denoted by “b”, is ± 1/2 LSB.

gain error: The difference between the actual midstep value and the nominal midstep value in the transfer curve at the specified gain point after the offset error has been adjusted to zero. It refers to absolute accuracy.

offset error: The difference between the actual midstep value and the nominal midstep value at the offset point. It refers to absolute accuracy.

quantization error: Quantization error is an inherent error in any A/D converter. It is the maximum possible deviation of the actual analog input value from the nominal midstep value. The quantization error, denoted by “c”, is ± 1/2 LSB.

PETITIONER ECOBEE
EX. 1010

Appendix C

External A/D Converters

The following section provides some hints for using external components to perform A/D conversion. This will be useful for low end applications using TMS370 without A/D but still needing A/D conversion, or those applications that need more resolution than the on-chip A/D can provide.

For applications requiring high accuracy but slow conversion rate (in ms), one can use a dual slope A/D converter like TL505C. The on-chip timer can be used to generate precise timing control signals and measure the output timing (input capture function) to determine the input voltage.

Figure 25. Functional Block Diagram of TL505C Interface With TMS370

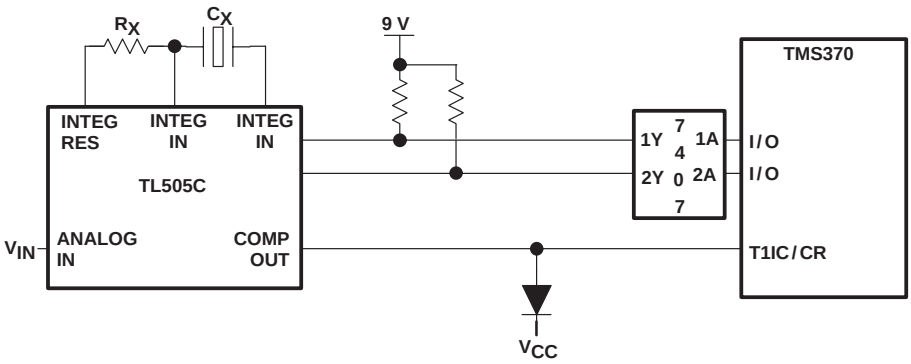

PETITIONER ECOBEE
EX. 1010

Figure 26. Conversion Timing Diagram

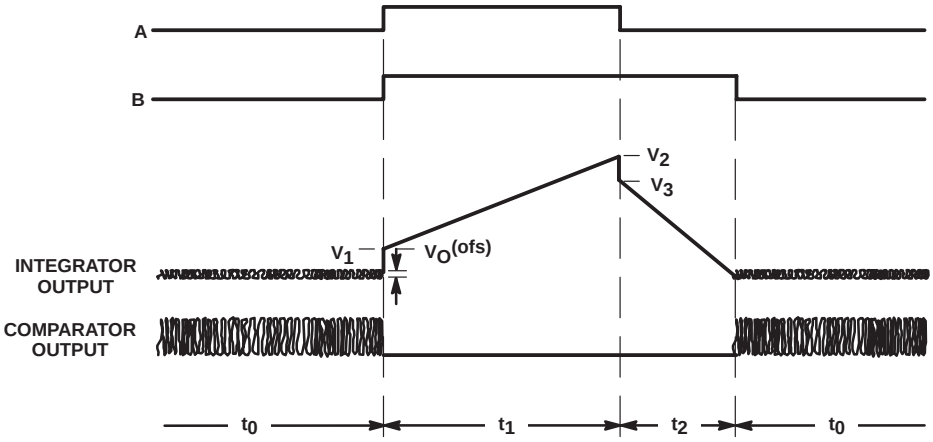

$$V_1 = V_2 - V_3 = V_I + V_{O\,(ofs)}$$

CONTROL		ANALOG
A	B	SWITCHES CLOSED
L	L	S1, S2
H	H	S3
L	H	S1, S4

$$H = V_{IH}\ ,\ L = V_{IL}$$

$$V_{IN} = -\,V_{REF}\frac{t2}{t1}$$

PETITIONER ECOBEE
EX. 1010

Instead of using commercial A/D converters, you can also build your own A/D. One of the simplest implementations is to use a 10-bit D/A converter with a voltage comparator to determine the input voltage. The TMS370 performs a binary search to determine the digital value of the input voltage (10 conversions for 10-bit D/A converter).

Figure 27. Functional Block Diagram Using D/A Converter as A/D

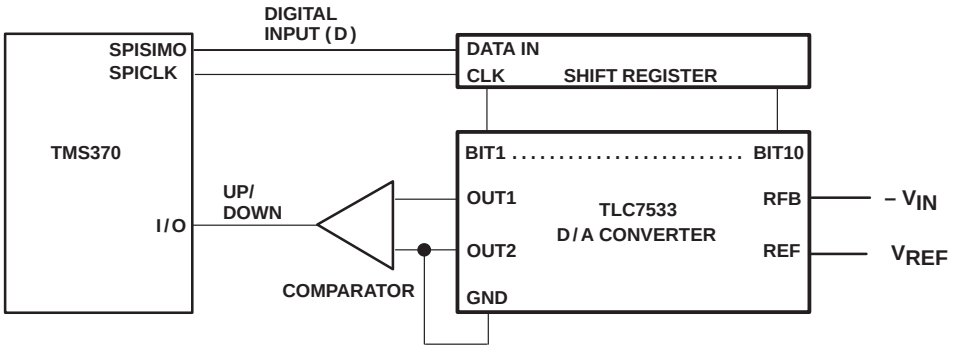

$$\text{THRESHOLD} = -V_{REF}\,\frac{D}{1024}$$

PETITIONER ECOBEE
EX. 1010

Another way to implement an A/D is by using a voltage/frequency (V/F) converter. The frequency output can be measured by the on-chip timer using the input capture function. The V/F converter can generate frequency outputs up to 500 kHz. The on-chip timer can provide precise timing measurements for the frequency output signal. For a clock frequency of 5 MHz, the timer clock period is 200 ns, the accuracy of the A/D conversion will mainly depend on the V/F converter.

Figure 28. Functional Block Diagram Using V/F Converter as A/D

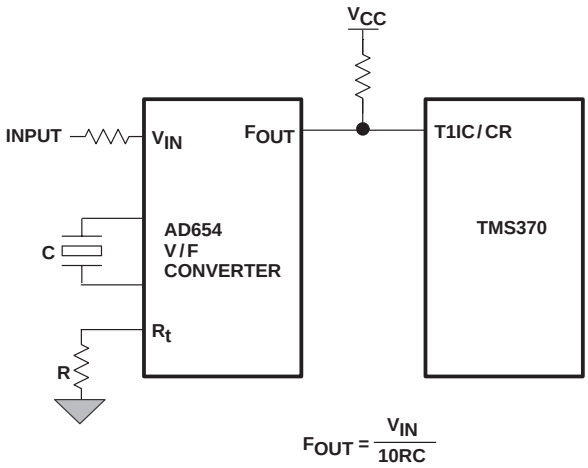

PETITIONER ECOBEE
EX. 1010

Appendix D: A / D Testing

The following section provides information about testing two A / D converter parameters, absolute accuracy and differential linearity error.

Table 4. Test Conditions

SYSCLK	0.5 MHz and 5 MHz
V_{CC3}	5.5 V
V_{ref}	5.1 V
Sampling time	2 µs (SYSCLK = 5 MHz) 20 µs (SYSCLK = 0.5 MHz)

PETITIONER ECOBEE
EX. 1010

Figure 29. Block Diagram of Test Set-Up

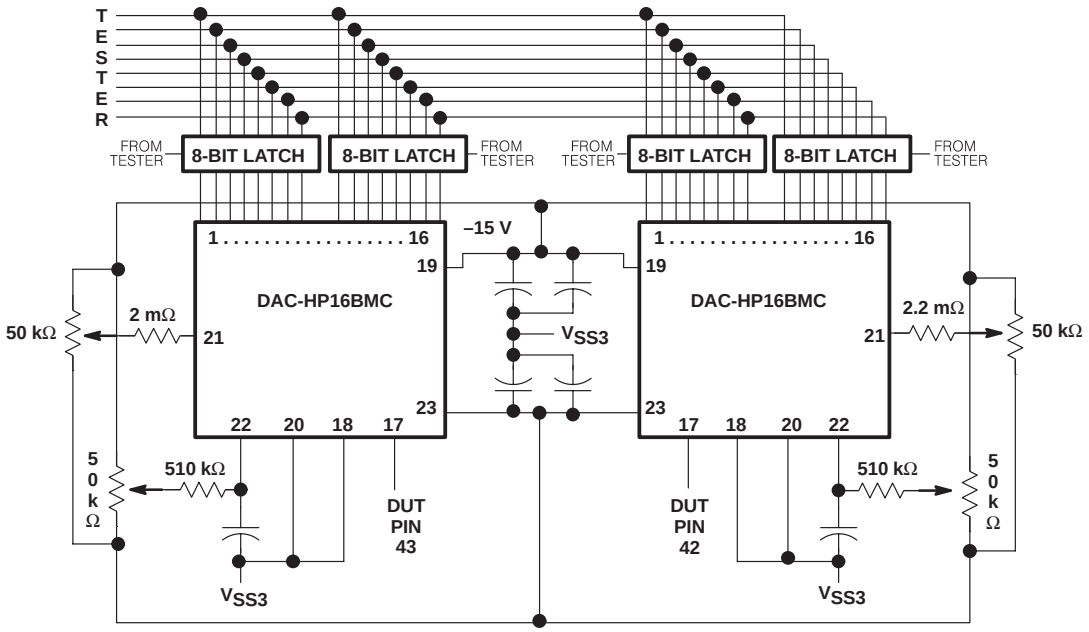

Note: Pin 24 of DAC is left open; latches are connected to digital +5 V and GND.

Two 16-bit D/A converters are used to provide accurate reference voltage and an analog input signal.

At the theoretical midpoint of each code, 256 conversions are performed. If all 256 digital codes are generated by these conversions, this guarantees that the A/D conversions are within one LSB absolute accuracy.

The differential linearity error is measured by the code width or voltage range, of each individual code. With V_{ref} at 5.1V, 1/2 LSB corresponds to 10 mV. For ± 1/2 LSB differential linearity error, the code width of any individual code will need to be from 10 to 30 mV. Figure 30 illustrates code width measurement:

PETITIONER ECOBEE
EX. 1010

Figure 30. Code Width Measurement

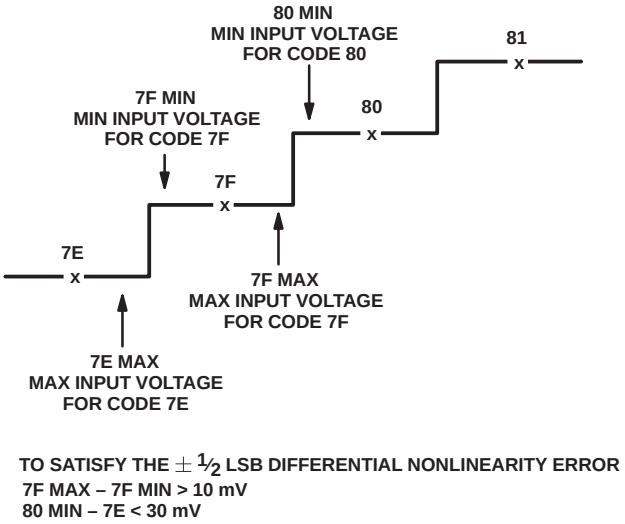

Conversions are performed with input incremented by steps of 2 mV starting from the midpoint of 7E. The analog voltage $7E_{max}$ is the maximum possible value before any conversion that generates 7F.

Another set of conversions is performed with input decremented at a step of 2 mV starting from the midpoint of 80. The analog voltage 80_{min} is the minimum possible value before any conversion that generates 7F.

In order to minimize the test time for the ADC1 modules, only 14 codes are tested for the differential linearity error (see Figure 31). These 14 codes have the largest differential linearity errors. In the Module Description Section (page 313), we explained that conversion is achieved by switching the capacitors one at a time. The transition of these codes corresponds to switching the capacitor array to the next significant, or weighted, capacitance stage. Figure 32 shows a typical A/D differential linearity characterization result.

PETITIONER ECOBEE
EX. 1010

Figure 31. Codes Having Maximum Differential Linearity Error

0000	0000	0000	0011
0000	0001	0000	0100
0000	0111	0000	1111
0000	1000	0001	0000
0001	1111	0000	1111
0010	0000	0100	0000
0111	1111		
1000	0000		

Figure 32. Differential Linearity Error

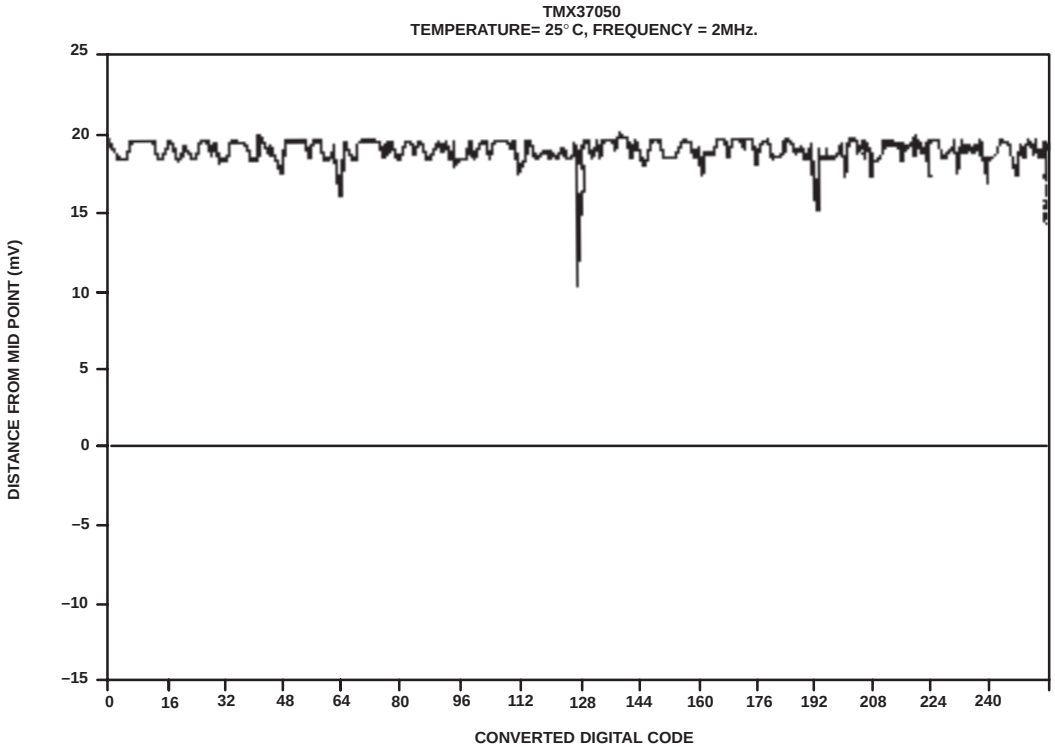

PETITIONER ECOBEE
EX. 1010

Glossary

aliasing signal: The false lower frequency signal reconstructed from an analog input because of insufficient sampling rate (see Nyquist Criterion).

conversion speed: Provides an indication of system sampling rate. It is usually expressed in conversions per second.

code width or step width: The voltage corresponding to the difference between two adjacent code transitions.

input leakage: Leakage current of an analog input pin.

monotonicity: The state of having at least one analog input voltage for every possible digital output code (that is, no missing code) occurring in ascending or descending order.

Nyquist criterion: A criterion that requires using a sampling frequency which is greater than twice that of the highest frequency to be sampled to recover the original signal without distortion.

ratiometric conversion: The output of an A/D conversion which is a digital number proportional to the ratio of the input to a fixed or variable reference. In some applications where the measurement is affected by the slow, varying changes of the reference voltage comparable to the conversion time, it is advantageous to use that same reference as the reference for the conversion to eliminate the effect of variation.

resolution: The ability of the converter to distinguish between adjacent analog input levels. An 8-bit converter is capable of distinguishing between input levels that differ by 1/256 of the full scale range.

sample-and-hold circuit: A circuit that accurately acquires and stores an analog voltage on a capacitor for a certain period of time.

transducer: A device that converts input energy of one form into output energy of another, such as an electrical signal.

PETITIONER ECOBEE
EX. 1010

References

Linear Applications Group, *Linear Circuits Applications, LinCMOS Products: Op-Amps, Comparators and Timers*, Texas Instruments Technical Publishing, Dallas, Texas, 1987.

Linear Applications Handbook, Linear Technology Corporation, Milpitas, California, 1987.

Linear Products, *TLC1540 LinCMOS 10-Bit Analog-to-Digital Converter,* Texas Instruments Technical Publishing, Dallas, Texas, 1986.

McCreary, James L, "All-MOS Charge Redistribution Analog-to-Digital Conversion Technique." *IEEE Journal of Solid-State Circuits*, 1975.

Pippenger, D.E., and Tobaben, E.J. *Linear and Interface Circuits Applications*, Texas Instruments Technical Publishing, Dallas, Texas, 1986.

Sheingold, Daniel H, *Transducer Interface Handbook,* Analog Devices, Inc, Massachusetts, 1981.

The Handbook of Linear IC Applications, Burr-Brown Corporation, Tucson, Arizona, 1987.

T.I. Microcontroller Applications Group, *TMS370 Family User's Guide*, Texas Instruments Technical Publishing, Dallas, Texas, 1996.

T.I. Microcontroller Group, *TMS370 Family Assembly Language Tools User's Guide*, Texas Instruments Technical Publishing, Dallas, Texas, 1996.

T.I. Microcontroller Group, *TMS370Cx5x 8-Bit Microcontrollers*, Texas Instruments Technical Publishing, Dallas, Texas, 1995.

PETITIONER ECOBEE
EX. 1010

PETITIONER ECOBEE
EX. 1010

Analog-to-Digital (A/D) Helpful Hints

Michael S. Stewart
Microcontroller Products — Semiconductor Group
Texas Instruments

PETITIONER ECOBEE
EX. 1010

PETITIONER ECOBEE
EX. 1010

Analog-to-Digital V_{CC} and V_{SS} Pins

The A/D module has been designed with separate power (V_{CC3}) and ground (V_{SS3}) reference pins. This was done to allow a greater level of noise immunity for the A/D conversion requirements. When using the A/D module, the V_{CC3} and V_{SS3} pins must be connected to an appropriate power source and current return path. This must be done when using the XDS development system or an actual device. If these pins are not connected and an A/D conversion is attempted, the results will vary and could include an invalid conversion or A/D completion flag not being set.

Power Down Operation

It is recommended to complete any A/D conversion before entering a power down mode. If you are in the middle of an A/D conversion and then enter a power down mode, the conversion will be completed after the power down mode is exited, but the results of the conversion will be indeterminate. Also, it is not necessary to disconnect the V_{CC3} and V_{SS3} pins when entering a power down mode.

A/D Reference Options

You may use up to one of eight A/D pins as the voltage reference (V_{ref}) for the TMS370 A/D conversion. These eight references include AN1 – AN7, and V_{CC3}. There are three bits (REF VOLT SELECT0–2) in the ADCTL register (P070.5–3) that control the A/D voltage reference selection. The design flexibility of the TMS370 A/D module voltage reference selection allows various voltages or input signals to be used as reference voltages for other analog input signals. See Chapter 11 of the *TMS370 Family User's Guide* for additional information.

A/D Source Impedence

The TMS370 A/D module incorporates a successive approximation design for the conversion circuitry. To guarantee the internal circuitry is allowed to charge sufficiently, the specification tw(s) must be met. This specification requires a minimum delay time from when the SAMPLE START (P070.6) bit is set until prior to setting the CONVERSION START (P070.7) bit. The tw(s) specification requires 1 µS delay per kΩ of source impedance of the analog input channel used in the conversion. This delay is needed to allow the internal circuitry to charge sufficiently during the sample time before the conversion actually starts. Delay times of less than those specified may result in inaccurate conversion results.

For example, if you had a signal connected to the AN0 pin that had a source impedance of 5 kΩ, you would need to delay 5 µs between setting the SAMPLE START bit and setting the CONVERSION START BIT. Assuming an internal system clock (SYSCLK) frequency of 5 MHz, (200 ns period) the tw(s) delay time would be equivalent to 25 SYSCLK cycles. The formula required to determine the number of SYSCLK cycles required for delay is:

$$\text{SYSCLK Cycles} = [\text{Source impedance (k}\Omega) \times 1\ \mu\text{s / k}\Omega] \text{ / SYSCLK period}$$

Substituting for the above example we would get:

$$\text{SYSCLK cycles} = [5\ \text{k}\Omega \times 1\ \mu\text{s / k}\Omega] \text{ /200 ns}$$

$$= 5\ \mu\text{s / 200 ns}$$

$$= 25$$

PETITIONER ECOBEE
EX. 1010

NOTE:

The TMS370 devices require the SAMPLE bit be set before the CONVERSION bit. This requirement means that separate instructions are required to set these two bits. The maximum SYSCLK frequency for the TMS370 family is 5 MHz. The MOV #iop,Pd instruction format requires 10 SYSCLK cycles to complete. At 5 MHz SYSCLK these 10 cycles will take 2 µS to complete. Therefore if the source impedance of the A/D input pin selected for conversion is 2 kΩ or less, then no additional delay.

Example : Typical A/D Input Selection and Conversion Process

The following code example will provide a template for initializing an A/D conversion. The following conversion variables are initialized:

- Input channel used for conversion – AN5
- Voltage reference (V_{ref}) – V_{CC3}
- Source impedance of AN5 = 5 kΩ
- The result of the conversion will be polled (interrupt driven routines are similar)
- SYSCLK = 5 MHz

Code

```
ADCTL      .EQU   P070              ;A/D equates
ADSTAT     .EQU   P071
ADDATA     .EQU   P072
ADIN       .EQU   P07D
ADENA      .EQU   P07E
ADPRI      .EQU   P07F
AD_READY   .DBIT  2,ADSTAT          ;Bit definitions
AD_FLAG    .DBIT  1,ADSTAT
           .REG   BUFFER            ;Define a register
START      MOV    #0DFh,ADENA       ;Make sure AN5 can be selected an analog
                                    ;input. All others may be digital inputs.
           MOV    #000h,ADSTAT      ;Clear the AD INT FLAG and ENA bits.
           MOV    #000h,ADPRI       ;Optional – Select level 1 ints (not used).
READY      JBIT0  AD_READY,READY    ;Wait until the converter is ready before
                                    ;starting the sample process.
           MOV    #10000101b,ADCTL  ;Start sample, select VCC3 as VREF, and AN5
                                    ;as input channel.
;This instruction takes 10 SYSCLK cycles (2 µs). We still need to delay 3 µS
;more.
DELAY      INV A                    ;Dummy write takes 8 SYSCLK cycles (1.6 µs)
           INV A                    ;Dummy write takes 8 SYSCLK cycles (1.6 µs)
           OR     #040h,ADCTL       ;Set CONVERSION START bit and keep
                                    ;SAMPLE BIT and previous init the same.
```


PETITIONER ECOBEE
EX. 1010

```
WAIT      JBIT0  AD_FLAG,WAIT     ;Wait on the AD INT FLAG bit to be set.
          MOV    ADDATA,A         ;Read conversion data, store in BUFFER.
          MOV    A,BUFFER
```


PETITIONER ECOBEE
EX. 1010

PETITIONER ECOBEE
EX. 1010

Part III
Module Specific Application Design Aids

Part III contains six sections:

RESET Operations 99

SPI and SCI Modules 105

Timer and Watchdog Modules 199

Analog to Digital Modules 309

PACT Module 375

I/O Pins 439

PETITIONER ECOBEE
EX. 1010

PETITIONER ECOBEE
EX. 1010

PACT Command Macros

Microcontroller Products—Semiconductor Group
Texas Instruments

PETITIONER ECOBEE
EX. 1010

PETITIONER ECOBEE
EX. 1010

PACT Command Macros

This application note contains macro definitions for all PACT commands and definitions. All the actions desired in each of the commands/definitions must be passed in the macro as they are defined in the following equates. All the actions are passed as one parameter in the macro. These actions are concatenated by '|' to form one parameter. These actions can be defined in any order.

NOTE:

If an action, which is not a valid action for a particular command or definition, is used in that command, incorrect assembly may occur without flagging an error. If the user wants to use different action names, the equate table must be modified.

Macro Definitions

```
;OUTPUT       PINS
op1    .EQU   1
op2    .EQU   2
op3    .EQU   3
op4    .EQU   4
op5    .EQU   5
op6    .EQU   6
op7    .EQU   7
op8    .EQU   8
;
;ACTIONS                        VTD BRD OTD SCC CCC DEC
clr_pin       .EQU   0      ;              x   x     Default condition
clr_evt1      .EQU   0      ;                      x Default condition
nxt_def       .EQU   1      ;              x   x   x Next entry is a def
int_cmp       .EQU   2      ;              x   x     Interrupt on compare
int_evt1      .EQU   2      ;                      x Interrupt on event 1
int_trst      .EQU   4      ;    x         x         Interrupt on timer = 0
enable        .EQU   8      ;    x      x  x      x Enable timer or pin
rst_def_tmr   .EQU   10h    ;           x            Reset def tmr on evt max
rst_def_ev2   .EQU   10h    ;                      x Reset def tmr on evt 2
set_pin       .EQU   20h    ;              x   x     Set output pin on =
set_evt1      .EQU   20h    ;                      x Set output pin on evt1
step          .EQU   40h    ;           x  x      x Go to half resolution
int_evt       .EQU   80h    ;           x            Interrupt on each event
int_max_evt   .EQU   100h   ;           x            Interrupt on max event
opp_act       .EQU   200h   ;              x      x Opp action on timer rst
int_evt2      .EQU   400h   ;                      x Int on event 2
tx            .EQU   800h   ;       x               Use as tx baud rate
rx            .EQU   1000h  ;       x               Use as rx baud rate
vir_cap       .EQU   2000h  ;           x            Cap virt timer each evt
cap_def_ev1   .EQU   2000h  ;                      x Cap def timer on event 1
def_cap       .EQU   4000h  ;           x            Cap def timer on evt max
cap_def_ev2   .EQU   4000h  ;                      x Cap def timer on event 2
evt_plus1     .EQU   8000h  ;                  x     Action on event plus 1
;
;
;
;STANDARD COMPARE COMMAND
;stdcmp <compare value>,<pin>,<actions>,<register label>
;
;compare value: 16-bit timer compare value
;pin: Output pin selection. (D18–D20)
;possible actions:  enable,set_pin,clr_pin,int_cmp,step,
;                   nxt_def,int_trst,opp_act
;register label:    a symbol to be equated to the register containing the
```


PETITIONER ECOBEE
EX. 1010

```
;                   least significant byte of this command
;
STDCMP .MACRO cmpval,pin,actions,lab
       .var   b1,b2,b3,b4
       .if    ((pin.v<1)|(pin.v>8))&((actions.v&enable)=enable)
** ERROR, pin selection is illegal **
       .endif
       .if    (actions.v&0FD90h)!=0
** ERROR, illegal action specified **
       .endif
       .asg   cmpval.v&0FFh,b1.v
       .asg   (cmpval.v>>8)&0FFh,b2.v
       .if    (pin.v<1)|(pin.v>8)
       .asg   1,pin.v
       .endif
       .asg   pin.v-1,pin.v
       .asg   actions.v&63h|pin.v<<2,b3.v
       .asg   actions.v&0Ch|actions.v>>8&2h,b4.v
       .byte  b1.v,b2.v,b3.v,b4.v
       .if    lab.l!=0
       .asg   cmd_st-$+table+4,b1.v
:lab:  .equ   r:b1.v:
       .endif
       .ENDM
;
;CONDITIONAL COMPARE COMMAND
;CONCMP <event compare value>,<time compare value>,<pin>,<actions>,
;<register label>
;
;event compare value: 8-bit value compared to the event counter
;time compare value: 16-bit value compared to the reffered timer
;pin: Output pin (only pin 1-7 are valid)
;possible actions:  nxt_def,int_cmp,set_pin,clr_pin,evt_plus1
;register label:    a symbol to be equated to the register containing the
;                   least significant byte of this command
;
CONCMP .MACRO evcmpval,cmpval,pin,actions,lab
       .var   b1,b2,b3,b4
       .if    (cmpval.v=0)|(cmpval.v=1)
** ERROR, compare value must be greater than 1 **
       .endif
       .asg   cmpval.v-2,cmpval.v
       .if    (pin.v>7)|(pin.v<0)
** ERROR, pin selection is illegal **
       .endif
       .if    (actions.v&07FDCh)!=0
** ERROR, illegal action specified **
       .endif
       .if    (evcmpval.v>255)|(evcmpval.v<0)
** ERROR, Event counter compare value out of range **
       .endif
       .asg   cmpval.v&0FFh,b1.v
       .asg   (cmpval.v>>8)&0FFh,b2.v
       .if    pin.v=0
       .asg   7,pin.v
       .else
       .asg   pin.v-1,pin.v
       .endif
       .asg   80h|actions.v&23h|pin.v<<2|actions.v>>9&40h,b3.v
       .asg   evcmpval.v,b4.v
       .byte  b1.v,b2.v,b3.v,b4.v
       .if    lab.l!=0
       .asg   cmd_st-$+table+4,b1.v
```


PETITIONER ECOBEE
EX. 1010

```
:lab:  .equ   r:b1.v:
       .endif
       .ENDM
;
;DOUBLE EVENT COMMAND
;DEVCMP <event value 1>,<event value 2>,<output pin>,<actions>,
;<register label>
;
;event value 1: 8-bit value compared to the event counter
;event value 2: 8-bit value compared to the event counter
;pin: Output pin
;possible actions:  nxt_def,int_evt1,set_pin,clr_pin,step,opp_act,int_evt2
;                   rst_def_ev2,cap_def_ev1,cap_def_ev2,enable,
;register label:    a symbol to be equated to the register containing the
;                   least significant byte of this command
;
DEVCMP .MACRO e1cmpval,e2cmpval,pin,actions,lab
       .var   b1,b2,b3,b4
       .if    (e1cmpval.v>255)|(e1cmpval.v<0)
** ERROR, Event compare 1 value out of range **
       .endif
       .if    (e2cmpval.v>255)|(e2cmpval.v<0)
** ERROR, Event compare 2 value out of range **
       .endif
       .asg   e1cmpval.v,b1.v
       .asg   e2cmpval.v,b2.v
       .if    (pin.v<1)|(pin.v>8)
       .asg   1,pin.v
** ERROR, pin selection is illegal **
       .endif
       .asg   pin.v-1,pin.v
       .if    (actions.v&09984h)!=0
** ERROR, illegal action specified **
       .endif
       .asg   actions.v&063h|pin.v<<2,b3.v
       .asg   actions.v&18h|actions.v>>8&66h|1,b4.v
       .byte  b1.v,b2.v,b3.v,b4.v
       .if    lab.l!=0
       .asg   cmd_st-$+table+4,b1.v
:lab:  .equ   r:b1.v:
       .endif
       .ENDM
;
;VIRTUAL TIMER DEFINITION
;virtmr <period>,<actions>,<initial timer value>,<register label>
;
;period: The period of the virtual timer, the maximum count plus 1
;possible actions: enable,int_trst
;initial timer value: 16-bit virtual timer initial value.
;register label: a symbol to be equated to the register containing the
;                least significant byte of this definition
;
VIRTMR .MACRO period,actions,tmrval,lab
       .var   b1,b2,b3,b4
       .if    (period.v=0)|(period.v=1)
** Error, Max Timer value must be greater than 2 **
       .endif
       .if    (actions.v&0FFF3h)!=0
** ERROR, illegal action specified **
       .endif
       .asg   period.v-2,period.v
       .asg   tmrval.v&0FEh,b1.v
       .asg   (tmrval.v>>8)&0FFh,b2.v
```


PETITIONER ECOBEE
EX. 1010

```
        .if    ((period.v>>8)&0FFh) > 1Fh
        .asg   (period.v>>9)&70h|(period.v<<3)&80h|08h,b3.v
        .if    (period.v&0Fh)!=0
** ERROR, Max. Timer value truncated in last 4 bits **
        .endif
        .else
        .asg   (period.v<<3)&0F0h|(actions.v&0Ch)>>1,b3.v
        .if    period.v&01h!=0
** ERROR, Max. Timer value truncated in last bit **
        .endif
        .endif
        .if    tmrval.v&01h!=0
** ERROR, Timer value truncated in last bit **
        .endif
        .asg   b3.v|actions.v&0Ch>>1,b3.v
        .asg   (period.v>>5)&0FFh,b4.v
        .byte  b1.v,b2.v,b3.v,b4.v
        .if    lab.l!=0
        .asg   cmd_st-$+table+4,b1.v
:lab:   .equ   r:b1.v:
        .endif
        .ENDM
;
;BAUD RATE TIMER DEFINITION
;BRTMR <maximum count>,<actions>,<initial timer value>,<register label>
;
;maximum count: number that determines the baud rate
;initial timer value: 16-bit virtual timer initial value
;possible actions: rx,tx
;register label: a symbol to be equated to the register containing the
;                least significant byte of this definition
;
BRTMR   .MACRO maxcount,actions,tmrval,lab
        .var   b1,b2,b3,b4
        .if    ((actions.v&0E7FFh)!=0)
** ERROR, illegal action specified **
        .endif
        .asg   tmrval.v&0FEh,b1.v
        .asg   (tmrval.v>>8)&0FFh,b2.v
        .if    ((maxcount.v>>8)&0FFh) > 1Fh
        .asg   (maxcount.v>>9)&70h|(maxcount.v<<3)&80h|08h,b3.v
        .if    maxcount.v&0Fh!=0
** ERROR, Max. Timer value truncated in last 4 bits **
        .endif
        .else
        .asg   (maxcount.v<<3)&0F0h,b3.v
        .if    maxcount.v&01h!=0
** ERROR, Max. Timer value truncated in last bit **
        .endif
        .endif
        .if    tmrval.v&01h!=0
** ERROR, Timer  value truncated in last bit **
        .endif
        .asg   (maxcount.v>>5)&0FFh,b4.v
        .asg   b3.v|((actions.v&1800h)>>10)|1,b3.v
        .byte  b1.v,b2.v,b3.v,b4.v
        .if    lab.l!=0
        .asg   cmd_st-$+table+4,b1.v
:lab:   .equ   r:b1.v:
        .endif
        .ENDM
;
;OFFSET TIMER DEFINITION
```


PETITIONER ECOBEE
EX. 1010

```
;OFSTMR <max event count>,<actions>,<inital value>,<register label>
;
;max event count: The maximum value the event counter may reach before
;being reset.
;possible actions:  step,int_max_evt,enable,rst_def_tmr,
;                   vir_cap,def_cap,int_evt
;initial value: 16-bit initial timer value
;register label: a symbol to be equated to the register containing the
;                least significant byte of this definition
;
OFSTMR .MACRO maxcount,actions,tmrval,lab
       .var   b1,b2,b3,b4
       .if    (maxcount.v>255)|(maxcount.v<0)
** ERROR, Maximum event value out of range **
       .endif
       .if    ((actions.v&09E27h)!=0)
** ERROR, illegal action specified **
       .endif
       .asg   (tmrval.v&0FFh|1),b1.v
       .asg   (tmrval.v>>8)&0FFh,b2.v
       .asg   (actions.v&090h)|((actions.v&8)>>1)|(actions.v&40h)>>6,b3.v
       .asg   b3.v|((actions.v&100h)>>7)|((actions.v>>8)&60h),b3.v
       .asg   maxcount.v&0FFh,b4.v
       .byte  b1.v,b2.v,b3.v,b4.v
       .if    lab.l!=0
       .asg   cmd_st–$+table+4,b1.v
:lab:  .equ   r:b1.v:
       .endif
       .ENDM
```


PETITIONER ECOBEE
EX. 1010

PETITIONER ECOBEE
EX. 1010

PACT Module Sample Routines

J. L. Pettegola
Microcontroller Products—Semiconductor Group
Texas Instruments

PETITIONER ECOBEE
EX. 1010

PETITIONER ECOBEE
EX. 1010

Introduction

This report provides software routines to illustrate the basic functions and characteristics of PACT8 module in the TMS370Cx36 8-bit microcontroller. Each example includes the source code and related timing diagrams. All routines are based on a system clock of 200 ns.

For a complete description of the PACT8 module, refer to the *TMS370Cx36 8-Bit Microcontroller data sheet*, literature number SPNS039, or the *TMS370 Family User's Guide*, literature number SPNU127.

Register Equates

The following are register equates that are used for routines throughout this report:

```
PACTSCR         EQU P040        ;setup control register
CDSTART         EQU P041        ;CMD/DEF area start register
CDEND           EQU P042        ;CMD/DEF area end register
BUFPTR          EQU P043        ;buffer pointer register
DUMMY           EQU P044        ;unused register
SCICTLP         EQU P045        ;PACT SCI control register
RXBUFP          EQU P046        ;PACT SCI receive data register
TXBUFP          EQU P047        ;PACT SCI transmit data register
OPSTATE         EQU P048        ;output pin 1 to 8 state register
CDFLAGS         EQU P049        ;CMD/DEF entry flags register
CPCTL1          EQU P04A        ;setup CP1,CP2 control register
CPCTL2          EQU P04B        ;setup CP3,CP4 control register
CPCTL3          EQU P04C        ;setup CP5,CP6 control register
CPPRE           EQU P04D        ;CP input control register
WDRST           EQU P04E        ;watchdog reset key control register
PACTPR          EQU P04F        ;global function control register
```


PETITIONER ECOBEE
EX. 1010

Using The Hardware Default Timer

Square Wave PWM On OP1

This routine shows how to generate a simple square wave on pulse width modulator (PWM) output OP1.

Figure 1. Square Wave

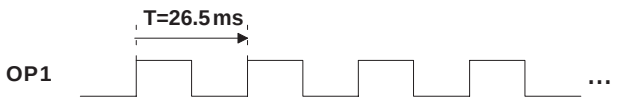

PACT Global Initialization

- Set the watchdog (WD) time out in the global function control register (or disable it if no watchdog is required).
- Define the number command and definitions required to generate the PWM as well as the related number of time slots. Then the minimum divide rate for the prescaled clock can be derived.
- Set and reset the PWM output. No timer definition is required for the default timer, so only two standard compares will be needed.
- Since there are no captures, no capture register or circular buffer is required.
- Define the size of the command and definition area and set the start and end address in the dual port RAM.

1 TS NEEDED, FREQUENCY MAX => SYSCLK / 2 (2 TS AVAILABLE)

PRESCALER VALUE = 00H, FAST MODE

BUFFER NOT USED (MIN), NO CAPTURE => MODE A

START ADDRESS = 01EFH

2 CMD / DEF NEEDED (2 STD COMPARE) => END ADDRESS = 01E8H

PACT RESOLUTION = SYSCLK x 2 = 400nS

OP1 OUTPUT PERIOD = COMPARE VALUE x 2 x RESOLUTION = 26.2 mS

PETITIONER ECOBEE
EX. 1010

Command/Definition (CMD/DEF) Initialization

CMD/DEF 1: STANDARD COMPARE COMMAND ON DEFAULT TIMER (1 time slot or TS)

COMPARE VALUE = 10000H/2 = 8000H => DUTY CYCLE 50%

SET OP1 ON COMPARE = 8000H

Reserved				EN	IR	RA	0	0	ST	CA	Pin Select			IC	NX	Timer Compare Value
0	0	0	0	1	0	0	0	0	0	1	0	0	0	0	0	8000h
D31.....D28				D27	D26	D25	D24	D23	D22	D21	D20..D18			D17	D16	D15.....D0

```
.WORD  00820H,08000H ;SET OP1 ON 08000h (DEFAULT TIMER)
```

CMD/DEF 2: STANDARD COMPARE COMMAND ON DEFAULT TIMER (1 TS)

COMPARE VALUE = 0000H

RESET OP1 ON COMPARE = 8000H

Reserved				EN	IR	RA	0	0	ST	CA	Pin Select			IC	NX	Timer Compare Value
0	0	0	0	1	0	0	0	0	0	0	0	0	0	0	0	8000h
D31.....D28				D27	D26	D25	D24	D23	D22	D21	D20..D18			D17	D16	D15.....D0

```
.WORD  00800H,08000H ;RESET OP1 ON 0000h (DEFAULT TIMER)
```

NOTES:

- By changing the PACT resolution, you can change the PWM period.
- By adding more standard compare commands, you may create more output PWM.
- By changing the compare value, you can change the PWM duty cycle.

PETITIONER ECOBEE
EX. 1010

Square Wave PWM Routine

```
        .TEXT 7000H
        .global deb
;*************************************************************
;       START END ADDRESS DEFINITION
;*************************************************************
STARTAD .EQU 01EFH
PACTPRI .EQU p04F     ; Global function control register
CDSTART .EQU p041     ; Command/definition area start register
CDEND   .EQU p042     ; Command/definition area end register
PACTSCR .EQU p040     ; Setup control register
ENDAD   .EQU 01E8H
;*************************************************************
;       INIT PACT PERIPHERAL FRAME
;*************************************************************
    OR   #003H,PACTPRI                 ;DISABLE WATCHDOG, MODE A
    MOV  #(STARTAD-0100H-080H),CDSTART ;START AD, CMD/DEF INT DIS
    MOV  #(ENDAD-0100H),CDEND          ;END AD
    MOV  #010H,PACTSCR                 ;SYSCLK DIVIDED BY 2 => RESOL=400NS AT
                                       ;20MHZ
;...
;*************************************************************
;       MAIN PGM
;*************************************************************
MAIN
    OR  #020H,PACTSCR         ;ENABLE PACT CMD/DEF AREA
    JMP  $                    ;LOOP MAIN PGM
;*************************************************************
;       INIT PACT CMD/DEF AREA
;*************************************************************
    .sect “CMDEF”,(ENDAD)     ;CMD/DEF SECTION PROGRAM
    .WORD  0800H,0000H        ;RESET OP1 ON 0000h (DEFAULT TIMER)        ERO
    .WORD  0820H,8000H        ;SET OP1 ON 08000h (DEFAULT TIMER)         ERO
;...
```


PETITIONER ECOBEE
EX. 1010

PWM With Period and Duty Cycle Change

Figure 2. PWM With Period and Duty Cycle Change

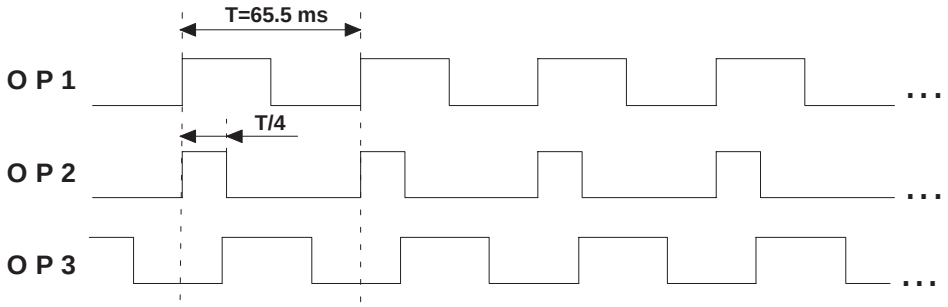

PACT Peripheral Initialization

PACT RESOLUTION 1µS, PRESCALER VALUE = 05H, FAST MODE

BUFFER NOT USED (MIN), NO CAPTURE => MODE A

START ADDRESS = 01EFH, END ADDRESS = 0D8H (6 CMD/DEF NECESSARY)

OP1 OUTPUT PERIOD = 8000H x 2 x 1 µS = 65.5 mS , 50% DUTY CYCLE

OP2 OUTPUT PERIOD = 65.5 mS 25 % DUTY CYCLE , ZERO DELAY

OP3 OUTPUT PERIOD = 65.5 mS 50% DUTY CYCLE , QUARTER PHASE DELAY

PACT Command / Definition Initialization

CMD/DEF 1: STANDARD COMPARE COMMAND ON DEFAULT TIMER (1 TS)

COMPARE VALUE = 10000H/2 = 8000H => DUTY CYCLE 50%

RESET OP1 ON COMPARE, SET ON ZERO

Reserved				EN	IR	RA	0	0	ST	CA	Pin Select			IC	NX	Timer Compare Value
0	0	0	0	1	0	1	0	0	0	0	0	0	0	0	0	8000h
D31.....D28				D27	D26	D25	D24	D23	D22	D21	D20..D18			D17	D16	D15.....D0

```
.WORD  00A00H,08000H ;RESET OP1 ON 08000h (DEFAULT TIMER) , SET ON ZERO
```

CMD/DEF 2: STANDARD COMPARE COMMAND ON DEFAULT TIMER (1 TS)

COMPARE VALUE = 4000H => DUTY CYCLE 25%

RESET OP2 ON COMPARE, SET ON ZERO

Reserved				EN	IR	RA	0	0	ST	CA	Pin Select			IC	NX	Timer Compare Value
0	0	0	0	1	0	1	0	0	0	0	0	0	1	0	0	4000h
D31.....D28				D27	D26	D25	D24	D23	D22	D21	D20..D18			D17	D16	D15.....D0

```
.WORD  00A04H,04000H ;RESET OP2 ON 04000h (DEFAULT TIMER) , SET ON ZERO
```


PETITIONER ECOBEE
EX. 1010

CMD/DEF 3: STANDARD COMPARE COMMAND ON DEFAULT TIMER (1 TS)

COMPARE VALUE = 04000H ; DUTY CYCLE 50%

SET OP3 ON COMPARE.

Reserved				EN	IR	RA	0	0	ST	CA	Pin Select			IC	NX	Timer Compare Value
0	0	0	0	1	0	0	0	0	0	1	0	1	0	0	0	4000h
D31.....D28				D27	D26	D25	D24	D23	D22	D21	D20..D18			D17	D16	D15.....D0

```
.WORD  00828H,04000H ;SET OP3 ON 04000h (DEFAULT TIMER)
```

CMD/DEF 4: STANDARD COMPARE COMMAND ON DEFAULT TIMER (1 TS)

COMPARE VALUE = 0C000H ; DUTY CYCLE 50%

RESET OP3 ON COMPARE

Reserved				EN	IR	RA	0	0	ST	CA	Pin Select			IC	NX	Timer Compare Value
0	0	0	0	1	0	0	0	0	0	0	0	1	0	0	0	C000h
D31.....D28				D27	D26	D25	D24	D23	D22	D21	D20..D18			D17	D16	D15.....D0

```
.WORD  00808H,0C000H ;RESET OP3 ON 0C000h (DEFAULT TIMER)
```


PETITIONER ECOBEE
EX. 1010

Square Wave PWM Routine With Period and Duty Cycle Change

```
        .TEXT 7000H
        .GLOBAL deb
;*********************************************************
;       START END ADDRESS DEFINITION
;*********************************************************
STARTAD .EQU 01EFH
PACTPRI .EQU p04F     ; Global function control register
CDSTART .EQU p041     ; Command/definition area start register
CDEND   .EQU p042     ; Command/definition area end register
PACTSCR .EQU p040     ; Setup control register
ENDAD   .EQU 01D8H
;*********************************************************
;       INIT PACT PERIPHERAL FRAME
;*********************************************************
DEBUT
;...
    OR   #003H,PACTPRI                      ;DISABLE WATCHDOG, MODE A
    MOV  #(STARTAD-0100H-080H),CDSTART      ;START AD, CMD/DEF INT DIS
    MOV  #(ENDAD-0100H),CDEND               ;END AD
    MOV  #014H,PACTSCR                      ;SYSCLK DIVIDED BY 5 =>
                                            ;RESOL=1µS AT 20MHz
;...
;*********************************************************
;       MAIN PGM
;*********************************************************
MAIN
    OR  #020H,PACTSCR           ;ENABLE PACT CMD/DEF AREA
    JMP  $                      ;LOOP MAIN PGM
;*********************************************************
;       INIT PACT CMD/DEF AREA
;*********************************************************
    .sect "CMDEF",(ENDAD)       ;CMD/DEF SECTION PROGRAM
    .WORD  00808H,0C000H        ;RESET OP3 ON 0C000h (DEFAULT TIMER)      ERO
    .WORD  00828H,04000H        ;SET OP3 ON 04000h (DEFAULT TIMER)        ERO
    .WORD  00a04H,04000H        ;RST OP2 ON 04000h (DEFAULT TIMER),SET ON 00h
    .WORD  00a00H,08000H        ;RST OP1 ON 08000h (DEFAULT TIMER),SET ON 00h
...
```


PETITIONER ECOBEE
EX. 1010

Virtual Timer PWM

The standard way to create a PWM is to use a virtual timer definition associated with a standard compare command. The programmer can add any number of virtual timers for an application and is only limited by the number of time slots allowed for the application PACT resolution. This section shows some examples using the virtual timer.

Pulse Width Modulation Example 1

Figure 3. PWM

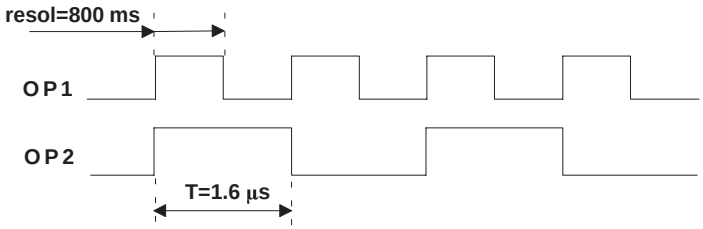

PACT Peripheral Initialization

APPLICATION RESOLUTION MAX = 800 ns => SYSCLK / 4 (9 TS AVAILABLE)

PRESCALER VALUE = 03H, FAST MODE

BUFFER NOT USED , NO CAPTURE => MODE A

START ADDRESS = 01EFH

7 CMD/DEF NEEDED: 2 x (1 VIRTUAL TIMER + 2 STD COMPARE) => END ADDRESS = 01D4H

PACT Command / Definition Initialization

CMD/DEF 1:DUMMY STANDARD COMPARE COMMAND ON DEFAULT TIMER (1 TS)

USE ONLY TO IDENTIFY NEXT COMMAND AS A TIMER DEFINITION

Reserved				EN	IR	RA	0	0	ST	CA	Pin Select			IC	NX	Timer Compare Value
0	0	0	0	0	0	0	0	0	0	0	0	0	0	0	1	0000h
D31.....D28				D27	D26	D25	D24	D23	D22	D21	D20..D18			D17	D16	D15.....D0

```
.WORD  00001H,00000H ;NEXT IS A TIMER DEFINITION
```

CMD/DEF 2: VIRTUAL TIMER 1 DEFINITION (2 TS)

MAX VALUE = 0000H -> INCREMENTED EACH RESOLUTION

Maximum Virtual Timer Value	RN	EN	INT	0	Virtual Timer value	0
000	0	1	0	“0”	0000	“0”
D31.....D23 D22.....D20	D19	D18	D17	D16	D15.....D1	D0

```
.WORD  0004h,0000h ;VIRT1 MAX VALUE = 0000H
```


PETITIONER ECOBEE
EX. 1010

CMD/DEF 3: STANDARD COMPARE COMMAND ON VIRTUAL TIMER 1 (1 TS)

SET OP1 ON VIRTUAL TIMER 1 VALUE = 0000H

Reserved				EN	IR	RA	0	0	ST	CA	Pin Select			IC	NX	Timer Compare Value
0	0	0	0	1	0	0	0	0	0	1	0	0	0	0	0	0000h
D31.....D28				D27	D26	D25	D24	D23	D22	D21	D20..D18			D17	D16	D15.....D0

```
.WORD  0820h,0000h ;SET OP1 ON 0000H VIRT1
```

CMD/DEF 4: STANDARD COMPARE COMMAND ON VIRTUAL TIMER 1 (1 TS)

RESET OP1 ON VIRTUAL TIMER 1 VALUE = 0001H

NEXT IS A TIMER DEFINITION

Reserved				EN	IR	RA	0	0	ST	CA	Pin Select			IC	NX	Timer Compare Value
0	0	0	0	1	0	0	0	0	0	0	0	0	0	0	1	0001h
D31.....D28				D27	D26	D25	D24	D23	D22	D21	D20..D18			D17	D16	D15.....D0

```
.WORD  0801h,0001h ;RST OP1 ON 0001H VIRT1 + NEXT DEF
```

CMD/DEF 5: VIRTUAL TIMER 2 DEFINITION (2 TS)

MAX VALUE = 0001H -> INCREMENTED EACH 2 RESOLUTIONS

Maximum Virtual Timer Value	RN	EN	INT	“0”	Virtual Timer value	“0”
001	0	1	0	“0”	0000	“0”
D31.....D23 D22.....D20	D19	D18	D17	D16	D15.....D1	D0

```
.WORD  0014h,0000h ;VIRT2 MAX VALUE = 0004H
```

CMD/DEF 6: STANDARD COMPARE COMMAND ON VIRTUAL TIMER 1 (1 TS)

SET OP2 ON VIRTUAL TIMER 1 VALUE = 0000H

Reserved				EN	IR	RA	0	0	ST	CA	Pin Select			IC	NX	Timer Compare Value
0	0	0	0	1	0	0	0	0	0	1	0	0	1	0	0	0000h
D31.....D28				D27	D26	D25	D24	D23	D22	D21	D20..D18			D17	D16	D15.....D0

```
.WORD  0824h,0000h ;SET OP2 ON 0000H VIRT2
```

CMD/DEF 7: STANDARD COMPARE COMMAND ON VIRTUAL TIMER 1 (1 TS)

RESET OP2 ON VIRTUAL TIMER 1 VALUE = 0002H

Reserved				EN	IR	RA	0	0	ST	CA	Pin Select			IC	NX	Timer Compare Value
0	0	0	0	1	0	0	0	0	0	0	0	0	1	0	0	0002h
D31.....D28				D27	D26	D25	D24	D23	D22	D21	D20..D18			D17	D16	D15.....D0

```
.WORD  0804h,0002h ;RST OP2 ON 0002H VIRT2
```


PETITIONER ECOBEE
EX. 1010

Figure 4. Timing Diagram

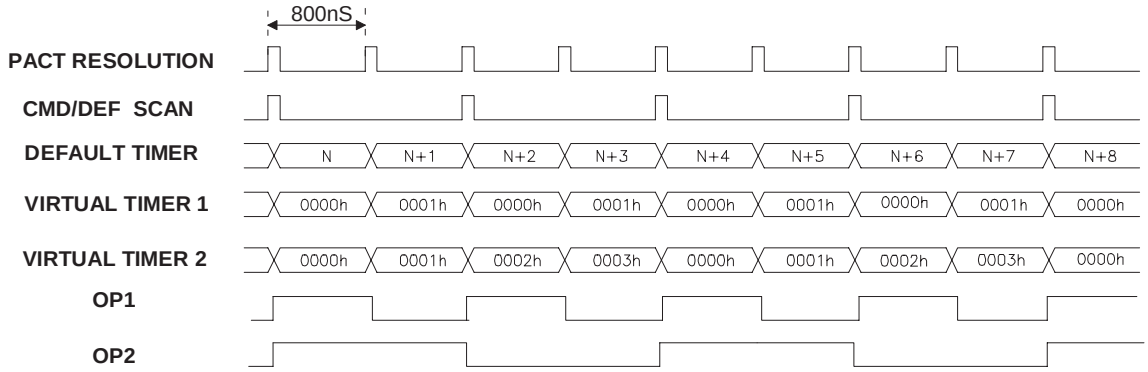

NOTES:
This example shows the maximum speed resolution in normal mode. By changing the timer max value you can modify the PWM period. By changing the compare values you can modify the duty cycle. It is possible to increase the speed resolution by using the step mode.

PETITIONER ECOBEE
EX. 1010

Virtual Timer PWM Routine

```
        .TEXT 7000H
        .GLOBAL deb
;*********************************************************
;       START END ADDRESS DEFINITION
;*********************************************************
STARTAD .EQU 01EFH
PACTPRI .EQU p04F     ; Global function control register
CDSTART .EQU p041     ; Command/definition area start register
CDEND   .EQU p042     ; Command/definition area end register
PACTSCR .EQU p040     ; Setup control register
ENDAD   .EQU 01D4H
;*********************************************************
;       INIT PACT PERIPHERAL FRAME
;*********************************************************
DEBUT
    OR   #003H,PACTPRI                      ;DISABLE WATCHDOG, MODE A
    MOV  #(STARTAD-0100H-080H),CDSTART      ;START AD, CMD/DEF INT DIS
    MOV  #(ENDAD-0100H),CDEND               ;END AD
    MOV  #013H,PACTSCR                      ;SYSCLK DIVIDED BY 4 =>
                                            ;RESOL=800nS AT 20MHz
;*********************************************************
;       MAIN PGM
;*********************************************************
MAIN
    OR  #020H,PACTSCR           ;ENABLE PACT CMD/DEF AREA
    JMP  $                      ;LOOP MAIN PGM
;*********************************************************
;       INIT PACT CMD/DEF AREA
;*********************************************************
    .sect “CMDEF”,(ENDAD)    ;CMD/DEF SECTION PROGRAM
    .WORD  0804h,0002h       ;RST OP2 ON 0002H VIRT2
    .WORD  0824h,0000h       ;SET OP2 ON 0000H VIRT2
    .WORD  0014h,0000h       ;VIRT2 MAX VALUE = 0004H
    .WORD  0801h,0001h       ;RST OP1 ON 0001H VIRT1 + NEXT DEF
    .WORD  0820h,0000h       ;SET OP1 ON 0000H VIRT1
    .WORD  0004h,0000h       ;VIRT1 MAX VALUE = 0002H
    .WORD  0001h,0000h       ;NEXT IS A DEF
```


PETITIONER ECOBEE
EX. 1010

Pulse Width Modulation Example 2

This example show how to combine compare commands and the virtual timer.

Figure 5. PWM

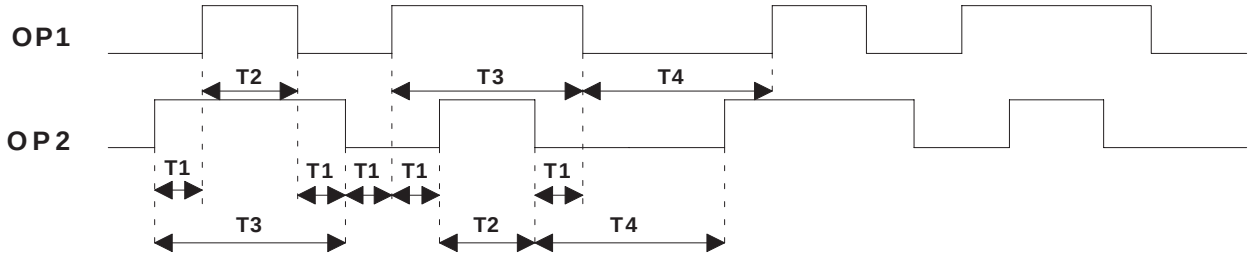

T1 = 1µs, T2 = 2µs, T3 = 4µs, T4 = 4µs

PACT Configuration

PACT RESOLUTION = T1 = 1mS => SYSCLK / 5 -> 12 TS AVAILABLE

CMD/DEF CONFIG: 1 NEXTDEF, 1 VIRT TIMER, 8 STANDARD COMPARE => 11 TS NEEDED

BUFFER NOT USED (MIN), NO CAPTURE => MODE A => START ADDRESS = 01EFh

10 CMD/DEF => END ADDRESS = START ADDRESS - (4 x NB CMD/DEF) + 1 = 01C8h

SEQUENCE PERIOD = T1+T2+3xT1+T2+T4 = 12mS => VIRT MAX VALUE = PERIOD-2 = 000Ah

PACT Command/Definition Initialization

CMD/DEF 1: DUMMY STANDARD COMPARE COMMAND ON DEFAULT TIMER (1 TS)

USE ONLY TO IDENTIFY NEXT ENTRY AS A TIMER DEFINITION

NO ACTION

Reserved				EN	IR	RA	0	0	ST	CA	Pin Select			IC	NX	Timer Compare Value
0	0	0	0	0	0	0	0	0	0	0	0	0	0	0	1	0000h
D31.....D28				D27	D26	D25	D24	D23	D22	D21	D20..D18			D17	D16	D15.....D0

```
.WORD  00001H,0000H ;NEXT IS A TIMER DEFINITION
```

CMD/DEF 2: VIRTUAL TIMER DEFINITION (2 TS)

MAX VALUE = 000AH

ENABLE TIMER

Maximum Virtual Timer Value		RN	EN	INT	0	Virtual Timer value	0
005		0	1	0	“0”	0000	“0”
D31.....D23	D22.....D20	D19	D18	D17	D16	D15.....D1	D0

```
.WORD  00054H,0000H ;MAX VALUE = 000Ah, D19 = 0
```


PETITIONER ECOBEE
EX. 1010

CMD/DEF 3: STANDARD COMPARE COMMAND ON VIRTUAL TIMER (1 TS)

SET OP2 ON COMPARE VALUE = 0001H

Reserved				EN	IR	RA	0	0	ST	CA	Pin Select			IC	NX	Timer Compare Value
0	0	0	0	1	0	0	0	0	0	1	0	0	1	0	0	0001h
D31.....D28				D27	D26	D25	D24	D23	D22	D21	D20..D18			D17	D16	D15.....D0

```
.WORD  00824H,0001H ;SET OP2; FIRST OP2 RISING EDGE,ON COMPARE VALUE = 0001H
```

CMD/DEF 4: STANDARD COMPARE COMMAND ON VIRTUAL TIMER (1 TS)

SET OP1 ON COMPARE VALUE = 0002H

Reserved				EN	IR	RA	0	0	ST	CA	Pin Select			IC	NX	Timer Compare Value
0	0	0	0	1	0	0	0	0	0	1	0	0	0	0	0	0002h
D31.....D28				D27	D26	D25	D24	D23	D22	D21	D20..D18			D17	D16	D15.....D0

```
.WORD  00820H,0002H ;SET OP1; FIRST OP1 RISING EDGE,ON COMPARE VALUE = 0002H
```

CMD/DEF 5: STANDARD COMPARE COMMAND ON VIRTUAL TIMER (1 TS)

RESET OP1 ON COMPARE VALUE = 0004H

Reserved				EN	IR	RA	0	0	ST	CA	Pin Select			IC	NX	Timer Compare Value
0	0	0	0	1	0	0	0	0	0	0	0	0	0	0	0	0004h
D31.....D28				D27	D26	D25	D24	D23	D22	D21	D20..D18			D17	D16	D15.....D0

```
.WORD  00800H,0004H;RESET OP1; FIRST OP1 FALLING EDGE, ON COMPARE VALUE =
0004H
```

CMD/DEF 6: STANDARD COMPARE COMMAND ON VIRTUAL TIMER (1 TS)

RESET OP2 ON COMPARE VALUE = 0005H

Reserved				EN	IR	RA	0	0	ST	CA	Pin Select			IC	NX	Timer Compare Value
0	0	0	0	1	0	0	0	0	0	0	0	0	1	0	0	0005h
D31.....D28				D27	D26	D25	D24	D23	D22	D21	D20..D18			D17	D16	D15.....D0

```
.WORD  00804H,0005H ;RESET OP2 ;FIRST OP2 FALLING EDGE, ON COMPARE VALUE =
                               ;0005H
```

CMD/DEF 7: STANDARD COMPARE COMMAND ON VIRTUAL TIMER (1 TS)

SET OP1 ON COMPARE VALUE = 0006H

Reserved				EN	IR	RA	0	0	ST	CA	Pin Select			IC	NX	Timer Compare Value
0	0	0	0	1	0	0	0	0	0	1	0	0	0	0	0	0006h
D31.....D28				D27	D26	D25	D24	D23	D22	D21	D20..D18			D17	D16	D15.....D0

```
.WORD  00820H,0006H;SET OP1; SECOND OP1 RISING EDGE, ON COMPARE VALUE = 0006H
```


PETITIONER ECOBEE
EX. 1010

CMD/DEF 8: STANDARD COMPARE COMMAND ON VIRTUAL TIMER (1 TS)

SET OP2 ON COMPARE VALUE = 0007H

Reserved				EN	IR	RA	0	0	ST	CA	Pin Select			IC	NX	Timer Compare Value
0	0	0	0	1	0	0	0	0	0	1	0	0	1	0	0	0007h
D31.....D28				D27	D26	D25	D24	D23	D22	D21	D20..D18			D17	D16	D15.....D0

```
.WORD  00824H,0007H;SET OP2; SECOND OP2 RISING EDGE, ON COMPARE VALUE = 0007H
```

CMD/DEF 9: STANDARD COMPARE COMMAND ON VIRTUAL TIMER (1 TS)

RESET OP2 ON COMPARE VALUE = 0009H

Reserved				EN	IR	RA	0	0	ST	CA	Pin Select			IC	NX	Timer Compare Value
0	0	0	0	1	0	0	0	0	0	0	0	0	1	0	0	0009h
D31.....D28				D27	D26	D25	D24	D23	D22	D21	D20..D18			D17	D16	D15.....D0

```
.WORD  00804H, 0009H ;RESET OP2 ;SECOND OP2 FALLING EDGE,ON COMPARE VALUE =
                                ;0009H
```

CMD/DEF 10: STANDARD COMPARE COMMAND ON VIRTUAL TIMER (1 TS)

RESET OP1 ON COMPARE VALUE = 000AH

Reserved				EN	IR	RA	0	0	ST	CA	Pin Select			IC	NX	Timer Compare Value
0	0	0	0	1	0	0	0	0	0	0	0	0	0	0	0	000Ah
D31.....D28				D27	D26	D25	D24	D23	D22	D21	D20..D18			D17	D16	D15.....D0

```
.WORD  00800H,000AH ;RESET OP1 ;SECOND OP1 FALLING EDGE,ON COMPARE VALUE =
                               ;000AH
```


PETITIONER ECOBEE
EX. 1010

Figure 6. PACT Timing Diagram

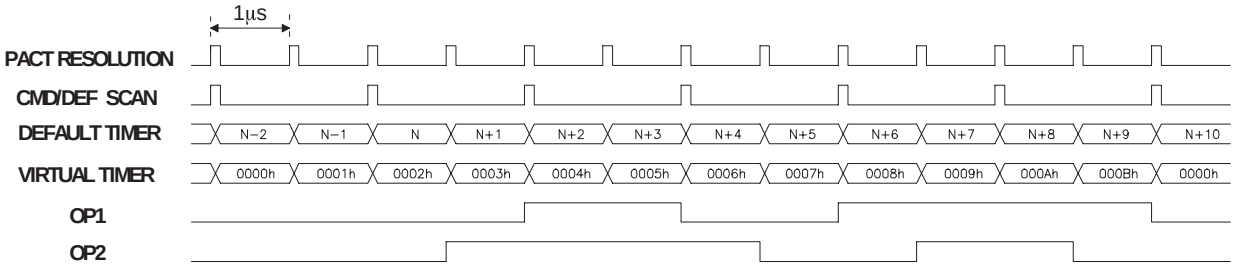

PETITIONER ECOBEE
EX. 1010

Pulse Width Modulation Routine #2

```
        .TEXT 7000H
        .global deb
;*********************************************************
;       START END ADDRESS DEFINITION
;*********************************************************
STARTAD .EQU 01EFH
PACTPRI .EQU p04F     ; Global function control register
CDSTART .EQU p041     ; Command/definition area start register
CDEND   .EQU p042     ; Command/definition area end register
PACTSCR .EQU p040     ; Setup control register
ENDAD   .EQU 01C8H
;*********************************************************
;       INIT PACT PERIPHERAL FRAME
;*********************************************************
DEBUT
;...
    OR   #003H,PACTPRI                      ;DISABLE WATCHDOG, MODE A
    MOV  #(STARTAD-0100H-080H),CDSTART      ;START AD, CMD/DEF INT DIS
    MOV  #(ENDAD-0100H),CDEND               ;END AD
    MOV  #014H,PACTSCR                      ;SYSCLK DIVIDED BY 5 =>
                                            ;RESOL=1uS AT 20MHZ
;...
;*********************************************************
;       MAIN PGM
;*********************************************************
MAIN
    OR  #020H,PACTSCI         ;ENABLE PACT CMD/DEF AREA
    JMP  $                    ;LOOP MAIN PGM
;*********************************************************
;       INIT PACT CMD/DEF AREA
;*********************************************************
    .sect "CMDEF",(ENDAD)     ;CMD/DEF SECTION PROGRAM

    .WORD  00800H,000AH       ;RESET OP1; SECOND OP1 FALLING EDGE,ON COMPARE
                              ;VALUE = 000AH
    .WORD  00804H, 0009H      ;RESET OP2; SECOND OP2 FALLING EDGE,ON COMPARE
                              ;VALUE = 0009H
    .WORD  00824H,0007H       ;SET OP2; SECOND OP2 RISING EDGE, ON COMPARE
                              ;VALUE = 0007H
```


PETITIONER ECOBEE
EX. 1010

```
    .WORD  00820H,0006H       ;SET OP1; SECOND OP1 RISING EDGE, ON COMPARE
                              ;VALUE = 0006H
    .WORD  00804H,0005H       ;RESET OP2; FIRST OP2 FALLING EDGE, ON COMPARE
                              ;VALUE = 0005H
    .WORD  00800H,0004H       ;RESET OP1; FIRST OP1 FALLING EDGE, ON COMPARE
                              ;VALUE = 0004H
    .WORD  00820H,0002H       ;SET OP1; FIRST OP1 RISING EDGE,ON COMPARE
                              ;VALUE = 0002H
    .WORD  00824H,0001H       ;SET OP2; FIRST OP2 RISING EDGE,ON COMPARE
                              ;VALUE = 0001H
    .WORD  00054H,0000H       ;MAX VALUE = 000Ah, D19 = 0
    .WORD  00001H,0000H       ;NEXT IS A TIMER DEFINITION
;...
```

Synchronized Pulses On External Event

The PACT module provides the ability to synchronize output pulses on an external input event. On each CP6 input pin event, an offset timer starts incrementing and continues until the next event. The programmer can combine standard compare, conditional compare, and event compare commands to satisfy his application requirements.

PWM Generation On Each Event

Figure 7. External Event, Event Delay, and Sync Pulses

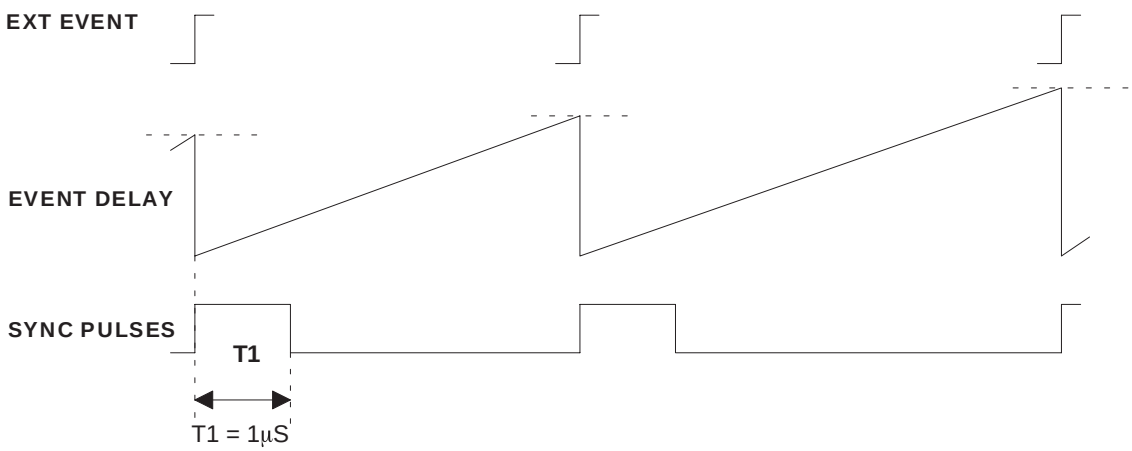

To illustrate this example, we use OP2 as external event. So, it is necessary to connect OP2 and CP6 together.

NOTE: The term “event” refers to the actual external signal that causes a capture on CP1–CP6. The edge that causes the interrupts associated with the CP1–CP6 pins are controlled in peripheral frame 4 through software.

PACT Configuration

PACT RESOLUTION = T1 = 1µS => SYSCLK / 5 -> 12 TS AVAILABLE

CMD/DEF CONFIG: 1 nextdef, 1 virt timer, 1 std compare, 1 offset timer, 2 std compare => 8 TS

PETITIONER ECOBEE
EX. 1010

BUFFER NOT USED (MIN), NO CAPTURE => MODE A => START ADDRESS = 01EFh

6 CMD/DEF => END ADDRESS = START ADDRESS - (4 x NB CMD/DEF) + 1 = 01D8h

MAX EVENT COUNTER VALUE = DON'T CARE (01h for example)

SET OP1 ON 0001h,RESET ON 0002h OF OFFSET TIMER

SET OP2 ON 0002h,RESET ON ZERO OF VIRTUAL TIMER

CONNECT OP2 TO CP6 TO GENERATE EXTERNAL EVENT

CP6 EVENT ONLY (NO CAPTURE). OFFSET TIMER RESET EACH EXTERNAL EVENT

PACT Command / Definition Initialization

CMD/DEF 1: DUMMY STANDARD COMPARE COMMAND ON DEFAULT TIMER (1 TS)

USE ONLY TO IDENTIFY NEXT ENTRY AS A TIMER DEFINITION

NO ACTION

Reserved				EN	IR	RA	0	0	ST	CA	Pin Select			IC	NX	Timer Compare Value
0	0	0	0	0	0	0	0	0	0	0	0	0	0	0	1	0000h
D31.....D28				D27	D26	D25	D24	D23	D22	D21	D20..D18			D17	D16	D15.....D0

```
.WORD  00001H,0000h ;NEXT IS A TIMER DEFINITION
```

CMD/DEF 2: VIRTUAL TIMER DEFINITION (2 TS)

MAX VALUE = 0008H

Maximum Virtual Timer Value	RN	EN	INT	"0"	Virtual Timer value	"0"
004	0	1	0	"0"	0000	"0"
D31.....D23 D22.....D20	D19	D18	D17	D16	D15.....D1	D0

```
.WORD  00044H,0000H ;MAX VALUE = 0008h, D19 = 0
```

CMD/DEF 3: STANDARD COMPARE COMMAND ON VIRTUAL TIMER (1 TS)

SET OP2 ON COMPARE VALUE = 0001H,RESET ON ZERO

NEXT IS A TIMER DEFINITION

Reserved				EN	IR	RA	0	0	ST	CA	Pin Select			IC	NX	Timer Compare Value
0	0	0	0	1	0	1	0	0	0	1	0	0	1	0	1	0001h
D31.....D28				D27	D26	D25	D24	D23	D22	D21	D20..D18			D17	D16	D15.....D0

```
.WORD  00A25H,0001H ;SET OP2 ON COMPARE VALUE = 0001H,RST ON ZERO, NEXT IS A
                    ;DEF
```


PETITIONER ECOBEE
EX. 1010

CMD/DEF 4: OFFSET TIMER DEFINITION (2 TS)

MAX EVENT COUNTER VALUE = 00H (DON'T CARE)

ENABLE TIMER, NO CAPTURE, NO INTERRUPT.

Maximum Event Counter Value	IE	DC	VC	RD	HC	EN	IM	ST	Virtual Timer Offset Value	1
00h	0	0	0	0	0	1	0	0	0000h	1
D31.....D24	D23	D22	D21	D20	D19	D18	D17	D16	D15.....D1	D0

```
.WORD  00004H,0001H ;MAX EVENT COUNTER VALUE = 0000h, NO INTERRUPT, NO
                    ;CAPTURE.
```


PETITIONER ECOBEE
EX. 1010

CMD/DEF 5: STANDARD COMPARE COMMAND ON OFFSET TIMER (1 TS)

SET OP1 ON COMPARE VALUE = 0001H

Reserved				EN	IR	RA	0	0	ST	CA	Pin Select			IC	NX	Timer Compare Value
0	0	0	0	1	0	0	0	0	0	1	0	0	0	0	0	0001h
D31.....D28				D27	D26	D25	D24	D23	D22	D21	D20..D18			D17	D16	D15.....D0

```
.WORD  00820H,0001H  ;SET OP1 ON COMPARE VALUE = 0001h
```

CMD/DEF 6: STANDARD COMPARE COMMAND ON OFFSET TIMER (1 TS)

RESET OP1 ON COMPARE VALUE = 0002H

Reserved				EN	IR	RA	0	0	ST	CA	Pin Select			IC	NX	Timer Compare Value
0	0	0	0	1	0	0	0	0	0	0	0	0	0	0	0	0002h
D31.....D28				D27	D26	D25	D24	D23	D22	D21	D20..D18			D17	D16	D15.....D0

```
.WORD  00800H,0002H ;RESET OP1 ON COMPARE VALUE = 0002h
```

Figure 8. PACT Timing Diagram

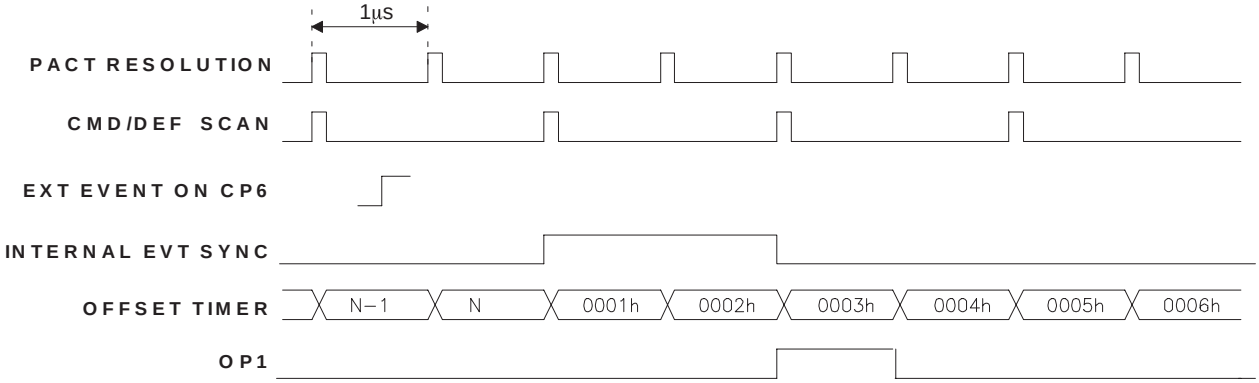

NOTE: In this example the jitter is 1 resolution because of the external event synchronization (OP2 connected to CP6). All timing delays (T1 to T5) have a 1 µs jitter.

PETITIONER ECOBEE
EX. 1010

Routine

```
;It is necessary to connect OP2 and CP6 together to perform this application.
        .text 7000h
        .global deb
;*************************************************************
;       START END ADDRESS DEFINITION
;*************************************************************
STARTAD .EQU 01EFH
PACTPRI .EQU p04F     ; Global function control register
CDSTART .EQU p041     ; Command/definition area start register
CPCTL3  .EQU P04C     ; Set Up CP control register 3
CDEND   .EQU p042     ; Command/definition area end register
PACTSCR .EQU p040     ; Setup control register
ENDAD   .EQU 01D8H
;*************************************************************
;       INIT PACT PERIPHERAL FRAME
;*************************************************************
DEBUT
    OR   #003H,PACTPRI                      ;DISABLE WD, MODE A
    MOV  #(STARTAD-0100H-080H),CDSTART      ;START AD, CMD/DEF INT DIS
    MOV  #(ENDAD-0100H),CDEND               ;END AD
    MOV  #014H,PACTSCR                      ;SYSCLK DIVIDED BY 5 =>
                                            ;RESOL=1uS AT 20MHZ
;*************************************************************
;       MAIN PGM
;*************************************************************
MAIN
    OR  #020H,PACTSCR           ;ENABLE PACT CMD/DEF AREA
    MOV #020H,CPCTL3            ;EVENT CP6 ON RISING EDGE,NO INTERRUPT
    JMP  $                      ;LOOP MAIN PGM
;*************************************************************
;       INIT PACT CMD/DEF AREA
;*************************************************************
    .sect “CMDEF”,(ENDAD)   ;CMD/DEF SECTION PROGRAM
    .WORD  00800H,0002H     ;RESET OP1 ON COMPARE VALUE = 0002h
    .WORD  00820H,0001H     ;SET OP1 ON COMPARE VALUE = 0001h
    .WORD  00004H,0001H     ;MAX EVT COUNTER VALUE = 0000h,NO INT, NO CAPTURE
                            ;O CAPTURE.
    .WORD  00A25H,0002h     ;SET OP2 ON VALUE 0002H,RST ON ZERO,NEXT IS A DEF
    .WORD  00044H,0000h     ;DEF VIRTUAL TIMER
    .WORD  00001H,0000h     ;NEXT IS A TIMER DEFINITION
```


PETITIONER ECOBEE
EX. 1010

PWM Generation On Selected Event

This example shows how conditional compare commands and event compare commands can generate a pwm on selected event.

Figure 9. External Event and PWM

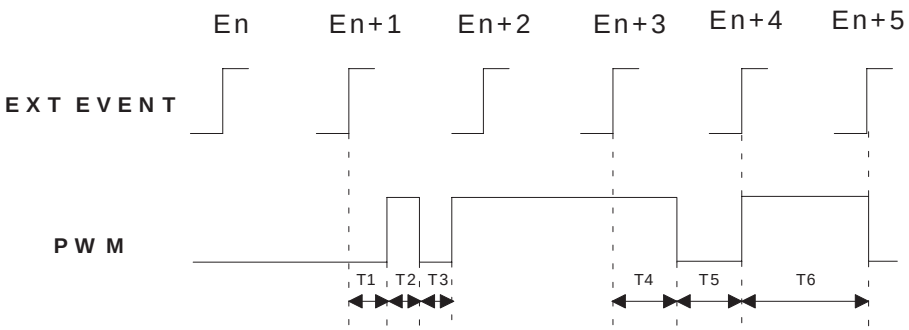

T1 = 4µs, T2 = 1µs, T3 = 2µs or next event, T4 = 3µs, T5 = sync pulse on event

PACT Configuration

PACT RESOLUTION = 1mS => SYSCLK / 5 -> 12 TS AVAILABLE

CMD/DEF CONFIG: 1 NEXTDEF, 1 OFFSET TIMER, 4 COND COMPARE, 1 DBL EVT COMPARE => 4 TS NEEDED

BUFFER NOT USED (MIN), NO CAPTURE => MODE A => START ADDRESS = 01EFh

7 CMD/DEF => END ADDRESS = START ADDRESS - (4 x NB CMD/DEF) + 1 = 01D4h

MAX EVENT COUNTER VALUE = 05h

PACT Command/Definition Initialization

CMD/DEF 1: DUMMY STANDARD COMPARE COMMAND ON DEFAULT TIMER (1 TS)

USE ONLY TO IDENTIFY NEXT ENTRY AS A TIMER DEFINITION

NO ACTION

Reserved				EN	IR	RA	0	0	ST	CA	Pin Select			IC	NX	Timer Compare Value
0	0	0	0	0	0	0	0	0	0	0	0	0	0	0	1	0000h
D31.....D28				D27	D26	D25	D24	D23	D22	D21	D20..D18			D17	D16	D15.....D0

```
.WORD  00001H,0000h ;NEXT IS A TIMER DEFINITION
```


PETITIONER ECOBEE
EX. 1010

CMD/DEF 2: VIRTUAL TIMER DEFINITION (2 TS)

MAX VALUE = 0008H

Maximum Virtual Timer Value	RN	EN	INT	“0”	Virtual Timer value	“0”
004	0	1	0	“0”	0000	“0”
D31.....D23 D22.....D20	D19	D18	D17	D16	D15.....D1	D0

```
.WORD  00044H,0000h ;MAX VALUE = 0008h, D19 = 0
```

CMD/DEF 3: STANDARD COMPARE COMMAND ON VIRTUAL TIMER (1 TS)

SET OP2 ON COMPARE VALUE = 0001H,RESET ON ZERO

NEXT IS A TIMER DEFINITION

Reserved				EN	IR	RA	0	0	ST	CA	Pin Select			IC	NX	Timer Compare Value
0	0	0	0	1	0	1	0	0	0	1	0	0	1	0	1	0001h
D31.....D28				D27	D26	D25	D24	D23	D22	D21	D20..D18			D17	D16	D15.....D0

```
.WORD  00A25H,0001H ;SET OP2 ON COMPARE VALUE = 0001H,RST ON ZERO, NEXT
                    ;IS A DEF
```

CMD/DEF 4: OFFSET TIMER DEFINITION (2 TS)

MAX EVENT COUNTER VALUE = 01H

ENABLE TIMER, NO CAPTURE, NO INTERRUPT.

Maximum Event Counter Value	IE	DC	VC	RD	HC	EN	IM	ST	Virtual Timer Offset Value	1
05h	0	0	0	0	0	1	0	0	0000h	1
D31.....D24	D23	D22	D21	D20	D19	D18	D17	D16	D15.....D1	D0

```
.WORD  00504H,0001H ;OFFSET TIMER DEFINITION, MAX EVENT COUNTER VALUE = 05
```

CMD/DEF 5: CONDITIONAL COMPARE COMMAND ON OFFSET TIMER (1 TS)

EVENT COMPARE VALUE = 01h

SET OP1 ON COMPARE VALUE = 0002H

Event Compare Value	1	SA	CA	Pin Select	IC	NX	Timer Compare Value
01h	1	0	1	000	0	0	0002h
D31.....D24	D23	D22	D21	D20.....D18	D17	D16	D15.....D0

```
.WORD  001A0H,0002H ;SET OP1 ON EVT CMP = 01h AND TIMER CMP = 0002h
```

CMD/DEF 6: CONDITIONAL COMPARE COMMAND ON OFFSET TIMER (1 TS)

EVENT COMPARE VALUE = 01h

RESET OP1 ON COMPARE VALUE = 0003H

Event Compare Value	1	SA	CA	Pin Select	IC	NX	Timer Compare Value
01h	1	0	0	000	0	0	0003h
D31.....D24	D23	D22	D21	D20.....D18	D17	D16	D15.....D0

```
.WORD  00180H,0003H ;RESET OP1 ON EVT CMP = 01h AND TIMER CMP = 0003h
```


PETITIONER ECOBEE
EX. 1010

CMD/DEF 7: CONDITIONAL COMPARE COMMAND ON OFFSET TIMER (1 TS)

EVENT COMPARE VALUE = 01h

SET OP1 ON COMPARE VALUE = 0005H

SAME ACTION ON NEXT EVENT IF NECESSARY

Event Compare Value	1	SA	CA	Pin Select	IC	NX	Timer Compare Value
01h	1	1	1	000	0	0	0005h
D31.....D24	D23	D22	D21	D20.....D18	D17	D16	D15.....D0

```
.WORD  001E0H,0005H ;SET OP1 ON EVT CMP = 01h, TIMER CMP = 0009h, SAME ACTION
```

CMD/DEF 8: CONDITIONAL COMPARE COMMAND ON OFFSET TIMER (1 TS)

EVENT COMPARE VALUE = 03h

RESET OP1 ON COMPARE VALUE = 0001H

SAME ACTION ON NEXT EVENT IF NECESSARY

Event Compare Value	1	SA	CA	Pin Select	IC	NX	Timer Compare Value
03h	1	1	0	000	0	0	0001h
D31.....D24	D23	D22	D21	D20.....D18	D17	D16	D15.....D0

```
.WORD  003C0H,0001H ;RESET OP1 ON EVT CMP = 03h, TIMER CMP = 0003h, SAME
                    ;ACTION
```

CMD/DEF 9: DOUBLE EVENT COMPARE COMMAND ON OFFSET TIMER (1 TS)

EVENT1 COMPARE VALUE = 04h, EVENT2 COMPARE VALUE = 05h

SET OP1 ON EVENT1 COMPARE, RESET OP1 ON EVENT2 COMPARE

0	0	0	0	1	0	1	0	1	0	1	000	0	0	05h	04h
D31	D30	D29	D28	D27	D26	D25	D24	D23	D22	D21	D20...D18	D17	D16	D15.....D8	D7.....D0

```
.WORD  00B20H.0504H ;SET OP1 ON EVT1 CMP = 04h, RESET OP1 ON EVENT2 CMP = 05h
```


PETITIONER ECOBEE
EX. 1010

Figure 10. PACT Timing Diagrams

Action On Event N+1

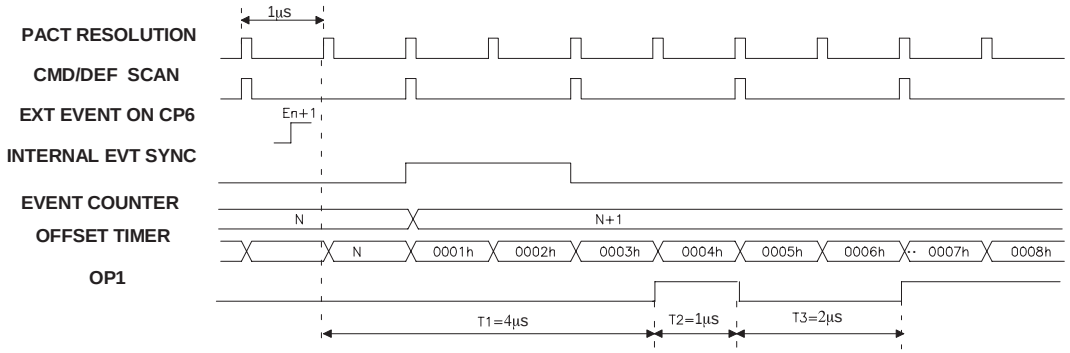

Action On Event N+3, N+4, N+5

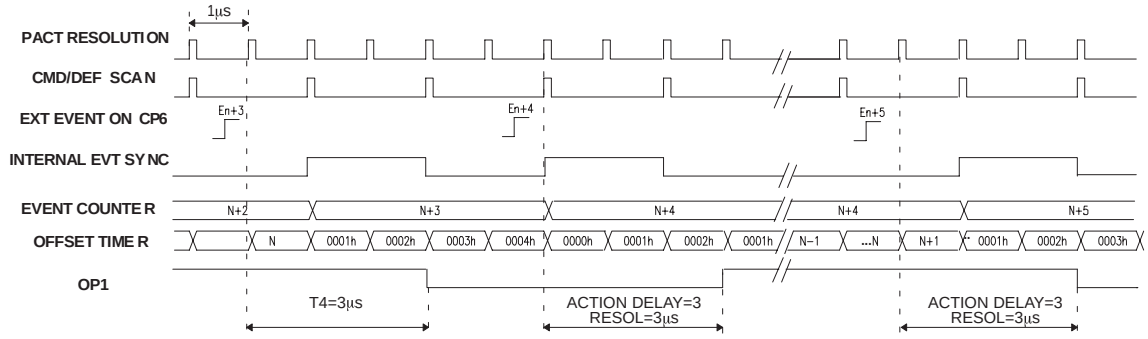

NOTE: In this example the jitter is 1 resolution because of the external event synchronization (OP2 connected to CP6). All timing delays (T1 to T5) have a1 µs jitter.

PETITIONER ECOBEE
EX. 1010

PWM Generation on Selected Event Routine

```
;It is necessary to connect OP2 and CP6 together to perform this application.
        .TEXT 7000H
        .GLOBAL deb
;*********************************************************
;       START END ADDRESS DEFINITION
;*********************************************************
STARTAD .EQU 01EFH
PACTPRI .EQU p04F     ; Global function control register
CDSTART .EQU p041     ; Command/definition area start register
CDEND   .EQU p042     ; Command/definition area end register
CPCTL3  .EQU P04C     ; Set Up CP control register 3
PACTSCR .EQU p040     ; Setup control register
ENDAD   .EQU 01ccH
;*********************************************************
;       INIT PACT PERIPHERAL FRAME
;*********************************************************
    OR   #003H,PACTPRI                      ;DISABLE WD, MODE A
    OR     #006H,CPPRE                      ;RESET EVENT COUNTER,CP6 EVENT
                                            ;ONLY (NO CAPTURE)
    MOV  #(STARTAD-0100H-080H),CDSTART      ;START AD, CMD/DEF INT DIS
    MOV  #(ENDAD-0100H),CDEND               ;END AD
    MOV  #014H,PACTSCR                      ;SYSCLK DIVIDED BY 5 =>
                                            ;RESOL=1µS AT 20MHZ
    AND   #0FDH,CPPRE                     ;DISABLE RESET EVENT COUNTER
;*********************************************************
;       MAIN PGM
;*********************************************************
MAIN
    OR  #020H,PACTSCR         ;ENABLE PACT CMD/DEF AREA
    MOV #020H,CPCTL3          ;EVENT CP6 ON RISING EDGE
    JMP  $                    ;LOOP MAIN PGM
;*********************************************************
;       INIT PACT CMD/DEF AREA
;*********************************************************
    .sect “CMDEF”,(ENDAD)   ;CMD/DEF SECTION PROGRAM
    .WORD  00B20H,0504H     ;SET OP1 ON EVT1 CMP=04h,RST OP1 ON EVENT2
                            ;CMP = 05H = 05h
    .WORD  003C0H,0001H     ;RST OP1 ON EVT CMP=03h,TIMER CMP=0003h,SAME
                            ;ACTIONAME ACTION
```


PETITIONER ECOBEE
EX. 1010

```
    .WORD  001E0H,0005H     ;SET OP1 ON EVT CMP=01h,TIMER CMP=0009h,SAME
                            ;ACTION ACTION
    .WORD  00180H,0003H     ;RST OP1 ON EVT CMP=01h,TIMER CMP=0003h
    .WORD  001A0H,0002H     ;SET OP1 ON EVT CMP=01h,TIMER CMP=0002h
    .WORD  00504H,0001H     ;OFFSET TIMER DEFINITION, MAX EVENT VALUE = 05H
                            ; = 05
    .WORD  00A25H,0002h     ;SET OP2 ON VALUE 0002H,RST ON ZERO,NEXT IS A DEF
    .WORD  00044H,0000h     ;DEF VIRTUAL TIMER
    .WORD  00001H,0000h     ;NEXT IS A TIMER DEFINITION
;...
```

Pulse Width Measurement

To perform a pulse width measurement, the PACT module allows a dedicated 32-bit capture register for two or four input pins (depending on mode A or B initialization) and a programmable circular buffer in which it is possible to store 32 or 16 capture bits. Each PACT input pin (CP1 to CP6) has its own interrupt source, which can inform the CPU that a capture has occurred. The purpose of these examples is to show how the PACT capture functions can be used.

Using Dedicated 32-Bit Capture Registers

This example shows how it can measure a delay between two events (one on CP1 the other on CP2).

Figure 11. CP1 and CP2 Events

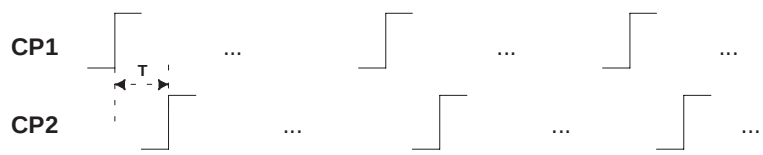

T = CP2 CAPTURE - CP1 CAPTURE

PACT Configuration

PACT RESOLUTION: Defines the PACT precision. External events faster than the PACT resolution will not be captured. For our example, the PACT resolution is: SYSCLK / 5 = 1 ms AT 20 MHz

Generate a PWM on OP1 connected to CP1 and CP2 in order to perform CP1,CP2 events.

=> 3 CMD/DEF : 1 dummy next def , 1 virtual timer DEFINITION , 1 standard compare action on OP1.

BUFFER NOT USED, 2 DEDICATED CAPTURE (CP1, CP2) => MODE A

CP1 CAPTURE ON RISING EDGE OF OP1.

CP2 CAPTURE ON FALLING EDGE OF OP1.

PETITIONER ECOBEE
EX. 1010

PACT Command / Definition Initialization

CMD/DEF 1: DUMMY STANDARD COMPARE COMMAND ON DEFAULT TIMER (1 TS)

USE ONLY TO IDENTIFY NEXT ENTRY AS A TIMER DEFINITION

NO ACTION

Reserved				EN	IR	RA	0	0	ST	CA	Pin Select			IC	NX	Timer Compare Value
0	0	0	0	0	0	0	0	0	0	0	0	0	0	0	1	0000h
D31.....D28				D27	D26	D25	D24	D23	D22	D21	D20..D18			D17	D16	D15.....D0

```
.WORD  00001H,0000h ;NEXT IS A TIMER DEFINITION
```

CMD/DEF 2: VIRTUAL TIMER DEFINITION (2 TS)

MAX VALUE = 1000H

Maximum Virtual Timer Value	RN	EN	INT	"0"	Virtual Timer value	0
080	0	1	0	"0"	0000	"0"
D31.....D23 D22.....D20	D19	D18	D17	D16	D15.....D1	D0

```
.WORD  00804H,0000H ;MAX VALUE = 1000h, D19 = 0
```

CMD/DEF 3: STANDARD COMPARE COMMAND ON VIRTUAL TIMER (1 TS)

RESET OP1 ON COMPARE VALUE = 0010H,SET ON ZERO

Reserved				EN	IR	RA	0	0	ST	CA	Pin Select			IC	NX	Timer Compare Value
0	0	0	0	1	0	1	0	0	0	0	0	0	1	0	1	0010h
D31.....D28				D27	D26	D25	D24	D23	D22	D21	D20..D18			D17	D16	D15.....D0

```
.WORD  00A00H,0010H ;RST OP2 ON COMPARE VALUE = 0010H,SET ON ZERO, NEXT IS A
                    ;DEF
```

Pulse Width Measurement Routine

```
;It is necessary to connect OP1 , CP1 and CP2 together to perform this
;application.
        .TEXT 7000H
        .global deb
;*********************************************************
STARTAD .EQU 01EFH
PACTPRI .EQU p04F     ; Global function control register
CDSTART .EQU p041     ; Command/definition area start register
CDEND   .EQU p042     ; Command/definition area end register
CPCTL1  .EQU P04A     ; Set Up CP control register 3
CPPRE   .EQU P04D     ; CP input control register
PACTSCR .EQU p040     ; Setup control register
ENDAD   .EQU 01E4H
;*********************************************************
```


PETITIONER ECOBEE
EX. 1010

```
;       INIT PACT PERIPHERAL FRAME
;*********************************************************
    OR   #003H,PACTPRI                      ;DISABLE WATCHDOG, MODE A
    MOV  #010H,B
    LDSP
    MOV   #000H,CPPRE                       ;INPUT CAPTURE PRESCALER DIVIDE
                                            ;BY 1
    MOV  #(STARTAD-0100H-080H),CDSTART      ;START AD, CMD/DEF INT DIS
    MOV  #(ENDAD-0100H),CDEND               ;END AD
    MOV  #013H,PACTSCR                      ;SYSCLK DIVIDED BY 4 =>
                                            ;RESOL=800uS AT 20MHZ
;*********************************************************
;       MAIN PGM
;*********************************************************
MAIN
    OR  #020H,PACTSCR   ;ENABLE PACT CMD/DEF AREA
   EINT                 ;ENABLE INTERRUPT
MN  MOV   #092H,CPCTL1  ;CAPTURE ON CP1 RISE AND CP2 FALL,INT CP2 ENABLE BLE
   JMP  MN              ;LOOP MAIN PGM
;*********************************************************
;      INTERRUPT CAPTURE CP2
;*********************************************************
ITCP2
     MOV   #000H,CPCTL1 ;DISABLE CP1/CP2 CAPTURE AND CLEAR ITCP2 FLAG
; STORE CP1 CAPTURE IN REGISTERS R0F9, R0FA, R0FB
    MOV   &01F9H,A
    MOV   A,R0F9
    MOV   &01FAH,A
    MOV   A,R0FA
    MOV   &01FBH,A
    MOV   A,R0FB
; STORE CP2 CAPTURE IN REGISTERS R0F5, R0F6, R0F7
    MOV   &01F5H,A
    MOV   A,R0F5
    MOV   &01F6H,A
    MOV   A,R0F6
    MOV   &01F7H,A
    MOV   A,R0F7
;CP2 PERIOD MEASUREMENT (T2)
    SUB     R0FB,R0F7
```


PETITIONER ECOBEE
EX. 1010

```
    SBB     R0FA,R0F6
    SBB     R0F9,R0F5
; RESULT STORED IN REGISTERS R0E5, R0E6, R0E7
    MOV    R0F7,R0E7
    MOV    R0F6,R0E6
    MOV    R0F5,R0E5
;RETURN TO MAIN PGM
    RTI
;*********************************************************
;       CP2 INTERRUPT VECTORS
;*********************************************************
    .sect “VECT”,07FBAH  ;PACT INTERRUPT VECTOR
    .WORD  ITCP2         ;CP2 IT VECTOR
;*********************************************************
;       INIT PACT CMD/DEF AREA
;*********************************************************
    .sect “CMDEF”,(ENDAD)    ;CMD/DEF SECTION PROGRAM
    .WORD  0A00h,0010h       ;RST OP1 ON 0010H VIRT1,SET ON ZERO
    .WORD  8004h,0000h       ;VIRT1 MAX VALUE = 8000H
    .WORD  0001h,0000h       ;NEXT IS A DEF
```

NOTES:

- In this example, the jitter is 1 resolution because of the external event synchronization (OP1 connected to CP1 and CP2). All timing delays (T1 to T5) have 1 ms jitter. The jitter average is 1/2 resolution in case of asynchronous external events.
- The measurement value is stored in registers R0E5,R0E6,R0E7 (LSB). It is always equal to the CMD/DEF 3 compare value (if OP1 connected to CP1 and CP2).
- By changing CMD/DEF 3 compare value, you change the OP1 falling edge and so increase or decrease CP1/CP2 delay.

PETITIONER ECOBEE
EX. 1010

Using The Circular Buffer Registers

The circular buffer is used to capture CP3, CP4, CP5, or CP6. It is very useful in case of fast event occurrences when the CPU does not enough time to treat all events and discharges them from data storage manipulation. The circular buffer has a buffer pointer register in the PACT peripheral frame (P043) which points to the next 32-bit buffer register address (see *TMS370 Family User's Guide*). An interrupt buffer is generated if the buffer is half or completely full. One capture is generated if two events (CP5 and CP6) arrive at the same time.

In this example, the input capture, CP6, is stored in the circular buffer and a period measurement is made on each event.

Figure 12. CP6 PWM

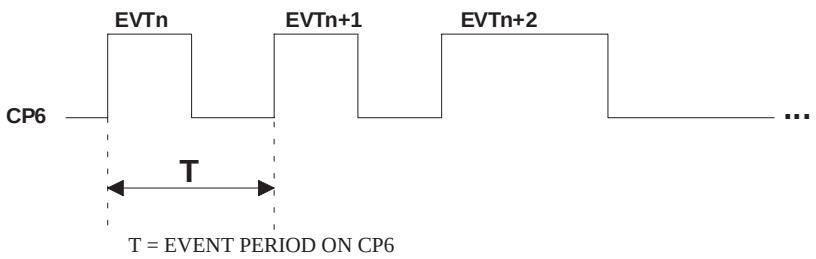

PACT Configuration

PACT RESOLUTION: Defines the PACT precision. External events faster than the PACT resolution will not be captured. For our example, the PACT resolution is: SYSCLK / 5 = 1ms AT 20 MHz

We generate a PWM on OP1 connected to CP6 in order to perform CP6 events.

=> 3 CMD/DEF : 1 dummy next def , 1 virtual timer DEFINITION , 1 standard compare action on OP1.

BUFFER USED TO CAPTURE CP6 EVENTS. SIZE = 4 x 32 BITS REGISTERS IN MODE A, INT BUFF

CP6 CAPTURE ON RISING EDGE.

PACT Command/Definition Initialization

CMD/DEF 1: DUMMY STANDARD COMPARE COMMAND ON DEFAULT TIMER (1 TS)

USE ONLY TO IDENTIFY NEXT ENTRY AS A TIMER DEFINITION

NO ACTION

Reserved				EN	IR	RA	0	0	ST	CA	Pin Select			IC	NX	Timer Compare Value
0	0	0	0	0	0	0	0	0	0	0	0	0	0	0	1	0000h
D31.....D28				D27	D26	D25	D24	D23	D22	D21	D20..D18			D17	D16	D15.....D0

```
.WORD  00001H,0000h ;NEXT IS A TIMER DEFINITION
```


PETITIONER ECOBEE
EX. 1010

CMD/DEF 2: VIRTUAL TIMER DEFINITION (2 TS)

MAX VALUE = 0008H

Maximum Virtual Timer Value	RN	EN	INT	0	Virtual Timer value	0
004	0	1	0	“0”	0000	“0”
D31.....D23 D22.....D20	D19	D18	D17	D16	D15.....D1	D0

```
.WORD  00044H,0000H ;MAX VALUE = 0008h, D19 = 0
```

CMD/DEF 3: STANDARD COMPARE COMMAND ON VIRTUAL TIMER (1 TS)

Reserved				EN	IR	RA	0	0	ST	CA	Pin Select			IC	NX	Timer Compare Value
0	0	0	0	1	0	1	0	0	0	0	0	0	1	0	1	0001h
D31.....D28				D27	D26	D25	D24	D23	D22	D21	D20..D18			D17	D16	D15.....D0

```
.WORD  00A00H,000H1 ;RST OP1 ON COMPARE VALUE = 0001H,SET ON ZERO, NEXT
                    ;IS A DEF
```


PETITIONER ECOBEE
EX. 1010

Using the Circular Buffer Registers Routine

```
;It is necessary to connect OP1 and CP6 together to perform this application.

        .TEXT 7000H
        .global deb
;*********************************************************
STARTAD .EQU 01E3H         ;size buffer = 4 registers
PACTPRI .EQU p04F     ; Global function control register
CDSTART .EQU p041     ; Command/definition area start register
CDEND   .EQU p042     ; Command/definition area end register
BUFPTR  .EQU p043     ; Buffer pointer control register
CPCTL3  .EQU P04C     ; Set Up CP control register 3
CPPRE   .EQU P04D     ; CP input control register
PACTSCR .EQU p040     ; Setup control register
ENDAD   .EQU 01d8H
;*********************************************************
;       INIT PACT PERIPHERAL FRAME
;*********************************************************
    OR   #003H,PACTPRI     ;DISABLE WATCHDOG, MODE A
    MOV  #010H,B
    LDSP
    MOV  #002H,CPPRE                        ;RST EVENT COUNTER,NO CAPTURE
                                            ;PRESCALER
    MOV  #(STARTAD-0100H-080H),CDSTART      ;START AD, CMD/DEF INT DIS
    MOV  #(ENDAD-0100H),CDEND               ;END AD
    MOV  #013H,PACTSCR                      ;SYSCLK DIVIDED BY 4 =>
                                            ;RESOL=800nS AT 20MHz
    MOV  #0F2H,P043                         ;INIT BUFFER TO THE TOP
    MOV   #080H,CPPRE                       ; BUFFER INTERRUPT ENABLE,ENABLE
                                            ;EVENT COUNTER
;*********************************************************
;       MAIN PGM
;*********************************************************
    OR  #020H,PACTSCR   ;ENABLE PACT CMD/DEF AREA
    EINT                ;ENABLE INTERRUPT
MN  MOV  #020H,CPCTL3   ;CAPTURE ON RISING EDGE CP6, NO INTERRUPT
    JMP  MN             ;LOOP MAIN PGM
;*********************************************************
;      INTERRUPT BUFFER
```


PETITIONER ECOBEE
EX. 1010

```
;*********************************************************
ITBUFF
     MOV #000H,CPCTL3   ;DISABLE BUFFER CAPTURE AND CLEAR ITBUFF FLAG
     AND #0BFH,CPPRE    ;CLEAR ITBUF FLAG
     MOV BUFPTR,A       ;TEST IF BUFFER FULL
     CMP #0F2H,A
     JZ BFULL
BHALF
    MOV   #0F3H,B       ;B = STORAGE POINTER
    CALL STORE
;CP6 PERIOD MEASUREMENT
    SUB     R0F3,R0EF
    SBB     R0F2,R0EE
    SBB     R0F1,R0ED
;RESULT STORED IN REGISTER R0ED, R0EE, R0EF
;RETURN TO MAIN PGM
    RTI
BFULL
    MOV   #0EBH,B       ;B = STORAGE POINTER
    CALL STORE
;CP6 PERIOD MEASUREMENT
    SUB     R0EB,R0E7
    SBB     R0EA,R0E6
    SBB     R0E9,R0E5
;RESULT STORED IN REGISTER R0E5, R0E6, R0E7
;RETURN TO MAIN PGM
    RTI
;*********************************************************
;      SUBROUTINE STORE
;*********************************************************
STORE
; STORE BUFFER CAPTURE 1 IN REGISTERS R0F0,R0F1, R0F2, R0F3
    MOV   B,R090 ;R090 = END STORAGE POINTER
    SUB   #009H,R090
LOOP
    MOV   *0100H[B],A
    MOV   A,*0[B]
    DEC B
```


PETITIONER ECOBEE
EX. 1010

```
    CMP R090,B
    JNZ  LOOP
    RTS
;*********************************************************
;       BUFFER INTERRUPT VECTOR
;*********************************************************
    .sect “VECTBUFF”,07FB0H      ;BUFFER INTERRUPT VECTOR
    .WORD  ITBUFF       ;BUFF IT VECTOR
;*********************************************************
;       INIT PACT CMD/DEF AREA
;*********************************************************
    .sect “CMDEF”,(ENDAD)    ;CMD/DEF SECTION PROGRAM

    .WORD  0A00h,0001h       ;RST OP1 ON 0001H VIRT1,SET ON ZERO
    .WORD  0044h,0000h       ;VIRT1 MAX VALUE = 0008H
    .WORD  0001h,0000h       ;NEXT IS A DEF
;...
```

NOTES:

- In this example the jitter equals one resolution because of the external event synchronization (OP1 connected to CP6). All timing delays (T) have a 1 ms jitter. The jitter average is half resolution in case of asynchronous external events.
- The measurement value is stored in registers R0E5,R0E6,R0E7 (LSB) or R0ED, R0EE, R0EF (LSB).
- By changing CMD/DEF 2 virtual timer maximum values, the OP1 period changes, and increases or decreases the CP6 event delay.

PETITIONER ECOBEE
EX. 1010

Using PACT Step Mode

The step mode is useful for applications that require more time slots than normally allowed for a specific resolution. To illustrate, look at the square wave PWM. This example is done with a resolution of 1µs for 20MHz. It shows a PWM activity on OP1 at maximum speed (2µs square period). All the time slots available are used to generate OP1 and OP2 PWM. It is possible to improve significantly the PWM speed by changing the resolution and using the STEP mode in this example.

Figure 13. Step Mode PWM

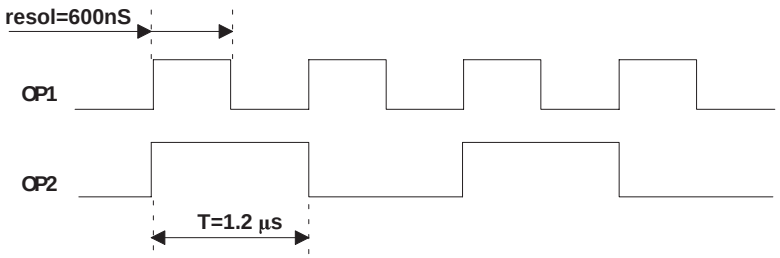

PACT Configuration

PACT RESOLUTION = 600nS => SYSCLK / 3 -> 5 x 2 TS AVAILABLE in STEP MODE = 10 TS

CMD/DEF CONFIG: 1 STEP 1 NEXTDEF, 2 VIRT TIMER, 4 STANDARD COMPARE => 10 TS

BUFFER NOT USED (MIN), NO CAPTURE => MODE A => START ADDRESS = 01EFh

8 CMD/DEF => END ADDRESS = START ADDRESS - (4 x NB CMD/DEF) + 1 + 1 (STEP MODE) = 01D4h

PETITIONER ECOBEE
EX. 1010

PACT Command / Definition Initialization

CMD/DEF 1: DUMMY STANDARD COMPARE COMMAND ON DEFAULT TIMER (1 TS)

USE ONLY TO ENABLE STEP MODE, NO ACTION

Reserved				EN	IR	RA	0	0	ST	CA	Pin Select			IC	NX	Timer Compare Value
0	0	0	0	0	0	0	0	0	1	0	0	0	0	0	0	0000h
D31.....D28				D27	D26	D25	D24	D23	D22	D21	D20..D18			D17	D16	D15.....D0

```
.WORD  0040h,0000h ;STEP ENABLE
```

CMD/DEF 2:DUMMY STANDARD COMPARE COMMAND ON DEFAULT TIMER (1 TS)

USE ONLY TO IDENTIFY NEXT COMMAND AS A TIMER DEFINITION

Reserved				EN	IR	RA	0	0	ST	CA	Pin Select			IC	NX	Timer Compare Value
0	0	0	0	0	0	0	0	0	0	0	0	0	0	0	1	0000h
D31.....D28				D27	D26	D25	D24	D23	D22	D21	D20..D18			D17	D16	D15.....D0

```
.WORD  00001H,00000H ;NEXT IS A TIMER DEFINITION
```

CMD/DEF 3: VIRTUAL TIMER 1 DEFINITION (2 TS)

MAX VALUE = 0000H

Maximum Virtual Timer Value	RN	EN	INT	0	Virtual Timer value	“0”
000	0	1	0	“0”	0000	“0”
D31.....D23 D22.....D20	D19	D18	D17	D16	D15.....D1	D0

```
.WORD  0004h,0000h ;VIRT1 MAX VALUE = 0000H
```

CMD/DEF 4: VIRTUAL TIMER 2 DEFINITION (2 TS)

MAX VALUE = 0000H

Maximum Virtual Timer Value	RN	EN	INT	0	Virtual Timer value	“0”
000	0	1	0	“0”	0000	“0”
D31.....D23 D22.....D20	D19	D18	D17	D16	D15.....D1	D0

```
.WORD  0004h,0000h ;VIRT2 MAX VALUE = 0000H
```

CMD/DEF 5: STANDARD COMPARE COMMAND ON VIRTUAL TIMER 1 (1 TS)

RESET OP1 ON VIRTUAL TIMER 1 VALUE = 0001H

INVERTED ACTION (SET OP1) ON ZERO VIRT1

Reserved				EN	IR	RA	0	0	ST	CA	Pin Select			IC	NX	Timer Compare Value
0	0	0	0	1	0	1	0	0	0	0	0	0	0	0	0	0001h
D31.....D28				D27	D26	D25	D24	D23	D22	D21	D20..D18			D17	D16	D15.....D0

```
.WORD  0A00h,0001h ;RESET OP1 ON 0001H VIRT1,INV ACTION ON ZERO VIRT1
```


PETITIONER ECOBEE
EX. 1010

CMD/DEF 6: STANDARD COMPARE COMMAND ON VIRTUAL TIMER 2 (1 TS)

RESET OP1 ON VIRTUAL TIMER 2 VALUE = 0001H

INVERTED ACTION (SET OP1) ON ZERO VIRT2

Reserved				EN	IR	RA	0	0	ST	CA	Pin Select			IC	NX	Timer Compare Value
0	0	0	0	1	0	1	0	0	0	0	0	0	0	0	0	0001h
D31.....D28				D27	D26	D25	D24	D23	D22	D21	D20..D18			D17	D16	D15.....D0

```
.WORD  0A00h,0001h ;RESET OP1 ON 0001H VIRT2,INV ACTION ON ZERO VIRT2
```

CMD/DEF 7: STANDARD COMPARE COMMAND ON VIRTUAL TIMER 1 (1 TS)

SET OP2 ON VIRTUAL TIMER 1 VALUE = 0001H

Reserved				EN	IR	RA	0	0	ST	CA	Pin Select			IC	NX	Timer Compare Value
0	0	0	0	1	0	0	0	0	0	1	0	0	1	0	0	0001h
D31.....D28				D27	D26	D25	D24	D23	D22	D21	D20..D18			D17	D16	D15.....D0

```
.WORD  0824h,0001h ;SET OP2 ON 0001H VIRT1
```

CMD/DEF 8: STANDARD COMPARE COMMAND ON VIRTUAL TIMER 1 (1 TS)

RESET OP2 ON VIRTUAL TIMER 1 VALUE = 0000H

Reserved				EN	IR	RA	0	0	ST	CA	Pin Select			IC	NX	Timer Compare Value
0	0	0	0	1	0	0	0	0	0	0	0	0	1	0	0	0000h
D31.....D28				D27	D26	D25	D24	D23	D22	D21	D20..D18			D17	D16	D15.....D0

```
.WORD  0804h,0000h ;RST OP2 ON 0000H VIRT2
```

The step mode sequence is as follows: dummy command 1 -> dummy command 2 -> virtual timer 1 -> std comp 11 -> std comp 12 -> virtual timer 2 -> std comp21 -> std comp 22 -> dummy command 1 ...

Specify (in the peripheral file frame) the address of the first command to be executed in the start address register (P041) and the address of the last command to be executed in the end address register (P042).

In step mode, each scan takes four resolutions. The precision is still equal to the resolution, but the timers are incremented differently (see timing diagram below).

Figure 14. PACT Timing Diagram

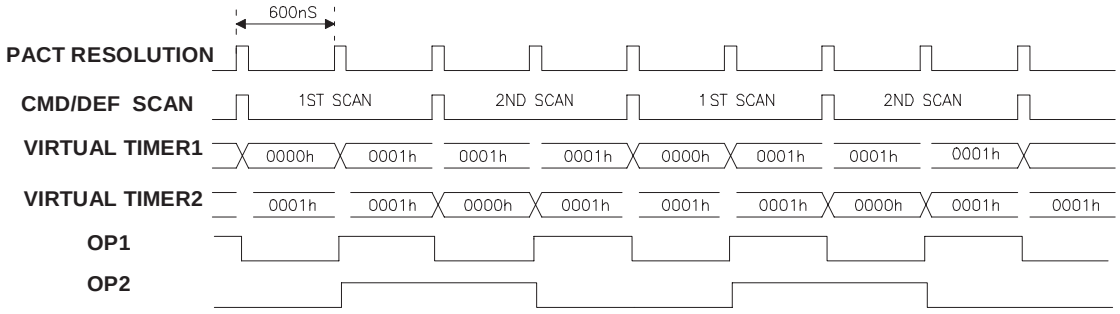

PETITIONER ECOBEE
EX. 1010

Using the PACT Step Node Routine

```
;*********************************************************
;       START END ADDRESS DEFINITION
;*********************************************************
STARTAD .EQU 01EFH
PACTPRI .EQU P04F     ; Global function control register
CDSTART .EQU P041     ; Command/definition area start register
CDEND   .EQU P042     ; Command/definition area end register
CPCTL3  .EQU P04C     ; Set Up CP control register 3
ENDAD   .EQU 01D0H
CPPRE   .EQU P04D     ; CP input control register
;*********************************************************
;       INIT PACT PERIPHERAL FRAME
;*********************************************************
DEBUT
    OR   #003H,PACTPRI                      ;DISABLE WATCHDOG, MODE A
    MOV  #(STARTAD-0100H-080H),CDSTART      ;START AD, CMD/DEF INT DIS
    MOV  #(ENDAD-0100H+04H),CDEND           ;END AD
    MOV  #012H,PACTSCR                      ;SYSCLK DIVIDED BY 3 =>
                                            ;RESOL=600ns AT 20MHz
;*********************************************************
;       MAIN PGM
;*********************************************************
MAIN
    OR  #020H,PACTSCR      ;ENABLE PACT CMD/DEF AREA
    JMP  $                 ;LOOP MAIN PGM
;*********************************************************
;       INIT PACT CMD/DEF AREA
;*********************************************************
    .sect "CMDEF",(ENDAD)    ;CMD/DEF SECTION PROGRAM

    .WORD  0804h,0000h       ;RST OP2 ON 0000H VIRT2
    .WORD  0824h,0000h       ;SET OP2 ON 0000H VIRT1
    .WORD  0A00h,0001h       ;SET OP1 ON 0001H,INV ON ZERO VIRT2
    .WORD  0A00h,0001h       ;SET OP1 ON 0001H,INV ON ZERO VIRT1
    .WORD  0004h,0000h       ;VIRT2 MAX VALUE = 0002H
    .WORD  0004h,0000h       ;VIRT1 MAX VALUE = 0002H
    .WORD  0001h,0000h       ;NEXT IS A DEF
    .WORD  0040h,0000h       ;STEP ENABLE
```


PETITIONER ECOBEE
EX. 1010

Programming The PACT SCI

Programming the PACT SCI is very simple. First, define a special SCI timer definition in the CMD/DEF area in order to set the appropriate baud rate for receive and/or transmit mode. In this example, we are using the same baud rate for receive and transmit.

PWM Application Requirements

- Transmission and reception of 055h at 9600 baud
- Txd and rxd are connected together

PACT Configuration

PACT RESOLUTION = 1µs => SYSCLK / 5

CMD/DEF CONFIG: 1 dummy next def , 1 sci timer def , 1 sdt cmp on op1

SCI TIMER MAX VALUE=**ERROR!**

=> for baud rate = 9600 with resolution = 1 µs the SCI timer max value = 24 (18h).

The standard compare cmd sets OP1 on ERROR! and reset on zero to show the timer activity.

BUFFER NOT USED (MIN), NO CAPTURE => MODE A => START ADDRESS = 01EFh

3 CMD/DEF => END ADDRESS = START ADDRESS - (4 x NB CMD/DEF) + 1 = 01E4h

PACT Command/Definition Initialization

CMD/DEF 1:DUMMY STANDARD COMPARE COMMAND ON DEFAULT TIMER (1 TS)

USE ONLY TO IDENTIFY NEXT COMMAND AS A TIMER DEFINITION

Reserved				EN	IR	RA	0	0	ST	CA	Pin Select			IC	NX	Timer Compare Value
0	0	0	0	0	0	0	0	0	0	0	0	0	0	0	1	0000h
D31.....D28				D27	D26	D25	D24	D23	D22	D21	D20..D18			D17	D16	D15.....D0

```
.WORD  00001H,00000H ;NEXT IS A TIMER DEFINITION
```

CMD/DEF 3: SCI BAUD RATE TIMER DEFINITION (2 TS)

MAX VALUE = 0018H , D19 = 0

Maximum Virtual Timer Value	RN	RX	TX	“1”	Virtual Timer value	0
00c	0	1	1	“1”	0000	“0”
D31.....D23 D22.....D20	D19	D18	D17	D16	D15.....D1	D0

```
.WORD  00c7h,0000h ;VIRT1 MAX VALUE = 000cH
```

CMD/DEF 4: STANDARD COMPARE COMMAND ON VIRTUAL TIMER (1 TS)

SET OP1 ON VIRTUAL TIMER VALUE = 000cH (24/2=12)

INVERTED ACTION (RESET OP1) ON ZERO VIRT

Reserved				EN	IR	RA	0	0	ST	CA	Pin Select			IC	NX	Timer Compare Value
0	0	0	0	1	0	1	0	0	0	1	0	0	0	0	0	000Ch
D31.....D28				D27	D26	D25	D24	D23	D22	D21	D20..D18			D17	D16	D15.....D0

```
.WORD  0A20h,000Ch ;SET OP1 ON 000CH VIRT,INV ACTION ON ZERO VIRT
```


PETITIONER ECOBEE
EX. 1010

Programming the PACT SCI Routine

```
;It is necessary to connect TXD and RXD together to perform this application.
        .TEXT 7000H
        .global deb
;*********************************************************
;       START END ADDRESS DEFINITION
;*********************************************************
STARTAD .EQU 01EFH
PACTPRI .EQU P04F     ; Global function control register
CDSTART .EQU P041     ; Command/definition area start register
CDEND   .EQU P042     ; Command/definition area end register
PACTSCR .EQU P040     ; Setup control register
ENDAD   .EQU 01E4H
SCICTLP .EQU P045     ; PACT/SCI control register
RXBUFP  .EQU P046    ; PACT/SCI RX data register
TXBUFP  .EQU P047    ; PACT/SCI TX data register
;*********************************************************
;       INIT PACT PERIPHERAL FRAME
;*********************************************************
DEBUT
;...
    OR   #003H,PACTPRI                      ;DISABLE WATCHDOG, MODE A
    MOV  #010H,B                            ;INIT STACK POINTER
    LDSP
    MOV  #(STARTAD-0100H-080H),CDSTART      ;START AD, CMD/DEF INT DIS
    MOV  #(ENDAD-0100H),CDEND               ;END AD
    MOV  #014H,PACTSCR                      ;SYSCLK DIVIDED BY 5 =>
                                            ;RESOL=1us AT 20MHz
    MOV  #00CH,SCICTLP                      ;ENABLE SCI RECEIVE AND TRANSMIT
                                            ;INT T
;...
;*********************************************************
;       MAIN PGM
;*********************************************************
MAIN
    OR  #020H,PACTSCR            ;ENABLE PACT CMD/DEF AREA
    EINT                         ;ENABLE INTERRUPT TO START SCI TRANSMISSION
                                 ;ON
```


PETITIONER ECOBEE
EX. 1010

```
    JMP  $                        ;LOOP MAIN PGM
;*************************************************************
;      INTERRUPT SCI TRANSIT
;*************************************************************
ITTXD
   MOV #055H,TXBUFP       ;LOAD DATA TRANSMIT = 055H IN TRANSMIT BUFFER
   RTI
;*************************************************************
;      INTERRUPT SCI RECEIVE
;*************************************************************
ITRXD
   MOV RXBUFP,A      ;READ SCI RECEIVE BUFFER
   CMP  #055H,A      ;TEST IF RECEPTION OK
   JNZ ERROR
    RTI
ERROR
    DINT             ;DISABLE INT TO STOP TRANSMISSION IN CASE OF ERROR.
    JMP  $
;*************************************************************
;       SCI INTERRUPT VECTOR
;*************************************************************
    .sect "VECTSC8I",07F9CH      ;SCI INTERRUPT VECTORS
    .WORD  ITTXD                 ;SCI TRANSMIT VECTOR
    .WORD  ITRXD                 ;SCI RECEIVE VECTOR
;*************************************************************
;       INIT PACT CMD/DEF AREA
;*************************************************************
    .sect "CMDEF",(ENDAD)    ;CMD/DEF SECTION PROGRAM

    .WORD  0A20h,000Ch       ;SET OP1 ON 000CH VIRT,INV ACTION ON ZERO VIRT
    .WORD  00C7h,0000h       ;VIRT1 MAX VALUE = 000cH
    .WORD  0001h,0000h       ;NEXT IS A DEF
```


PETITIONER ECOBEE
EX. 1010

Appendix

Figure 15. PACT Timing Diagram

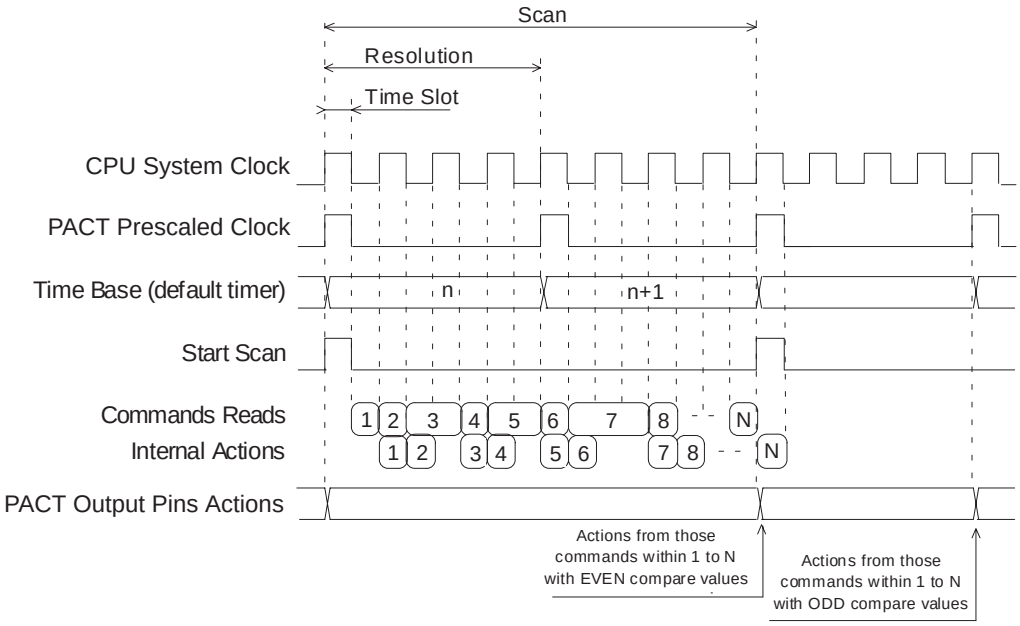

Figure 16. PACT Dual Port Ram Mapping

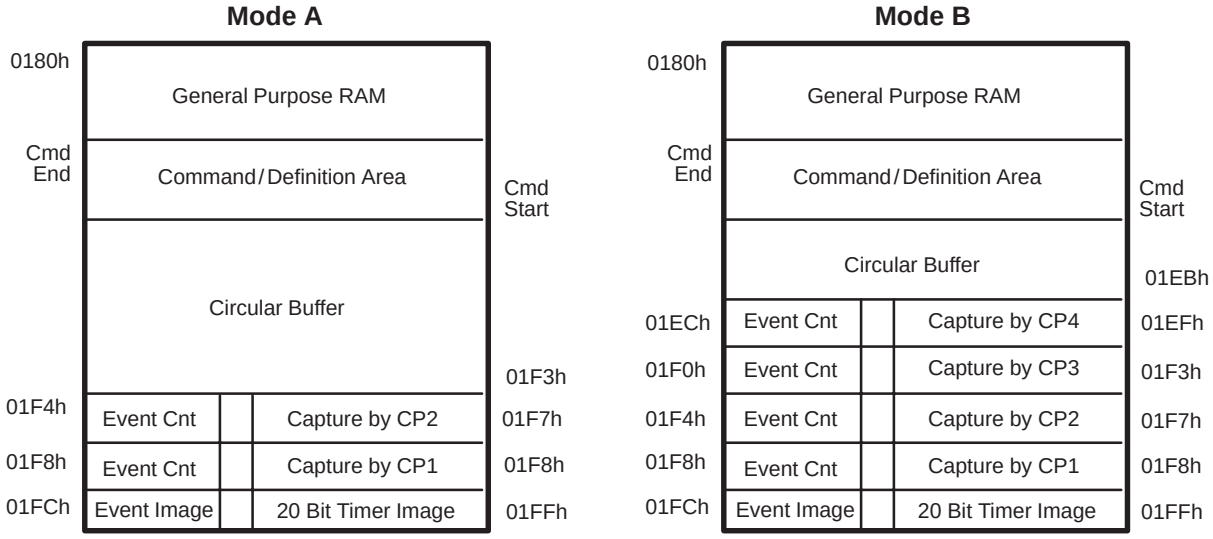

PETITIONER ECOBEE
EX. 1010

PACT Input Capture Structure

Figure 17. Organization of the Capture Registers and the Circular Buffer in Dual Port RAM

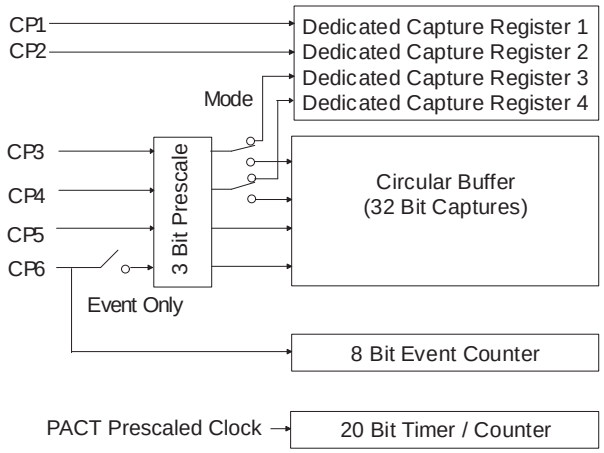

PETITIONER ECOBEE
EX. 1010

Command And Definition Area

Virtual Timer Definition

Maximum Virtual Timer Value		RN	EN	INT	“0”	Virtual Timer Value	“0”
D31.....D23	D22.....D20	D19	D18	D17	D16	D15.....D1	D0

Requires two time slots.

D0 **= 0**
01F3h D0 must be written as 0 to get a valid timer definition.

D1–15 **Virtual timer value**
Provides the most significant 15 bits of a 16-bit virtual timer. The LSB D0 is invisible at this location but available for any command acting on this timer.

D16 **= 0**
D16 must be written as 0 to get a valid timer definition.

D17 **Interrupt on 0** (INT)
Active = 1. Interrupt when the virtual timer (D1–15) is reset to zero or compare valid.

D18 **Enable bit** (EN)
Active = 1. Enables the timer update. Used to stop and start the timer.

D19 **Range bit** (RN)
used in conjunction with D20–22 to define the maximum value.

D20–22 **Define a further three bits of the maximum count for the virtual timer.**
Either D13, 14, or 15 of the virtual timer if the range bit = 1, or D1, 2, or 3 if the precision bit = 0. The undefined bits of the maximum count for the virtual timer are set to 1 if the range bit =1, or set to 0 if the range bit = 0.

D23–31 **Sets the radical of the maximum count of the virtual timer.**
Used with D20–22 to specify the maximum count of the virtual timer: when the virtual timer reaches the defined count, it will be cleared two prescaler clock cycle later.

Virtual Timer Timeout = (Maximum Value Defined + 2) x Resolution

Maximum Value Format with Range Bit D19 = 0

0	0	0	D31.....D23 = 9 Bit Radical	D22	D21	D20	0

Maximum Value Format with Range Bit D19 = 1

D22	D21	D20	D31.....D23 = 9 Bit Radical	1	1	1	0

PETITIONER ECOBEE
EX. 1010

SCI Baud Rate Timer Definition

Maximum Virtual Timer Value		RN	RX	TX	1	Virtual Timer value	0
D31.....D23	D22.....D20	D19	D18	D17	D16	D15.....D1	D0

Requires two time slots.

D0 **= 0** D0 must be written as 0 to get a valid timer definition

D1–15 **Baud rate timer**
Provides the most significant 15 bits of a 16-bit virtual timer used as the baud rate generator.

D16 **= 1**
D16 must be written as 1 to get a valid timer definition.

D17 **Transmit select** (TX)
Active = 1. Selects this timer definition to be used for the transmit baud rate generator.

D18 **Receive select** (RX)
Active = 1. Selects this timer definition to be used for the receive baud rate generator.

D19 **Range bit** (RN)
Used in conjunction with D20–22.

D20–22 **Define a further three bits of the maximum count of the virtual timer**.
Either D13, 14, or 15 of the virtual timer if the range bit = 1, or D1, 2, or 3 if the range bit = 0. The undefined bits of the maximum count for the virtual timer are set to 1 if range bit =1, or to set to 0 if the range bit = 0.

D23–31 **Sets the radical of the maximum count of the virtual timer.**
Used with D20–22 to specify the maximum count of the virtual timer - When the virtual timer reaches the defined count, it will be cleared two prescaler clock cycles later.

$$\text{Maximum Virtual Timer Value} = \frac{1}{4 \text{ x Baud Rate x Resolution}} - 2$$

Maximum Value Format with Range Bit D19 = 0

0	0	0	D31.....D23 = 9 Bit Radical	D22	D21	D20	0

Maximum Value Format with Range Bit D19 = 1

D22	D21	D20	D31.....D23 = 9 Bit Radical	1	1	1	0

PETITIONER ECOBEE
EX. 1010

Offset Timer Definition - Time From Last Event

Maximum Event Counter Value	IE	DC	VC	RD	HC	EN	IM	ST	Virtual Timer Offset Value	"1"
D31.....D24	D23	D22	D21	D20	D19	D18	D17	D16	D15.....D1	D0

Requires two time slots if bit D21 = 0. Requires three time slots if bit D21 = 1.

D0 **= 1**
D0 must be written as 1 to get a valid timer definition.

D1–15 **Virtual timer offset value**
Provides the most significant 15 bits of a 16-bit virtual timer offset. This timer can be automatically reset to zero on every event on pin CP6 if inhibit clear = 0 (see caution on this page).

D16 **Step** (ST)
Active = 1. Allows lower resolution on following commands .

D17 **Interrupt on maximum event** (IM)
Active = 1. Interrupt when event counter reaches the maximum value (D24–31)

D18 **Enable** (EN)
Active = 1. Enables the timer update. Used to stop and start the timer.

D19 **Inhibit clear** (HC)
Active = 1. When this bit is set, the virtual offset timer defined will not be reset to zero when an event (CP6) occurs. If this bit is cleared, the virtual offset timer will be automatically reset to zero on every event on CP6.

D20 **Reset default timer** (RD)
Active = 1. Clear default timer when event counter reaches the maximum value (D24–31).

D21 **Virtual capture** (VC)
Active = 1. Stores every CP6 event in the circular buffer of the 16-bit virtual offset timer (defined above) before clearing the virtual offset timer.

D22 **Default capture** (DC)
Active = 1. Captures 32-bit data in the circular buffer when the event counter reaches the maximum value (D24–31).

D23 **Interrupt on event** (IE)
Active =1. Sets the interrupt flag when an event occurs on pin CP6.

D24–31 **Event counter maximum value**
Specifies a maximum for the event counter. On reaching this value the event counter will be reset to zero by the next event on CP6.

CAUTION: If a virtual timer value (field D1.....D15) has to be loaded by the CPU, the timer must be stopped first with enable bit D18 = 0 and then restarted with D18 = 1. Trying to load a virtual timer value by the CPU while the timer is running may fail.

PETITIONER ECOBEE
EX. 1010

Standard Compare Command

Reserved	EN	IR	RA	”0”	”0”	ST	CA	Pin Select	IC	NX	Timer Compare Value
D31.....D28	D27	D26	D25	D24	D23	D22	D21	D20..D18	D17	D16	D15.....D0

Requires one time slot.

D0–15 **Timer compare value**
Provides a 16-bit timer compare value. This timer value is either the last virtual timer defined above this command in the command/definition area or, if no virtual timer has been defined, the default timer (reference timer).

D16 **Next command is a definition** (NX)
Active = 1. Indicates that the entry in the command/definition area is a definition.

D17 **Interrupt on compare** (IC)
Active = 1. Interrupt when the compare value (D0...D15) is matched by the reference timer.

D18–20 **Pin selection**
Selects the output pin that will be modified when the compare value is matched. The pin number is the binary value of the bits D31, D20, D19, or D18 plus 1.

D21 **Compare action** (CA)
Sets or resets the pin defined by pin selection/pin offset when the compare value is matched by the reference timer (set = 1, clear = 0).

D22 **Step** (ST)
Active = 1. Allows lower resolution on following commands.

D23–24 **= 0**
These bits must be written as 0 to get a valid command.

D25 **Reset action** (RA)
Sets or resets the selected output pin as defined by pin selection, when the reference timer is reset to zero.

1 = When the reference timer is zero, execute the opposite action.
0 = No action when the reference timer is zero.

D26 **Interrupt on reset** (IR)
Active = 1. Causes an interrupt when the reference timer is reset to zero.

D27 **Enable pin** (EN)
Active = 1. Enables output pin actions on this command.

D28–31 Reserved.

PETITIONER ECOBEE
EX. 1010

Conditional Compare Command

Event Counter Compare Value	"1"	SA	CA	Pin Select	IC	NX	Timer Compare Value
D31.....D24	D23	D22	D21	D20.....D18	D17	D16	D15.....D0

Requires one time slot.

D0–15 **Timer compare value**
Provides a 16-bit timer compare value. This timer value is compared to either the last virtual timer defined above this command in the command/definition area or, if no virtual timer has been defined, the default timer (reference timer). The value written by the user must be greater than 1.

D16 **Next command is a definition** (NX)
Active = 1. Indicates that the next entry in the command/definition area is a definition.

D17 **Interrupt on compare** (IC)
Active = 1. Interrupts when the timer compare value (D0–15) is matched by the reference timer value and the event compare value (D24–31) is matched by the event counter or (if D22 = 1) the event counter reaches the event compare value (D24–31) plus 1.

D18–20 **Pin selection**
Selects an output pin whose state is modified when the compare value is matched. The pin number is the binary value of D20–18 plus 1, except the binary value 111, which disables any pin action. Therefore, OP8 is not available for this command.

D21 **Compare action** (CA)
Sets or resets the pin defined by pin selection when both compare values are matched by the reference timer and the event counter. These actions occur with a delay of two resolutions (set = 1, clear = 0).

D22 **Same action** (SA)
Active = 1. Same action as compare action, when the event counter reaches the event compare value plus 1. This allows action on the next event if the timer and event never match.

If same action = 0, there will be no action on event compare plus one.

D23 **= 1**
D23 must be written as 1 to get a valid command

D24–31 **Event compare value**
Sets an 8-bit value which is compared with the 8-bit event counter. The actions selected by this command will occur under either of the following conditions:

- The event compare value matches the value of the event counter, and the timer compare value matches the reference timer value.
- The same action active bit is set, and the event counter matches the event compare value plus 1.

PETITIONER ECOBEE
EX. 1010

Double Event Compare Command

Reserved	2C	1C	2R	EP	I2	A2	"0"	"1"	ST	A1	Pin Select	I1	NX	Event 2 Comp. Value	Event 1 Comp. Value
D31	D30	D29	D28	D27	D26	D25	D24	D23	D22	D21	D20...D18	D17	D16	D15.....D8	D7.....D0

Requires one time slot.

D0–D7 **Event 1**
Sets an 8-bit value which, when matched by the 8-bit event counter, causes the action defined by D17, D21, and D29.

D8–15 **Event 2**
Sets an 8-bit value which, when matched by the 8-bit event counter, causes the associated action defined by D25, D26, D28 and D30.

D16 **Next command is a definition** (NX)
Active = 1. Indicates that the next entry in the command/definition area will be a definition.

D17 **Interrupt on compare 1** (I1)
Active = 1. Interrupt when the event 1 compare value is matched by the event counter.

D18–20 **Pin selection**
Selects the output pin where state will be modified when the compare value is matched. The pin number is the binary value of the bits D20 to 18 + 1 (20 = LSB, 18 = MSB)

D21 **Compare action 1** (A1)
Sets or resets the output pin defined by pin selection/pin offset when the event 1 compare value (D0–D7) is matched by the event counter. These actions occur with a delay of three resolutions (set = 1, clear = 0).

D22 **Step** (ST)
Active = 1 Allows lower resolution on the following commands:

D23 **= 0**
D23 must be written as 0 to get a valid command.

D24 **= 1**
D24 must be written as 1 to get a valid command.

D25 **Compare action 2** (A2)
No action = 0. Inverted action = 1. Sets or resets the pin defined by pin selection/pin offset when the event 2 compare value (D8–D15) is matched by the event counter.

D26 **Interrupt on compare 2** (I2)
Active = 1. Causes an interrupt when event 2 occurs.

D27 **Enable pin** (EP)
Active = 1. Enables output pin actions for this command.

D28 **Event 2 default timer reset** (2R)
Active = 1. Resets the default timer when event 2 occurs.

D29 **Event 1 default timer capture** (1C)
Active = 1. Stores 32-bit data in the circular buffer when event 1 occurs.

D30 **Event 2 default timer capture** (2C)
Active = 1. Stores 32-bit data in the circular buffer when event 2 occurs.

D31 Reserved.

PETITIONER ECOBEE
EX. 1010

PACT Control Registers

	Bit 7	Bit 6	Bit 5	Bit 4	Bit 3	Bit 2	Bit 1	Bit 0
PACTSCR P040	DEFTIM OVRFL INT ENA	DEFTIM OVRFL INT FLAG	CMD/DEF AREA ENA	FAST MODE SELECT	PACT PRESCALE SELECT3	PACT PRESCALE SELECT2	PACT PRESCALE SELECT1	PACT PRESCALE SELECT0
CDSTART P041	CMD/DEF AREA INT ENA	-	CMD/DEF AREA START BIT 5	CMD/DEF AREA START BIT 4	CMD/DEF AREA START BIT 3	CMD/DEF AREA START BIT 2	-	-
CDEND P042	-	CMD/DEF AREA END BIT 6	CMD/DEF AREA END BIT 5	CMD/DEF AREA END BIT 4	CMD/DEF AREA END BIT 3	CMD/DEF AREA END BIT 2	-	-
BUFPTR P043	1	1	BUFFER POINTER BIT 5	BUFFER POINTER BIT 4	BUFFER POINTER BIT 3	BUFFER POINTER BIT 2	BUFFER POINTER BIT 1	-
SCICTLP P045	PACT SCI RXRDY	PACT SCI TXRDY	PACT SCI PARITY	PACT SCI FE	PACT SCI RX INT ENA	PACT SCI TX INT ENA	-	PACT SCI SW RESET
RXBUFP P046	PACT SCI RXDT7	PACT SCI RXDT6	PACT SCI RXDT5	PACT SCI RXDT4	PACT SCI RXDT3	PACT SCI RXDT2	PACT SCI RXDT1	PACT SCI RXDT0
TXBUFP P047	PACT SCI TXDT7	PACT SCI TXDT6	PACT SCI TXDT5	PACT SCI TXDT4	PACT SCI TXDT3	PACT SCI TXDT2	PACT SCI TXDT1	PACT SCI TXDT0
OPSTATE P048	PACT OP8 STATE	PACT OP7 STATE	PACT OP6 STATE	PACT OP5 STATE	PACT OP4 STATE	PACT OP3 STATE	PACT OP2 STATE	PACT OP1 STATE
CDFLAGS P049	CMD/DEF INT 7 FLAG	CMD/DEF INT 6 FLAG	CMD/DEF INT 5 FLAG	CMD/DEF INT 4 FLAG	CMD/DEF INT 3 FLAG	CMD/DEF INT 2 FLAG	CMD/DEF INT 1 FLAG	CMD/DEF INT 0 FLAG
CPCTL1 P04A	CP2 INT ENA	CP2 INT FLAG	CP2 CAPT RISING EDGE	CP2 CAPT FALLING EDGE	CP1 INT ENA	CP1 INT FLAG	CP1 CAPT RISING EDGE	CP1 CAPT FALLING EDGE
CPCTL2 P04B	CP4 INT ENA	CP4 INT FLAG	CP4 CAPT RISING EDGE	CP4 CAPT FALLING EDGE	CP3 INT ENA	CP3 INT FLAG	CP3 CAPT RISING EDGE	CP3 CAPT FALLING EDGE
CPCTL3 P04C	CP6 INT ENA	CP6 INT FLAG	CP6 CAPT RISING EDGE	CP6 CAPT FALLING EDGE	CP5 INT ENA	CP5 INT FLAG	CP5 CAPT RISING EDGE	CP5 CAPT FALLING EDGE
CPPRE P04D	BUFFER HALF/ FULL INT ENA	BUFFER HALF/ FULL INT FLAG	INPUT CAPT PRESCALE SELECT 3	INPUT CAPT PRESCALE SELECT 2	INPUT CAPT PRESCALE SELECT 1	CP6 EVENT ONLY	EVENT COUNTER SW RESET	OP/ SET/CLR SELECT
WDRST P04E	PACT WD KEY BIT 7	PACT WD KEY BIT 7	PACT WD KEY BIT 7	PACT WD KEY BIT 7	PACT WD KEY BIT 7	PACT WD KEY BIT 7	PACT WD KEY BIT 7	PACT WD KEY BIT 7
PACTPRI P04F	PACT STEST	PACT SUSPEND	PACT GROUP 1 PRIORITY	PACT GROUP 2 PRIORITY	PACT GROUP 3 PRIORITY	PACT MODE SELECT	PACT WD PRESCALE SELECT 1	PACT WD PRESCALE SELECT 0

PETITIONER ECOBEE
EX. 1010

Interrupt Vector Sources

MODULE	VECTOR ADDRESS	INTERRUPT SOURCE	INTERRUPT FLAG	SYSTEM INTERRUPT	PRIORITY IN GROUP
PACT (Group 1)	7FB0h,7FB1h	PACT Circular Buffer	BUFF INT FLAG	BUFINT	1
	7FB2h,7FB3h	PACT CP6 Edge	CP6 INT FLAG	CP6INT	2
	7FB4h,7FB5h	PACT CP5 Edge	CP5 INT FLAG	CP5INT	3
	7FB6h,7FB7h	PACT CP4 Edge	CP4 INT FLAG	CP4INT	4
	7FB8h,7FB9h	PACT CP3 Edge	CP3 INT FLAG	CP3INT	5
	7FBAh,7FBBh	PACT CP2 Edge	CP2 INT FLAG	CP2INT	6
	7FBCh,7FBDh	PACT CP1 Edge	CP1 INT FLAG	CP1INT	7
	7FBEh,7FBFh	Default Timer Overflow	DEFTIM OVRFL INT FLAG	POVRFL INT	8
PACT (Group 2)	7F9Ch,7F9Dh	PACT SCI TX INT	PACT TX RDY	PTXINT	2
	7F9Eh,7F9Fh	PACT SCI RX INT	PACT RXRDY	PRXINT	1
PACT (Group 3)	7FA0h,7FA1h	PACT CMD/DEF Entry 0	CMD/DEF INT 0 FLAG	CDINT 0	1
	7FA2h,7FA3h	PACT CMD/DEF Entry 1	CMD/DEF INT 1 FLAG	CDINT 1	2
	7FA4h,7FA5h	PACT CMD/DEF Entry 2	CMD/DEF INT 2 FLAG	CDINT 2	3
	7FA6h,7FA7h	PACT CMD/DEF Entry 3	CMD/DEF INT 3 FLAG	CDINT 3	4
	7FA8h,7FA9h	PACT CMD/DEF Entry 4	CMD/DEF INT 4 FLAG	CDINT 4	5
	7FAAh,7FABh	PACT CMD/DEF Entry 5	CMD/DEF INT 5 FLAG	CDINT 5	6
	7FACh,7FADh	PACT CMD/DEF Entry 6	CMD/DEF INT 6 FLAG	CDINT 6	7
	7FAEh,7FAFh	PACT CMD/DEF Entry 7	CMD/DEF INT 7 FLAG 7	CDINT 7	8

PETITIONER ECOBEE
EX. 1010

Part III
Module Specific Application Design Aids

Part III contains six sections:

RESET Operations 99

SPI and SCI Modules 105

Timer and Watchdog Modules 199

Analog to Digital Modules 309

PACT Module 375

I/O Pins 439

PETITIONER ECOBEE
EX. 1010

PETITIONER ECOBEE
EX. 1010

Proper Termination of Unused I/O Pins

Michael S. Stewart
Microcontroller Products — Semiconductor Group
Texas Instruments

PETITIONER ECOBEE
EX. 1010

PETITIONER ECOBEE
EX. 1010

Introduction

Occasionally, embedded microcontroller systems applications do not require the use of all the I/O pins available on the chosen microcontroller. In this case, the design engineer must properly terminate all unused I/O pins to ensure proper device operation. The main area of concern regarding proper pin termination is power consumption in low-power modes (standby or halt). However, proper termination techniques should be followed for applications that do not use low-power modes.

When a CMOS microcontroller enters a low-power mode, the internal nodes connected to the external pins need to be biased in the logical high (V_{IH}) or logical low (V_{IL}) condition. When the internal nodes are biased identically, there is little to no internal stray power consumption. An obvious solution to this requirement is to configure the unused bidirectional I/O pins as outputs driving either a high (V_{OH}) or low (V_{OL}) value. In this situation, no external circuitry is necessary.

However, if the external pins are not bidirectional but input only, they must be pulled high or low externally. If any input pin is not externally biased but allowed to float, the internal nodes connected to this pin circuitry will then be self-biased to either a logical high or low state. In this condition, current paths will be generated allowing unwanted power consumption. This condition is normally called the 'floating nodes' problem, and the symptom that is most commonly seen when the device does not have any unused input pins connected to V_{CC} or V_{SS} is that the low-power current will initially fall to the specified range but will slowly climb into the multiple mA range. This condition is not destructive, but in a battery operated system that is assuming a halt mode current drain of 30 µA or less, a multiple mA current consumption could discharge the battery much sooner than expected.

NOTE:

When terminating unused I/O pins, good layout practices must be implemented to reduce EMI emissions. Loop areas must be kept to a minimum. Any components used for terminations must be kept as close to the device as possible.

What to Do: Best Solution

The TMS370 family of microcontrollers have various types of pins. Some are input only some are general-purpose bidirectional, and others are multiplexed module function and I/O pins. Without going into a great degree of detail, the best overall solution for terminating unused I/O pins (bidirectional) is to individually pull each pin low through a resistor (typically 10 kΩ or greater) as shown in Figure 1.

PETITIONER ECOBEE
EX. 1010

Figure 1. Best Solution for Terminating Unused I/O Pins: Pull Low Through a Resistor

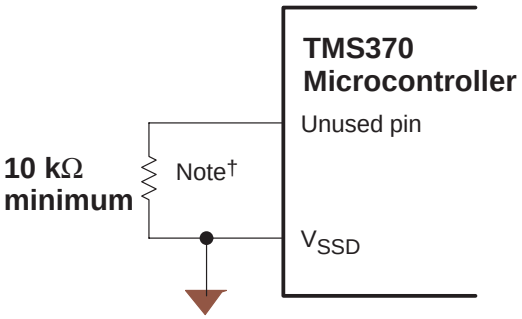

Note†: To reduce EMI emissions, keep the loop area as small as possible.

NOTE:

The above solution is the best recommendation for unused I/O pins. Alternative solutions are presented in later sections, however, potential problems outlined for each alternative solution outweigh the potential cost savings of using one resistor.

Another system application that will generate the need to terminate an unused pin will be when an external clock signal is driven in on the XTAL2/CLKIN pin. The associated XTAL1 pin should be connected as illustrated in Figure 2.

PETITIONER ECOBEE
EX. 1010

Figure 2. Recommended Termination for the XTAL1 Pin When Used in the Externally Driven Clock Mode.

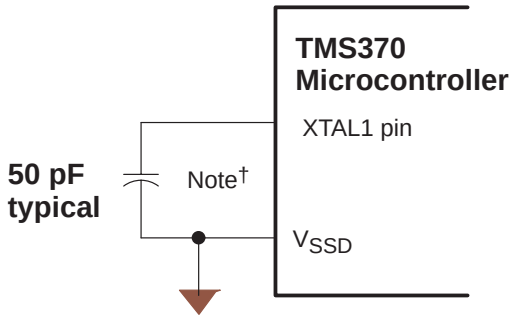

Note†: To reduce EMI emissions, keep the loop area as small as possible.

What to Do: Alternative Solutions

Alternative solutions exist for terminating unused I/O pins. These consist of the following:

- Initialize bidirectional pins as output high (V_{OH}) or output low (V_{OL}).
- Tie all unused pins to ground via a common resistor.

One alternative solution is to initialize all unused bidirectional I/O pins as outputs. This option is not available for input only pins. The main advantage of this solution is the zero added system cost. This solution is ideal for applications that do not use low-power mode. It can be a problem, however, when microcontrollers are subjected to harsh environments that contain violent electrical noise spikes. V_{CC} and V_{SS} swings can cause the program counter of the microcontroller to be corrupted. For example, if this condition occurs, pin initialization can be altered and code can be executed to cause the device to enter a low-power mode. This can cause pins that were initialized as outputs to be changed to inputs, and the device could enter a low-power mode. If the pins do not have any external biasing circuitry attached, a ‘floating-node’ condition could be created.

PETITIONER ECOBEE
EX. 1010

Figure 3. Alternate Solution for Terminating Unused I/O pins: Open Circuit.

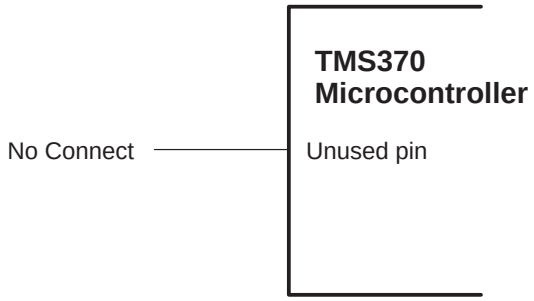

Another solution is to initialize all unused input and bidirectional I/O pins as inputs and tie all these pins low via one external resistor (10 kΩ or greater). The main advantage of this solution is its minimal additional system cost. As long as all unused pins are initialized as inputs, this solution is acceptable. Disadvantages of this solution are similar to those described on the previous page. External electrical conditions could corrupt the program counter to cause I/O pins to change their initialization. For example if two I/O pins were tied together and pulled low via a common resistor (see Figure 4), inappropriate software execution could alter these pins. If one pin was altered to be an output high (V_{OH}) and the other was altered to be an output low (V_{OL}), a rather serious drive conflict could occur. Another consideration would be EMC issues of routing multiple PC traces from potentially different areas of the device.

PETITIONER ECOBEE
EX. 1010

Figure 4. Alternate Solution for Terminating Unused I/O Pins: Shared Pull-Down Resistor.

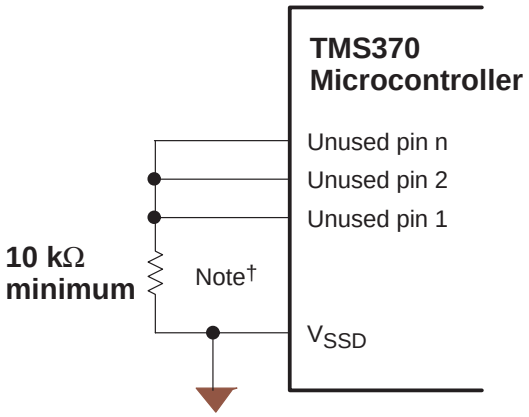

Note†: To reduce EMI emissions, keep the loop area as small as possible.

Summary

The best overall solution for terminating unused I/O pins (input only or bidirectional) is to tie each unused pin individually low through a resistor. This situation is acceptable for any condition the pin can be initialized in. If the pin is initialized as an input, only leakage current can occur. If the pin is initialized as an output low, then the current depends on the voltage drop from the V_{OL} level and V_{SS} across the external resistor. If the pin is initialized as an output high, the current depends on the voltage drop from the V_{OH} level and V_{SS} across the external resistor. The larger the resistor value used, the less the current drain.

One additional suggestion is to continually reinitialize your configuration values in any main routine loop you implement. Also, when changing the value of an output from an output high to low (or low to high), reinitialize the direction control for the bit.

PETITIONER ECOBEE
EX. 1010

PETITIONER ECOBEE
EX. 1010

Part IV
EEPROM Programming

Part IV contains two sections:

EEPROM Self Programming 449

Bootstrap Programs 457

PETITIONER ECOBEE
EX. 1010

PETITIONER ECOBEE
EX. 1010

EEPROM Self Programming With the TMS370

Microcontroller Products—Semiconductor Group
Texas Instruments

PETITIONER ECOBEE
EX. 1010

PETITIONER ECOBEE
EX. 1010

Programming With the TMS370 Family

The following example demonstrates the self-programming ability of the TMS370 family. This feature can program any byte of the onboard data EEPROM by passing the appropriate data and address to this routine.

The program consists of two major sections: the procedure that determines the bits that need to be changed (PROGRAM), and the procedure that changes these bits (EEPROG).

- PROGRAM attempts to save programming time by checking which portions of the two-step programming procedure must occur. If the data already in the array is the same as the new data, then no programming is necessary. By omitting a write ones or a write zeros operation, 10 ms is removed from the total 20-ms programming time; every programming step that this routine omits saves 10 ms.

  The address and data to program are passed to this routine in the register pair ADDR1–1:ADDR1 and in register A, respectively.

- EEPROG is the routine that initiates, times, and then stops the actual EEPROM programming. During this section of code, disable the interrupts to prevent data corruption. Corruption can occur when an interrupt routine accesses any EEPROM location, interrupting the EEPROG routine between writing to the EEPROM location and setting the EXE bit (DEECTL.0).

You can program unprotected data EEPROM using only the V_{CC} power supply. Enter the write protection override (WPO) mode by placing 12 V on the MC pin when programming protected data EEPROM.

The following program is used to write to any location in the data EEPROM.

Parameters used:

ADDR1–1:ADDR1 = EEPROM address to program
A = data to write to EEPROM address

Write Data EEPROM Routine

```
TEMP1    .EQU  R3              ;General-purpose temporary register
TEMP2    .EQU  R4              ;General-purpose temporary register
ADDR1    .EQU  R6              ;Contains address for program
                               ;operation.
ECOM     .EQU  R7              ;Command for DEECTL
DEECTL   .EQU  P01A            ;Address for data EEPROM control reg.
;
```

PROGRAM Routine

```
PROGRAM  MOV   A,TEMP2         ;Save data.
         MOV   @ADDR1,A        ;Read current data.
         XOR   TEMP2,A         ;Different bits = 1
         JZ    EXITW           ;If byte is already equal then exit.
         INV   A               ;Different bits = 0
         OR    TEMP2,A         ;Bits that change from 1 to 0 = 0
         BTJZ  #0FFh,A,WRITE0  ;Program 0s if any 0s
         JMP   ONES            ;If all 1s then go to WRITE1 part.
WRITE0   MOV   #1,ECOM         ;Program to write 0s (DEECTL = 1).
         MOV   TEMP2,A
         CALL  EEPROG          ;Programming EEPROM
ONES     MOV   @ADDR1,A        ;Get the current data.
         XOR   TEMP2,A         ;Bits that change = 1
         AND   TEMP2,A         ;Bits that change from 0 to 1 = 1
```


PETITIONER ECOBEE
EX. 1010

```
        JZ    LASTCHK         ;Are there any 1s to program?
WRITE1  MOV   #3,ECOM         ;DEECTL value=3 (program 1s)
        MOV   TEMP2,A
        CALL  EEPROG          ;Program 0s
                              ;Verify the programming operation.
LASTCHK MOV   @ADDR1,A        ;Check new memory against wanted
                              ;memory.
        CMP   TEMP2,A         ;If equal then exit.
        JEQ   EXITW
;
;       Error–handling routine here
;
EXITW   RTS
;
```

EEPROG Routine

```
EEPROG  DINT                  ;Disable interrupts.
        MOV   A,@ADDR1        ;Move data to address.
        MOV   ECOM,DEECTL     ;Load DEECTL register.
        EINT                  ;Enable interrupts.
        MOVW  #2778,TEMP1     ;Wait 10 ms for EEPROM write
                              ;(at 5 MHz).
WAIT10  INCW  #–1,TEMP1
        JC    WAIT10
        MOV   #0,DEECTL       ;Clear EXE bit.
        RTS                   ;Exit from internal RAM program.
```

The following portion of code is the same as the PROGRAM routine above but provides actual values for each step. The values shown are the low nibble of a byte expressed in binary; these values are shown because they provide all possible bit combinations.

In this example, the memory address contains x1100, and x1010 is programmed to that address. Before calling the EEPROG routine, the program writes new data to the EEPROM address located in register ADDR1–1:ADDR1 and then passes data to register A that specifies either a write ones or a write zeros operation. The program provides actual values at each step.

PROGRAM Routine

```
                                  A        @(ADDR1–1:ADDR1)

                            ;  x1010    x1100
PROGRAM  MOV   A,TEMP2      ;                     Save data.
         MOV   *ADDR1,A     ;  x1100              Read current data.
         XOR   TEMP2,A      ;  x0110              Different bits = 1
         JZ    EXITW        ;                     If byte is already equal then
                                                  exit.
         INV   A            ;  x1001              Different bits = 0
         OR    TEMP2,A      ;  x1011              Bits that change from 1 to 0 =
                                                  0
         BTJZ  #0FFH,A,WRITE0 ;                   Program 0s if any 0s.
         JMP   ONES         ;                     If all 1s then go to WRITE1
                                                  part.
WRITE0   MOV   #1,ECOM      ;                     Program to write 0s (DEECTL =
                                                  1).
         MOV   TEMP2,A      ;  x1010
         CALL  EEPROG       ;           x1000     Programming EEPROM.
ONES     MOV   *ADDR1,A     ;  x1000              Get the current data.
         XOR   TEMP2,A      ;  x0010              Bits that change = 1.
         AND   TEMP2,A      ;  x0010              Bits that change from 0
                            ;                     to 1 = 1.
         JZ    LASTCHK      ;                     Are there any 1s to
                            ;                     program?
```


PETITIONER ECOBEE
EX. 1010

```
WRITE1   MOV   #3,ECOM         ;                      DEECTL value=3 (program 1s)
         MOV   TEMP2,A         ;  x1010
         CALL  EEPROG          ;           x1010      Program 0s.
                               ;                      Verify the programming
                               ;                      operation.
LASTCHK  MOV   *ADDR1,A        ;  x1010               Check new memory against
                               ;                      wanted memory.
         CMP   TEMP2,A         ;                      If equal then exit.
         JEQ   EXITW           ;
;
;        Error-handling routine here
;
EXITW    RTS
```


PETITIONER ECOBEE
EX. 1010

PETITIONER ECOBEE
EX. 1010

Part IV
EEPROM Programming

Part IV contains two sections:

EEPROM Self Programming 449

Bootstrap Programs 457

PETITIONER ECOBEE
EX. 1010

PETITIONER ECOBEE
EX. 1010

Bootstrap Program for the TMS370

Microcontroller Products—Semiconductor Group
Texas Instruments

PETITIONER ECOBEE
EX. 1010

PETITIONER ECOBEE
EX. 1010

Bootstrap Program

This is a bootstrap program for TMS370. This program is resident in master. It is transmitted to slave mode in RAM memory. After transmission, the control is passed on to the beginning of this program in slave mode at 20h. This programs data EEPROM. It checks the first word for the EEPROM command and the number of bytes to be programmed. The second and third bytes indicate the destination address. If the first byte in the command word (the first word) is zero, it indicates the end of EEPROM programming.

Routine

```
;
;Define the registers
;
SPICCR    .EQU   P030      ;SPI communications control register
SPICTL    .EQU   P031      ;SPI control register
SPIBUF    .EQU   P037      ;SPI receive data buffer register
SPIDAT    .EQU   P039      ;SPI serial data register
SPIPC1    .EQU   P03D      ;SPI port control register 1
SPIPC2    .EQU   P03E      ;SPI port control register 2
SPIPRI    .EQU   P03F      ;SPI priority
DEECTL    .EQU   P01A      ;EEPROM control register
BEGIN     .EQU   20H       ;RAM program starting address
DATAL     .EQU   R04       ;Data length
TEMP      .EQU   R07       ;Temporary register
TEMP1     .EQU   R14       ;Temporary register 1
TEMP2     .EQU   R12       ;Temporary register 2
;
;program
;
          .TEXT  7300H
          MOV    #0A0H,B             ;Initialize stack
          LDSP
LAST      MOV    #0FFH,SPICCR        ;Initialize SPI.
          MOV    #047H,SPICCR        ;Program SPI for 8 bit data.
          MOV    #03,SPICTL          ;Program SPI for slave and enable inter.
          MOV    #02,SPIPC1          ;Enable SPICLk pin.
          MOV    #020H,SPIPC2        ;Enable SPISIMO and SPISOMI pin.
START1X   CLR    B                   ;Reset the index
LOOPX     BTJZ   #40H,SPICTL,LOOPX   ;Check if character received.
          MOV    SPIBUF,A            ;Read command word.
AGAIN     MOV    A,*DATAL(B)         ;Save in register for further processing
          INC    B                   ;Increment till two byte address is read
          CMP    #3,B                ;Check if three bytes are read.
          JNE    LOOPX               ;If not, read again.
;
          MOV    DATAL,TEMP          ;Copy command value in temporary reg.
          AND    #3FH,TEMP           ;Obtain No. of bytes of data/prog.
          CLR    B                   ;Set offset for data EEPROM
          BTJO   #40H,DATAL+1,LOOP1X ;Check addr. whether data or prog. EEPRO
          MOV    #2,B                ;Offset for data EEPROM.
;
LOOP1X    BTJZ   #40H,SPICTL,LOOP1X  ;Check if character received.
          MOV    SPIBUF,A            ;Read received character.
          DINT
          MOV    A,TEMP2             ;Save it in to TEMP2.
          MOV    A,*DATAL+2          ;Move data to the array location.
          MOV    #1,A                ;Program DEECTL=1 (program 0s).
          CALLR  PROG                ;Do the write operation.
```


PETITIONER ECOBEE
EX. 1010

```
          DINT
          MOV    #3,A                ;Program DEECTL=0 (program 1s).
          CALLR  PROG                ;Do the write operation.
          CALLR  LASTCHK             ;Check the programmed byte with desired.
          INCW   #1,DATAL+2          ;Go to next location.
          DJNZ   TEMP,LOOP1X         ;Do until all bytes done.
LOOP2X    BTJZ   #40H,SPICTL,LOOP2X  ;Check if character received.
          MOV    SPIBUF,A            ;Read received character.
          JNZ    $1                  ;If not zero, go again.
          JMP    EXIT                ;Go to end.
$1        CLR    B                   ;Clear index.
          JMP    AGAIN               ;Get more data.
;
;PROGRAM TO WRITE 0s AND 1s TO DATA OR PROGRAM EEPROM
;
PROG      MOV    A,*EECTL(B)         ;Load DEECTL.
          EINT
          MOVW   #2778,TEMP1         ;Wait for 10 ms for EEPROM write.
WAIT10    INCW   #-1,TEMP1
          JC     WAIT10
          CLR    A                   ;Reset execution bit in DEECTL.
          MOV    A,*EECTL(B)         ;
EXITPROG  RTS
;
;ROUTINE TO COMPARE THE CONTENT OF PROGRAMMED BYTE WITH DESIRED VALUE
;
LASTCHK   MOV    *DATAL+2,A          ;Load the EEPROM content.
          CMP    TEMP2,A             ;Compare with desired value.
          JNE    ERROR               ;If not same go to error routine.
          RTS                        ;Go back to calling routine.
;
;PUT YOUR ERROR ROUTINE HERE
;
ERROR     RTS
EXIT      .END                       ;END
```


PETITIONER ECOBEE
EX. 1010

Bootstrap Program for the SPI in Slave Mode

Microcontroller Products—Semiconductor Group
Texas Instruments

PETITIONER ECOBEE
EX. 1010

PETITIONER ECOBEE
EX. 1010

Bootstrap Program for the SPI in Slave Mode

This program executes on a serial peripheral interface (SPI) operating in the slave mode. The SPI is first initialized by the INIT routine (see code below), then control transfers to the main program at 7000h. When the SPI interrupt occurs, it sets the number of bootstrap-program bytes into register B, then loads in the program starting at address 0020h, checking the SPI INT FLAG (bit 6 of the SPICTL register) to know when each byte is received. When all bytes are loaded, execution transfers to the beginning of the bootstrap program at address 0020h. It is assumed that the SPI interrupt is not used by the application in slave; however, if used, you can use any other unused interrupt to invoke bootstrapping. The INIT routine and the bootstrap load program (BOOTS) require 36 bytes of memory.

Routine

```
;
;Define the registers
;
SPICCR    .EQU      P030             ; SPI communications control register
SPICTL    .EQU      P031             ; SPI control register
SPIBUF    .EQU      P037             ; SPI receive data buffer register
SPIDAT    .EQU      P039             ; SPI serial data register
SPIPC1    .EQU      P03D             ; SPI port control register 1
SPIPC2    .EQU      P03E             ; SPI port control register 2
SPIPRI    .EQU      P03F             ; SPI priority
DEECTL    .EQU      P01A             ; Data EEPROM control register
;
;
;
;Program the SPI in Slave Mode
;
          .TEXT     7F9CH
INIT      MOV       #0F7H,SPICCR     ; Initialize SPI.
          MOV       #047H,SPICCR     ; Program SPI for 8-bit data.
          MOV       #03,SPICTL       ; Program SPI for slave and enable inter
          MOV       #02,SPIPC1       ; Enable SPICLK function pin.
          MOV       #020H,SPIPC2     ; Enable SPISIMO function pin.
          EINT                       ; Enable interrupts.
          BR        7000H            ; Start executing main program at 7000H.
;
;
;
;Actual bootstrap program mapped into SPI interrupt routine
;
BOOTS     MOV       #0E0H,B          ; Load the number of program bytes.
LOOP      BTJZ      #40H,SPICTL,LOOP ; Check if character received.
SPIRD     MOV       SPIBUF,A         ; Read received character(command word).
          MOV       A,*20H–1[B]      ; Save the program starting at M.A. 020h
          DJNZ      B,LOOP           ; Continue until program is transferred.
          BR        20H              ; Go to program just loaded into RAM.
;
          .SECT     ”VECTORS”,7FFEH  ; Load the INIT program beginning
          .WORD     INIT             ; at the address in the RESET vector.
;
          .SECT     ”BOOT”,7FF6H     ; Load the bootstrap program beginning
          .WORD     BOOTS            ; at the address in SPI Interrupt vector
```


PETITIONER ECOBEE
EX. 1010

PETITIONER ECOBEE
EX. 1010

Bootstrap Program for the TMS370 in Master

Microcontroller Products—Semiconductor Group
Texas Instruments

PETITIONER ECOBEE
EX. 1010

PETITIONER ECOBEE
EX. 1010

Introduction

This program is a master program and is resident in master MCU. It transmits another program from master to slave MCU. It is mainly for programming data EEPROMs in slave mode. It is assumed that the slave MCU has a bootstrap program for receiving the data from the SPI.

Routine

```
;
;Define the registers
;
SPICCR    .EQUP030      ;SPI communications control register
SPICTL    .EQUP031      ;SPI control register
SPIBUF    .EQUP037      ;SPI receive data buffer register
SPIDAT    .EQUP039      ;SPI serial data register
SPIPC1    .EQUP03D      ;SPI port control register 1
SPIPC2    .EQUP03E      ;SPI port control register 2
SPIPRI    .EQUP03F      ;SPI priority
EECTL     .EQU101AH     ;EEPROM control register
LAST      .EQU7300H     ;RAM program BEGIN ADDR.
INDEX     .EQUR05       ;Index register
TEMP1     .EQUR06       ;Temporary register
TEMP2     .EQUR07       ;Temporary register
TEMP3     .EQUR18       ;Temporary register
REALST    .EQUR10       ;R09:R10 has the address of data in master.
STRT      .EQUR12       ;R11:R12 has the address of data in slave to be
                        ;programmed.
LENGTH    .EQUR14       ;R13:R14 has the length of data to be programmed.
MAX       .EQUR15       ;R15 has the maximum No. of bytes that can be
                        ;transmitted.
COMMAND   .EQUR16       ;R16 has the command word.
MASK      .EQU80H       ;Mask for EEPROM programming condition
;
;Program to transmit program
;Remember that the last byte of program has to be sent first. The last byte
;sent must be first byte of program. In the beginning, dummy bits may have to
;be sent, depending on the program length.
;
          .TEXT  7000H
          MOV    #0A0H,B             ;Initialize the stack.
          LDSP
START     MOV    #0FFH,SPICCR        ;Initialize SPI.
          MOV    #07FH,SPICCR        ;Program SPI for 8-bit data.
          MOV    #07,SPICTL          ;Program SPI for master and enable int.
          MOV    #02,SPIPC1          ;Enable SPICLk pin.
          MOV    #030H,SPIPC2        ;enable SPISIMO and SPISOMI pin.
          MOV    #0E0H,B             ;Maximum No. of bytes to be transferred.
START0    MOV    *LAST-1[B],A        ;Start transmitting from last byte.
          MOV    A,SPIDAT            ;Put the byte to be transmitted in
                                     ;buffer.
LOOP1     BTJZ   #40H,SPICTL,LOOP1   ;Check if transmitted.
          MOV    SPIBUF,A            ;Read to clear interrupt flag.
          DJNZ   B,START0            ;Continue until complete
;
;Program to transmit data
;First, set up the digital I/O reg. to set up for expanded microcomputer
;mode.
          MOV    #0FFH,P021          ;Set up port A for data bus.
          MOV    #0FFH,P025          ;Set up port B for low address bus.
          MOV    #0FFH,P029          ;Set up port C for high address bus.
          MOV    #0,P02C             ;Set up port D for function A
          MOV    #0FFH,P02D          ;in expansion mode.
;
```


PETITIONER ECOBEE
EX. 1010

```
;Initialize the registers for program EEPROM programming.
;
          MOVW   #7000H,REALST       ;Load beginning of real data to be
                                     ;transmitted.
          MOVW   #7000H,STRT         ;Starting address of data in slave.
          MOVW   #0400H,LENGTH       ;Length of data.
          CALL   MAINPROG            ;Go to main program.
;
;Initialize registers for data EEPROM programming.
;
          MOVW   #2000H,REALST       ;Load beginning of real data to be
                                     ;transmitted.
          MOVW   #1F00H,STRT         ;Starting address of data in slave.
          MOVW   #0FFH,LENGTH        ;Length of data.
          CALL   MAINPROG            ;Go to main program.
          JMP    RESET
;End of main program
;
;Subroutine MAINPROG
;
MAINPROG  MOV    #3FH,MAX            ;Maximum No. of bytes.
          MOVW   LENGTH,R01          ;Load length in A:B.
          DIV    MAX,A               ;Divide total # of bytes with maximum
                                     ;No. of bytes in a packet.
          MOV    B,TEMP2             ;Save remainder.
          MOV    A,TEMP1             ;Save quotient.
          JZ     NEXT                ;If less than 3F bytes go to PROG2.
          CALL   PROG1               ;Program to send bytes in packets of 3F.
NEXT      CALL   PROG2               ;Program to send bytes < 3F.
          RTS                        ;Return to calling program.
;
;Program to reset flag in slave
;
RESET     CLR    A                   ;A=0 for eeprogramming completion.
          MOV    A,SPIDAT            ;Transmit it
LOOP10    BTJZ   #40H,SPICTL,LOOP10  ;Wait until transmitted.
          MOV    SPIBUF,A            ;Read to clear interrupt flag.
          JMP    EXIT                ;Return to main program.
;
;Subroutine PROG1 creates a command word and transmit the bytes in the
;packets of 3F hex.
;
PROG1     CLR    INDEX               ;Initialize index
PROG11    MOV    MAX,COMMAND         ;Load maximum number of bytes.
          CALL   TRANSMIT            ;Go to transmit prog.
          CLR    B                   ;Initialize index.
START1    CALL   SPISE               ;Transmit 3F bytes.
          CMP    #03FH,B             ;Check if max. no. of bytes.
          JNE    START1              ;If not, go again.
          INCW   #3FH,STRT           ;Increment address of first byte in next
                                     ;packet.
          INC    INDEX               ;Increment index.
          CMP    INDEX,TEMP1         ;All packets of  3F bytes transmitted?
          JNE    PROG11              ;If not go again.
          RTS                        ;Return to main program.
;
;Subroutine WAIT20 is a delay timer for 20ns.
;
WAIT20    MOVW   #5556,TEMP3         ;Wait for 20 ms for EEPROM to write 0s
WAIT      INCW   #-1,TEMP3           ;& write 1s in slave.
          JC     WAIT
          RTS
;
```


PETITIONER ECOBEE
EX. 1010

```
;Subroutine PROG2 creates a command word and transmits the bytes when total
;number of bytes in a packet is less than 3F hex.
;
PROG2     MOV    TEMP2,COMMAND       ;Load number of bytes to be transmitted.
          CALL   TRANSMIT            ;Go to transmit program.
          CLR    B                   ;Initialize index.
START2    CALL   SPISE               ;Transmit all bytes.
          CMP    TEMP2,B             ;Check if maximum number of bytes.
          JNE    START2              ;If not, go again.
          RTS                        ;Return to main program.
;
;Subroutine TRANSMIT transmits command word and the destination address
;to slave.
;
TRANSMIT  OR     #MASK,COMMAND       ;Load proper mask bits to make a command
          MOV    COMMAND,A           ;Get command word.
          MOV    A,SPIDAT            ;Transmit it.
LOOP4     BTJZ   #40H,SPICTL,LOOP4   ;Wait till transmitted.
          MOV    SPIBUF,A            ;Read to clear interrupt flag.
          MOV    STRT–1,A            ;Load high byte of destination address.
          MOV    A,SPIDAT            ;Transmit it.
LOOP5     BTJZ   #40H,SPICTL,LOOP5   ;Wait intil transmitted.
          MOV    SPIBUF,A            ;Read to clear interrupt flag.
          MOV    STRT,A              ;Load low byte of destination address.
          MOV    A,SPIDAT            ;Transmit it.
LOOP6     BTJZ   #40H,SPICTL,LOOP6   ;Wait until transmitted.
          MOV    SPIBUF,A            ;Read to clear interrupt flag.
          RTS
;
;Subroutine SPISE sends actual data to slave SPI.
;
SPISE     MOV    *
REALST,A            ;Get byte to be transmitted.
          INC    B                   ;Increment index.
          INCW   #1,REALST           ;Increment pointer
          MOV    A,SPIDAT            ;Put the byte to be transmitted in
                                     ;buffer.
LOOP2     BTJZ   #40H,SPICTL,LOOP2   ;Check if transmitted.
          MOV    SPIBUF,A            ;Read to clear interrupt flag.
          CALL   WAIT20              ;Wait 20 ms for EEPROM write.
          CALL   WAIT20              ;Wait 20 ms for EEPROM write.
          RTS
EXIT      NOP
          .END
```


PETITIONER ECOBEE
EX. 1010

PETITIONER ECOBEE
EX. 1010

Part V
External Memory Expansion Examples

PETITIONER ECOBEE
EX. 1010

PETITIONER ECOBEE
EX. 1010

Using Memory Expansion in Microcomputer Mode With Internal Memory Disabled

Microcontroller Products—Semiconductor Group
Texas Instruments

PETITIONER ECOBEE
EX. 1010

PETITIONER ECOBEE
EX. 1010

Introduction

This report describes special features of the digital I/O port control registers (address range 1020h to 102Fh), not fully documented in the *TMS370 Family User's Guide*.

These features should be taken into account when memory expansion is used in microcomputer mode to prevent any uncontrolled effect.

Special Features

In microcomputer mode, with bus expansion (function A or B) and internal program memory disabled, the internal program memory locations and 1020h to 102Fh are decoded as external addresses.

Memory accesses to the locations 1020h to 102Fh have following effect:

- Writes are executed externally as expected, but also internally (not expected). In other words, the internal I/O configuration register using the same address is also modified. This may corrupt the port pins initially set as alternate function A or B, if port control registers (XPORT2 and/or DPORT1) have changed. It may also affect those port pins which were originally configured as general purpose I/Os.
- Reads are only performed from the external data bus as expected.

To prevent corrupting the bus expansion mode:

- The addresses of XPORT2 and DPORT1 should not be used as external.
- Addresses used to control general purpose I/Os should not be used as external addresses.
- Use of read-modify instructions at 102Xh locations is not available since it would read external data and write or modify the internal I/O configuration registers located at the same addresses.

The table below summarizes read and write functions at the locations 1020h to 102Fh in all the operating modes.

Table 1. Read and Write Functions

	Microcomputer Mode	**Microprocessor Mode**
Internal Memory Enabled	Internal Write & Read	Internal Write & Read (Internal Write has no effect on I/O's)
Internal Memory Disabled	External Write & Read Internal Write (Internal write may affect I/O's)	External Write & Read Internal Write (Internal write has no effect on I/O's)

PETITIONER ECOBEE
EX. 1010

PETITIONER ECOBEE
EX. 1010

Interfacing and Accessing External Memory

Microcontroller Products—Semiconductor Group
Texas Instruments

PETITIONER ECOBEE
EX. 1010

PETITIONER ECOBEE
EX. 1010

Microcomputer Interface Example

The following exercise is one method of interfacing the TMS370 family with common memory. The goals of this example include the following:

- Interfacing with the maximum amount of memory
- Using the least expensive logic elements
- Using a minimum amount of parts
- Maintaining sufficient system speed

The example shown in Figure 1 illustrates a balance of these goals. In this case, the TMS370C050 is used with the following:

- Three TMS27C256s, each providing 32K bytes of EPROM (ROM1, ROM2, and ROM3 at U2 to U4) for a total of 96K bytes
- Two HM626LP-15s, each providing 8K bytes of RAM (RAM1 and RAM2 at U6 and U7) for a total of 16K bytes
- A peripheral device (U5) needing up to 64 bytes of memory address space that interfaces to the memory-select process

This uses a total memory of 116K bytes: 112K bytes of external memory and 4K bytes of memory internal to the microcomputer. The current timings for the EPROM and RAM memory devices are given. Since specifications change from time to time, always check the latest data sheets for the devices used.

PETITIONER ECOBEE
EX. 1010

Figure 1. Microcomputer Interface Example

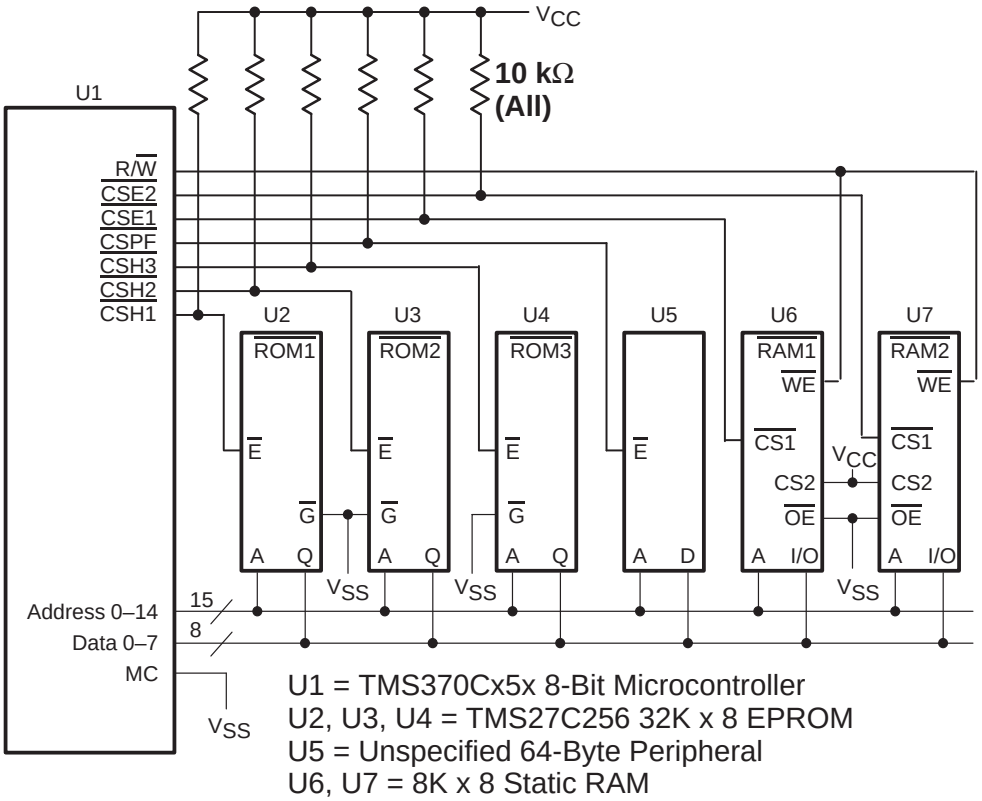

The devices used in the TMS370 interface example circuit are:

TMS370C050: 8-bit CMOS microcontroller
TMS27C256: 32K x 8 EPROM
HM626LP: Hitachi 8K x 8 RAM

Table 1. Timing Specifications for the TMS27C256-25 EEPROM Devices

Symbol	Description	Min	Max
$t_{a(A)}$	Access time from address	—	250 ns
$t_{a(E)}$	Access time from enable	—	250 ns
t_{dis}	Output disable time	0 ns	60 ns
$t_{v(A)}$	Output data valid after address change	0 ns	—

Reference: 1993 TI *MOS Memory Data Book*

PETITIONER ECOBEE
EX. 1010

Table 2. Timing Specifications for the HM6264P-15 RAM Device

Symbol	Description	Min	Max
t_{AA}	Address access time	—	150 ns
t_{OHZ}	Out disable to output in high Z	0	
t_{C01}	Chip selection to output	—	150 ns
t_{HZ1}	Chip deselection to output in high Z	0 ns	50 ns
t_{CW}	Chip select to end of write	100 ns	—
t_{WP}	Write pulse width	90 ns	—
t_{DW}	Data to write time overlap	60 ns	—
t_{DH}	Data hold from write time	0 ns	—

Reference: *#M10 Hitachi Memory Data Book*

The TMS370 family is designed to use a SYSCLK speed of 5 MHz, so slower peripheral devices may not be able to react quickly enough to operate properly. The TMS370 family of devices has the ability to insert wait states to slow the memory accesses in three different ways.

- Use the AUTOWAIT DISABLE bit at SCCR1.4 to add one wait state to all external accesses.
- Use the PF AUTOWAIT bit at SCCR0.5 to add two wait states to the external peripheral file access.
- Allow the external device to pull the $\overline{\text{WAIT}}$ pin low and add as many wait states as required.

Table 3 shows the various combinations.

Table 3. Wait-State Control Bits

Wait-State Control Bits		Number of Clock Cycles per Access	
PF AUTOWAIT	AUTOWAIT DISABLE	Peripheral File	External Memory
0	0	3	3
0	1	2	2
1	0	4	3
1	1	4	2

The following subsections discuss the signal timings that must be considered for interfacing the TMS370 with external memory. With each system design, there are usually trade-offs due to speed and/or budget constraints. The timings given in Table 4 reflect worst-case specifications, and typical values have been avoided where possible.

PETITIONER ECOBEE
EX. 1010

Table 4. Memory Interface Timing

Symbol	Description	Min	Max	Unit
t_c†	CLKOUT (system clock) cycle time	200	2000	ns
$t_{w(COL)}$	CLKOUT low pulse duration	0.5 t_c – 25	0.5 t_c	ns
$t_{w(COH)}$	CLKOUT high pulse duration	0.5 t_c	0.5t_c + 20	ns
$t_{d(COL–A)}$	Delay time, CLKOUT low to address R/$\overline{W}$, and $\overline{OCF}$ valid		0.25t_c + 75	ns
$t_{v(A)}$	Address valid to $\overline{EDS}$, $\overline{CSE1}$, $\overline{CSE2}$, $\overline{CSH1}$, $\overline{CSH2}$, $\overline{CSH3}$, and $\overline{CSPF}$ low	0.5 t_c – 90		ns
$t_{su(D)}$	Write data set-up time to $\overline{EDS}$ high	0.75 t_c – 80‡		ns
$t_{h(EH–A)}$	Address, R/$\overline{W}$, and $\overline{OCF}$ hold time from $\overline{EDS}$, $\overline{CSE1}$, $\overline{CSE2}$, $\overline{CSH1}$, $\overline{CSH2}$, $\overline{SH3}$, and $\overline{CSPF}$ high	0.5 t_c – 60		ns
$t_{h(Eh–D)W}$	Write data hold time from $\overline{EDS}$ high	0.75 t_c + 15		ns
$t_{d(DZ–EL)}$	Delay time, data bus high impedance to $\overline{EDS}$ low (read cycle)	0.25 t_c – 35		ns
$t_{d(EH–D)}$	Delay time, $\overline{EDS}$ high to data bus enable (read cycle)	1.25 t_c – 40		ns
$t_{d(EL–DV)}$	Delay time, $\overline{EDS}$ low to read data valid		t_c – 95‡	ns
$t_{h(EH–D)R}$	Read data hold time from $\overline{EDS}$ high	0		ns
$t_{su(WT–COH)}$	$\overline{WAIT}$ set-up time to CLKOUT high	0.25 t_c + 70§		ns
$t_{h(COH–WT)}$	$\overline{WAIT}$ hold time from CLKOUT high	0		ns
$t_{d(ED–WTV)}$	Delay time, $\overline{EDS}$ low to $\overline{WAIT}$ valid		0.5 t_c – 60	ns
t_w	Pulse duration, $\overline{EDS}$, $\overline{CSE1}$, $\overline{CSE2}$, $\overline{CSH1}$, $\overline{CSH2}$, $\overline{CSH3}$, and $\overline{CSPF}$ low	t_c – 80‡	t_c + 40‡	ns
$t_{d(AV–DV)R}$	Delay time, address valid to read data valid		1.5 t_c – 115‡	ns
$t_{d(AV–WTV)}$	Delay time, address valid to $\overline{WAIT}$ valid		t_c – 115	ns
$t_{d(AV–EH)}$	Delay time, address valid to $\overline{EDS}$ high (end of write)	1.5 t_c – 85‡		ns

† t_c = system clock cycle time = 4/CLKIN.
‡ If wait states, PFWait, or the autowait feature is used, add t_c to this value for each wait state invoked.
§ If the autowait feature is enabled, the $\overline{WAIT}$ input may assume a “don’t care” condition until the third cycle of the access. The $\overline{WAIT}$ signal must be synchronized with the high pulse of the CLKOUT signal while still conforming to the minimum set-up time.

Read Cycle Timing

Interfacing the TMS370 with external memory devices requires a minimum amount of address-to-data access time, depending on the CPU clock speed and the number of wait states used. If the requirements are not met, incorrect data may be read. The requirements in this section are based on a 20-MHz clock frequency.

Valid Address-to-Data Read Time Requirement

The external device must meet the basic read cycle requirement: the valid address to data read time. This is the period from the instant the TMS370 outputs a valid address until the TMS370 requires data on the data memory pins. You can vary this requirement by using wait states to delay the moment the TMS370 reads data.

PETITIONER ECOBEE
EX. 1010

Figure 2. Valid Address-to-Data Read Timing

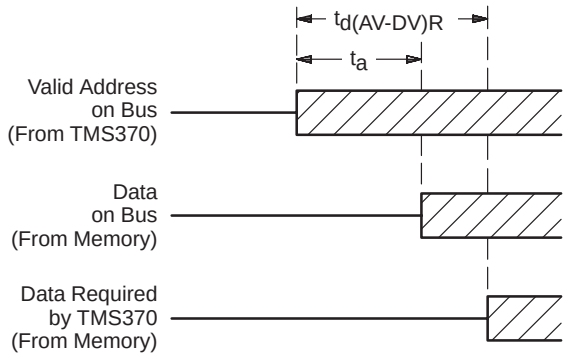

Table 5. Address-to-Data Timing Specifications

Symbol	Description	Formula	Time
$t_{d(AV–DV)R}$	TMS370 (0 wait) requires data	1.5 t_c – 115	185 ns (too fast)
$t_{d(AV–DV)R}$	TMS370 (1 wait) requires data	2.5 t_c – 115	385 ns (ok)
$t_{d(AV–DV)R}$	TMS370 (PF wait) requires data	3.5 t_c – 115	585 ns (ok)
$t_{a(A)}$	TMS27C256-25 provides data		250 ns (ok)
t_{AA}	HM6264-15 provides data		150 ns (ok)

As indicated above, the EPROM (TMS27C256) cannot provide the data quickly enough when the TMS370 device runs at full speed (zero wait states). Therefore, the TMS370 device should use the autowait feature (SCCR1.4) to add a wait state (one clock cycle) to the timing in order to slow the bus accesses. The wait state extends the access time (data required by TMS370) to 385 ns; then, the EPROM is ready with the data. The autowait feature makes it possible to use the TMS370 in low-cost applications with cheaper, slower memory devices.

The HM6264-15 RAM can extend the TMS370's minimum address-to-data set-up time with no wait states. When you access external RAM comparable to that of the Hitachi device, you can turn off the autowait feature to speed up the system.

A peripheral device can have up to 585 ns to respond to the TMS370 if the peripheral frame (PF) wait states are enabled. If the extra wait states are not needed, the TMS370 treats the peripheral device like other memory.

Chip-Select Low-to-Data Read Requirements

This parameter states the amount of delay from the time the chip-select signal goes low to the time the TMS370 expects valid data on the bus. The chip-select signal ($\overline{CSxx}$ or $\overline{EDS}$) must be used with external memory to validate the memory cycle. Connecting the chip-select pin ($\overline{CSxx}$) of the TMS370 to the EPROM's enable pin ($\overline{E}$) enables the EPROM to enter the low-power standby mode when not providing data. This significantly lowers the power requirements for the system because only one EPROM operates in the full-power operation mode at any one time. The HM6264 also enters a low-power standby mode whenever the $\overline{CS1}$ pin is pulled high.

PETITIONER ECOBEE
EX. 1010

Figure 3. Chip-Select Low-to-Data Read Timing

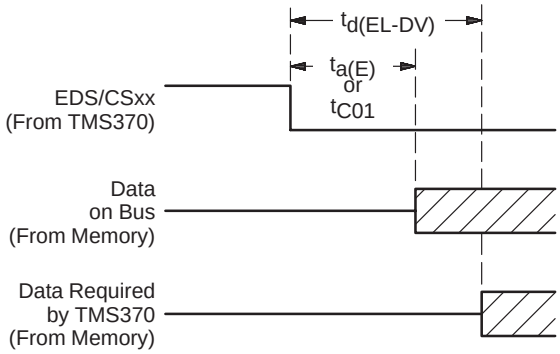

Table 6. Chip-Select Low-to-Data Read Timing Specifications

Name	Description	Formula	Time
$t_{d(EL–DV)}$	TMS370 (0 wait) requires data	t_c – 95	105 ns (too fast)
$t_{d(EL–DV)}$	TMS370 (1 wait) requires data	2 t_c – 95	305 ns (ok)
$t_{d(EL–DV)}$	TMS370 (pf wait) requires data	3 t_c – 95	505 ns (ok)
$t_{a(E)}$	TMS27C256-25 provides data		250 ns (ok)
t_{C01}	HM6264-15 provides data		150 ns (ok)

Chip-Select High-to-Next Data Bus Drive Requirements

The TMS370 and the memory device should not drive the memory at the same time. This can lead to increased stress and noise spiking on the V_{CC} and V_{SS} lines and reduce the reliability of the device. Memory devices often continue to drive the memory for a short time after the chip-select signal goes high. This normally doesn't present a problem unless the chip-select signal is delayed by interface circuitry and the data is not delayed. If the chip-select high transition is delayed long enough (and the data is not), the TMS370 will initiate a write cycle while the memory is still providing data.

Figure 4. Chip-Select High-to-Next Data Bus Drive Timing

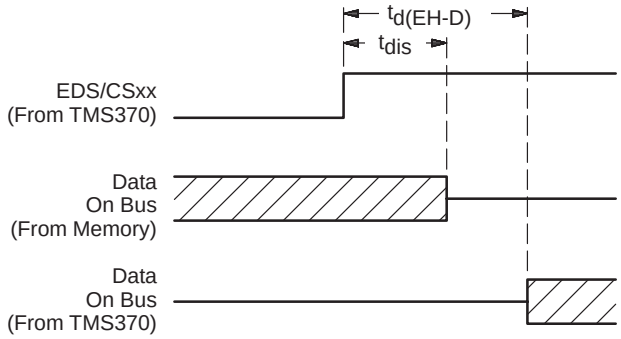

PETITIONER ECOBEE
EX. 1010

Table 7. Chip-Select High-to-Next Data Bus Drive Timing Specifications

Name	Description	Formula	Time
$t_{d(EH–D)}$	TMS370 (all) drives memory	$1.2\ 5t_c – 40$	210 ns
t_{dis}	TMS27C256-25 releases memory		60 ns
t_{OHZ}	HM6264-15 releases memory		50 ns

Read Data Hold After Chip Select High Requirements

The high transition of the chip-select signal ($\overline{CHxx}$) indicates the end of a data transfer (in this case, a read) cycle. The memory device must provide data up to this point, or incorrect data may be read. Most memories will continue to hold (or drive) the data memory for a short time after they are deselected, although the data may or may not be valid. After that period, the memories put their data outputs into the high-impedance state.

Figure 5. Read Data Hold After Chip-Select High Timing

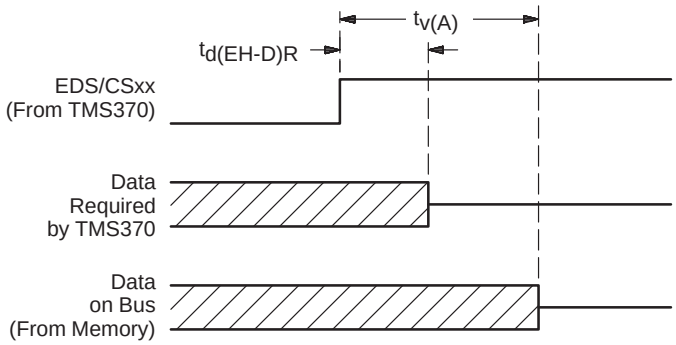

Table 8. Read Data Hold After Chip-Select High Timing Specifications

Name	Description	Formula	Time
$t_{d(EH–D)R}$	TMS370 (all) needs data	—	0 ns
$t_{V(A)}$	TMS27C256-25 data	—	0 ns
$t_{HZ}1$	HM6264-15 holds data	—	0 ns

PETITIONER ECOBEE
EX. 1010

Write Cycle Timing

The write cycle timing is defined primarily by the characteristics of the RAM interfacing with the TMS370. The Hitachi HM6264 used in this example offers two types of write cycles. This application uses a write cycle in which the output enable pin ($\overline{OE}$) is always fixed low. With the $\overline{CS2}$ pin tied to V_{CC}, the $\overline{CS1}$ and R/$\overline{W}$ signals determine the read and write cycle boundaries. You can use a separate address decoder instead of the chip-select functions, but you must use the $\overline{EDS}$ to validate the memory cycle. The $\overline{EDS}$ signal has the same timing as the chip-select signals. Figure 6 shows the write cycle parameters that must be met; they are discussed in the paragraphs that follow.

Table 9. Write Cycle Timing Specifications

Name	Description	Formula	Time
t_W	TMS370 (no wait) pulse width provided	t_c – 80	120 ns
t_W	TMS370 (PF wait) pulse width provided	3 t_c – 80	520 ns
t_{CW}	HM6264-15 pulse width required		100 ns

Write Data Set-Up Time Requirements

The write data set-up time is the period the RAM needs to receive data before the chip select signal goes high (inactive).

Table 10. Write Data Set-Up Timing Specifications

Name	Description	Formula	Time
$t_{SU(D)}$	TMS370 (no wait) provides data	0.75 t_c–80	70 ns
$t_{SU(D)}$	TMS370 (PF wait) provides data	2.75 t_c–80	470 ns
t_{DW}	HM6264-15 requires data		60 ns

Figure 6. Write Data Set-Up Timing

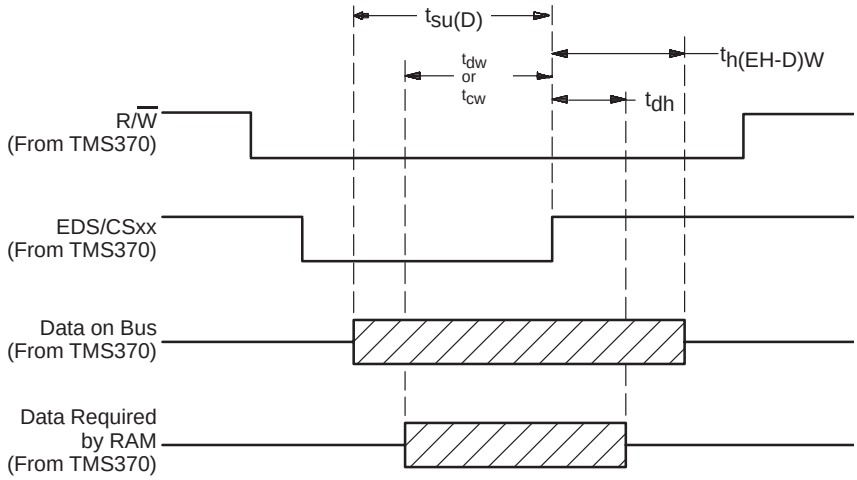

In the interface example, the TMS370 satisfies the HM6264-15 RAM's set-up requirement, even with no wait state. However, in a system design with added memory transceivers, set-up timing becomes more important.

PETITIONER ECOBEE
EX. 1010

Data Hold After Chip-Select High

The TMS370 must hold valid data on the bus until the RAM no longer needs it; otherwise, incorrect data may be written into the RAM. Most RAMs do not need data present on the pins following the chip-select's high transition. The TMS370 generally holds data much longer than required by most RAMs.

Figure 7. Write Data Hold After Chip-Select High

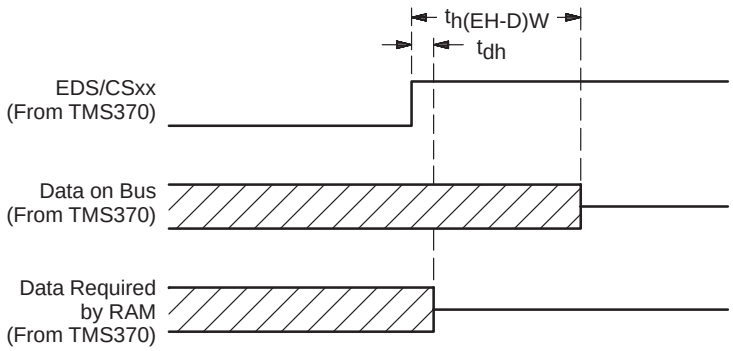

Table 11. Write Data Hold After Chip-Select High

Name	Description	Formula	Time
$t_{h(EH–D)W}$	TMS370 (all) provides data	0.75 t_c+15	165 ns
t_{DH}	HM6264-15 requires data		0 ns

Design Options

The interface example illustrated in Figure 1 on page 482 shows a compromise of system speed and cost. This section suggests ways to establish design goals that will optimize your system performance.

Lower Cost

If system cost is important, use slower memories that are less expensive. The slowest TMS27C256-25 EPROM has an access time of 250 ns.

- Access time from address to valid data (@ 5 MHz, t_c = 200)

TMS370 (1 wait) requires data	$t_{D(AV-DV)R}$	2.5 t_c – 115	385 ns
TMS27C256-25 provides data	$t_{A(A)}$		250 ns (ok)

- Access time from enable low to valid data (@ 5 MHz, t_c=200)

TMS370 (1 wait) requires	$t_{d(EL–DV)}$	2 t_c – 95	305 ns
TMS27C256-25 provides data	$t_{A(E)}$	$\overline{E}$ pin	250 ns(ok)
TMS27C256-25 provides data	$t_{EN(\overline{G})}$	$\overline{G}$ pin	100 ns(ok)

Faster Speed

If the main objective is system speed, then you should use the slowest EPROM that will work with the TMS370 running without wait states. The TMS370 at 5 MHz SYSCLK has a read access time requirement of 185 ns. Therefore, use the TMS27C256-17 EPROM that provides data in 170 ns.

As in the low-cost suggestions above, the EPROM's $\overline{E}$ pin is not fast enough to use the chip-select strobe; use the EPROM's $\overline{G}$ pin instead. To get a low-power standby mode with the EPROMs, use general-purpose

PETITIONER ECOBEE
EX. 1010

output lines from the TMS370 to the EPROM's $\overline{E}$ pin. The pins should be software enabled before the EPROM's program is entered.

- Access time from address to valid data:

TMS370 (no wait) requires data	$t_{D(AV–DV)R}$	1.5 t_c – 115	185 ns
TMS27C256-17 provides data	$t_{A(A)}$		170 ns (ok)

- Access time from enable low to valid data:

TMS370 (no wait) requires	$t_{D(\overline{E}L–DV)}$	t_c – 95	105 ns
TMS27C256-17 provides data	$t_{A(\overline{E})}$	$\overline{E}$ pin	170 ns (not ok)
TMS27C256-17 provides data	$t_{EN(\overline{G})}$	$\overline{G}$ pin	75 ns (ok)

Bank Switching Examples

The programs in this section show how memory bank switching can be used by the circuit in Figure 1 (page 482). Memory bank switching allows two or more memory devices to share the same addresses. The programmable chip-select signals ($\overline{CSHx}$, $\overline{CSEx}$, and $\overline{CSPF}$) enable the memory devices or banks one at a time during a read or write cycle. Figure 8 and Table 12 define the registers and their addresses used in these examples.

In the interface example in Figure 1 (page 482), the three EPROM devices ($\overline{ROM1}$ – $\overline{ROM3}$) each use addresses 8000h though FFFFh. Only one EPROM device (or bank), selected by $\overline{CSH1}$, $\overline{CSH2}$, or $\overline{CSH3}$, can be allowed to read data at a single time. The two RAM devices are each mapped at addresses 2000h through 3FFFh. The write and read cycles affect one RAM device at a time, as determined by the chip-select signals $\overline{CSE1}$ and $\overline{CSE2}$. The $\overline{CSPF}$ signal controls the peripheral memory device, which, in our example, is unspecified but defined to contain 64 bytes of memory. This device is mapped at addresses 10C0h through 10FFh.

To use external memory, devices with memory expansion must be configured for the microcomputer mode so that the chip-select signals are available. The external memory devices must have 3-state outputs because these devices share the data bus.

PETITIONER ECOBEE
EX. 1010

Figure 8. Peripheral File Frame 2: Digital Port Control Registers

Designation	ADDR	PF	Bit 7	Bit 6	Bit 5	Bit 4	Bit 3	Bit 2	Bit 1	Bit 0
APORT1	1020h	P020	Reserved							
APORT2	1021h	P021	Port A Control Register 2							
ADATA	1022h	P022	Port A Data							
ADIR	1023h	P023	Port A Direction							
BPORT1	1024h	P024	Reserved							
BPORT2	1025h	P025	Port B Control Register 2							
BDATA	1026h	P026	Port B Data							
BDIR	1027h	P027	Port B Direction							
CPORT1	1028h	P028	Reserved							
CPORT2	1029h	P029	Port C Control Register 2							
CDATA	102Ah	P02A	Port C Data							
CDIR	102Bh	P02B	Port C Direction							
DPORT1	102Ch	P02C	Port D Control Register 1							
DPORT2	102Dh	P02D	Port D Control Register 2							
DDATA	102Eh	P02E	Port D Data							
DDIR	102Fh	P02F	Port D Direction							

Equates for Examples

The following equates apply to the code examples herein:

```
SCCR0      .EQU      P010      ; System control & config. register 0
SCCR1      .EQU      P011      ; System Control & config. register 1
APORT2     .EQU      P021      ; Port A control register 2
BPORT2     .EQU      P025      ; Port B control register 2
CPORT2     .EQU      P029      ; Port C control register 2
CDATA      .EQU      P02A      ; Port C data register
CDIR       .EQU      P02B      ; Port C direction register
DPORT1     .EQU      P02C      ; Port D control register 1
DPORT2     .EQU      P02D      ; Port D control register 2
DDATA      .EQU      P02E      ; Port D data register
DDIR       .EQU      P02F      ; Port D direction register
```


PETITIONER ECOBEE
EX. 1010

Table 12. Port Configuration Registers Set-Up

Port#	Pin	MC Pin Low When $\overline{\text{RESET}}$ Goes High				MC Pin High When $\overline{\text{RESET}}$ Goes High
		General-Purpose I/O Use†		Microcomputer Mode†		
		DPORT1 =0 xPORT2 = 0 xDATA = Data In xDIR = 0 = Input	DPORT1 =0 xPORT2 = 0 xDATA = Data Out xDIR = 1 =Output	DPORT1 =0 xPORT2 = 1 xDATA (not used) xDIR (not used)	DPORT1 =1 xPORT2 = 1 xDATA (not used) xDIR (not used)	Micro-processor Mode
		Data In Mode	Data Out Mode	Function A	Function B	Function B
A	0–7	Data In = y	Data Out = q	DATA BUS	DATA BUS	DATA BUS
B	0–7	Data In = y	Data Out = q	LOW ADDR	LOW ADDR	LOW ADDR
C	0–7	Data In = y	Data Out = q	HI ADDR	HI ADDR	HI ADDR
D	0	Data In = y	Data Out = q	$\overline{\text{CSE2}}$	$\overline{\text{OCF}}$	$\overline{\text{OCF}}$
D	1	Data In = y	Data Out = q	$\overline{\text{CSH3}}$	§	¶
D	2	Data In = y	Data Out = q	$\overline{\text{CSH2}}$	§	¶
D	3	Data In = y	Data Out = q	CLKOUT	CLKOUT	CLKOUT
D	4	Data In = y	Data Out = q	R/$\overline{\text{W}}$	R/$\overline{\text{W}}$	R/$\overline{\text{W}}$
D	5	Data In = y	Data Out = q	$\overline{\text{CSPF}}$	§	¶
D	6	Data In = y	Data Out = q	$\overline{\text{CSH1}}$	$\overline{\text{EDS}}$	$\overline{\text{EDS}}$
D	7	Data In = y	Data Out = q	$\overline{\text{CSE1}}$	$\overline{\text{WAIT}}$	$\overline{\text{WAIT}}$
G	0–7	Data In = y	Data Out = q	§	§	¶
H	0	Data In = y	Data Out = q	§	§	¶

† Registers DPORT1 and xPORT2 determine whether the port is configured as an I/O, data bus, address bus, or control signal. If DPORT1 = 1 and xPORT2 = 0, the function is not valid. The variable x represents port letters A, B, C, D, G, and H.
‡ xPORT1 exists for DPORT only.
§ These pins can be configured only as general-purpose I/O.
¶ Pins D1, D2, D5, G0–G7, and H0 are not available in microprocessor mode.
# Ports vary for each device. See the applicable device pin descriptions in the *TMS370 User's Guide* for ports available on each device.

Coding

Initializing to EPROM/RAM Bank 1 Routine

This program initializes the ports to use bank 1 of the EPROM and the RAM. The TMS370 must be in the microcomputer mode because the chip selects are not available in the microprocessor mode. After an external reset, the TMS370 executes from the internal memory.

```
PORTI     OR     #020h,SCCR0        ;Enable peripheral file
                                    ;autowait cycles
          AND    #0EFh,SCCR1        ;Enable general memory wait
                                    ;cycles (default condition
                                    ;after reset)
          MOV    #0FFh,APORT2       ;Set port A up as a data memory
          MOV    #0FFh,BPORT2       ;Set port B up as the low
                                    ;address memory
          MOV    #07Fh,CPORT2       ;Set port C 0–6 up as the High
                                    ;address memory
          MOV    #000h,CDIR         ;C7 is not needed for address
                                    ;so make it a
                                    ;general-purpose input.
          MOV    #000h,DPORT1       ;
```


PETITIONER ECOBEE
EX. 1010

```
MOV    #0E7h,P02E          ;Set all CSxx to 1 when CSxx
                           ;are outputs
MOV    #0D0h,DPORT2        ;Enable CSH1, CSE1, and
                           ;R/W functions.
MOV    #0E7h,P02F          ;Turn all chip selects to outputs.
                           ;Pull-up resistors are important
                           ;for power-up since CSxx are high-
                           ;impedance floating inputs.
```

Changing to EPROM Bank 2 Routine

This program illustrates how to change the EPROM bank without affecting the RAM banks. In this example, the program runs out of internal memory, disables all EPROM banks, and then enables EPROM bank 2. For this reason, the program must not reside in an EPROM. In order to verify that EPROM bank 2 exists within the system, the program could test various EPROM bank 2 memory locations before executing the branch instruction.

```
AND     #0B9h,DPORT2        ;Disable all EPROM banks (cannot
                            ;be done while executing from EPROM
                            banks.)
OR      #004h,DPORT2        ;Enable EPROM bank 2. When turned off,
                            ;pin outputs a 1 because of the
BR      ROM2                ;initial set–up above, could be done
                            ;in 1 instruction if conditions of
                            ;other chip selects were known.
```

Changing to EPROM Bank 3 and RAM Bank 2 Routine

This routine provides switching from one EPROM bank to another while operating from an EPROM bank. Only one instruction in EPROM bank 2 is needed. The code within the EPROM banks must be synchronized, and the instruction at the address after the move instruction must be a valid instruction within the new EPROM bank.

```
GOROM3    MOV     #003h,DPORT2        ;Enable ROM bank 3 and RAM bank 2.
ROM3                                  ;This address must be the same
                                      ;as the beginning routine address
                                      ;in bank 3 if executing from EPROM.
```

Changing RAM Banks Routine

This method demonstrates how to change RAM banks without affecting the execution from the current EPROM bank. The RAM banks are selected and deselected in the same manner as the EPROM banks. When you change RAM or EPROM banks, the software must ensure that only one bank is selected at a time. This example disables the $\overline{CSE1}$ and $\overline{CSE2}$ signals and enables the $\overline{CSE2}$ signal.

```
AND       #07Eh,DPORT2      ;Turn off all RAM banks (execute
                            ;from EPROM or on chip)
OR        #001h,DPORT2      ;Turn on RAM bank 2. When turned off,
                            ;pin outputs a 1 because of the
                            ;initial set-up above.
```


PETITIONER ECOBEE
EX. 1010

PETITIONER ECOBEE
EX. 1010

Read/Write Serial EEPROM Data on the TMS370

Microcontroller Products—Semiconductor Group
Texas Instruments

PETITIONER ECOBEE
EX. 1010

PETITIONER ECOBEE
EX. 1010

Introduction

This routine reads and writes to the EEPROM, computes the checksum on the first seven bytes of data and places the checksum in the eighth byte. These are conditions for the read/write serial EEPROM data routine:

1. The delay timing is based on a 5 MHz SYSCLK.
2. This routine works with National or XICOR 64 × 4 devices.
3. Data is arranged as seven 8-bit bytes, plus an 8-bit checksum (last byte).
4. The last byte contains the checksum.
5. I/O port assignments:
   - D0 is the clock output
   - D1 is the select output
   - D2 is the read data input
   - D3 is the write data output

PETITIONER ECOBEE
EX. 1010

Read/Write Serial EEPROM Data Routine

```
;REGISTER FILE EQUATES
;
EEPROM    .EQU   R010                    ;8 BYTES OF EEPROM DATA
EEPFLG    .EQU   R018                    ;EEPROM FLAGS
;
; PERIPHERAL FILE EQUATES
;
DPORT     .EQU   P02E                    ;I/O PORT
DDR       .EQU   P02F                    ;DATA DIRECTION REGISTER
;-----------------------------------------------------------------------
;READ EEPROM
;
RDEEP     CALL   SELEEP                  ;STROBE OUT 0s TO EEPROM
          MOV    #64,B                   ;64 MORE THAN ENOUGH
RDEEP5    CALL   CLKZRO
          DJNZ   B,RDEEP5
          CALL   DESEEP
          MOV    #10001010b,A            ;STROBE OUT A COMBINATION.
          CALL   NATINS                  ;XICOR RECALL, NATIONAL READ COMMAND
          CLR    EEPFLG
          BTJZ   #00000100b,DPORT,RDEEP1 ;BRANCH IF NATIONAL PART.
          OR     #00000001b,EEPFLG       ;XICOR PART
          CALL   DESEEP                  ;DESELECT EEPROM.
          MOV    #10000110b,A            ;READ RAM 0.
          CALL   RDXIC
          MOV    #10001110b,A            ;READ RAM 1.
          CALL   RDXIC
          MOV    #10010110b,A            ;READ RAM 2.
          CALL   RDXIC
          MOV    #10011110b,A            ;READ RAM 3.
          CALL   RDXIC
          MOV    #10000010b,A            ;ENTER SLEEP MODE.
          CALL   XICINS
          CALL   DESEEP                  ;DESELECT EEPROM.
          JMP    RDEEP2                  ;DO COMMON EEPROM PROCESSING.
RDEEP1    CALL   DESEEP
          MOV    #10000000b,A            ;READ RAM 0.
          CALL   RDNAT
          MOV    #10000001b,A            ;READ RAM 1.
          CALL   RDNAT
          MOV    #10000010b,A            ;READ RAM 2.
          CALL   RDNAT
          MOV    #10000011b,A            ;READ RAM 3.
          CALL   RDNAT
RDEEP2    CALL   CMPCHK                  ;COMPUTE CHECKSUM.
          CMP    EEPROM+7,A              ;= EEPROM CHECKSUM?
          JNZ    RDEEP3                  ;NO
          OR     #00000010b,EEPFLG          ;YES, SET EEPROM VALID FLAG.
          RTS
RDEEP3    AND    #11111101b,EEPFLG          ;CLEAR EEPROM VALID FLAG.
          RTS
;
;CLOCK NATIONAL READ INSTUCTION, THEN READ IN DATA
;
RDNAT     CALL   NATINS
          CALL   CLKZRO
          JMP    RDDAT
;
;CLOCK XICOR READ INSTRUCTION, THEN READ IN DATA
;
;READ 16 BITS
;
```


PETITIONER ECOBEE
EX. 1010

```
RDXIC     CALL   XICINS
RDDAT     MOV    #16,B
RDDAT1    BTJZ   #00000100b,DPORT,RDDAT2
          SETC
RDDAT2    CALL   SHFTNV
          CALL   CLKZRO
          DJNZ   B,RDDAT1
          BR     DESEEP                    ;DESELECT EEPROM & RETURN.
;
;WRITE EEPROM
;
;THIS ROUTINE COMPUTES  THE CHECKSUM ON  THE FIRST 7 BYTES OF
;EEPROM AND PLACES THAT IN THE 8TH BYTE. THE 8 BYTES ARE THEN
;WRITTEN TO EEPROM LOCATIONS 0–3.
;
WTEEP     CALL   CMPCHK                    ;COMPUTE THE CHECKSUM.
          MOV    A,EEPROM+7                ;PLACE IN EEPROM.
          BTJZ   #00000001b,EEPFLG,WTEEP1  ;BRANCH IF NATIONAL.
          MOV    #10000101b,A              ;XICOR, RECALL.
          CALL   XICINS
          CALL   DESEEP
          MOV    #10000100b,A              ;SET WRITE ENABLE LATCH.
          CALL   XICINS
          CALL   DESEEP
          MOV    #10000011b,A              ;WRITE RAM 0.
          CALL   WTXIC
          MOV    #10001011b,A              ;WRITE RAM 1.
          CALL   WTXIC
          MOV    #10010011b,A              ;WRITE RAM 2.
          CALL   WTXIC
          MOV    #10011011b,A              ;WRITE RAM 3.
          CALL   WTXIC
          MOV    #10000001b,A              ;STORE RAM DATA INTO E2PROM.
          CALL   XICINS
          CALL   DL10MS                    ;WAIT 10 MILLISECONDS.
          JMP    WTEEP2
WTEEP1    MOV    #00110000b,A              ;ERASE/WRITE ENABLE.
          CALL   NATINS
          CALL   DESEEP
          MOV    #00100000b,A              ;ERASE E2PROM.
          CALL   NATINS
          CALL   DESEEP
          CALL   DL30MS                    ;DESELECT FOR 30 MILLISECONDS.
          MOV    #01000000b,A              ;WRITE RAM 0.
          CALL   WTNAT
          MOV    #01000001b,A              ;WRITE RAM 1.
          CALL   WTNAT
          MOV    #01000010b,A              ;WRITE RAM 2.
          CALL   WTNAT
          MOV    #01000011b,A              ;WRITE RAM 3.
          CALL   WTNAT
          MOV    #00000000b,A              ;ERASE/WRITE DISABLE.
          CALL   NATINS
WTEEP2    JMP    DESEEP
;
;COMPUTE CHECKSUM ON FIRST 7 BYTES OF EEPROM
;
CMPCHK    MOV    EEPROM,A                  ;COMPUTE EEPROM CHKSUM.
          ADD    EEPROM+1,A
          ADD    EEPROM+2,A
          ADD    EEPROM+3,A
          ADD    EEPROM+4,A
          ADD    EEPROM+5,A
```


PETITIONER ECOBEE
EX. 1010

```
          ADD    EEPROM+6,A
          RTS
;
;WRITE INSTUCTION TO NATIONAL PART, THEN SEND DATA, DELAY
;
WTNAT     CALL   NATINS
          CALL   WTDAT
          CALL   DESEEP
          CALL   DL30MS                    ;DESELECT FOR 30 MILLISECONDS.
          CALL   SELEEP
          JMP    DESEEP
;
DL30MS    CALL   DL10MS                    ;30 MILLISECOND DELAY
          CALL   DL10MS
DL10MS    MOV    #2,A                      ;10 MILLISECOND DELAY
          CLR    B
DL10M1    DJNZ   B,DL10M1
          DJNZ   A,DL10M1
          RTS
;
;WRITE INSTRUCTION TO XICOR PART, THEN SEND DATA
;
WTXIC     CALL   XICINS
          CALL   WTDAT
          JMP    DESEEP
;
;SEND 16 BITS OF DATA TO EEPROM
;
WTDAT     MOV    #16,B
WTDAT1    CALL   SHFTNV
          JC     WTDAT2
          CALL   CLKZRO
          JMP    WTDAT3
;
WTDAT2    CALL   CLKONE
WTDAT3    DJNZ   B,WTDAT1
          JMP    DESEEP
;
;SEND INSTRUCTION TO EEPROM FROM 'A'
;
;NATINS FOR NATIONAL, XICINS FOR XICOR
;
NATINS    CALL   SELEEP
          CALL   CLKONE
          JMP    INS1
;
XICINS    CALL   SELEEP
INS1      MOV    #8,B
INS2      RLC    A
          JC     INS3
          CALL   CLKZRO
          JMP    INS4
;
INS3      CALL   CLKONE
INS4      DJNZ   B,INS2                    ;NEXT BIT OF INSTRUCTION
          RTS
;
;CLOCK A ONE BIT TO EEPROM
;
CLKONE    OR     #00000001b,DPORT
          JMP    CLKEEP
;
;SELECT EEPROM
```


PETITIONER ECOBEE
EX. 1010

```
;
SELEEP    OR     #00000010b,DPORT
          JMP    CLKZRO
;
;DESELECT EEPROM
;
DESEEP    AND    #11111101b,DPORT
;
;CLOCK A ZERO BIT TO EEPROM
;
CLKZRO    AND    #11111110b,DPORT
CLKEEP    OR     #00001000b,DPORT
          AND    #11110111b,DPORT
          RTS
;
;SHIFT EEPROM DATA LEFT 1 BIT
;
;LEAVES BIT SHIFTED OUT IN CARRY, SHIFTS CARRY VALUE ON CALL INTO
;LAST BIT OF EEPROM
;
SHFTNV    .EQU   $
          RLC    EEPROM+7
          RLC    EEPROM+6
          RLC    EEPROM+5
          RLC    EEPROM+4
          RLC    EEPROM+3
          RLC    EEPROM+2
          RLC    EEPROM+1
          RLC    EEPROM
          RTS
          .END
```


PETITIONER ECOBEE
EX. 1010

PETITIONER ECOBEE
EX. 1010

Part VI
Specific System Application Design Aids

Part VI contains two sections:

EMI Reduction 503

Cost Effective Input Protection Circuitry for the Texas Instruments TMS370 Family of Microcontrollers 525

PETITIONER ECOBEE
EX. 1010

PETITIONER ECOBEE
EX. 1010

PCB Design Guidelines for Reduced EMI

Robert DeMoor
Microcontroller Products—Semiconductor Group
Texas Instruments

PETITIONER ECOBEE
EX. 1010

PETITIONER ECOBEE
EX. 1010

Overview

Electromagnetic interference (EMI) often seems like a mysterious phenomenon. EMI can be difficult to control, and even the results of EMI testing can vary from day to day and from test facility to test facility. The act of controlling EMI has been called black magic or voodoo. However, EMI has been researched for many years, and guidelines have been established that can improve the electromagnetic compatibility (EMC) of systems to which they are applied.

Designing for low EMI from the start of a project results in much easier and less expensive solutions than attempting to fix EMI problems after a design has reached the testing phase of development. Consequently, following a few guidelines for printed circuit board (PCB) design at the beginning of a project can help to minimize the system's EMI while adding little or no cost to the system.

Background and Theory

Knowledge and understanding of a few fundamental concepts can be exercised toward the design of an electronic system in order to improve electromagnetic compatibility (EMC) performance.

EMI Sources, Paths, and Receivers

EMI requires a source, a path, and a receiver. In today's electronics, clocked CMOS integrated circuits often supply the source. The printed circuit board (PCB) and its associated cabling and wire harness, acts as the conductive and radiating part of the path, otherwise called the antenna.

PETITIONER ECOBEE
EX. 1010

Figure 1. EMI Sources, Paths, and Receivers

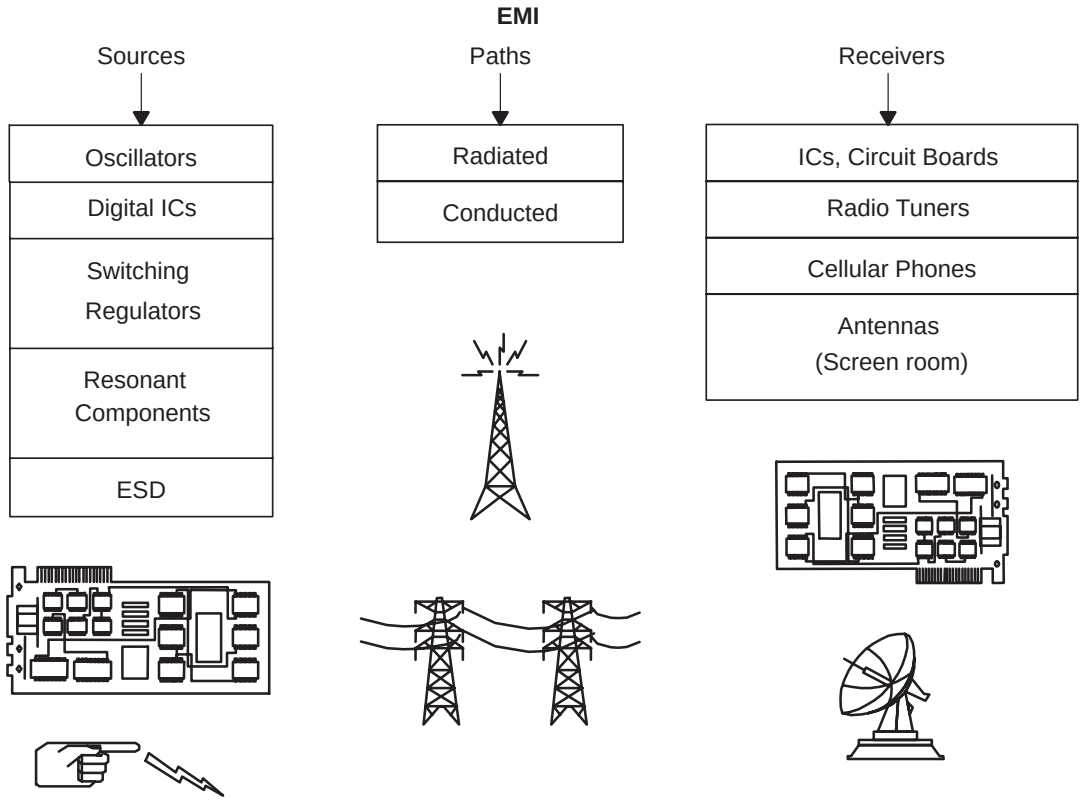

The receiver can be a sensitive electronic module, such as a radio, or it can be an antenna specifically designed to receive electromagnetic emissions in a test environment. Depending on its design and layout, a PCB can either amplify or suppress the emissions of an IC.

Loops and Antennas

The amount of radiation produced by an electronic system is to a large extent proportional to the efficiency of its radiating antennas. Antennas on a PCB include all traces, components, component leads, connectors, and wiring harnesses. In other words, any conductive element on or connected to a PCB can act as an antenna. The challenge is to reduce the efficiency of these antennas. If a radio station has a source broadcasting power of 100 megawatts but has no antenna to broadcast from, nobody will hear it. In much the same way, a well-designed PCB can minimize the amount of radiation that is transmitted from its sources.

Loop Areas

Loop areas can be the most serious EMI threat. A loop can transmit as well as receive electromagnetic energy. Thus, the loop areas associated with a PCB directly affect the emissions and immunity of the system. A PCB can have many loops, and each loop contributes to the radiated emissions from the system. As the size of a loop increases (up to 1/4 wavelength of the signal), so does the efficiency of the loop as a radiator. Thus, to minimize radiated EMI, loops must be made as small as possible.

PETITIONER ECOBEE
EX. 1010

The Loop: Current Flow Path

Current must flow in a loop. If the loop is broken, the same current will no longer flow. Current flowing through a loop generates electric and magnetic fields, with field strength proportional to loop size and to the square of the frequency for loops that are smaller than 1/4 of the wavelength of the frequency of interest [3]. Loops also receive emissions from other devices, and thus allow an increased susceptibility of the circuit to disturbances.

Current must return to the point from which it originated via the path of least impedance. The *path of least impedance*, however, is usually not the *path of least resistance* at high frequencies. In Figure 2, paths A and B represent two different possible current return paths, either within a ground plane or on a ground grid network. Path A is the lowest resistance current return path for the output signal from the MCU, since its path is the shortest. However, at frequencies over about 10 kHz, the inductive reactance of a wire is larger than the resistance of the wire. Therefore, any signal faster than about 10 kHz will return through path B, since this path is less inductive than path A. On a PCB, the return current may not have any other options. If path B were removed, a very large signal/return loop would be created. This would undesirably provide a more efficient radiating (and receiving) antenna for high-frequency EMI than if path B were there. Loops of this nature should be avoided.

Figure 2. Paths of Least Impedance vs. Paths of Least Resistance

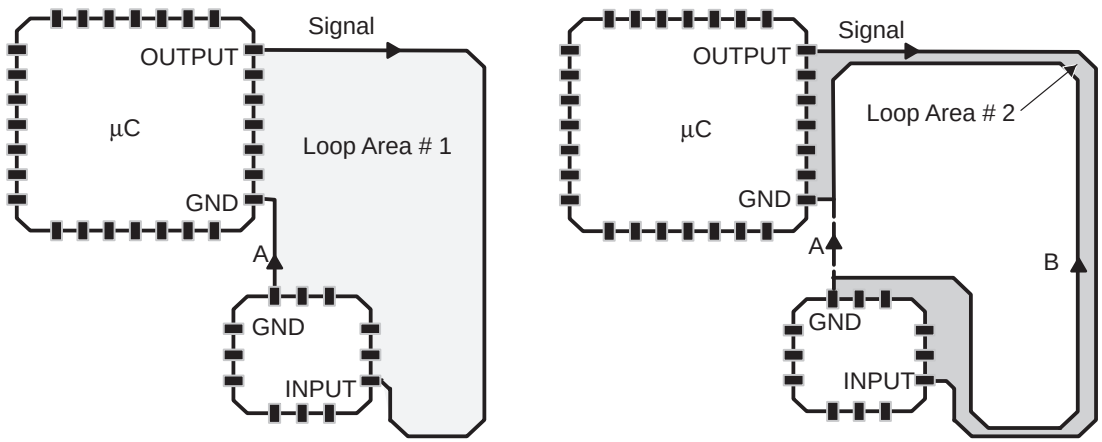

A = Low-frequency signal-return path
Loop Area #1 = Loop of least resistance

B = High-frequency signal-return path
Loop Area #2 = Loop of least impedance at high frequency (assumes conductor B is present)

Harmonics from a microcontroller's system clocks tend to couple onto the device's inputs and outputs. Then, the coupled high-frequency EMI uses the antennas provided by the routing of the I/O and its return path in order to radiate. Since system clocks usually operate faster than 1 MHz, system clock noise and harmonics will take the path of least impedance (path B).

Every signal has a signal return path associated with it. Most often, this signal return path is called ground. The term ground, however, is a misnomer. A true ground is a node at a constant potential through which no current flows under normal conditions, like the safety connection on a computer chassis. If current flows through the ground, then two points on the ground will not be at the same potential due to the resistance of the conductor. If the ground is no longer at a constant voltage, then it is more accurately called a current

PETITIONER ECOBEE
EX. 1010

return path. Thus, the loop area associated with a signal and its return is the loop between the signal and its lowest-impedance ground path. This area must be carefully controlled.

PCB traces carrying high frequencies, large voltage swings, or large amounts of current are the most serious EMI offenders. In microcontrollers with a divide-by-4 clock option, the oscillator supplies the highest frequency content of the device. Nevertheless, every pin on a MCU is a high frequency source if SYSCLK is greater than 1 MHz. The SYSCLK fundamental and its harmonics are coupled to the I/Os and can radiate throughout the PCB. Consequently, care must be used to minimize the loop areas associated with all signals and returns. The most attention should be paid to power, clocks, connectors, and fast switching signals.

Since system clock harmonics are difficult to control, it is desirable to run a microcontroller as slowly as possible while still maintaining sufficient throughput for all of the required system operations. Harmonics of a 1 MHz system clock are less severe than harmonics of a 5 MHz system clock.

Differential Mode and Common Mode Radiation

Differential mode and common mode noise provide the means for radiation to spread throughout a PCB, onto connecting cables, and out into the environment.

Differential-Mode Noise

Differential-mode noise is created by a signal traveling to a load and the return current traveling back to the source. The currents in the signal and the return are traveling in opposite directions.

Figure 3. Differential-mode Radiation

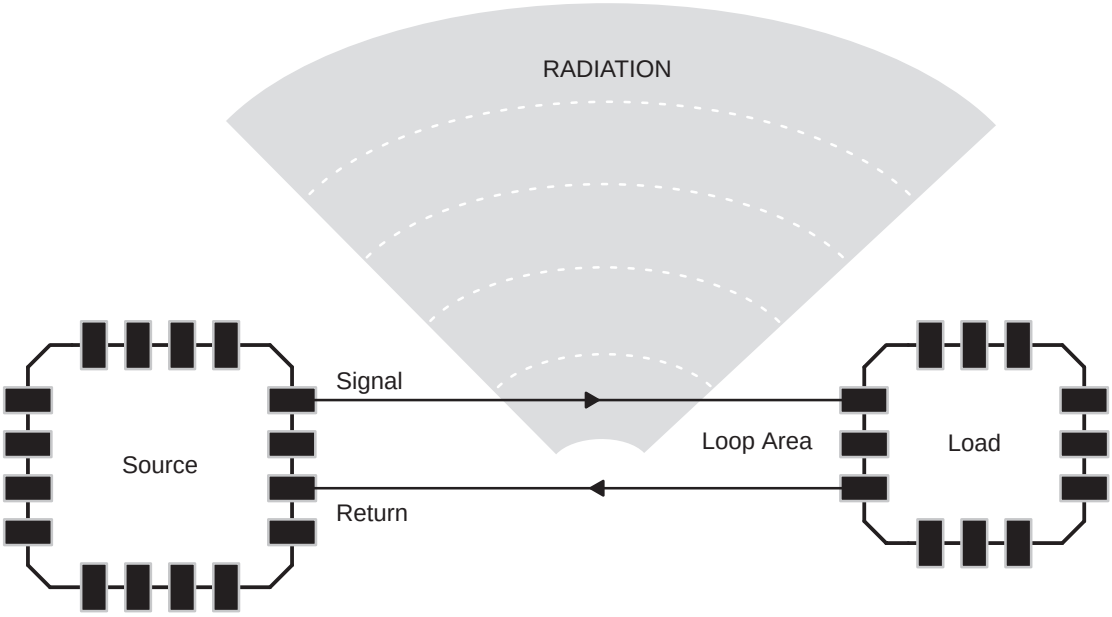

Differential-mode noise increases with increasing loop area of the signal path. Thus, controlling loop areas significantly helps to control differential mode emissions.

Common-Mode Noise

Common mode noise is the result of unwanted voltage drops within a circuit which are usually the result of ground noise. Typically, the predominant source of common-mode noise is the cabling attached to a

PETITIONER ECOBEE
EX. 1010

PCB. These cables look like monopole antennas in the EMI world. The cables radiate electric fields and are driven by the noise on the PCB's ground system.

Figure 4. Common-mode Radiation

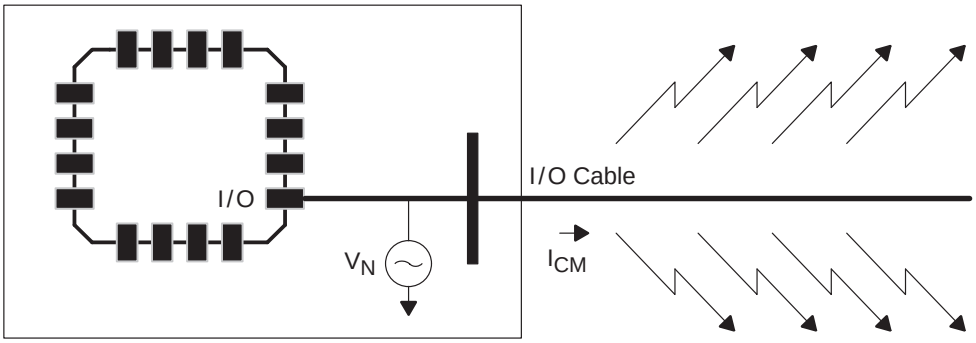

Common mode noise can be controlled by lowering the source potential, which usually is that of the ground system. Thus, gridding the ground is also an effective measure against common mode noise. Additional measures include placing common-mode impedance (ferrites/chokes) in series with cabling attached to the PCB and shunting the noise current to ground with bypass capacitors.

Coupling

Coupling provides the path for a source to radiate to a receptor. Both differential-mode noise and common-mode noise are forms of coupling. Another concern, however, is the occurrence of hidden coupling effects. One signal can couple noise onto another signal, which may be routed over a long distance. Power, oscillator, and clock signals carry particularly potent supplies of radiation that can be coupled into nearby I/Os. These I/Os can then carry the noise throughout the circuit, as illustrated in the following figure. Once this happens, the loop area associated with the coupled noise can grow enormously. In the following figure, the coupling effect capacitor is not part of the design schematic, but represents an actual path of high-frequency noise between the OSCOUT signal and the I/O. The capacitive coupling represented in the figure is caused by the close proximity of the OSCOUT and I/O PCB trace routes.

Figure 5. Oscillator Coupling Onto I/O Signal

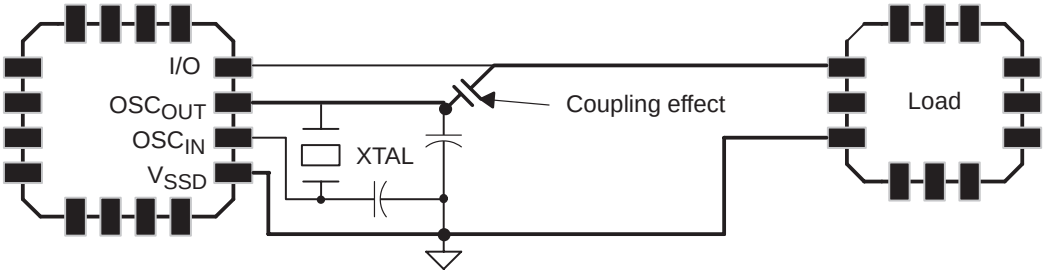

Heavy lines indicate path (and loop area) of noise coupled onto I/O.

The oscillator contains the highest frequency of the MCU and can be the worst EMI threat of coupling noise onto nearby I/Os. Additionally, if the CLKOUT pin is used to supply ECLK or SYSCLK to other circuitry, that signal can supply potent radiation and coupling to other signals. The solution, however, is relatively simple: *keep oscillator, power, and clock signal loops small, and avoid running I/Os next to those noisy sources, especially for long distances.*

PETITIONER ECOBEE
EX. 1010

High-Frequency Characteristics of Passive Devices

A misconception about PCB design is that the location of components does not matter as long as they are connected according to the schematic. Unfortunately, circuit elements are not always what they seem to be. For instance, at high frequencies, a capacitor becomes more inductive than capacitive due to the inductance of the leads and the PCB trace. The high-frequency schematic of a capacitor and a PCB trace is an RLC circuit. When noise is introduced into that circuit, it can resonate. In fact, a capacitor intended to decouple noise can actually become self-resonant and radiate noise if it is not placed close to the noise source. The absence of a low-impedance ground (signal return) path will cause the same effect. A low-impedance ground path means a path with minimal loop area between itself and the signal since trace inductance dominates trace resistance at high frequencies. The following figure illustrates the high-frequency characteristics of some common passive circuit elements.

Figure 6. Hidden Schematic Effects of Common Passive Circuit Elements [1]

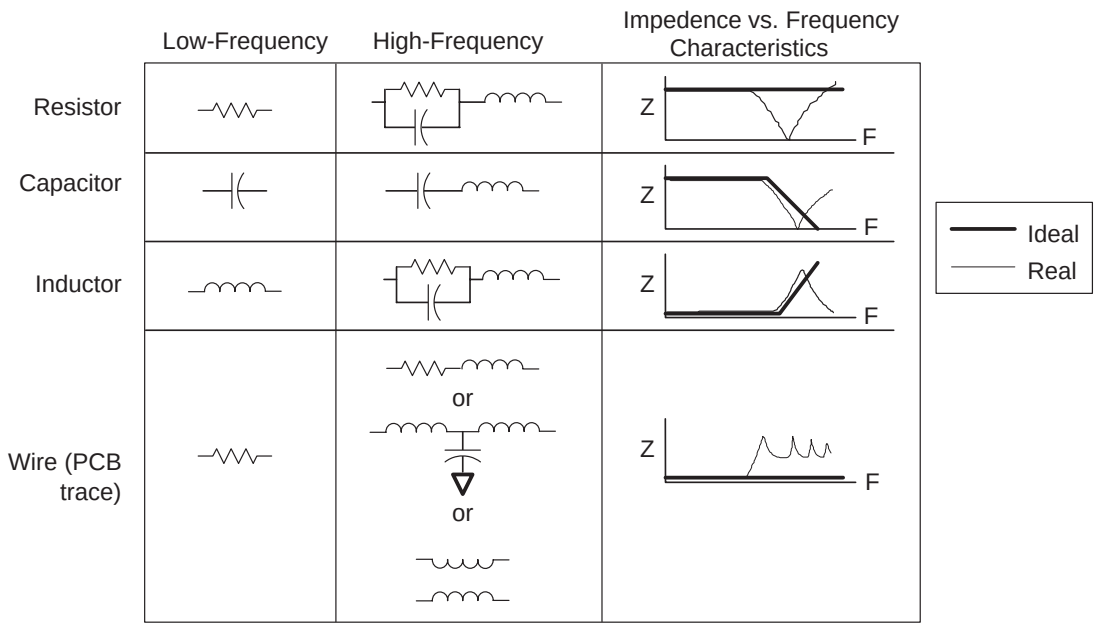

The pitfalls of the high-frequency schematic can be avoided with careful attention to the placement of passive circuit elements.

Reciprocity of Emissions and Susceptibility

Generally, PCB design guidelines which reduce EMI emissions also reduce susceptibility to outside sources of EMI. If the antennas (that is, PCB traces and wiring harnesses) of a system are reduced in radiating efficiency, they are also less efficient at receiving interference from other sources.

However, this reciprocity applies only to the antennas and not to the source and sink capabilities of the pins connected to the antennas. Consequently, the signals that are the worst emitters are usually not the most susceptible signals. For instance, clock output signals and high-frequency oscillators are some of the worst EMI producers. However, reset and control signals can cause great damage when corrupted by interference. These signals should get high priority for EMC when routed on a PCB.

PETITIONER ECOBEE
EX. 1010

PCB Design Implementation

The implementation of PCB design guidelines to circuit board layout is critical for achieving electromagnetic compatibility (EMC). Furthermore, it is most cost-effective to design a PCB for EMC at the beginning of the design cycle since later changes to improve EMC become more difficult and costly. However, there is little or no cost involved with implementing PCB design guidelines for reduced EMI at the beginning of the design cycle.

The three most important aspects of PCB design are floor-planning, grounding, and bypassing, as will be discussed in the following sections.

Floor-Plan PCB First

Floor-planning a PCB is the first step toward designing for EMC. Floor-planning consists of creating zones on the PCB for analog, digital, and noisy components and providing proper space for grounding. Also, devices should be arranged to minimize routing distances of EMI-critical signals, such as clocks, power, cabling, and control signals.

Board Zoning

Board zoning allows the grounding structures to be optimized for different types of circuitry. For instance, digital circuits should be grouped together, and analog circuits should be grouped in another location. This configuration will reduce coupling of digital noise onto sensitive analog circuitry. Noisy components, like relays, motors, and high-current-consumption devices, should be separated from both digital and analog circuitry.

PETITIONER ECOBEE
EX. 1010

Figure 7. PCB Zoning

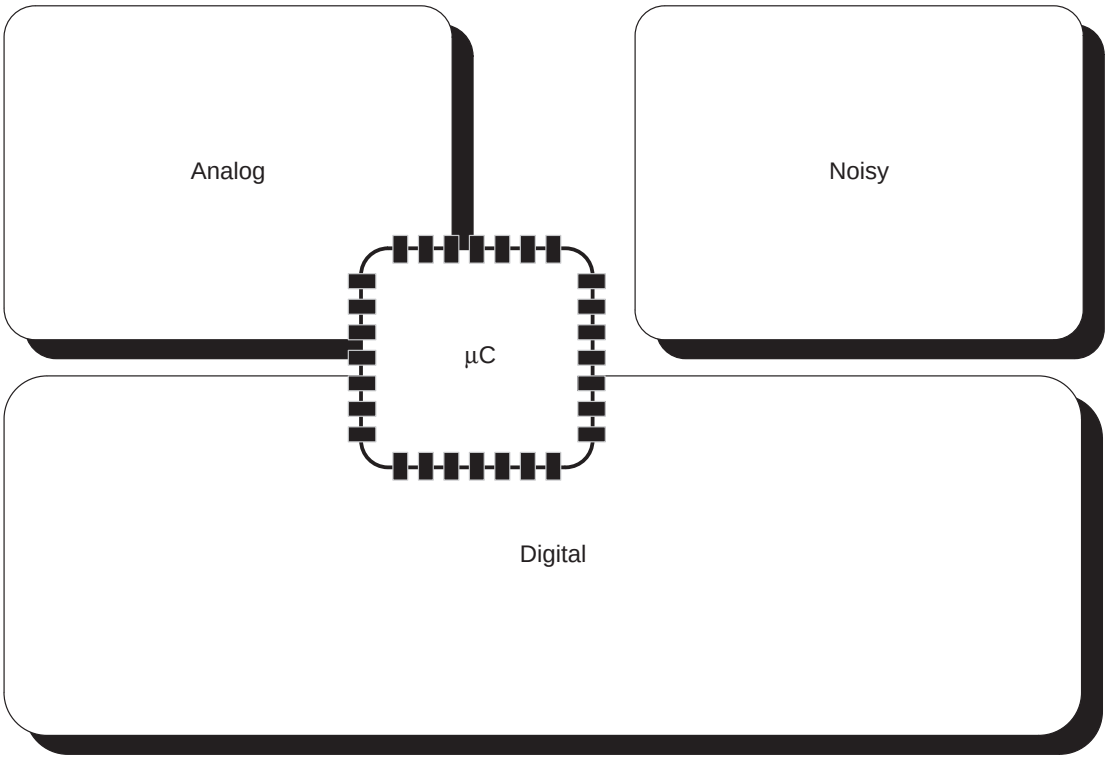

Space for Ground Structures

An important aspect of board zoning is to allow space for proper grounding. Space for grounding should be provided before the placement of IC's and components is finalized. Grounding is an extremely important facet of PCB design, but its importance is sometimes overlooked.

Minimize Routing Distances

The placement locations of IC's on the PCB should minimize routing distances between IC's and other components.

Short Routes for High-Frequency Signals

IC's and components producing and/or receiving fast signals (that is, CLKOUT or an SPICLK of greater than 50 kHz) should be placed near each other to minimize routing distances associated with these signals, which tend to generate EMI. Also, a low-impedance (minimal loop area) signal return (ground) should be provided for fast signals. Moreover, routing ground on both sides of a high-frequency signal serves to provide some shielding for other nearby signals.

Grounding

Along with board zoning and IC placement, proper grounding is of fundamental importance to achieving electromagnetic compatibility. Since a ground is really a current return path in most cases, the goal of grounding is to provide the lowest impedance current return path possible without generating additional noise. A ground plane will accomplish this task for all high-frequency noise and signals since the return

PETITIONER ECOBEE
EX. 1010

current for the high frequencies will follow a path directly under the signal and back to the source. While a ground plane is ideal for minimizing loop area and impedance, it will not always solve capacitive or inductive coupling problems.

A ground grid for digital circuitry can provide low-impedance signal return paths for high-frequency noise on a two-layer board and does not require the additional cost of a ground plane, which usually requires at least a four-layer PCB. For analog circuitry, a single-point grounding scheme is often better in order to avoid the presence of ground loops. Single-point grounding is also preferred for noisy or high-power circuitry.

To protect sensitive analog circuitry from digital noise and to protect both analog and digital circuitry from even noisier components such as relays and motors, the analog, digital, and noisy parts of a system should be separated from each other and connected only at a low-impedance ground node.

In a mixed-signal environment, the divisions between analog and digital ground may seem unclear. However, the analog sections of a mixed-signal IC (that is, ADC) should be provided with an analog grounding scheme, and digital sections of the same IC (that is, CMOS digital I/O), including its signals and routing, should be provided with a digital grounding scheme.

Digital: Grid the Ground

Ideally, each signal should be routed next to a ground (signal return). Since this is not usually possible on a two-layer board, gridding the ground is the next best alternative. A four-layer PCB often includes a ground plane which provides a low-impedance signal return path for each signal. On a two-layer board, a ground grid provides a low-impedance signal return path that resembles that of a four-layer board. Thus, digital ground should be in the form of a grid on a two layer board in order to keep loop areas small and thus to minimize the impedance of the ground structure. Following is an example of what a ground grid on a two-layer PCB can look like.

PETITIONER ECOBEE
EX. 1010

Figure 8. Ground Grid

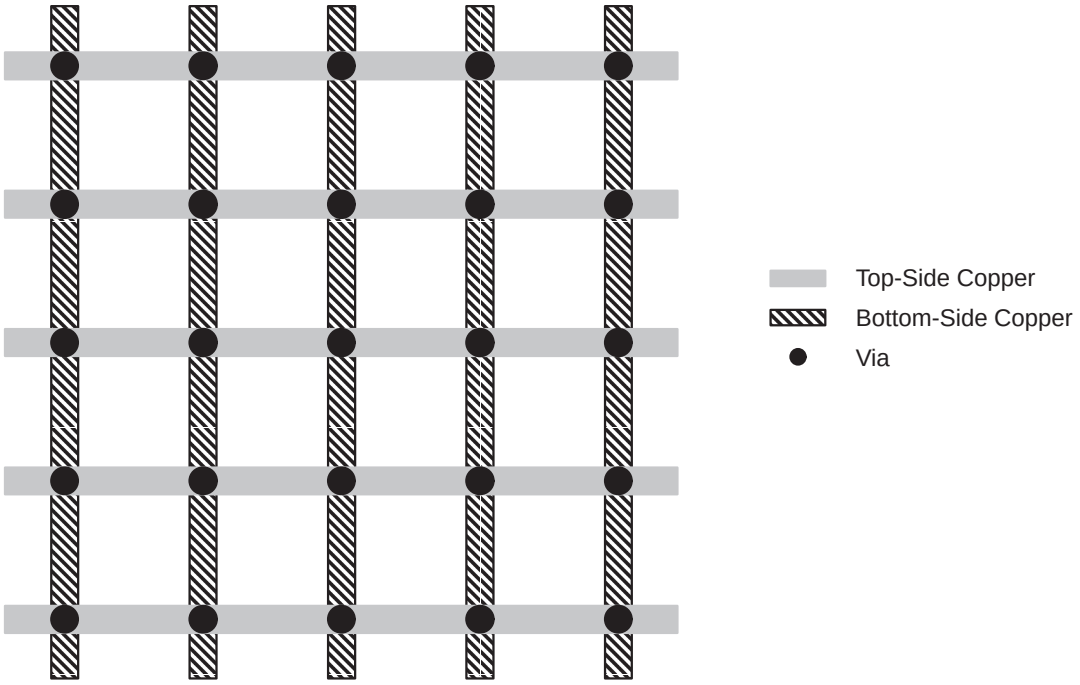

A ground grid can be created by running ground lines horizontally on one side of the PCB and vertically on the other side. Where the lines cross, they should be tied together with vias (feed-through connections) to form a grid. The size of the grid should be kept small, preferably no larger than 1 square inch, and smaller grids are better. Signals can then be routed between the ground lines, horizontally on one side and vertically on the other side through a via. It is usually more effective to lay down the ground grid *before* routing signals. Otherwise, space for a ground grid rarely is provided.

With this technique, signals can still be routed to any area on the board, and each signal is never more than one half inch from a current return path.

Additionally, a localized VSSD (digital ground) plane should be placed under the microcontroller to provide shielding. This micro-ground consists of a ground area on the bottom layer of the PCB underneath the microcontroller that extends about a quarter of an inch outside of the package outline. It should be tied to the microcontroller's ground pins, and the V_{CC} bypass capacitor, as well as all other signal bypassing capacitors, should be tied to this micro-ground. Similarly, the oscillator leads and tank capacitors should be enclosed by the micro-ground.

PETITIONER ECOBEE
EX. 1010

Figure 9. Micro-ground

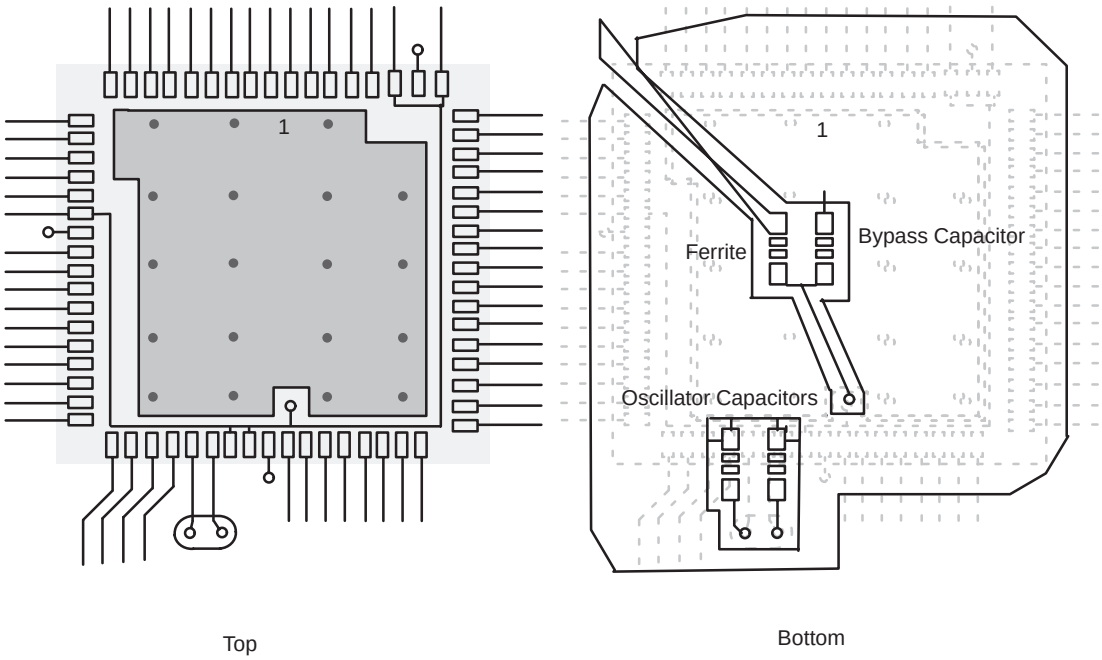

In this example, the topside layer of the PCB is on the left, and the bottom side is on the right. The topside traces are shown in dotted line form on the bottom side diagram for alignment purposes. Notice how the oscillator capacitors are located on the inside of the resonator in order to reduce loop area. The ferrite chip and bypass capacitor are also located in positions for minimum loop areas, and the main power lead runs almost directly under the microcontroller's lead finger for the ground (on pin 9 for 'x5x devices).

The significance of a ground grid should not be under-emphasized. The ground system is critical for achieving low EMI.

- "The ground system is the foundation of a digital logic printed wiring board. Therefore *all digital printed wiring boards must have either a ground plane or a ground grid*" [3].
- "It is important to put the ground grid on the board first, before locating the signal paths" [3].
- "Critical traces need a return path less than 0.1" away" [5].
- "With regard to noise control, the single most important consideration in the layout of a digital logic system is the minimization of the ground inductance. Ground inductance in digital systems can be minimize by using a ground plane or ground grid" [3].
- "*An effective and well-designed ground grid is one of the most important aspects in the ability of the product to meet the regulatory limits and avoid functional problems*" [2].
- "...there are data that indicate a correlation between reduced *ground drop* on a PCB (high-frequency voltage differences between two points on the ground conductor) and a reduction in the radiated emissions of that PCB" [2].

PETITIONER ECOBEE
EX. 1010

- "The design of an effective ground grid on a PCB is a critical aspect to the regulatory compliance of the PCB and its host system" [2].

Analog Ground

It is important to distinguish between analog and digital grounds. Digital grounds should be designed to return high frequencies through a low impedance path, and analog grounds should be designed to return low frequency current or dc to its origin through a low-resistance path.

Parallel or series ground connections provide the cleanest current return paths for analog signals. Parallel ground connections are best, but this scheme is cumbersome to design on a PCB. Series ground connections are less desirable, but easier to design. Thus, a parallel connection scheme should be used for the most sensitive analog signals, and series grounds can be used for less sensitive analog circuitry. The following figure illustrates series and parallel ground schemes.

Figure 10. Series and Parallel Ground Connection Schemes [3]

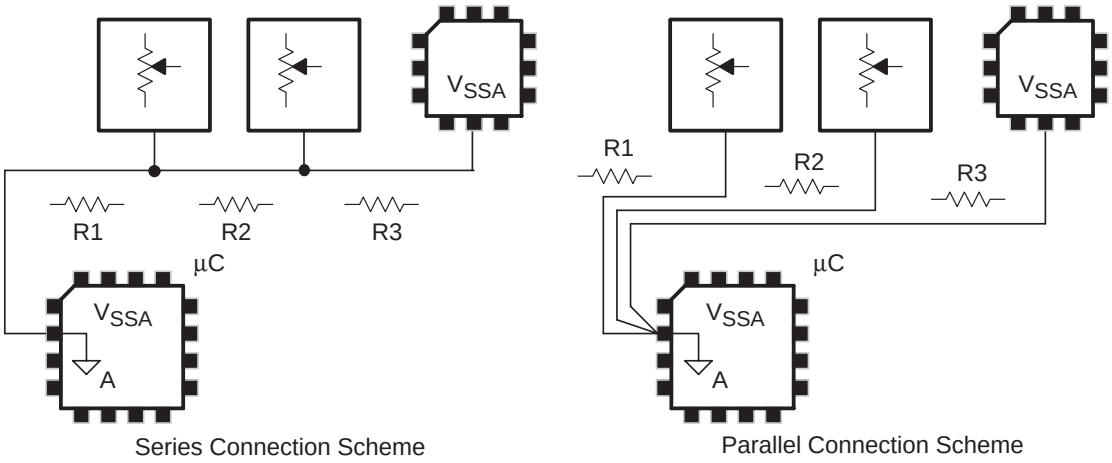

The shortcoming of series ground connections is that more current flows through the ground closest to the beginning of the chain than through the ground toward the end of the chain. Thus, according to Ohm's law, the series resistance of the ground trace causes the analog circuitry at one end of the series ground connections to be at a different ground potential than the analog circuitry at the other end of the series ground connections.

Noisy Ground

"Noisy" grounds support circuitry that generates a significant amount of ground bounce, such as relays and motors. This ground should be isolated from the digital and analog grounds in order to keep high levels of ground noise away from analog and digital circuitry, which may be susceptible to such noise.

Low Impedance Ground Node

The digital, analog, and noisy grounds should be connected together at a low impedance ground point. This is often the point at which ground enters a circuit board and where the bulk decoupling capacitor is located.

Ground Width

Ground traces should be as wide as possible in order to provide the lowest impedance path for current. However, in cases where wide ground traces are unacceptable, thin ground traces are better than no ground

PETITIONER ECOBEE
EX. 1010

traces at all. Thin ground traces can still reduce loop areas, whereas an absence of ground traces can result in large loops. One approach for designing a two-layer board is to lay down a thin-traced ground grid, making routes wider along high-current paths, and to increase the width of the traces, where possible, after routing all of the other signals.

Connector Grounds

Improper grounding between IC's and connectors (to off-board wiring or cable harnesses) can result in serious common-mode radiation and can even cause bypass capacitors to resonate. Thus, grounding between digital components and connectors is of paramount importance for keeping noise off of a wiring harness.

There should be a low-impedance ground between a microcontroller and a connector so that bypass capacitors, located at the connector, can return noise to its source without allowing the noise to travel onto the wiring harness.

Power Routing

Power should be routed over (under) or next to ground whenever possible. The power lines typically contain the most high-frequency noise in a digital system. Therefore, their routing on a PCB should receive special attention. Routing power directly over the ground results in a path with low inductance and minimized radiating loop area. Routing power and ground next to each other is the next best alternative.

Additionally, series filters, such as ferrites or inductors, often prove helpful for reducing noise on power supply routes. A π configuration can be used on each of the V_{CC} pins An example of a π filter appears in the figure below.

Figure 11. π Filter Configuration

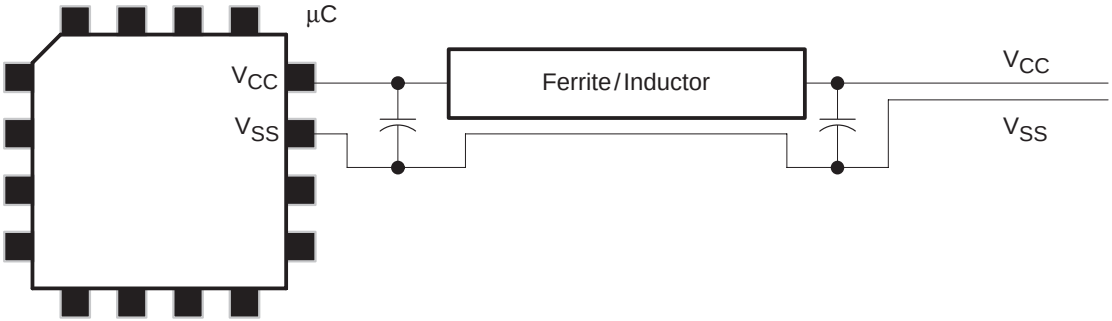

The importance of choosing the right ferrite or inductor should not be underemphasized. For example, the element should exhibit a high impedance at frequencies near 100 MHz, if that is the part of the spectrum of most importance for the application. An inductor with a high impedance at 10 MHz may do nothing to filter noise at 100 MHz.

Also, the ferrite should be located very close to the pin of the MCU in order to obtain the greatest benefit of suppressing noise at the MCU and keeping the noise off of the PCB trace.

Clock Lines

Clock lines can contain high frequencies with 5 V rail-to-rail switching. This optimizes their ability to radiate EMI. Fast signals, such as an SPI with a 50 k+ baud rate also provide ample energy for radiating. Thus, special precaution should be taken for fast signals. Clock lines and fast signals should be routed over or next to the digital ground in order to minimize differential-mode radiation from these sources. If fact,

PETITIONER ECOBEE
EX. 1010

routing a ground on each side of these fast signals provides a good signal return while also providing some shielding for the nearby signals. Additionally, routing fast signals to connectors (and wiring harnesses), or routine adjacent to other signals that are routed to connectors should be avoided. The fast signal lines should also be properly bypassed, as discussed later.

Multi-Layer Boards

Multi-layer boards can provide many EMC benefits over two-layer boards. Sometimes, providing adequate grounding for EMC on a two-layer board is extremely difficult due to space, routing, and component placement constraints. If this is the case, then a multi-layer board can improve the system EMC performance with less time required for finding EMC fixes.

Multi-layer boards can provide several weapons against radiated EMI. First, multi-layer boards provide low-impedance return paths for all signals. Since the high-frequency component of every signal will return to its source via the path of least impedance, every signal will be returned on the ground plane directly under the path of the signal. For this reason, the ground plane is sometimes called an image plane. Consequently, the loop area associated with each signal corresponds to the length of the trace and the thickness of the PCB between the signal layer and the ground layer. On a board without a ground plane, the loop area corresponds to the area between the signal and the return trace (usually ground), and this can be quite large.

Multi-layer boards can take advantage of the shielding capabilities of a ground plane if the plane is on the outside of the board. In fact, imbedding the signal layers in the center of the board, with ground planes on the outsides of the board, provides shielding for much of the system. This configuration is very good for EMC; however, it may add difficulty for circuit debug since all of the signals will be covered over. Nevertheless, a generous number of test points and vias as well as a copy of the board layout should provide an engineer with the necessary tools for circuit debug for a board with buried signals.

Sometimes only one layer of ground plane is available. If that is the case, it usually should be on the outside of the board (on the side with the fewest components) in order to provide the best shielding effectiveness. If the ground plane is buried between two signal layers, its potential shielding effectiveness is reduced. If the only ground plane is located on the side of the board with the most components, the space required for the components (especially surface mount) tends to create many holes or gaps in the ground plane, thus reducing its shielding effectiveness *and* its image plane effect. Therefore, if locating a ground plane on the outer layer of a multilayer PCB results in a chopped up ground plane, it should probably be implemented on an inner layer instead. Regardless of where the ground plane is located, the image plane effect usually provides a reduction of common-mode and differential-mode emissions.

Even when designing a PCB with a ground plane, *good two-layer board design practices should still be followed*. Ground planes do *not* cure EMI, they just help to reduce it. Following are a few points that are often overlooked when designing multi-layer PCBs:

- Avoid routing clock lines or other high-speed signals near connectors or wiring harnesses. Also avoid routing these high-speed signals near other signals that are routed to connectors or wiring harnesses. Noise may couple from one signal to another which may be routed to a connector and wiring harness, providing several feet of antenna for the radiated noise to propagate from.
- If clocks or high-frequency signals are exposed on the outer layer of the PCB, GND should be routed on each side of the signal to couple noise back to the source and to provide some shielding for other nearby signals.
- Components, such as resistors and small capacitors, which filter emissions from the IC should be kept as near to the pins as possible in order to suppress the noise within a minimal area. These components should not be confused with circuitry designed to keep voltage spikes from entering

PETITIONER ECOBEE
EX. 1010

the PCB (that is, diodes, MOVs, and large capacitors), which usually should be located near the power and/or signal connectors on the PCB.

- Avoid chopping up (making gaps) in the ground plane by placing signal traces on it. When the return current (GND current) cannot follow the path of least impedance (the same path as the associated signal), radiating loops are created. The following figure illustrates how a slot in a ground plane creates a less direct path for ground current and creates a larger signal-to-return loop area.

Figure 12. Slot in a Ground Plane

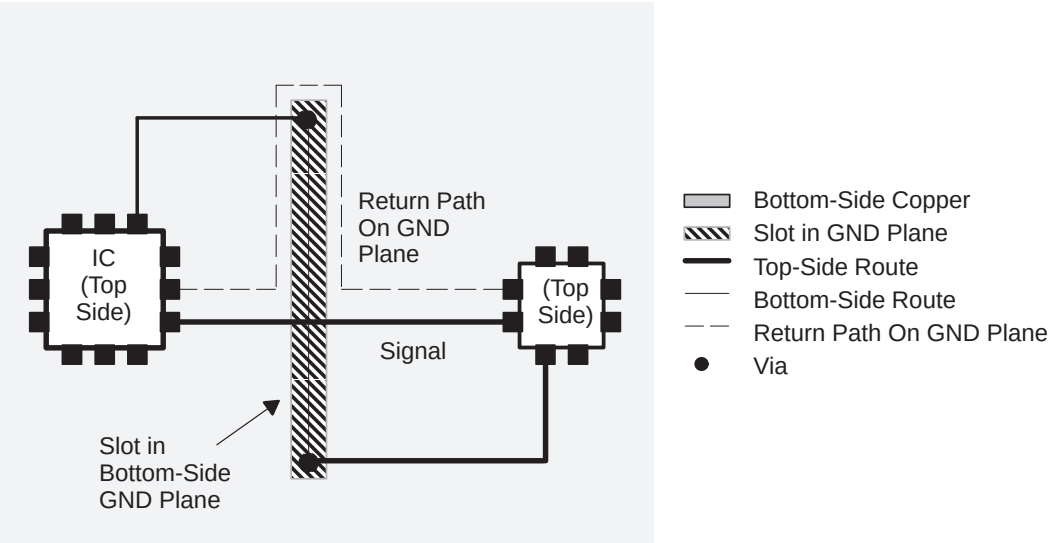

- Sometimes, the placement of connectors, DIP devices, or multiple vias (feed-through holes) inadvertently chops up a ground plane when copper is not allowed to flow between the holes. Avoid these gaps, since they deteriorate the benefits of a ground plane.
- Signal layer connections to ground planes (that is, a route from the GND side of a capacitor to a via connecting it to GND) should be kept as short as possible in order to take advantage of the low-impedance properties of the ground plane.
- Isolated, or private-line, V_{SS3} (analog ground) traces can be routed on a signal layer in order to assure clean analog ground and to avoid ground loops, which may detrimentally affect analog circuitry. This may or may not be necessary, depending on the desired accuracy of the analog circuitry and also the levels of noise on the ground planes.

Bypassing

Bypass capacitors serve several functions for digital logic. When used on power pins, they supply current for digital switching. When used on I/O pins, bypass capacitors provide current return paths for high-frequency noise. They also help to round the edges of a digital signal and thus reduce the harmonic content of the signal.

Power Bypassing: V_{CC}/V_{SS}, V_{CC3}/V_{SS3}

Inside TMS370 devices, V_{CC} is not connected internally to V_{CC3}. Likewise, V_{SS} is not directly connected internally to V_{SS3}.

PETITIONER ECOBEE
EX. 1010

V_{CC} should be bypassed to V_{SS}. Similarly, the analog supply (V_{CC3}) should be bypassed only to analog ground (V_{SS3}).

Since V_{CC} and V_{SS} supply the current to the digital logic, they contain the most high-frequency electromagnetic energy of any pins on a device. Thus, the loops created by V_{CC} and V_{SS} should receive the most attention with regard to placement of the capacitors and the loops created by their connections. Therefore, the V_{CC} bypass capacitor (0.1 µF) should always be attached as close as possible to the device's V_{CC} and V_{SS} pins, and should provide minimal loop areas for the high-frequency currents.

The locations and routing of the bypass and load capacitors for the analog circuitry (V_{CCA}/V_{SSA}) (V_{CC3}/V_{SS3}) should take next priority after the digital supply capacitors.

Signal Bypassing

Ideally, every I/O on the device should have an RC filter attached close to the pin. This provides both wave-shaping for the signal and smaller return paths for high-frequency noise. However, this is usually not necessary or practical.

On the other hand, some pins that have high-frequency signals should have at least a small bypass capacitor connected to the digital ground. SPI pins with greater than 50 k baud rates and the CLKOUT pin, if SYSCLK is active on the pin, are good candidates for bypass capacitors of 50 pF or less to V_{SS} and series resistors. The value of the series resistor depends on the loading and current drive capability of the output; however, 100 Ω is a good value to start with.

Any filter components attached to a device pin should be located as close as possible in order to keep any noise close to the microcontoller and off of the rest of the circuit board. Moreover, a proper return path for a bypass capacitor, from the capacitor's ground to the microcontroller's ground, is essential for returning high-frequency noise to its source while providing minimal radiating loop area.

Connector Bypassing

Signals which are routed to a connector should also be bypassed at the connector with a small capacitor. This helps to keep high frequencies off of the cables and/or wiring harness by providing a high-frequency path for any noise to get back to its source before entering the wiring harness. Proper grounding must be supplied between the microcontroller and the connector in order to keep the bypass capacitors from radiating rather than filtering noise.

PETITIONER ECOBEE
EX. 1010

Summary

By understanding and applying a few fundamental PCB design guidelines, a designer can reduce the radiated EMI of a system inexpensively at the beginning of the design cycle. Following is a summary of PCB design guidelines for reduced EMI:

1. Floor-plan the PCB first.
   a. Analog, digital, and noisy components should be located on the PCB by category.
   b. Allow space for grounding.
   c. Minimize routing distances.
   d. ICs that have high-frequency signals (that is CLKOUT or SPICLK of greater than 50 kHz) should be placed near each other to minimize routing distances for clocks and fast signals.
2. Grounding
   a. Digital: Grid the ground.
   b. Analog: Use a parallel grounding scheme for sensitive analog circuitry, and use series grounding scheme for less sensitive analog circuitry.
   c. Noisy: Isolate from analog and digital grounds.
   d. Low impedance ground node: Connect digital, analog, and noisy grounds together at the lowest impedance ground node on the PCB.
   e. Connectors: Provide a low-impedance ground between IC's and connectors.
   f. Fast signals: Run a digital ground next to fast signals (or over if possible).
3. Bypassing
   a. Power: Capacitors should be located as near as possible to V_{CC} and V_{SS} pins.
   b. Signal: Capacitors should be located as near as possible to the associated pins.
   c. Connector: Proper grounding between the microcontroller and a connector is necessary for the bypass capacitors at the connector to keep noise off of the wiring harness.

Priority of Guidelines

1. Locate devices on the PCB for EMC optimization of: 1) grounds, 2) power, and 3) routing (especially clocks and high-speed signals).
2. Provide a ground grid for a two-layer board or a ground plane(s) for a multi-layer board.
3. Route the power and place the filter components.
4. Route the clocks and high-speed signals and place the filter components.
5. Route other noise-making or noise-susceptible signals. Also give attention to the reset and control signals.
6. Route all other circuitry.

PETITIONER ECOBEE
EX. 1010

References

1. Gerke, Daryl and Bill Kimmel, *EDN: The Designer's Guide to Electromagnetic Compatibility*, Cahners Publishing Company, 1994.
2. Paul, Clayton R., *Introduction to Electromagnetic Compatibility*, John Wiley & Sons, Inc., 1992.
3. Ott, Henry W., *Noise Reduction Techniques In Electronic Systems*, second edition, John Wiley & Sons, New York, 1988.
4. Schneider, John, *Automotove PCB Design Guidelines for Reduced EMI*, Texas Instruments, 1992
5. Van Doren, Tom, *Grounding and Shielding Electronic Systems*, T. Van Doren, 1993.

PETITIONER ECOBEE
EX. 1010

Part VI
Specific System Application Design Aids

Part VI contains two sections:

EMI Reduction 503

Cost Effective Input Protection Circuitry for the Texas Instruments TMS370 Family of Microcontrollers 525

PETITIONER ECOBEE
EX. 1010

PETITIONER ECOBEE
EX. 1010

Cost Effective Input Protection Circuitry for the Texas Instruments TMS370 Family of Microcontrollers

David T. Maples
Michael S. Stewart
Microcontroller Products—Semiconductor Group
Texas Instruments

PETITIONER ECOBEE
EX. 1010

PETITIONER ECOBEE
EX. 1010

Introduction

The Texas Instruments TMS370 microcontroller family has been designed to reduce the system cost of external input protection circuitry. Features of the TMS370 family that allow this cost advantage include:

- TTL specified I/O levels
- Internal diode protection circuitry

Today's microcontroller based systems are subjected to electrically harsh environments that require the existence of input protection circuitry. Depending on the embedded system environment and the design of the microcontroller, this external protection circuitry can add substantial system costs. Microcontroller based systems typically have a significant number of inputs and outputs (I/O). The I/O will be exposed to an environment that requires the use of discrete circuitry to condition input signals and to protect the microcontroller from high voltage transients. An opportunity for cost savings exists if the input circuitry of the microcontroller is designed with these challenges in mind.

The purpose of this application report is to outline the cost advantages resident with the TI TMS370 microcontroller family when used in an automotive system with a 12 V dc battery and potentially damaging transient noise spikes. The principles developed in this report are applicable to other electrically harsh environments such as industrial, motor control, etc.

Advantages of TTL Specified Input Pins

Input levels of the microcontroller, commonly referred to as V_{IL} and V_{IH}, are the voltages required to guarantee that the microcontroller interprets the voltages at the device input pin as a logic one or logic zero. Table 1 illustrates the input thresholds of industry standard microcontrollers.

Table 1. Industry Standard Microcontroller Input Thresholds:

Device	V_{IH}	V_{IL}
TMS370	2.0 V	0.8 V
HC11	0.7 V_{CC}	0.2 V_{CC}
HC05	0.7 V_{CC}	0.2 V_{CC}
80C51	0.2 V_{CC} + 0.9 V	0.2 V_{CC} – 0.1 V
COP888	0.7 V_{CC}	0.2 V_{CC}

As illustrated above, TI's input thresholds are specified at TTL levels while most competitors' devices are typically specified at CMOS voltage levels. The key difference in specification is that CMOS voltage levels have a wider indeterminate region than the TTL levels illustrated in Figure 1. This is vitally important when designing cost effective input conditioning circuitry.

PETITIONER ECOBEE
EX. 1010

Figure 1. Indeterminate Range for TTL and CMOS Input Thresholds (V_{CC} = 5 V)

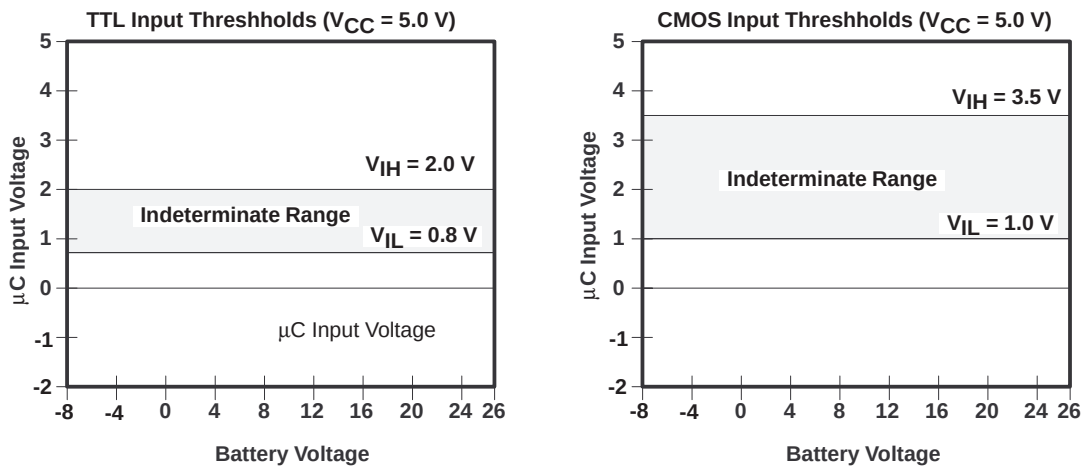

The goal of the automotive system designer is to translate vehicle voltages to a voltage range that the microcontroller can recognize as a logic 1 or logic 0, outside of the indeterminate range, and not exceeding the maximum or minimum input voltage specification of the device. The following two typical conditions should be considered for the automotive environment:

- Switching to battery voltage (V_{bat}) as illustrated by Figure 2
- Switching to battery ground as illustrated by Figure 3

One of the greatest difficulties in designing external input circuitry in both conditions is created by the wide fluctuations in the vehicle battery voltage. The battery may range from 9 to 18 V during normal vehicle run conditions (26 V during double battery conditions). The vehicle ground may range from –2 V to +2 V due to vehicle ground offsets.

Figure 2. Switching to Vehicle Battery (V_{bat})

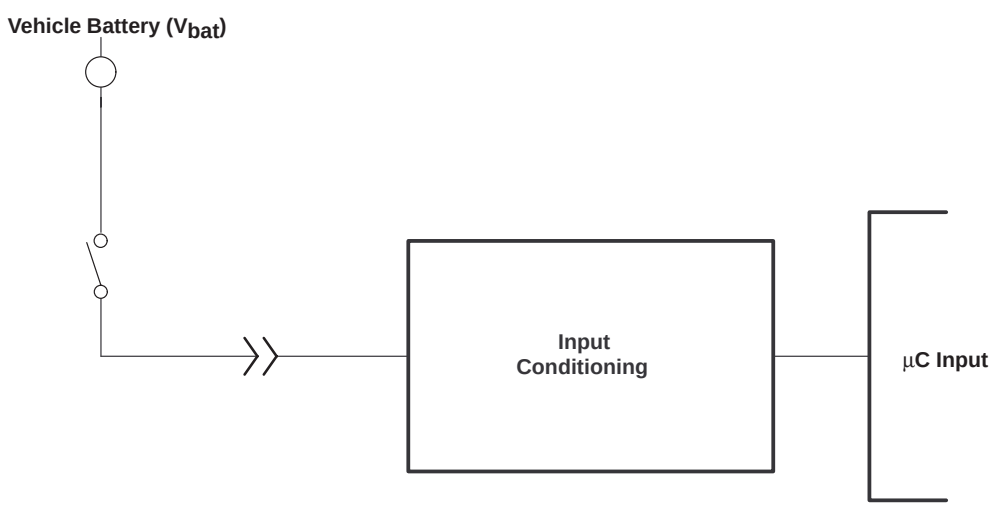

PETITIONER ECOBEE
EX. 1010

Figure 3. Switching to Vehicle Ground

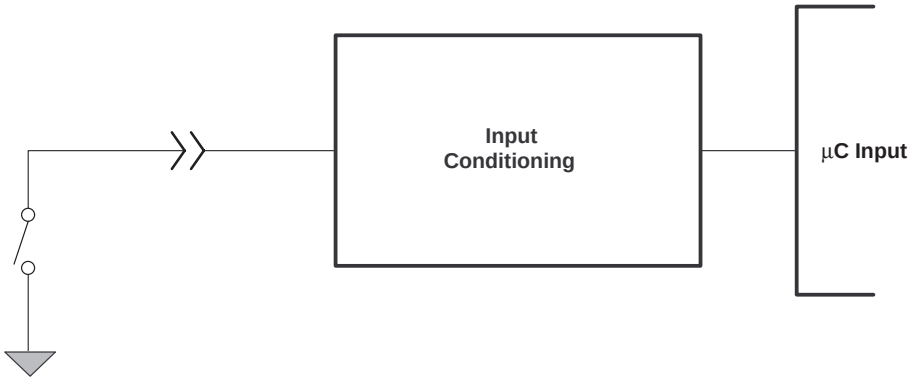

The voltage divider circuit is probably the simplest and most cost effective place to start the design of the input conditioning circuitry. Figure 4 illustrates the function of a simple voltage divider circuit with the TMS370 I/O buffer circuitry.

PETITIONER ECOBEE
EX. 1010

Figure 4. TMS370 Microcontroller Buffer Circuitry With External Voltage Divider Circuitry

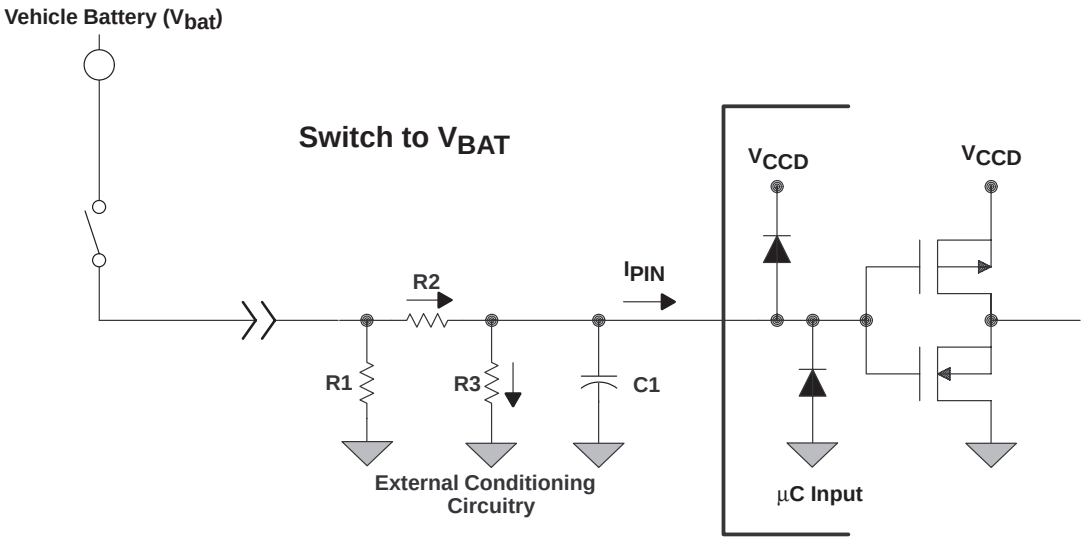

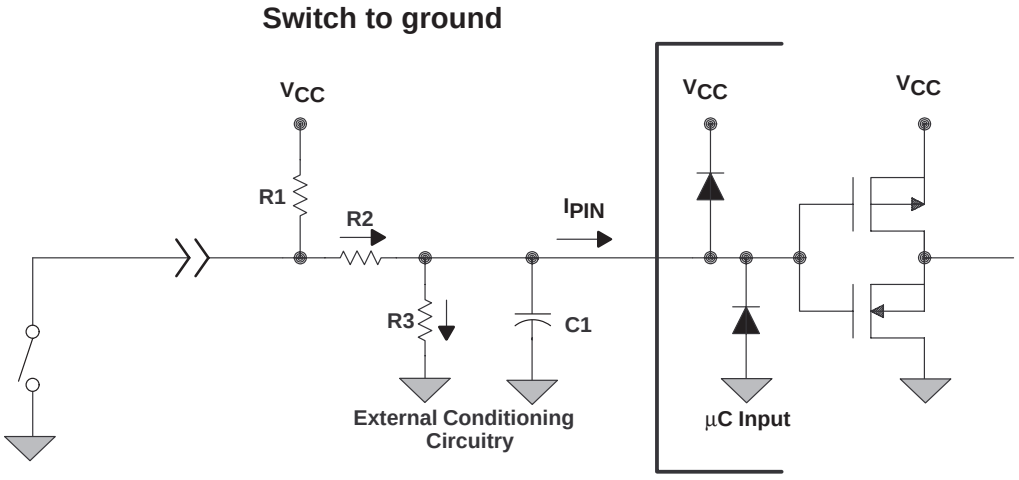

In these figures, resistor R1 holds the input voltage at a known level in an open switch condition. Resistors R2 and R3 make up the resistor divider with the following familiar equation:

$$Input\ Voltage = \frac{R3}{R2 + R3} \times V_{BAT}$$

Capacitor C1 and resistor R2 make up a single pole low pass filter to minimize noise detected by the software and to assist in transient suppression.

PETITIONER ECOBEE
EX. 1010

Designing With Competitors CMOS Specified Level Inputs

Consider the CMOS input levels of most standard microcontrollers. Table 2 illustrates the conditions that the input conditioning circuitry will be exposed to and the requirements it must satisfy.

Table 2. Typical CMOS Parameters and System Conditions

Parameter	Value
Normal battery range (switch to V_{bat} condition)	$9.0\ V \leq V_{IN} \leq 18\ V$
Ground range (switch to gnd condition)	$-2.0\ V \leq V_{IN} \leq 2.0\ V$
V_{CC}	0.5 V+/–10%
Microcontroller V_{IH}	$0.7\ V_{CC}$
Microcontroller V_{IL}	$0.2\ V_{CC}$
Microcontroller absolute maximum input voltage range	7.0 V
Microcontroller absolute minimum input voltage range	–0.6 V

Once the system and microcontroller specifications have been determined, an attempt can be made to find the resistor ratios necessary for the simple voltage divider circuitry that will operate over the entire V_{bat} range. Figure 5 plots the voltages seen at the microcontroller pin versus the battery voltage fluctuations.

Figure 5. CMOS Input Levels Over Variations in V_{bat}

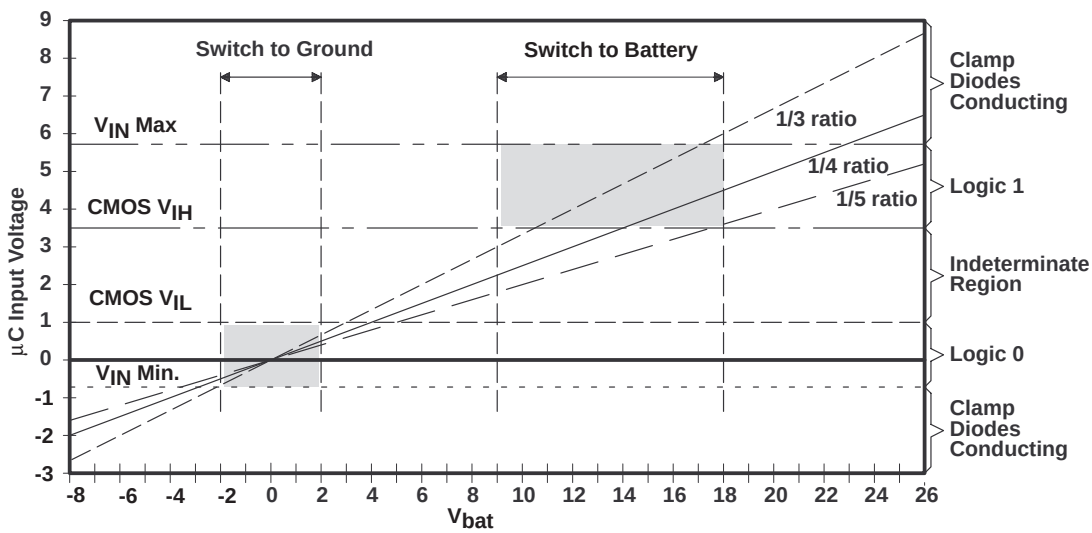

NOTE:

The specifications for maximum and minimum V_{IN} values is device and vendor dependent. These limits are primarily determined by the overvoltage protection circuitry. Each vendor has different protection circuitry and thus different absolute maximum and recommended operating range specifications.

The range between V_{IH} and V_{IL} is the digital indeterminate range. The microcontroller cannot be guaranteed to distinguish a logic 1 from a logic 0 across manufacturing process variations, voltage fluctuations, temperature ranges, etc. The other regions are the voltages that the microcontroller is

PETITIONER ECOBEE
EX. 1010

guaranteed to recognize as a logic 1 or logic 0. Therefore, for all valid voltages that the input conditioning is exposed to (such as 9 V to 18 V for an automotive switch to battery condition), the resistor curves must fall within the logic 1 or logic 0 range to satisfy the design constraints.

A review of Figure 5 shows that all the design considerations cannot be met for CMOS inputs with a simple resistor divider. The switch to battery condition is shown between the two arrows on the right of the figure. Take the 1/4 ratio as an example. Battery voltages between 9 and 14 V violate V_{IH}. The 1/3 ratio has better performance with respect to V_{IH} but battery voltages greater than 17 V and less than 10.5 V still do not meet the required V_{IH} specification. Some type of active circuitry must be designed to satisfy all the design constraints, adding to the total system cost. The switch to ground condition is shown between the two arrows on the left hand side of the figure. The design conditions can be met for a switch to ground with CMOS input levels for all three resistor ratios since V_{IN} falls within V_{IL} and the minimum input voltage of the device.

Designing With TI's TTL Level CMOS Inputs

The advantages of designing with TI's TTL level CMOS inputs are considered next. Table 3 shows the conditions that the input conditioning circuitry are exposed to and the requirements it must satisfy. The design requirements are identical to the previous example, except for the change in V_{IH} and V_{IL}.

Table 3. Typical TTL Parameters and System Conditions

Parameter	Value
Battery Range (switch to V_{bat} condition)	$9.0\ V \leq V_{IN} \leq 18\ V$
Ground Range (switch to ground condition)	$-2.0\ V \leq V_{IN} \leq 2.0\ V$
Vcc	5.0 V ±10%
Microcontroller V_{IH}	2.0 V
Microcontroller V_{IL}	0.8 V
Microcontroller absolute maximum input voltage range	7.0 V
Microcontroller absolute minimum input voltage range	–0.6 V

Figure 6 plots the voltages seen at the microcontroller versus the battery voltage fluctuations with TTL voltage levels. Again, several resistor ratios are plotted and the input voltage ranges of interest are noted to the right of the plot. A review of the figure shows that all the design considerations can be met with a 1/4 ratio for TTL input levels and a simple resistor divider. The switch to battery condition is shown between the two arrows on the right hand side of the figure. The microcontroller input voltage is always greater than V_{IH} and less than the maximum input voltage specification for normal battery voltages between 9 and 18 V.

The switch to ground condition is shown between the two arrows on the left of the figure. Again, the design conditions can be met for a switch to ground with TTL input levels. The microcontroller input voltage for all three resistor ratios fall with in V_{IL} and the minimum input voltage of the device. A component reduction is recognized over the CMOS voltage levels by using a simple resistor divider instead of active circuitry.

PETITIONER ECOBEE
EX. 1010

Figure 6. TTL Input Levels Over Variations in Normal V_{bat}

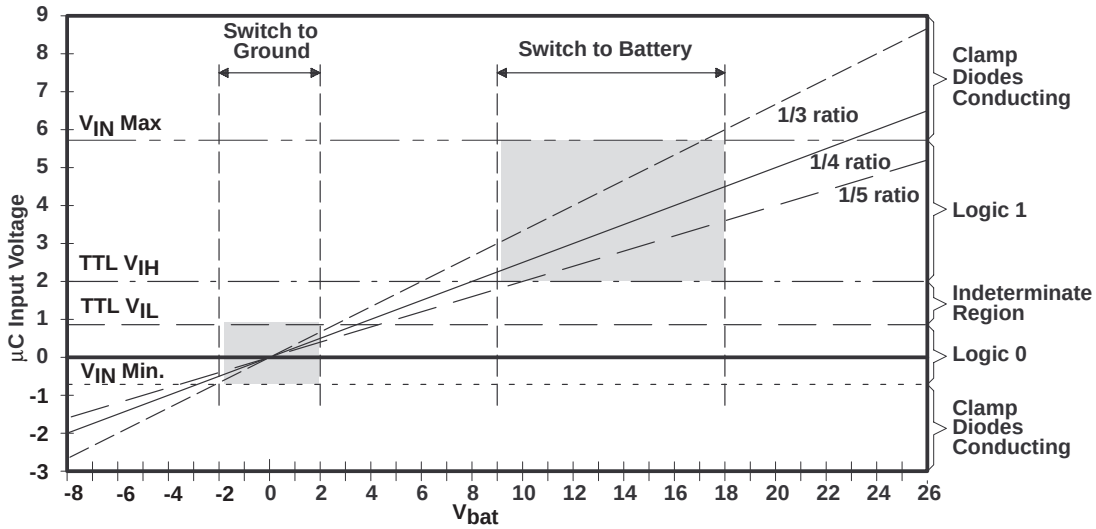

Advantages of Internal Diode Protection Circuitry

The TMS370 family of microcontrollers has been designed with internal diode protection circuitry on all I/O pins. These diode protection circuits coupled with an external current limiting resistor can be used to successfully protect the microcontroller from excessive external high voltage spikes.

Typically, embedded microcontroller systems applications require the use of expensive external protective circuitry due to high voltage noise spikes present in the system. These high voltage spikes can easily exceed the absolute maximum specifications of CMOS microcontrollers. To protect the input pins from these high voltage signals, external suppression circuitry must be implemented. Figure 7 illustrates several common suppression circuitry methods, including the addition of external clamp diodes, zener diodes, buffer circuitry, and others.

PETITIONER ECOBEE
EX. 1010

Figure 7. External Electrical Noise Suppression Circuitry

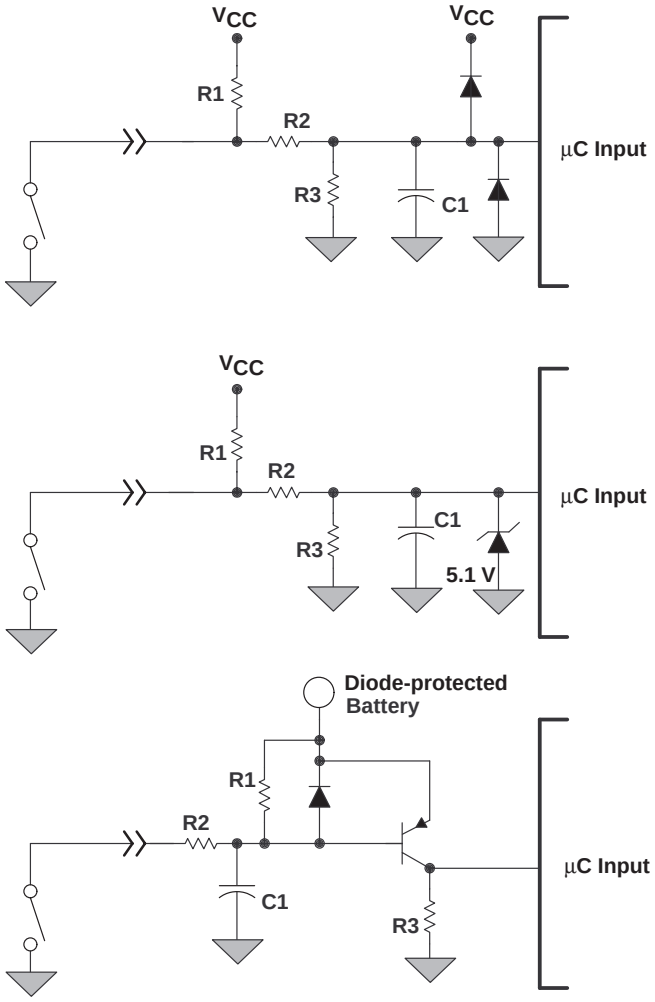

The external noise suppression circuits illustrated in Figure 7 are necessary for over voltage protection. However, the TMS370 microcontroller family has been designed with internal diode protection circuitry. A simple calculation can provide the necessary value for an external current limiting resistor that, coupled with the internal diode protection circuitry, can adequately protect the TMS370 microcontroller from external high voltage spikes. Figure 8 illustrates the alternative low-cost circuitry required to protect TMS370-based microcontroller designs.

PETITIONER ECOBEE
EX. 1010

Figure 8. TMS370 Based External Noise Suppression Circuitry

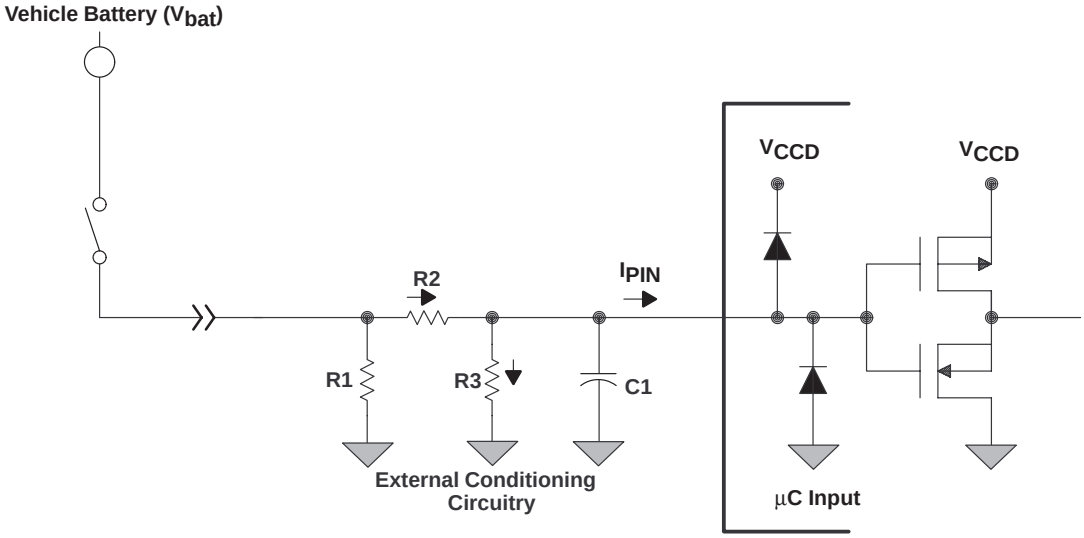

The system cost advantages of designing with the TMS370 family of microcontrollers becomes quite evident when compared to competitive microcontrollers that do not contain internal diode protection circuitry or TTL input levels.

Designing Input Protection Circuitry for TMS370 Microcontrollers

The next step in the cost reduction process is to design the input protection circuitry to meet the criteria for transient suppression and the TTL input thresholds. This section provides an example for selecting the two external resistors (R2 and R3) required for a simple voltage divider protection circuit.

Using the external current limiting resistor (R2), you can limit the voltage and current seen on the I/O pins such that external protection diodes are not needed. There are two absolute maximum specifications that must be considered. These are:

- Input and output clamp current: This specification is equal to ± 20 mA when V_{IN} (or V_{OUT}) is less than V_{SS2} or greater than V_{CCD2}.
- Input voltage range: This specification is equal to a minimum of – 0.6V or a maximum of 7V on all pins except INT1. For INT1, the minimum is – 0.6 V and the maximum is 14 V.

Continuous power dissipation should also be considered when selecting the external circuitry. Continuous power dissipation is dependent on package type and the maximum ambient temperature requirement. The real requirement is that the maximum power consumption of the package not be violated during the transient.

NOTE:
Remember that transient suppression is designed to protect the microcontroller from overvoltage conditions and not for normal operation.

The TMS370 family has gone through several silicon shrinks. These are redesigns that use smaller silicon geometries. The TMS370 has gone through two shrinks commonly referred to as the 80% silicon and the

PETITIONER ECOBEE
EX. 1010

60% silicon. The original TMS370 was a 2-micron process (100%). The 80% shrink is a redesign for a 1.6 micron process. Likewise, the 60% shrink is a redesign for a 1.2 micron process. The 1.2 micron silicon is typically provided for new applications. The internal diode protection circuitry is identical for both 1.2 and 1.6 micron devices. However, the 1.2 micron devices have replaced most fast I/O buffers from the 1.6 micron devices with slow I/O buffers to help reduce EMI emissions.

Device symbolization for the 1.2 micron silicon will either have an A or B at the end of the device name. For example, the device name TMS370C056A indicates a 1.2 micron silicon design. Device symbolization for the 1.6 micron silicon will not have either letter. For example, the device name TMS370C056 would indicate a 1.6 micron silicon design. Table 4 illustrates the different types of I/O pin buffer circuits used on TMS370 microcontrollers.

Table 4. TMS370 Microcontroller I/O Pin Buffer Types

I/O Pin Type	TMS370 Pins (1.2 Micron Design)	TMS370 Pins (1.6 Micron Design)
Fast Input	INT1	INT1
Analog Input	AN0 – AN14	AN0 – AN14
Slow I/O	All Others	$\overline{\text{RESET}}$, D3, D6
Fast I/O	D3/CLKOUT	All others

Figure 9 illustrates the effective equivalent I/O pin buffer circuitry for both 1.2 micron and 1.6 micron silicon.

PETITIONER ECOBEE
EX. 1010

Figure 9. TMS370 Simplified 1.2 Micron and 1.6 Micron Silicon Buffer Circuitry

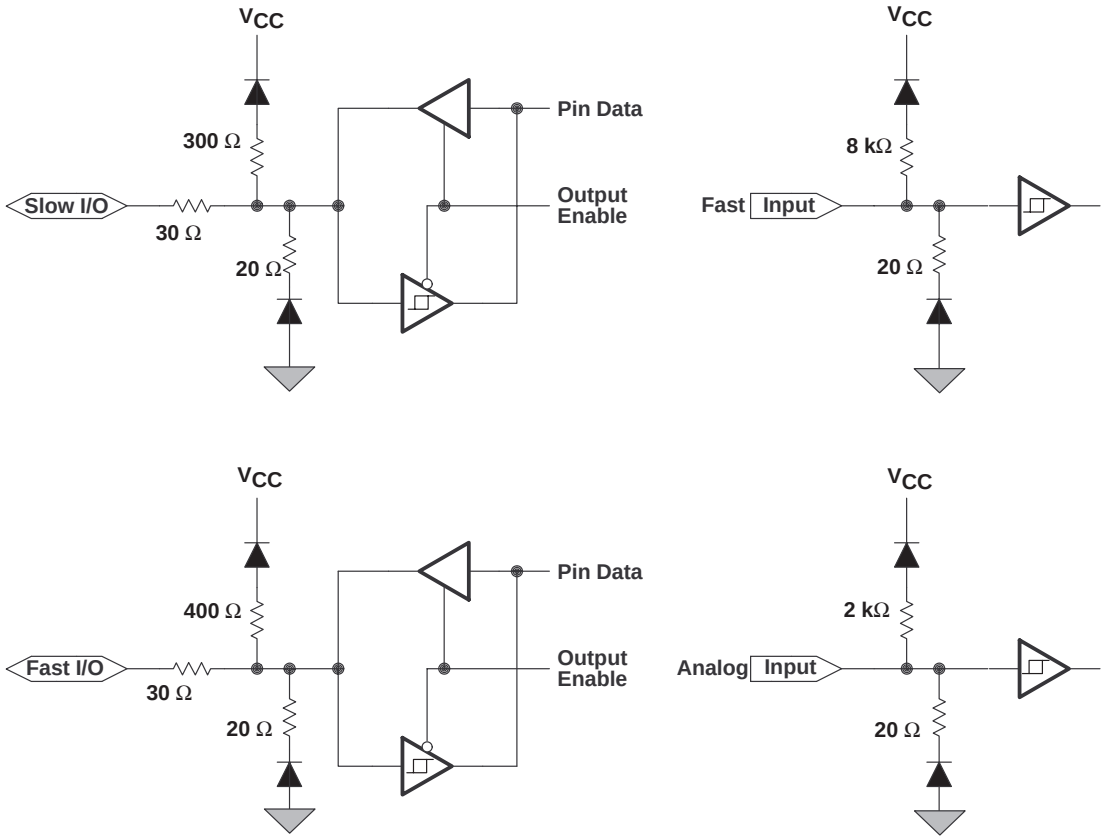

The current limiting resistance is not simply a matter of selecting a value that limits the clamp current to ±20 mA. The external current limiting values need to be selected while keeping in mind the resistive characteristics of the internal protection circuitry. The goal is to limit the absolute maximum clamp current to less than ±20 mA, and at the same time limit the absolute maximum voltage to 7 V (14 V for INT1). With this in mind, the following example illustrates how to calculate the external current limiting resistor (R2) value necessary to adequately protect the TMS370 microcontroller family. Let's look at an example.

Calculation of External Current Limiting Resistor Value Example

Question: What minimum external resistance value (R2) is needed on the AN0 pin to prevent damage to the TMS370 device during transient voltage spikes of ±150 V?

Conditions: Limit the absolute maximum voltage on AN0 to between – 0.6 V and 7 V and the absolute maximum input clamp current to ±20 mA. (Both conditions must be taken into account) Also, note that the resistance characteristics of the negative voltage protection diode circuitry is much smaller than the positive voltage protection diode circuitry. In this case, the example illustrates solving for both the positive and negative absolute maximum conditions.

I/O pin resistive characteristic value: The AN0 pin (analog input) has a resistive characteristic value of 2,000 Ω.

PETITIONER ECOBEE
EX. 1010

Solving for R2 to protect against a positive (+ 150 V) voltage spike:

GIVEN:	V_{IN}	=	+ 150 V
	V_{CCD}	=	5.5 V (Worst case for this example. A value of 4.5 V would allow a larger voltage drop across the internal resistance)
	V_{PAD}	=	7.0 V (Absolute maximum value)
Solve for V_{RINT}:	V_{RINT}	=	$V_{PAD} - V_{CCD}$
		=	7.0 V – 5.5 V
		=	1.5 V
Solve for I_{RINT}:	I_{RINT}	=	V_{RINT} / R_{INT}
		=	1.5 V / 2,000 Ω
		=	750 µA
Solve for R2:	R2	=	$V_{IN} - V_{PAD} / I_{RINT}$
		=	150 V – 7 V / 750 µA
		=	143 V / 750 µA
		=	190.667 KΩ minimum

Solving for R2 to protect against a negative (–150 V) voltage spike:

GIVEN:	V_{IN}	=	– 150 V
	V_{SSD2}	=	0 V
	V_{PAD}	=	– 0.6 V (Absolute Maximum value)
Solve for V_{RINT}:	V_{RINT}	=	$V_{SSD} - V_{PAD}$
		=	0 V – (–0.6 V)
		=	0.6 V
Solve for I_{RINT}:	I_{RINT}	=	V_{RINT} / R_{INT}
		=	0.6 V / 20 Ω
		=	30 mA max.

Since 30 mA exceeds the absolute maximum clamp current of 20 mA, the following equation will substitute the lower value of 20 mA.

Solve for R2:	R2	=	$V_{PAD} - V_{IN} / I_{RINT}$
		=	(–0.6 V) – (–150 V)/ 20 mA
		=	149.4 V / 20 mA
		=	7.47 kΩ minimum

Since the minimum external resistance (R2) is larger for the positive external voltage spike, select a value of ~191 k or greater for R2.

Now that R2 has been determined, calculate a value for R3. The first section of this document described the TTL inputs and the necessity that the resistor ratio between R2 and R3 be 1/4. Use this relationship to calculate R3.

PETITIONER ECOBEE
EX. 1010

$$\frac{1}{4} = \frac{R3}{(R3 + R2)}$$

$$R3 = R2$$

$$R3 = 191\ k\Omega\ /\ 3$$

$$R3 = \sim\ 64\ k\Omega$$

The TMS370 can withstand voltage transients and interpret vehicle battery variations as logic 1s or logic 0s using a simple voltage divider. The series current limiting resistor (R2) limits the voltage and current seen on the I/O pins such that the internal diode protection circuitry can withstand the defined system transients. The addition of one additional pull down resistor (R3) creates a divider circuit with R2 and additional circuitry is not required to convert the vehicle battery levels to voltage levels recognizable by the microcontroller inputs.

Table 5 provides a quick reference for the types of I/O pins that are available on both the 1.2-micron and 1.6-micron devices as well as a matrix to help select the minimum external resistance (R2) necessary assuming an external ±150 V transient condition.

Table 5. Typical Values of R2 Required for 1.2 and 1.6 Micron Silicon Assuming an External ±150V Spike

I/O Pin Type	TMS370 Pins (1.2 Micron Design)	TMS370 Pins (1.6 Micron Design)	Minimum R2 (Theoretical)
Fast Input	INT1	INT1	128 kΩ†
Analog Input	AN0 – AN14	AN0 – AN14	191 kΩ
Slow I/O	All Others	Reset, D3, D6	29 kΩ
Fast I/O	D3/CLKOUT	All others	39 kΩ

† The absolute maximum V_{IN} value for the INT1 pin is 14 V.

PETITIONER ECOBEE
EX. 1010

Figure 10. External Resistance (R2) Values for Various External Transient Voltage Conditions

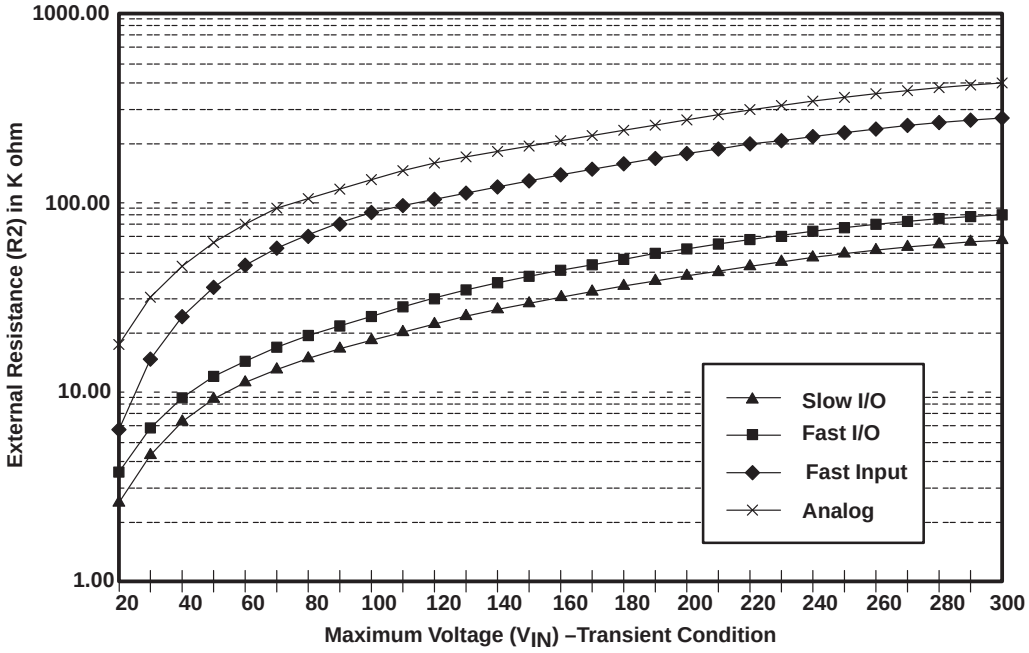

The values for R2 above coupled with the calculated value for R3 (1/4 ratio) satisfy the protection requirements for the TMS370 microcontroller input. They limit voltage and current seen on the microcontroller I/O pins and ensure that TTL voltages thresholds are not violated across all normal operating voltages. A much more detailed analysis can be done for a specific transient specification. Since most transients are ac in nature, the low-pass filter can be designed to ensure that a voltage transient with some frequency content will be attenuated.

The values calculated for R2 and R3 should be considered minimum values. Increasing the value of R2 and R3 yields the following benefits:

- Power consumption of the microcontroller is reduced during a transient event. The quiescent current of the system is reduced.
- A greater R2 enables a lower value of C1 for an equivalent low pass filter. Typically, lower capacitance values are less expensive.

NOTE:
The value of R2 has a direct effect on the A/D converter when used to limit current on analog input pins. There is a minimum sample time of 1 µs per 1 kΩ of source impedance. The system designer has to determine the appropriate value to meet system requirements.

Cost Analysis

This report establishes that Texas Instruments TMS370 microcontroller family devices input circuitry is more robust than competitors' input circuitry, and allows system designers to simplify their external

PETITIONER ECOBEE
EX. 1010

conditioning circuitry. The ultimate goal and the reason for this analysis is to minimize cost at the system level. The following section establishes the substantial system level cost savings associated with robust input circuitry.

Several typical input conditioning circuits are shown in Figure 11. This is by no means an exhaustive list, but it provides a basis for cost comparison between different types of input circuits. Figure 11 illustrates the simple resistor divider input conditioning circuit for Texas Instruments TMS370 family TTL inputs, as well as other external protection circuits such as external diodes, external zener, transistor level shifter, and a buffered hex-inverter used as a level shifter.

PETITIONER ECOBEE
EX. 1010

Figure 11. Examples of External Protection Circuitry

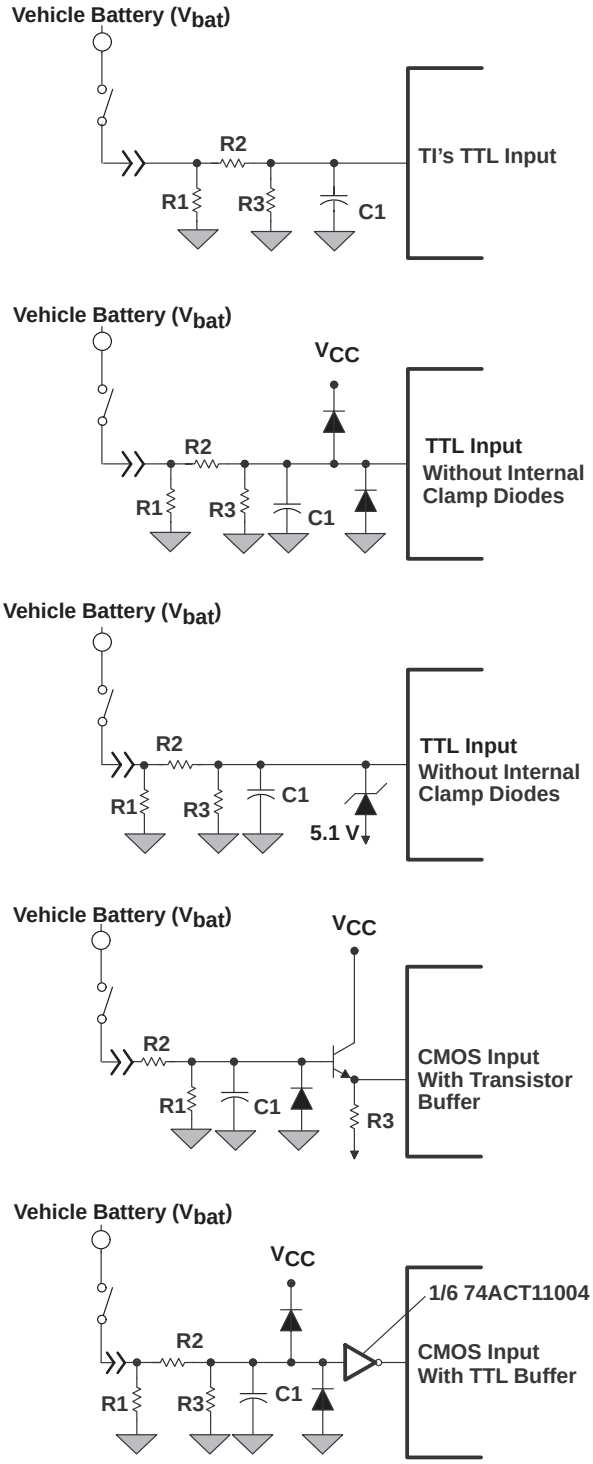

PETITIONER ECOBEE
EX. 1010

Table 6 is a cost comparison among the five implementations shown in figure 11. The following component cost assumptions in the table below are used for comparison purposes only.

- Resistor $.01
- Capacitor $.02
- Signal diode $.04
  (assume dual SOT23)
- Zener diode $.05
- Small signal transistor $.05
- Hex inverter (74ACT11004) $.05
  (assume 1/6 total cost of device and decoupling caps)

Table 6. Cost Comparison

Component	TI's TTL input	TTL Input Diode Protection	TTL Input Zener Protection	CMOS Transistor Buffer	CMOS TTL Buffer
R1	.01	.01	.01	.01	.01
R2	.01	.01	.01	.01	.01
R3	.01	.01	.01	.01	.01
C1	.03	.03	.03	.03	.03
D1	N/A	.04	N/A	.04	.04
Zener	N/A	N/A	.05	N/A	N/A
Q1	N/A	N/A	N/A	.05	N/A
1/6 74ACT11004	N/A	N/A	N/A	N/A	.05
Totals	$.06	$.10	$.11	$.15	$.15

The totals shown at the bottom of Table 6 indicate that the simple resistor divider circuit used to condition Texas Instruments TTL inputs is the least expensive. Texas Instruments input only requires four components while the other conditioning circuitry requires between five and six components. There are extra costs with more components, such as manufacturing cost (costs to insert extra parts), inventory costs, board space, test time, etc. These costs are not reflected in the example above.

Conclusion

TTL input thresholds simplify the external circuitry required to ensure that the microcontroller recognizes logic 1 and 0 input voltages across all valid vehicle voltages. There is a cost savings over the CMOS voltage levels by using a simple resistor divider instead of active circuitry. Likewise, Texas Instruments TMS370 family of microcontrollers allows system designers to use the internal diode protection circuits to withstand voltage transients with a simple resistor divider. The ability to use the internal diode protection circuits instead of active components automatically reduces part count, perhaps board layout, complexity, and ultimately, cost.

PETITIONER ECOBEE
EX. 1010

References

1. Texas Instruments,*TMS370 Family Data Manual*, pg. 16–18, 1993
2. Motorola Corp., *MC68HC11E9 Data Sheet*, Appendix A, pg. 2, April 1992
3. Motorola Corp., *80C51 Data Sheet*, pg. 13–3, March 1992
4. Phillips Semiconductor Corp., *80C51 Data Sheet*, pg. 142, Jan 26, 1993
5. National Semiconductor Corp., *COP888CF Data Manual*, pg. 7, May, 1992
6. TI, *Advanced CMOS Logic*, 1988
7. TI, *High Speed CMOS Logic*, 1989

PETITIONER ECOBEE
EX. 1010