IN THE UNITED STATES PATENT AND TRADEMARK OFFICE

In re Patent of:	Angus Pacala et al.	
U.S. Patent No.:	11,178,381	Attorney Docket No.: 56432-0093IP2
Issue Date:	November 16, 2021	
Appl. Serial No.:	17,323,962	
Filing Date:	May 18, 2021	
Title:	OPTICAL SYSTEM FOR COLLECTING DISTANCE INFORMATION WITHIN A FIELD	

Mail Stop Patent Board
Patent Trial and Appeal Board
U.S. Patent and Trademark Office
P.O. Box 1450
Alexandria, VA 22313-1450

PETITION FOR *INTER PARTES* REVIEW OF UNITED STATES PATENT NO. 11,178,381 PURSUANT TO 35 U.S.C. §§ 311–319, 37 C.F.R. § 42

TABLE OF CONTENTS

I. REQUIREMENTS FOR IPR UNDER 37 C.F.R. § 42.104 1
- **A.** Standing—37 C.F.R. § 42.104(a) 1
- **B.** Challenge and Relief Requested—37 C.F.R. § 42.104(b) 1
- **C.** Level of Ordinary Skill in the Art 3
- **D.** Claim Construction under 37 C.F.R. §§ 42.104(b)(3) 3

II. THE '381 PATENT 4
- **A.** Technology Background 4
- **B.** Brief Description of the '381 Patent 7
- **C.** Summary of the Prosecution History 9

III. DETAILED EXPLANATION OF GROUNDS 9
- **A.** GROUND 1A: Claims 1-3, 6-8, 10, 11, 14-17 are obvious based on Retterath and Borowski 9
  - 1. Retterath 9
  - 2. Borowski 12
  - 3. Predictable Retterath-Borowski combination 13
  - 4. Application to Challenged Claims 19
- **B.** GROUND 1B – Claims 6-8, 17 are obvious based on Retterath in view of Borowski and Hipp 38
  - 1. Overview of Hipp 38
  - 2. Predictable Retterath-Borowski-Hipp combination 39
  - 3. Application to Challenged Claims 42
- **C.** GROUND 1C: Claims 1-3, 5-8, 10-13 are obvious based on Retterath, Borowski, and Pacala 43
  - 1. Pacala 43
  - 2. Predictable Retterath-Borowski-Pacala Combination 44
  - 3. Application to Challenged Claims 46
- **D.** GROUND 1D: Claims 1-3, 6-8, and 10-17 are obvious based on Retterath in view of Borowski and Weimer 48
  - 1. Weimer 49
  - 2. Predictable Retterath-Borowski-Weimer combination 50
  - 3. Application to Challenged Claims 52
- **E.** Ground 1E: Retterath, Borowski, Weimer, and Pacala Render Obvious Claims 1-3, 5-8, and 10-13 54
- **F.** Ground 1F: Retterath, Borowski, Weimer, and Hipp Render Obvious Claims 6-8, 17 55
- **G.** Ground 1G: Retterath, Borowski, Weimer, Hipp, and Pacala Render Obvious Claims 6-8, 17 55

H. GROUND 2A – Claims 1-3, 10-16 are obvious based on Imai and Higashi 55
1. Imai 55
2. Higashi 57
3. Predictable Imai-Higashi Combination 58
4. Application to Challenged Claims 62

I. GROUND 2B – Claims 6-8, and 17 are obvious based on Imai in view of Higashi and Grzesik 76
1. Overview of Grzesik 76
2. Predictable Imai-Higashi-Grzesik combination 77
3. Application to the challenged claims 79

J. GROUND 2C – Claim 5 is obvious based on Imai in view of Higashi and Pacala 80
1. Predictable Imai-Higashi-Pacala Combination 80
2. Application to Challenged Claims 82

IV. DISCRETIONARY DENIAL IS NOT WARRANTED 83
A. The *Fintiv* Factors Weigh in Favor of Institution - 35 U.S.C. § 314 83
B. 35 U.S.C. § 325(d) 83

V. CONCLUSION 85

VI. MANDATORY NOTICES UNDER 37 C.F.R § 42.8(a)(1) 85
A. Real Party-In-Interest Under 37 C.F.R. § 42.8(b)(1) 85
B. Related Matters Under 37 C.F.R. § 42.8(b)(2) 85
C. Lead And Back-Up Counsel Under 37 C.F.R. § 42.8(b)(3) 85
D. Service Information 86

VII. PAYMENT OF FEES – 37 C.F.R. § 42.103 86

EXHIBITS

EX1001	U.S. Patent No. 11,178,381 to Pacala et al. ("the '381 patent")
EX1002	Excerpts from the Prosecution History of the '381 Patent ("the Prosecution History")
EX1003	Declaration of Dr. James Shanley
EX1004	Curriculum Vitae of Dr. James Shanley
EX1005	U.S. Patent No. 10,203,399 to Retterath et al ("Retterath")
EX1006	U.S. Patent App. Pub. No. US 2013/0300838 to Borowski ("Borowski")
EX1007	U.S. Patent No. 7,787,105 to Hipp et al ("Hipp")
EX1008	U.S. Patent No. 8,736,818 to Weimer et al ("Weimer")
EX1009	U.S. Patent App. Pub. No. 2016/0274223 ("Imai")
EX1010	JP Publication No. JP 2015-078953 ("Higashi")
EX1011	Certified English Translation of JP Publication No. JP 2015-078953 ("Higashi")
EX1012	U.S. Patent App. Pub. No. US 2017/0040368 ("Grzesik")
EX1013	U.S. Patent App. Pub. No. 2014/0211194 ("Pacala")
EX1014	Lee *et al.*, "Accuracy-Power Controllable LiDAR Sensor System with 3D Object Recognition for Autonomous Vehicle," in *Sensors*, Vol. 20, Iss. 19 (Oct. 2020)
EX1015	ITC Inv. No. 337-TA-1363, Certain Lidar (Light Detection and Ranging) Systems And Components Thereof, EDIS Document

EX1016	U.S. Patent No. 9,651,658 ("Pennecot")
EX1017	U.S. Patent No. 7,544,945 ("Tan")
EX1018	U.S. Patent No. 6,747,747 ("Hipp-747")
EX1019	Marino *et al.*, *A compact 3D imaging laser radar system using Geiger-mode APD arrays: system and measurements*, MIT Lincoln Lab (2003)
EX1020	Complaint in ITC Inv. No. 337-TA-1363
EX1021	Complaint in *Ouster, Inc. v. Hesai Group et al*, No. 23-cv-00406 (D. Del.)
EX1022	Order Granting Stay in *Ouster, Inc. v. Hesai Group et al.*, No. 23-cv-00406 (D. Del.)
EX1023	Matsubara et al., *Development of Next Generation LiDAR*, R&D Review of Toyota CRDL (2012)
EX1024	U.S. Patent No. 7,969,558 ("Hall")
EX1025	U.S. Patent No. 10,199,801 ("Li")
EX1026	Joint Claim Construction Chart from ITC Inv. No. 337-TA-1363
EX1027	Certified English Translation of JP 2015-055314 ("Imai Priority")
EX1028	U.S. Patent Pub. No. 2016/0327639 ("Albert")
EX1029	PCT Pub. No. WO2017/004663 ("Delic")
EX1030	German Pat No. DE 10 2004 014 041 B4 ("Spies-041")

EX1031	Certified English Translation of DE 10 2004 014 041 B4 ("Spies-041")
EX1032	German Pat. No. DE 101 53 977 B4 ("Spies-977")
EX1033	Certified English Translation of DE 101 53 977 B4 ("Spies-977")
EX1034	Donati, Silvano, Photodetectors: Devices, Circuits and Applications, Chapter 6, 2d Ed., The Institute of Electrical and Electronics Engineers, Inc. (2021, John Wiley & Sons, Inc.)
EX1035	*Performance Analysis of Next-Generation LADAR for Manufacturing, Construction, and Mobility*, National Institute of Standards and Technology (2004)
EX1036	U.S. Patent No. 8,742,325 ("Droz")
EX1037	*Report to Congress: DARPA Prize Authority* (2006)
EX1038	Hall et al., *Team DAD Technical Paper*, DARPA Grand Challenge (2005)
EX1039	McManamon, *Field Guide to LiDAR*, SPIE Field Guides, Vol. FG36 (2015)

CLAIM LISTING

The challenged claims in this proceeding are claims 1-3, 5-8, and 10-17, reproduced below:

Claim 1	
1(a)	An optical system for collecting distance information, the optical system comprising:
1(b)	a bulk transmitting optic;
1(c)	a plurality of optical emitters arranged behind the bulk transmitting optic and configured to output electromagnetic radiation of an operating wavelength through the bulk transmitting optic into a field external to the optical system according to an illumination pattern that comprises a plurality of non-overlapping emission regions;
1(d)	a bulk imaging optic disposed adjacent to the bulk transmitting optic;
1(e)	a plurality of pixels arranged behind the bulk imaging optic, wherein each pixel in the plurality of pixels has a field of view coincident with an emission region of a corresponding optical emitter in the plurality of optical emitters and each pixel comprises a plurality of single photon avalanche diodes (SPADs) operable to detect photons emitted from its corresponding optical emitter and received through the bulk imaging optic after being reflected from surfaces within the field; and
1(f)	an optical filter disposed in an optical path of the plurality of pixels, the optical filter configured to allow a set of wavelengths of electromagnetic radiation, including the operating wavelength, to pass through the optical filter while blocking electromagnetic radiation outside the set of wavelengths from reaching the plurality of pixels.
Claim 2	
2	The optical system according to claim 1 wherein, the optical system is configured to collect three-dimensional distance data based on times between transmission of illuminating beams from the plurality of optical emitters and detection of photons from the illuminating beams by the plurality of pixels.
Claim 3	

3	The optical system according to claim 1 wherein the plurality of optical emitters are arranged in a first arrangement and the plurality of pixels are arranged in a second arrangement, proportional to the first arrangement.
Claim 5	
5	The optical system according to claim 1 further comprising a rotation mechanism configured to rotate the optical system about a rotational axis.
Claim 6	
6	The optical system according to claim 1 further comprising an aperture layer disposed between the bulk imaging optic and the plurality of pixels and comprising a plurality of apertures separated by a stop region.
Claim 7	
7	The optical system according to claim 6 wherein the aperture layer comprises a thin opaque structure.
Claim 8	
8	The optical system according to claim 6 wherein: the plurality of apertures comprises a first aperture, a second aperture, a third aperture, and a fourth aperture; the plurality of pixels comprises a first pixel, a second pixel, a third pixel and a fourth pixel; and the optical system includes a first optical path that extends between the bulk imaging optic and the first pixel through the first aperture, a second optical path that extends between the bulk imaging optic and the second pixel through the second aperture, a third optical path that extends between the bulk imaging optic and the third pixel through the third aperture, and a fourth optical path that extends between the bulk imaging optic and the fourth pixel through the fourth aperture.
Claim 10	
10	The optical system according to claim 1 further comprising a signal processing circuit coupled to the plurality of pixels.
Claim 11	
11	The optical system according to claim 10 wherein the signal processing circuit is configured to count incident photons within a sampling period for the plurality of pixel detectors.
Claim 12	

12	The optical system according to claim 1 wherein the plurality of optical emitters comprises a plurality of vertical-cavity surface-emitting lasers (VCSELs) mounted on a common substrate.
Claim 13	
13	The optical system according to claim 1 wherein each optical emitter in the plurality of optical emitters comprises a single vertical-cavity surface-emitting lasers (VCSEL).
Claim 14	
14(a)	An optical system for collecting distance information, the optical system comprising:
14(b)	a bulk transmitting optic;
14(c)	a plurality of optical emitters arranged behind the bulk transmitting optic and configured to output electromagnetic radiation of an operating wavelength into a plurality of non-overlapping emission regions, each emission region representing a spot in a field ahead of the optical system;
14(d)	a bulk imaging optic;
14(e)	a plurality of pixels arranged behind the bulk imaging optic and corresponding in number to the plurality of optical emitters, wherein each pixel in the plurality of pixels is paired with a different optical emitter in the plurality of optical emitters and has a field of view coincident with an emission region of its paired optical emitter and wherein each pixel comprises a plurality of single photon avalanche diodes (SPADs) operable to detect photons emitted from its paired optical emitter and received through the bulk imaging optic after being reflected from surfaces within the field; and
14(f)	an optical filter disposed in an optical path of the plurality of pixels, the optical filter configured to allow a set of wavelengths of electromagnetic radiation, including the operating wavelength, to pass through the optical filter while blocking electromagnetic radiation outside the set of wavelengths from reaching the plurality of pixels;
14(g)	wherein, the optical system is configured to collect distance data based on times between transmission of beams of electromagnetic radiation from the plurality of optical emitters and detection of photons from the beams by the plurality of pixels.
Claim 15	

15	The optical system according to claim 14 wherein the plurality of optical emitters are configured to illuminate substantially only emission regions in the field that can be detected by the plurality of pixels in the optical system.
Claim 16	
16	The optical system according to claim 14 wherein each pixel is operable to output a signal corresponding to a count of photons incident on the pixel within one sampling period.
Claim 17	
17	The optical system according to claim 14 further comprising an aperture layer disposed between the bulk imaging optic and the plurality of pixels and comprising a plurality of apertures separated by a stop region.

Hesai Technology Co. Ltd. ("Petitioner" or "Hesai") petitions for Inter Partes Review ("IPR") of claims 1-3, 5-8, and 10-17 ("the Challenged Claims") of U.S. Patent No. 11,178,381 ("the '381 patent").

I. REQUIREMENTS FOR IPR UNDER 37 C.F.R. § 42.104

A. Standing—37 C.F.R. § 42.104(a)

Petitioner certifies that the '381 Patent is available for IPR and Petitioner is not barred or estopped from requesting IPR. The present petition is being filed within one year of service of complaints against Petitioner in *Ouster, Inc. v. Hesai Group et al*, No. 23-cv-00406 (D. Del.) and *Certain LiDAR (Light Detection and Ranging) Systems and Components Thereof*, Inv. No. 337-TA-1363 (USITC).[1] The litigation in the District of Delaware is currently stayed. *See* EX1022. Also, the ITC investigation was terminated in its infancy. EX1015.

B. Challenge and Relief Requested—37 C.F.R. § 42.104(b)

Petitioner requests an IPR of Challenged Claims on grounds listed below. A declaration of Dr. Shanley (EX1003) supports this Petition.

Ground	Claims	§103 Grounds
1A	1-3, 6-8, 10, 11, 14-17	Retterath, Borowski
1B	6-8, 17	Retterath-Borowski-Hipp
1C	1-3, 5-8, 10-13	Retterath-Borowski-Pacala
1D	1-3, 6-8, 10-17	Retterath-Borowski-Weimer

[1] Service was effectuated no sooner than May 4, 2023.

Ground	Claims	§103 Grounds
1E	1-3, 5-8, 10-13	Retterath-Borowski-Weimer-Pacala
1F	6-8, 17	Retterath-Borowski-Weimer-Hipp
1G	6-8, 17	Retterath-Borowski-Weimer-Hipp-Pacala
2A	1-3, 10-16	Imai-Higashi
2B	6-8, 17	Imai-Higashi-Grzesik
2C	5	Imai-Higashi-Pacala

Each reference pre-dates the filing of Provisional Application No. 62/232,222 on September 24, 2015 ("Critical Date"), which is the earliest filed application from which the '381 Patent claims priority. The applied references qualify as prior art under §102 as shown below:

Reference	Date	Section
Retterath	11/12/2013 (filed)	102(a)(2)
Borowski	11/14/2013 (published)	102(a)(1)
Hipp	8/31/2010 (issued)	102(a)(1)
Weimer	5/27/2014 (published)	102(a)(1)
Imai	3/18/2015 (priority)	102(a)(2)
Higashi	4/23/2015 (published)	102(a)(1)
Grzesik	4/14/2015 (filed)	102(a)(2)
Pacala	7/31/2014 (published)	102(a)(1)

Higashi (EX1011) is a certified English translation of JP2015-078953, and is cited throughout the petition to identify relevant aspects of Higashi (EX1010).

Imai (EX1009) claims priority to JP2015-055314 (EX1027) filed on March

18, 2015, which fully supports the teachings in Imai, including the identical drawings and depicted structures. As such, Imai qualifies as prior art under §102(a)(2). To further confirm JP2015-055314 supports Imai's teaching, EX1027 is cited throughout this Petition when citing to Imai (EX1009). Additionally, the evidence here confirms that JP2015-055314 also provides support for Imai's claim 1 such that Imai is entitled to the March 18, 2015 priority date. *See* EX1003, ¶116 (citing to EX1027 at Cl. 1, [0001] ("object detecting device"), [0004] ("light source", "photodetector"), [0013] ("deflector"), and [0042] ("light receiving units arranged in the sub-scanning direction").

None of these references were applied in any claim rejection in any office action during prosecution. *See* EX1002, 454-461; 504-510.

C. Level of Ordinary Skill in the Art

The evidence here confirms that a person of ordinary skill in the art at the time of the Critical Date of the '381 patent (a "POSITA") would have had an undergraduate degree in mechanical or electrical engineering or physics, plus 2-3 years of experience in LiDAR design. EX1003, ¶72-77.

D. Claim Construction under 37 C.F.R. §§ 42.104(b)(3)

For purposes of this proceeding, the challenged claims should receive their ordinary and customary meaning. *Phillips v. AWH Corp.*, 415 F.3d 1303 (Fed. Cir.

2005); 37 C.F.R. § 42.100; EX1003, ¶¶78-79. In the now-terminated ITC case, Petitioner and Patent Owner exchanged "preliminary" claim constructions for some terms before that proceeding ended. *See* EX1020; EX1021. In this IPR, given the remarkable overlap between the preferred embodiment of the '381 patent and the prior art combinations articulated in Grounds 1A-2C, the prior art renders the challenged claims obvious under the constructions advanced by both parties. Accordingly, no formal claim constructions are necessary in this proceeding because "claim terms need only be construed to the extent necessary to resolve the controversy." *Wellman, Inc. v. Eastman Chem. Co.*, 642 F.3d 1355, 1361 (Fed. Cir. 2011).

II. THE '381 PATENT

A. Technology Background

The concept of using lasers to detect objects and measure distance dates back to the 1930s. EX1003, ¶¶27-39. The basic components of a LiDAR system are photon emitters (*e.g.*, lasers), photon detectors (*e.g.*, photodiodes), circuitry to fire the emitters and process signals generated by the detectors, and optical components (*e.g.*, lenses and/or mirrors) to route photons from the emitters, to the surrounding environment, back to the detectors. *Id.* Long before 2015, it was known that multiple distance measurements would be processed and combined to result in a three-dimensional map of the surrounding environment, also known as a "point

cloud":

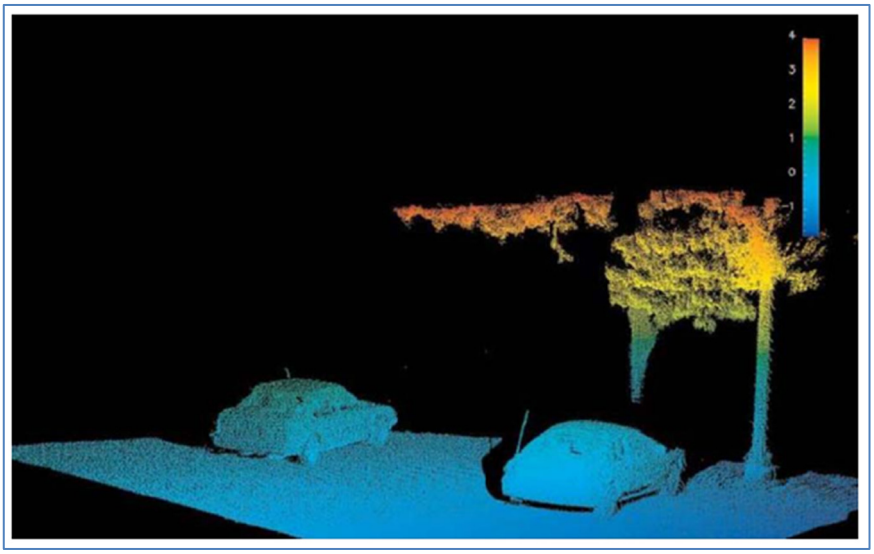

EX1003, ¶¶40. Similarly, long before 2015, those in the field recognized that a more detailed map of the environment could be achieved by using multiple emitter-detector pairs and moving or rotating the device to scan a larger area:

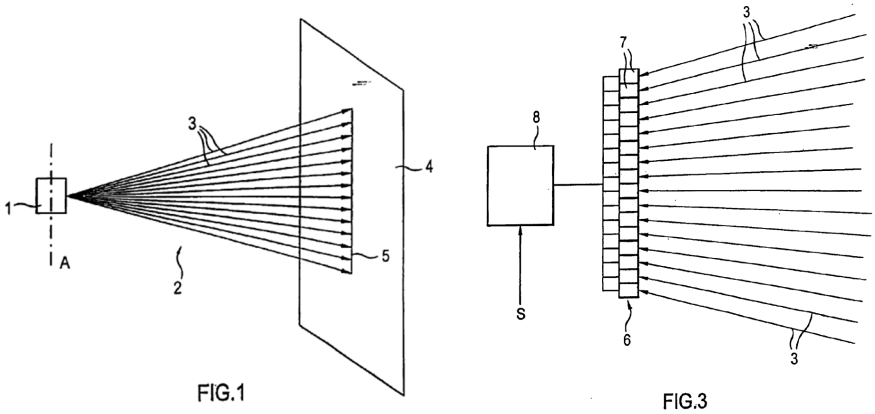

EX1003, ¶¶41-43; *see also* EX1014, FIG. 2.

For example, in 2005, a company called Velodyne Acoustics implemented these same techniques in a LiDAR device for autonomous-vehicle navigation. EX1003, ¶¶34-37 (citing EX1037-38). Velodyne commercialized its first LiDAR

device as the HDL-64E, images of which are shown below:

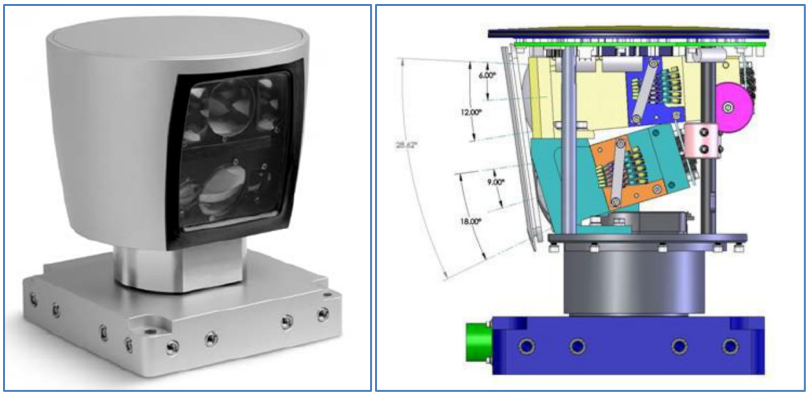

EX1003, ¶35. Other devices incorporated these known design principles before 2015. *E.g.,* EX1005, FIGS. 4 and 8, 9:53-10:31, 10:40-50; EX1003¶¶44-45.

Another conventional design principle for multi-beam LiDAR devices was precise alignment of each emitter with its corresponding detector. EX1003, ¶¶46-49. The time-of-flight calculation is based on the roundtrip time for a photon to leave the emitter and reach the detector. The "clock" starts when the emitter is fired and stops when the photons are detected. Thus, many pre-2015 designs sought to align each emitter-detector pair to have a coincident field of view, thereby reducing the likelihood premature/errant detections and inaccurate the time-of-flight calculations. *Id.* (citing to prior examples of Retterath, Weimer, Imai, and Higashi).

In addition to the arrangement and alignment of emitters and detectors, the *type* of emitters and detectors useful for LiDAR applications was subject to exten-

sive research in the field before 2015. EX1003, ¶¶49-54. Regarding detector technology, earlier LiDAR devices employed linear-mode avalanche photodiodes ("APDs"). But, by the relatively late time frame leading up to September 2015, newer LiDAR designs instead implemented an improved detector technology called single-photon avalanche diodes ("SPADs" or sometimes referred to as "Geiger-mode" detectors). Critically here, implementing SPAD detector arrays in LiDAR designs was known to achieve a number of significant benefits. EX1003, ¶¶51-62 (citing to Higashi, Borowski, and others).

B. Brief Description of the '381 Patent

The '381 patent describes a system for collecting distance information. EX1001, 1:27-31. Figure 2 illustrates an embodiment of the system 100, which includes a transmit section (blue) and receive section (red):

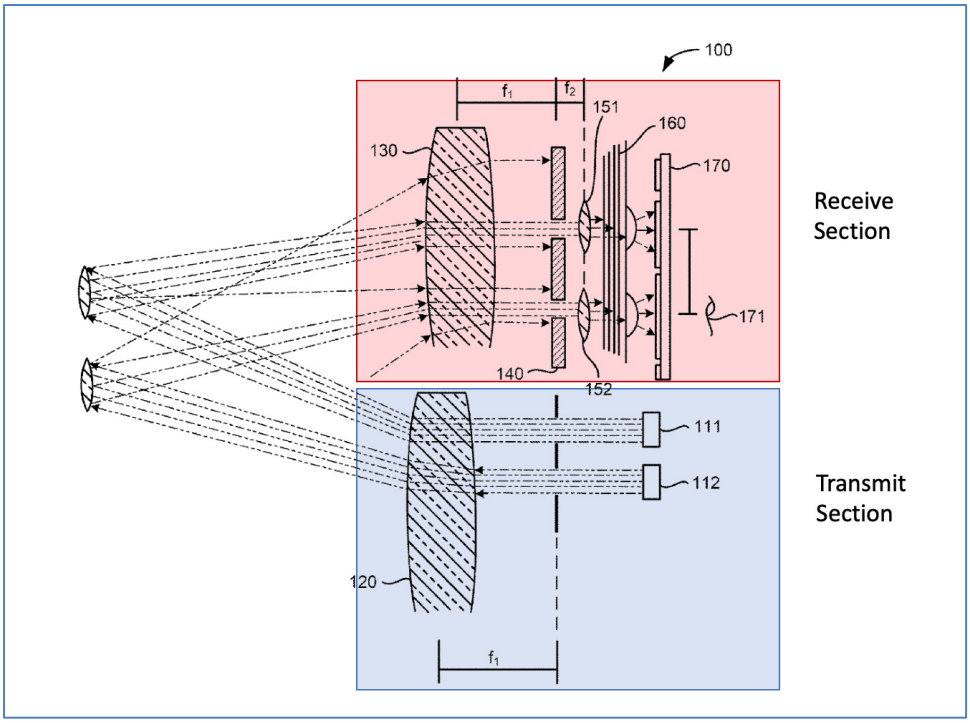

EX1003, ¶66 (EX1001, FIG. 2 (annotated)).

The transmit section includes a plurality of illumination sources 110, 111, 112, which may include any "suitable type of optical transmitter," such as laser diodes or light-emitting diodes, and are positioned behind bulk transmitting optic. *Id.*, 2:5-11; 5:29-40; 12:22-30; EX1003, ¶67.

After photons from the beams reflect off of objects in the field, they return to the receive section through a bulk imaging optic 130. *Id.*, 2:11-12. The photons pass through an aperture layer 140. *Id.*, 2:12-22; EX1003, ¶68.

Behind the aperture layer 140 are a plurality of lenses 150, an optical filter 160, and a plurality of pixels 170. *Id.*, 2:22-39. Each lens 150 collimates light passing through a corresponding aperture. *Id.*, 7:26-29. The optical filter passes

light having a specific wavelength band, while blocking wavelengths outside of that band. *Id*., 7:54-62. And each pixel 170 detects photons passed through its corresponding aperture 144 and lens 150. *Id*., 8:49-9:6; EX1003, ¶69.

C. Summary of the Prosecution History

The examination of the ’381 patent was terse. The application leading to the ‘381 Patent was filed on May 18, 2021, and about three months later, the examiner issued a non-statutory double-patenting rejection. EX1002, 454-461. There were no §102/§103 rejections based upon any prior art publication. After the applicant submitted a terminal disclaimer, the claims were allowed without any amendments or remarks. EX1002, 504-510. The examiner’s “reasons for allowance” was a fifteen word phrase that merely mentioned the “terminal disclaimer” without any identification of claim elements or prior art publications. EX1002, 504-510; EX1003, ¶70.

Critically, the prosecution history indicates the examiner did not consider the predictable combinations described in Grounds 1A-2C below, especially in light of the expert testimony here. If they had been considered, the ’381 patent never would have issued in its current form.

III. DETAILED EXPLANATION OF GROUNDS

A. GROUND 1A: Claims 1-3, 6-8, 10, 11, 14-17 are obvious based on Retterath and Borowski

1. Retterath

Retterath teaches a multi-beam LiDAR system designed to reduce cross-talk interference between adjacent emitter-detector pairs. EX1005, Abstract. The Li-DAR system includes an array of emitters 100 that each emit a beam 110:

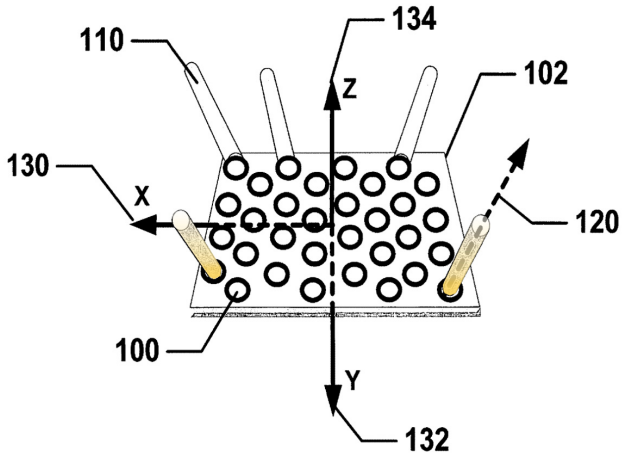

EX1003, ¶¶81-82 (EX1005, FIG. 4 (annotated)).

Each beam is emitted along a unique vector 120 angularly spaced from the other vectors in the array. *Id.*, 7:41-8:14. The pattern and vector of each beam is defined by a collimating lens 66 and directional lens 70:

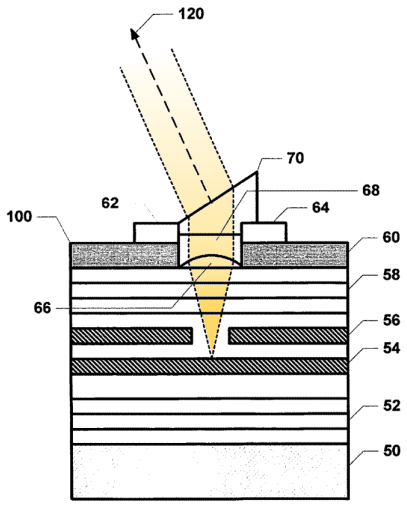

EX1003, ¶83 (EX1005, FIG. 5A, (annotated), 8:20-40).

The emitter beams pass through a transmit macro lens 80 to the surrounding environment, where they reflect off objects in the field and return to the device through a receive macro lens 230. *Id*.

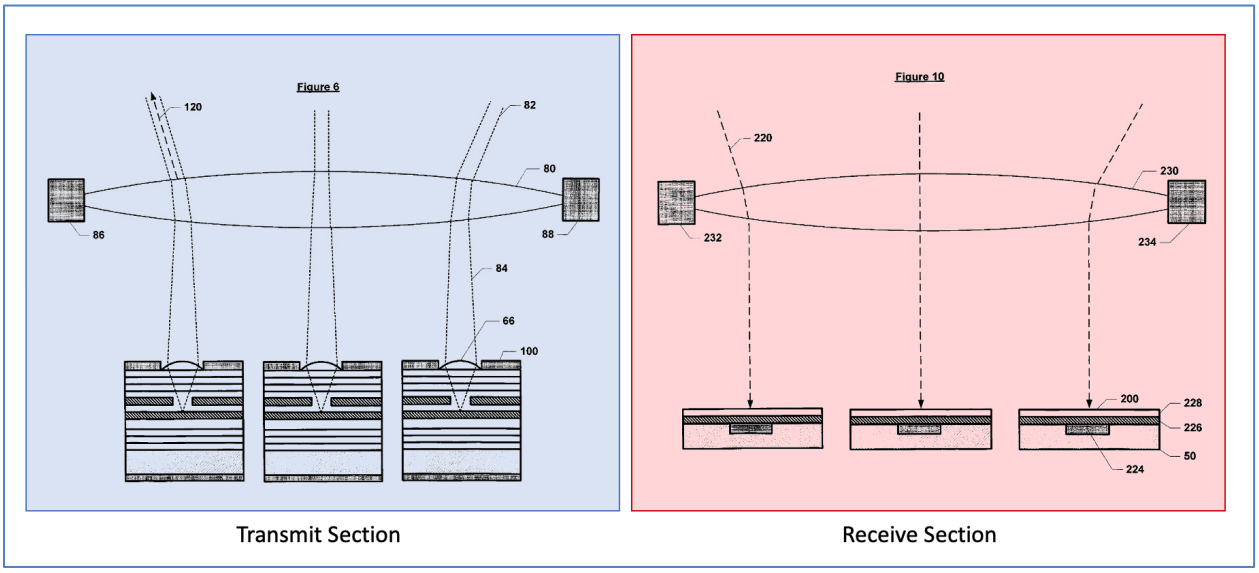

EX1003, ¶84 (EX1005, FIGS. 6, 10 (annotated)).

After the beams pass through the bulk receiving optic 230, they are reflected off of objects in the field and then detected by an array of detector elements 200:

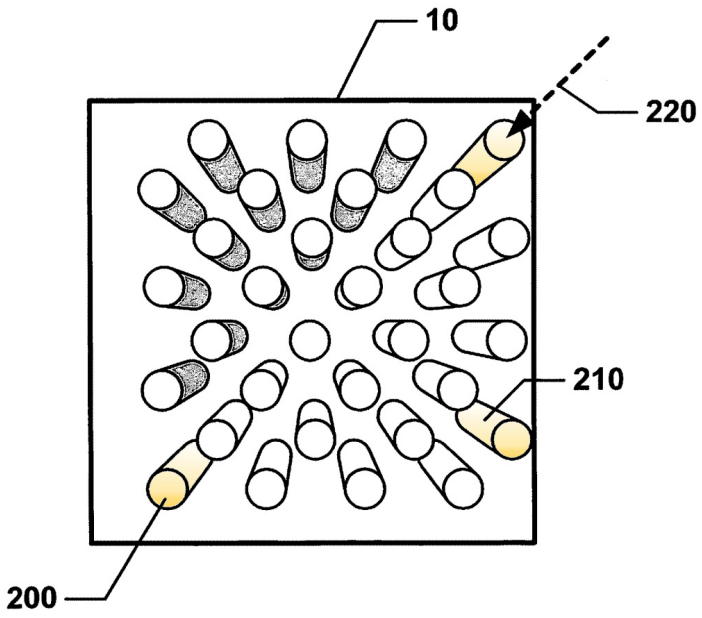

EX1003, ¶85 (*Id.*, FIG. 8 (annotated)).

Each detector 200 defines a field of view that receives light beams 210 along a unique vector 220. *Id.*, 9:56-59. Retterath plainly (and repeatedly) teaches that each emission vector 120 should be "on-coincident axis" with a corresponding detection vector 220. *Id.*, 6:23-28; 6:29-39; *see also*, 3:5-9; 9:62-65; EX1003, ¶¶86-87.

2. Borowski

Similar to Retterath, Borowski describes a LiDAR system that provides "a 3D landscape real-time imager." EX1006, Abstract. Borowski describes a conventional detector configuration that includes "a set of SPAD detector arrays, each

arranged along a vertical direction" so that "the detection data of the SPAD detector arrays [is] combined to acquire 3D imaging data of the said at least partial landscape." *Id.*; EX1003, ¶¶88-89.

Borowski "provide[s] an imaging technique capable of generating a precise image of complex scenes in a faster way than with conventional imaging techniques," and that "offers an improved trade-off between image depth resolution and fast data acquisition for the detection of movements." *Id.*, [0003]; EX1003, ¶¶90-96. Specifically, Borowski suggests that each detector pixel can be implemented to include multiple SPADs so that, "[e]ven if some of the SPADs have been triggered already, the remaining SPADs can still receive light." *Id.* Borowski utilizes "ultra-sensitive SPADs, which can be easily fabricated with a CMOS process, combined with a simple low cost germanium process." *Id.*, [0014]. "In the example shown in FIG. 1, four SPAD sensor cells 3-6 are built on the same first CMOS IC 1." *Id.*, [0154].

3. Predictable Retterath-Borowski combination

Multiple reasons would have prompted a POSITA to implement Retterath's LiDAR system using multiple SPADs per pixel (as suggested by Borowski) so as to achieve known benefits, as articulated below. EX1003, ¶126-130. This is particularly true in view of the relatively late time frame of the Critical Date here (September 2015). *Id.* As described above (*supra*, §III-A-1), Retterath describes a

LiDAR system including an array of detectors (e.g., "detector elements 200"). EX1005, Abstract, 3:5-9, 6:23-28, 7:41-8:14, 8:20-40, 9:53-10:31, FIGS. 4, 5A, 6, 8, 10. Borowski provides a straightforward suggestion for implementing SPADs for each of the detector elements in such a LiDAR device. EX1003, ¶131.

In the resulting combination, each pixel in the detector array 200 of Retterath's LiDAR system would have utilized a plurality of SPADs, consistent with Borowski's suggestion. EX1003, ¶132 (citing to EX1006, FIG. 6). Additionally, a POSITA would have utilized conventional SPAD-associated circuity, including a quenching circuit and signal processing circuitry (e.g., time-digital-converter (TDC) and digital signal processing (DSP) processor) adapted for photon counting, facilitating enhanced sensitivity and imaging speed, consistent with Borowski's suggestions. *Id.* (citing to EX1006, FIGS. 6, 11, 12a, 12b, 18-19, [0223-24, 27-28], [0021], [0034], [0042], [0062], [0127], [0192], [0197-98], [0241-42], and claim 23).

Further, in view of Borowski's suggestions and the known benefits at the time, a POSITA would have been prompted to implement each pixel in Retterath's detector array as a "macro-cell" having multiple SPADs. EX1003, ¶¶132-133. A POSITA would have recognized, based on Borowski's suggestions, the predictable benefits of such a configuration for smart averaging in time and space, enhancing image depth and acquisition speed (also articulated above). *Id.* (citing to EX1006,

FIG. 12a, [0233] (4-SPAD macro-cell), and [0323] ("N diodes [in FIG. 27] will react like a single SPAD with a very fast recovery time"); EX1029, [0033]-[0034]. In doing so, the resulting combination would have predictably (and beneficially) employed a conventional operating wavelength (e.g., around 1500 nm, as suggested by Borowski) to provide safe and effective laser emission and detection. *See e.g.*, EX1005, 19:34-54 ("can utilize other wavelengths"); EX1006, [0111] ("select wavelengths in a range which is safe to the eyes of the persons which can be targeted by the illuminating device."). To be clear, the combination is not based on bodily incorporation of Borowski's components, but a predictable implementation of Borowski's suggestions within Retterath's system. A POSITA is not an automaton, and would have predictably implemented multi-SPAD macro cells, based on Borowski's suggestions. EX1003, ¶132 (citing corroborating references, including EX1017, 5:10-15); *Intel Corp. v. PACT XPP Schweiz AG*, 61 F.4th 1373, 1379-80 (Fed. Cir. 2023) ("a person of ordinary creativity, not an automaton").

Here, the evidence confirms at least five articulated reasons that would have prompted a POSITA to implement each pixel of Retterath's detector array using multiple SPADs (as suggested by Borowski).

First, a POSITA would have been motived to predictably combine Retterath and Borowski to enhance the signal to noise ratio of Retterath's detectors, and thereby improve system performance. EX1003, ¶134. For example, a POSITA

would been prompted to utilize SPAD in Retterath's system, in accordance with Borowski, to improve sensitivity by facilitating detection of single photons. *See e.g.*, EX1006, [0019]. Borowski explicitly described the benefit that SPADs "are able to switch (avalanche) when receiving single photons." *Id.* Such sensitivity would have facilitated an enhanced signal-to-noise ratio and improved scene detection. EX1003, ¶134. Indeed, such benefits of SPADs were ubiquitously known in the prior art. *Id.* (citing to corroborating examples in EX1023, 8 ("very high sensitivity" and "easily incorporated into an array") and EX1019, 4 (describing SPADs as having "extraordinary" sensitivity for LiDAR applications)).

Second, a POSITA would have been prompted to implement Retterath's LiDAR system using multiple SPADs per pixel (as suggested by Borowski) to achieve the performance advantages of SPADs known before September 2015, such as a high data-rate output in combination with low-power operation (and with the high signal-to-noise ratio described above). EX1003, ¶135 (citing to corroborating examples in EX1028, [0012]-[0014], [0020]-[0021] and EX1012, [0003], [0005], [0029]).

Third, a POSITA would have been prompted to combine Retterath and Borowski to utilize multiple SPADs for each pixel to improve detection capability and accuracy. EX1003, ¶136. A POSITA would have recognized from Borowski's teachings that multi-SPAD pixels advantageously increased the likelihood the pixel

would more accurately detect photons when one or more of the individual SPADs was subject to quenching and reset. EX1006, [0053]; [0044]; EX1003, ¶136 (citing to corroborating example in EX1028, [0049]-[0050], [0138]-[0139]). Borowski teaches the known benefit in which the output of a multi-SPAD pixel would be filtered and averaged such that it "acts as the equivalent of a single 'perfect' SPAD having no recovery time." EX1006, [0053].

Fourth, a POSITA would have been prompted to implement the Retterath-Borowski combination due to Borowski's express suggestion for "an improved trade-off between image depth resolution and fast data acquisition for the detection of movements" ([0003]), by "local averaging between adjacent detectors to optimize the tradeoff between speed and sensitivity." EX1006, [0026], *see also* [0083] ("FIG. 12 illustrates smart averaging in time and space for a 4-SPAD detector macro-cell), [0136-38] (an example of local averaging "in space and/or time … of at least some of the SPAD diodes"), [0220] ("a programmable size, multidetector which optimizes the resolution/speed ratio (at macro-cell level)"), [0221] ("Another macro-cell optimization technique … to improve the speed and resolution of the SPAD sensor array"), [0222], [0233], [0237]. [0249], [0258], [0267-71]; EX1003, ¶137.

Fifth, a POSITA would have found it obvious to combine Retterath and Borowski because doing so was the application of known techniques (Borowski's

suggestion for multi-SPAD detectors) to a known system (Retterath's LiDAR system that utilized an array of detectors) ready for improvement to yield predictable results. EX1003, ¶138. The law mandates that "when a patent 'simply arranges old elements with each performing the same function it had been known to perform' and yields no more than one would expect from such an arrangement, the combination is obvious." *KSR Int'l Co. v. Teleflex Inc.*, 550 U.S. 398, 417 (2007). Both Retterath and Borowski are analogous and similarly relate to LiDAR systems, and a POSITA would have recognized that applying Borowski's suggestion to Retterath's system would have led to predictable results of enabling a user to enhance the sensitivity and extend the capability of the resulting LIDAR device—all while maintaining Retterath's purpose/functionality as a LiDAR unit. Accordingly, a POSITA would have had a reasonable expectation of success in making the proposed modifications based on the similarity of the emitter/detector systems for distance measurement in Retterath and Borowski. Indeed, Retterath contemplates that, "while various … configurations … have been described for use with the disclosed embodiments, others besides those disclosed may be utilized." EX1005, 19:55-20:22. Borowski plainly suggests another such configuration—implementing multi-SPAD detectors in a LiDAR system—a suggestion that was already

ubiquitous in the prior art before September 2015. EX1003, ¶¶138-141 (citing corroborating examples in EX1011, FIG. 4, [0027]; EX1005, 6:57-59; EX1006, [0014], [0154]).

4. Application to Challenged Claims

(a) *Element 1(a):*

To the extent that the preamble is deemed limiting, the Retterath-Borowski combination provides the recited system. EX1003, ¶¶142-144; *supra* §§III.A.1-3. Retterath describes "LiDAR (light detection and ranging) systems" that "use an array of emitter/detector sets to cover a given field of view where each emitter/detector set is configured to receive reflected light energy that is on a given coincident axis unique for that emitter/detector set." EX1005, 2:66-3:21, 3:58-61, 7:17-40 ("compute the distance to the reflected object based on a time of flight calculation"), Abstract, 1:18-20; *see also*, EX1006, [0031], Abstract.

(b) *Element 1(b):*

The Retterath-Borowski combination provides a bulk transmitting optic, as claimed. EX1003, ¶145. Retterath provides a macro lens, such as macro lens 80 (FIG. 6). EX1005, 9:12-28; *see also* 4:4-10. Like the bulk transmitting optic described by the '381 patent, the macro lens receives light from multiple emitters and transmits it to the surrounding environment. *Id.*; EX1001, FIG. 1.

Indeed, Retterath indicates that "[t]he macro lens 80 is configured to diverge to produce a plurality of beams 82 along a multitude of emitter vectors (coincident axes) 120 throughout the device's field of view." EX1005, 9:12-20;.

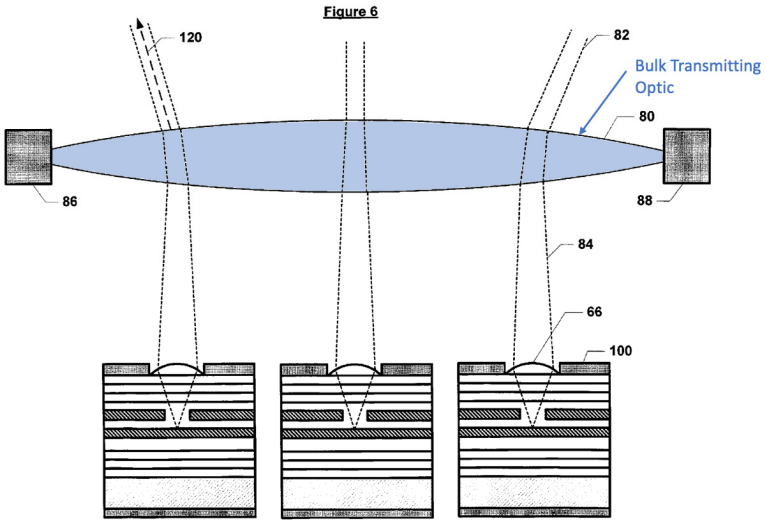

EX1003, ¶146 (EX1005, FIG. 6 (annotated)).

(c) ***Element 1(c):***

The Retterath-Borowski combination provides the claimed plurality of optical emitters in the recited arrangement. EX1003, ¶147. Retterath describes an array of emitter elements 100, such as illustrated in FIG. 11b:

Figure 11b

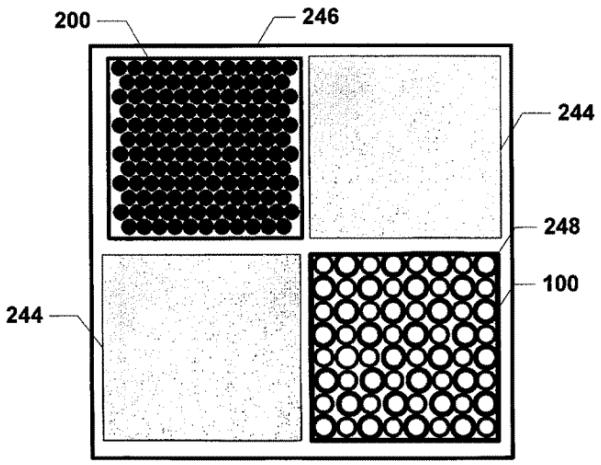

EX1005, FIG. 11b, 6:8-15.

The array of emitters 100 are arranged behind the macro lens 80. *Id.*, FIG. 6 (annotated below), 9:12-20.

Figure 6

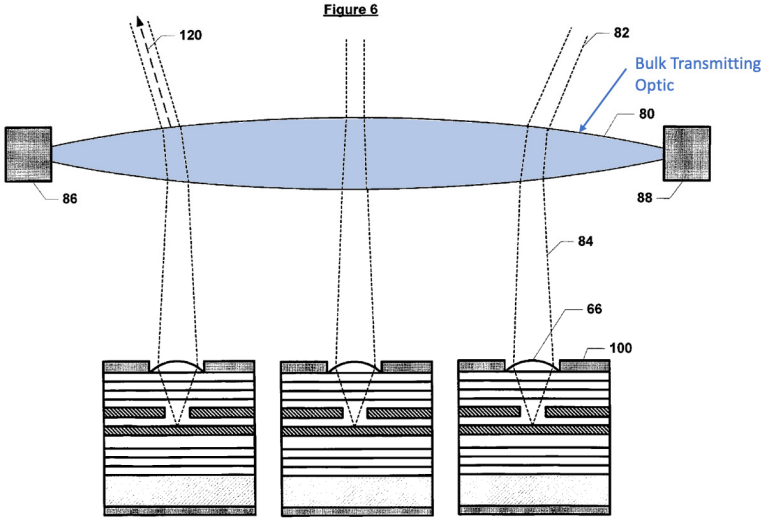

EX1003, ¶147 (EX1005, FIG. 6 (annotated)).

The emitters output converging light beams 84, which are a form of electromagnetic radiation. EX1003, ¶¶147-148. The beams 84 are output at an operating wavelength, such as about 1500 nm, consistent with Retterath and Borowski's suggestions. EX1005, 19:33-54; EX1006, [0111]; *supra* §III.A.3 (describing wavelength of predictable combination). The converging beams 84 pass through the bulk optic into an external field as beams (e.g., beams 82 in FIG. 6).

The emitter elements 100 output laser beams according to an illumination pattern comprising a plurality of non-overlapping emission regions. EX1003, ¶148; *see also*, 3:1-4:34, 6:8-7:40, 7:41-9:12, 9:13-10:3, FIGS. 12-17. Referring to FIG. 7, Retterath explains that each emitter has an emission region defined by round spot 94 of the emitted laser beam.

Figure 7

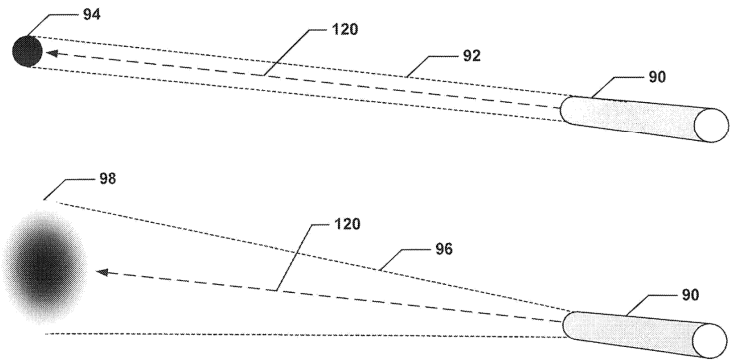

EX1005, FIG. 7, 9:29-30.

"The top diagram [of FIG. 7] shows a perfectly collimated beam 92 that produces a round spot 94 on the surface of the reflecting object." *Id.*, FIG. 7, 9:29-36.

Retterath explains that collimated beams 92 are preferred over diverging beams 96 because "a smaller round spot 94 size will result in fewer locations within the device field of view being illuminated" and "a smaller round spot 94 will generally reduce or remove crosstalk with detectors that are near the on-coincident axis matched detector for this emitter." *Id.*, 9:35-44; EX1003, ¶149.

Retterath explains "an ideal location 370" for each beam spot lies at the intersection of two grid lines, such that the overall illumination pattern has a plurality of non-overlapping emission regions. *Id.*; EX1003, ¶150.

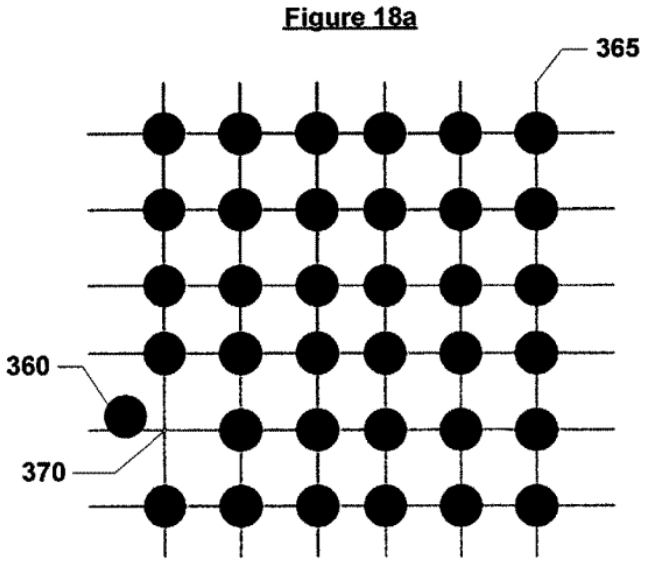

EX1005, FIG. 18a; 17:11-15.

Indeed, Retterath at FIGS. 4 and 6 provides examples of an illumination pattern in which each beam from an individual emitter is output along a unique emission

vector 120 and is non-overlapping with the emission vectors of all other beams. EX1003, ¶151.

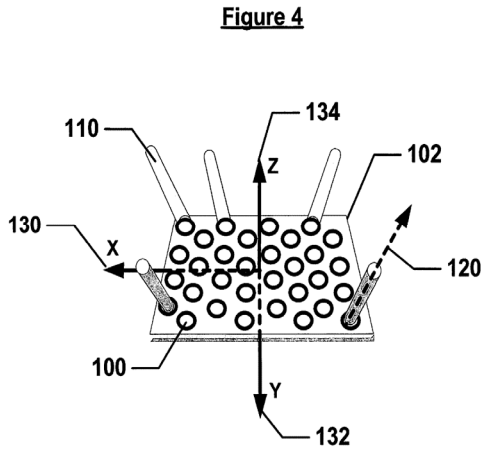

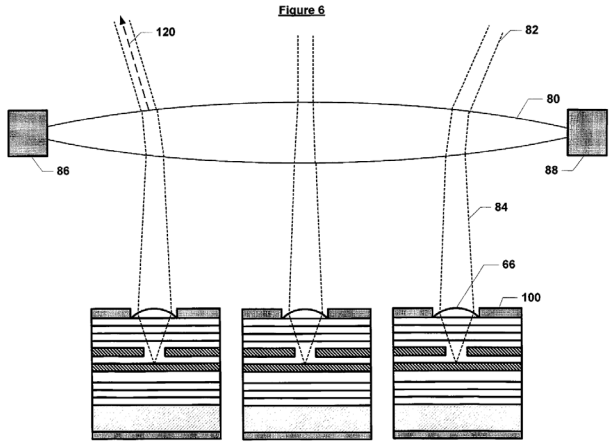

EX1005, FIGS. 4 (left), 6 (right), 7:61-8:16, 9:12-20.

Retterath's teachings are like the '381 Patent. *See e.g.*, EX1001, FIGS. 1, 2 (illustrating illumination beams of illumination sources 110), 2:7-11 ("to output an illuminating beam … towards a discrete spot in the field"), 2:57-59 ("a set of illumination sources 110 that project discrete illuminating beams"), 10:62-66 (same); EX1003, ¶152.

(d) ***Element 1(d):***

The Retterath-Borowski combination provides a bulk imaging optic disposed adjacent to the bulk transmitting optic. EX1003, ¶153. Retterath describes a bulk imaging optic provided by a "macro lens 230," and the detector elements 200 are positioned behind macro lens 230. EX1005, FIG. 11b, 6:8-15;10:23-30. Like the bulk imaging optic described by the '381 patent, macro lens 230 receives light

from the external environment and directs it to the detector array:

Figure 10

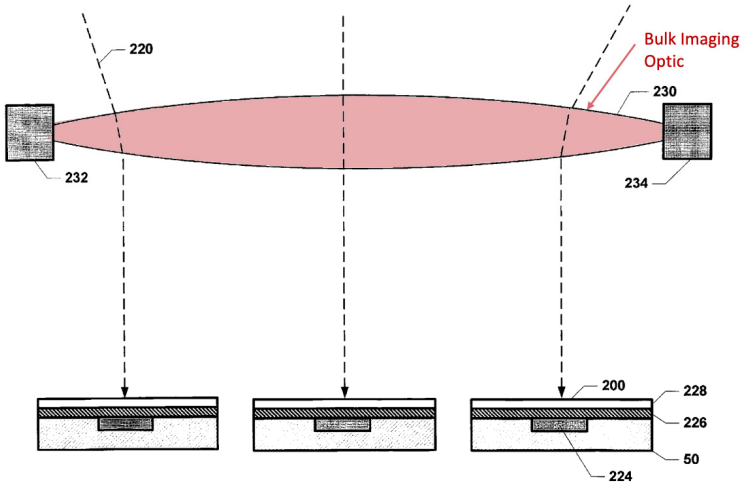

EX1003, ¶154 (EX1005, FIG. 10 (annotated))

The bulk imaging optic (i.e., macro lens 230) is disposed adjacent to the bulk transmitting optic (i.e., macro lens 80). EX1003 ¶155. For example, as shown in FIG. 11b, the detector array 200 and emitter array 100 are formed as diagonally neighboring sections 246, 248 (each with corresponding electronics 244):

Figure 11b

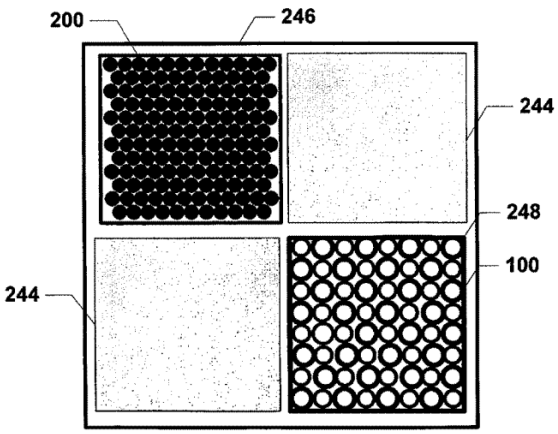

EX1005, FIG. 11b, 10:62-11:4.

The emitter array 100 is adjacent to the detector array 200, next to one another in quadrants shown in FIG. 11b, thereby providing the macro lens 230 (located in front of the detector array 200) at a location adjacent to the macro lens 80 (located in front of the emitter array 100). Here again, the adjacent arrangement is like that of the '381 patent. *See e.g.*, EX1001, 11:11-13 (offset laterally "and" vertically"); FIGS. 6, 10, 2:27-34, 9:12-20, 10:23-30 (similar descriptions with no indication of the range or the criticality of the offset); EX1003, ¶¶156-157 (explaining that the adjacent arrangement was ubiquitous is such LiDAR devices, and citing to corroborating examples at EX1013, FIG. 2; EX1031, FIG. 6; EX1033, FIGS. 1-2).

(e) ***Element 1(e):***

The Retterath-Borowski combination provides this Element. Each detector 200 on Retterath's LiDAR device includes a photoreceptor 224 that comprises a "pixel" because it detects incident light received through bulk optic 230 for a specific location in the array. EX1005, 9:52-10:22, FIGS. 9-10; *supra*, §III.A.3(Retterath-Borowski combination). Such disclosure comports with the '381 Patent, which explains that a pixel may comprise one or more detectors. EX1001, 10:46-60; EX1003, ¶158.

Each pixel in the plurality of pixels has a field of view coincident with an

emission region of a corresponding optical emitter. FIG. 8 (below) illustrates a FOV arrangement of Retterath's detector in which each detector 200—and its photoreceptor 224—has a field-of-view over which it receives light beams 210, each of which is centered along a unique vector 220. *Id.*, 9:56-59 ("Each detector of detector elements 200 has an optimal receive detector vector (coincident axis) 220 along which the maximum optical energy will be transferred."), 9:53-10:31, FIGS. 8, 10.

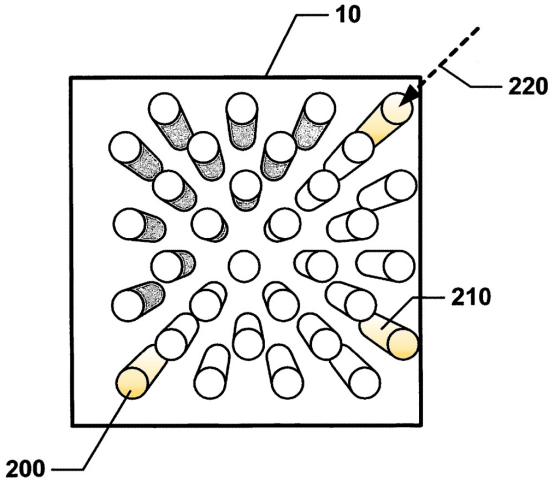

EX1003, ¶159 (EX1005, FIG. 8 (annotated)); *see also* 10:24-11:25, 15:14-16:56.

Referring to FIGS. 4 and 5A (annotated below), each emitter element 100 includes a collimating lens 66 and directional lens 70 to produce a collimated beam of light 68 that defines an emission region for the individual emitter. EX1005, 8:36-40; 7:61-8:14. The beam, and thus the emission region, is centered along a unique emission vector 120 as shown below:

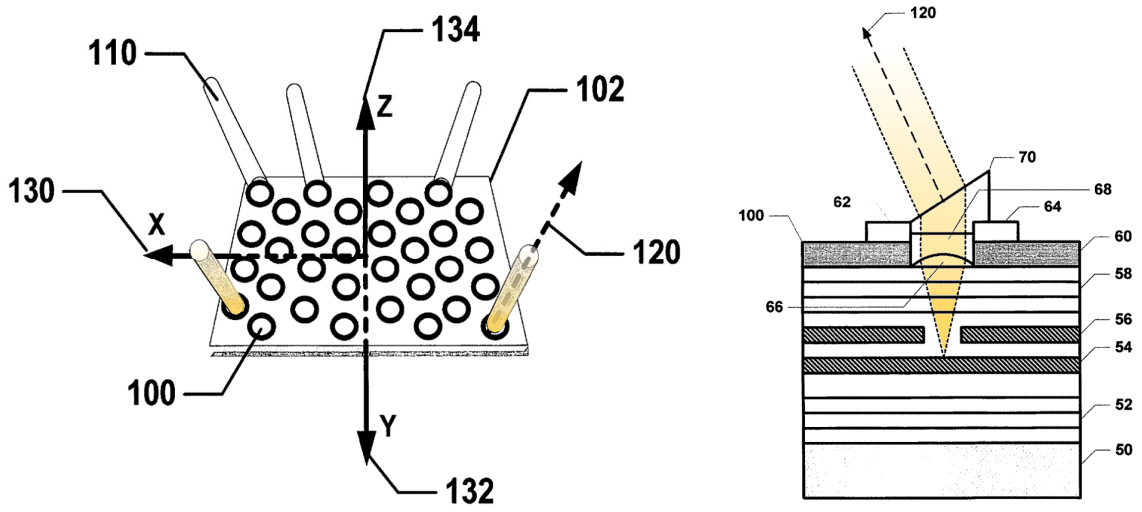

EX1003, ¶¶160-61 (EX1005, FIGS. 4, 5A (annotated)).

Retterath explains that each emission vector 120 is "on-coincident axis" with a corresponding detection vector 220—"For each emitter/detector set of elements 100/200, the emitter and detector vectors are coincident and form a common on-coincident axis that is at an angle relative to a vector normal to the plane of the array that is unique for that emitter/detector set." EX1005, 6:23-28; 6:29-39; 10:66-11:1. Thus, the field-of-view for each pixel in the Retterath-Borowski combination is co-incident with the emission region of its corresponding emitter. *Id.*; EX1003, ¶162.

Moreover, each pixel in the Retterath-Borowski combination is operable to detect photons emitted from its corresponding optical emitter and received through the bulk imaging optic after being reflected from surfaces within the field. *See e.g.,* EX1005, 6:23-28, 8:47-49, FIGS. 6, 10; EX1003, ¶163.

In the Retterath-Borowski combination, the array of detector 200 on Retterath's LiDAR system are implemented using Borowski's suggested multi-SPAD detector array (e.g., each detector as a macro-cell that includes multiple SPADs) such that each detector array is a pixel comprising a plurality of SPADs. *Supra*, §III.A.3; EX1005, Abstract, 3:5-9, 6:23-28, 7:41-8:14, 8:20-40, 9:53-10:31, FIGS. 4, 5A, 6, 8, 10; EX1006, Abstract, [0003], [0014], [0027], [0044], [0154-57], [0233], [0323], FIGS. 1, 5, 12, 27; EX1003, ¶¶164-65.

(f) ***Element 1(f):***

The Retterath-Borowski combination discloses Element 1(f). Retterath describes an optical filter provided by a bandpass filter 226 positioned in the optical path of each pixel 224. EX1005, FIGS. 9-10, 10:4-27. The bandpass filter 226 is an optical filter that allows a set of wavelengths of electromagnetic radiation (e.g., encompassing the operating wavelength of the Retterath-Borowski combination) to pass through the macro lens 230 and onto the pixels 224, while blocking electromagnetic radiation outside the set of wavelengths from reaching the pixel 224s. *Id.*, 5:26-28; EX1003 ¶166.

(g) ***Claim 2:***

The Retterath-Borowski combination discloses Claim 2. Retterath describes a LiDAR system that measures distance based on the time between transmission of illuminating beams from the emitters and detection of photons by the pixels. *supra*

§§III.A.1-3, EX1005, 11:57-60 ("determine the distance of the object that reflected the signal by measuring the time of flight of the photons in the emitter pulse sequence."); 14:42-45. The time-of-flight measurements provides three-dimensional data based on the three-dimensional spatial position and angular orientation of each emitter-detector pair in the array. *Id*., 7:61-8:14, FIGS. 6, 18a; EX1006, [0031], [0048]; EX1003, ¶¶167-68.

(h) ***Claim 3:***

In the Retterath-Borowski combination, Retterath describes emitters 100 are in a first arrangement (i.e., electro-optical section 248) and the detectors 200 and pixels 224 are in a second arrangement (electro-optical section 246). EX1005, FIGS. 4, 11b. Retterath describes an equal number of detector and emitter elements, indicating first and second arrangements proportional in number. EX1005, 10:66-11:1 ("equal to"); EX1003, ¶¶169-70.

(i) ***Claim 6:***

Retterath describes an aperture layer provided by waveguides 222 associated with Retterath's detectors 200. EX1005, FIG. 9, 9:53-10:22, 3:58-4:44. The waveguides define openings or apertures for light to pass through along vector 220 to the corresponding detector. EX1005, 10:12-14.

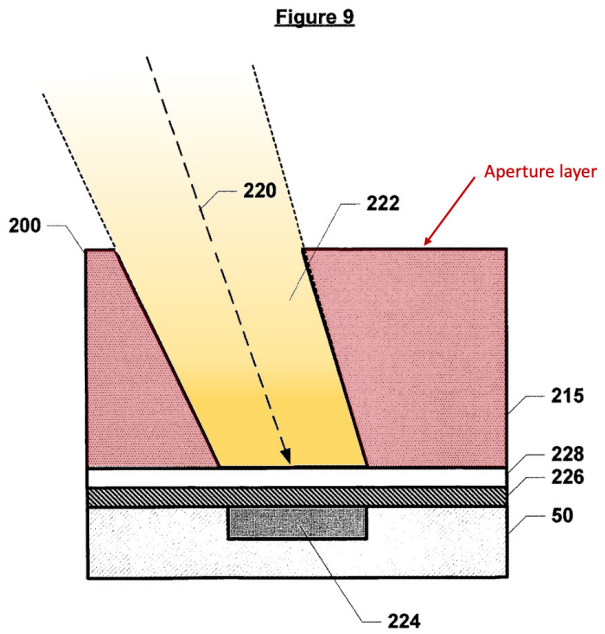

EX1003, ¶171-72 (EX1004, FIG. 9 (annotated)).

The waveguide material 215 surrounding the waveguide 222 is a stop region that blocks stray light from reaching the detector element. "Inbound optical energy that is more than slightly-non-parallel to the receive detector vector (coincident axis) 220 will be ***substantially blocked by the detector waveguide*** or directed elsewhere by the macro lens." EX1005, 9:62-65, 3:58-64 ("on-coincident axis for that emitter/detector set). Accordingly, in the Retterath-Borowski combination, the waveguide operates to further define the field of view for its corresponding pixel while achieving added benefits (articulated below). *Id.*, 6:20-228, 3:58-64, 10:14-22; EX1003 ¶173. As depicted above, Retterath expressly contemplates that each of the multiple detector elements is uniquely aligned with a dedicated waveguide 222 that

defines an aperture over its respective pixel. EX1005, 10:4-30, 3:58-64, FIGS. 6, 9, 11b.

To the extent Retterath does not explicitly show that the waveguide layer 215 (FIG. 9) is implemented together with the configuration including the macro detector lens 230 (FIG. 10), a POSITA would have been motivated to do so for multiple reasons, especially by the relatively late time frame leading up to September 2015. EX1003, ¶¶174-178. ***First***, a POSITA would have been prompted to do so to advantageously promote reliable detection of desired optical energy (e.g., originating from the corresponding emitter of the aligned emitter-detector pair) while blocking out extraneous optical energy from background/unintended sources. EX1003 ¶176. Indeed, Retterath expressly suggests the benefit of the waveguide material 215 substantially block inbound optical energy that is more than slightly-non-parallel to the receive detector vector, so a POSITA would have been motivated to use of the waveguide layer 215 between the macro detector lens 230 and plurality of detector elements (i.e., pixels 224) for purposes of advantageously isolated the respective detectors elements from one another and block extraneous light passing through the macro lens from an unintended source. *Id.* (citing to EX1005, 9:62-65).

Second, a POSITA would have been motivated to implement Retterath's waveguide layer 215 (FIG. 9) together with the configuration including Retterath's macro detector lens 230 (FIG. 10) because the blocking material 215 surrounding

the waveguides 222 would have advantageously reduced internal reflections from the neighboring detector elements/protective layer, thereby reducing cross-talk and further improving the signal-to-noise ratio. EX1003 ¶176.

Third, a POSITA would have been motivated to implement Retterath's waveguide layer 215 together with the configuration including Retterath's macro detector lens 230 because Retterath expressly suggests doing so. EX1005, 19:55-20: 12 ("elements described with respect to one embodiment can be implemented in other embodiments even when not described in such embodiments unless otherwise noted"). Thus, Retterath plainly teaches that structures from one embodiment (such as the waveguide layer 215 of FIG. 9) can be implemented in combination with other embodiments (such as FIG. 10). Not only would this express suggestion prompt a POSITA at the time, it further confirms the predictable benefits (articulated above) and expectation of success in utilizing such features together. EX1003 ¶177.

To be clear, the waveguides formed over individual pixels are together "an aperture layer," whether or not formed as part of a continuous piece of material. Moreover, a POSITA would have found it obvious to form the waveguides as part of a continuous mask over the detector array, to facilitate manufacturing and fabrication of the detector array assembly, and to prevent extraneous optical energy from reaching the detector by providing continuous coverage via a continuous mask.

EX1003 ¶178; EX1018, 21:60-22:10, FIG. 16; EX1033, FIGS. 1-2, [0006], [0017]-[0023].

(j) ***Claim 7:***

Retterath describes that the waveguide material 215 is designed to block stray light. *Id.*, 9:62-65 ("Inbound optical energy that is more than slightly-non-parallel to the receive detector vector (coincident axis) 220 will be substantially blocked by the detector waveguide."). A POSITA would have recognized from Retterath's description that the waveguide material 215 comprises an optically opaque material to effectuate that purpose. EX1003, ¶¶179-80. The waveguide material 215 is formed as a layer on substrate 50, which is a thin layer relative to the optical system. *Id.*; EX1004, 10:4-22.

To be clear, even if Retterath did not explicitly disclose a thin opaque structure (which it does), a POSITA would have found it obvious to form the waveguide material 215 as a thin opaque structure. EX1003 ¶181. A POSITA would have been prompted to utilize an optically opaque material to achieve Retterath's stated goal of blocking light that is not intended for a particular pixel, and a thin material would have promoted a compact overall profile. *Id.*

(k) ***Claim 8:***

The Retterath-Borowski combination discloses claim 8. Retterath describes a plurality of detector elements, including first, second, third, and fourth, detector elements, and that a dedicated waveguide 222 forms an aperture over its respective pixel. EX1005, 10:4-30, FIGS. 6, 9-10, 11b. For each of these detector elements, an optical path is formed between the bulk imaging optic (e.g., macro detector lens 230), the aperture (e.g., provided by waveguide 222), and the pixel. *Id.*; EX1003, ¶¶182-183.

(l) ***Claim 10:***

Retterath-Borowski renders obvious claim 10. EX1003, 184. As explained *supra* §§III.A.1-3, in the Retterath-Borowski combination, detector elements (i.e., pixels 224) are connected to circuitry for "processing the sensed signal….", consistent with Retterath's description. EX1005, 12:30-67, FIG. 10. FIGS. 3 and 14 (reproduced below) provide examples of the processing circuit. *Id.*; EX1003, ¶185.

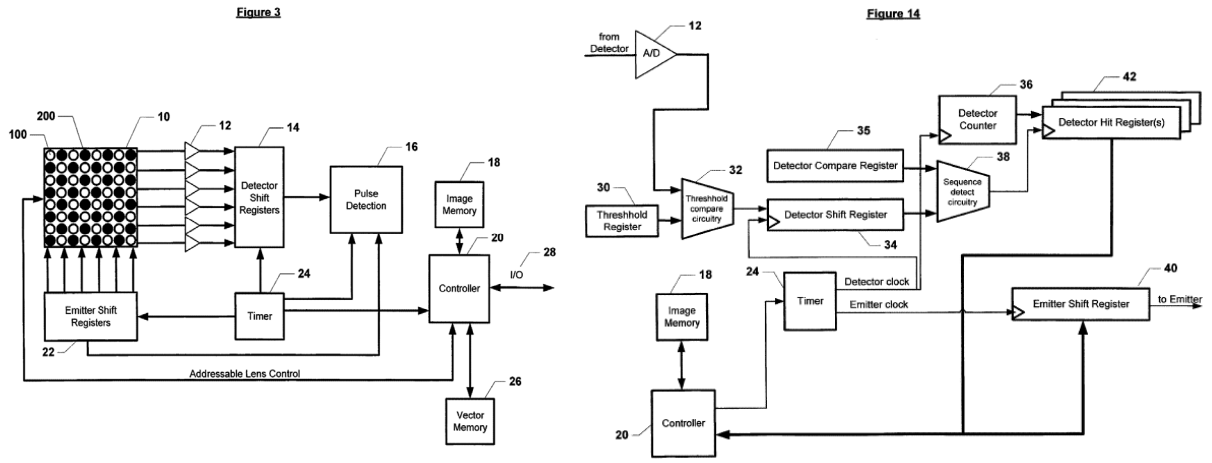

Id., FIGS. 3, 14

Borowski describes in detail the signal processing circuit to be coupled with the resulting "SPAD" detectors in the Retterath-Borowski combination. EX1003 ¶186. A "SPAD sensor array is built on a CMOS integrated circuit" that includes "an analog part 83 which converts the received photons from the photonic part 82 in pulses (Geiger/avalanche mode) that directly trigger the time-to-digital converters [TDCs]," and "a digital section 84 in which the pulse currents are converted to digital data, processed and/or combined." EX1006, FIG. 11, [0223-24, 27-28], [0245-48 (similar circuit in FIG. 18), [0187-89] (integrated SPAD and TDC in FIG. 6); EX1003 ¶186. In the predictable combination, a signal processing circuit is coupled to the plurality of pixels, in accordance with Retterath and Borowski. *Supra*, §III.A.3 (predictable Retterath-Borowski combination).

(m) ***Claim 11:***

In the Retterath-Borowski combination, incident photons are counted within a sampling period for the pixel detectors (i.e., SPAD detector arrays), in accordance with Borowski. *Id*. ¶187. Borowski describes photon counting by, e.g., "an analog part 83" in the signal processing circuit of FIG. 11, which "converts the received photons from the photonic part 82 in pulses (Geiger/avalanche mode) that directly trigger the time-to-digital converters." EX1006, FIG. 11, [0223-24, 27-28], [0021], [0034] ("the time of flight of each event detected at each SPAD detector cell is counted from the determined reference time"), [0042] ("the data processing circuits

can determine from which pulse a particular photon count results, and use its precise timing to further increase the measurement precision"), [0062] ("a statistical processing circuit comprising at least one counter of the detected events at the SPAD diode"), [0127], [0192], [0197-98], [0241-42], claim 23. EX1003, ¶188.

(n) ***Element 14(a):***

Supra, Analysis of 1(a). EX1003, ¶¶189-91.

(o) ***Element 14(b):***

Supra, Analysis of 1(b). EX1003, ¶192.

(p) ***Element 14(c):***

Supra, Analysis of 1(c). As discussed above, the emission region of each emitter represents a spot in the field ahead of the LiDAR system. EX1005, FIG. 7, 9:29-44; EX1003, ¶193.

(q) ***Element 14(d):***

Supra, Analysis of 1(d). EX1003, ¶194.

(r) ***Element 14(e):***

Supra, Analysis of 1(e). In the Retterath-Borowski combination, each detector element 200 and its corresponding pixel 224 are paired with a corresponding emitter 100, such that the pixels correspond in number to the emitters. EX1005, 10:44-49, 10:66-11:4, 11:37-39, FIGS. 4 and 8; EX1003, ¶¶195-196.

(s) ***Element 14(f):***

Supra, Analysis of 1(f). EX1003, ¶197.

(t) ***Element 14(g):***

Supra, Analysis of Claim 2; *see also*, Elements 1(a)-1(f). EX1003, ¶198.

(u) ***Claim 15:***

In the Retterath-Borowski combination, "each detector of detector elements 200 is 'paired' with a designated emitter of emitter elements 100" and the "pulse sequence transmitted by an emitter of emitter elements 100 will be sensed and detected only by its paired detector of detector elements 200," in accordance with Retterath, thereby indicating that the emitters illuminate substantially only emission regions that can be detected by the plurality of pixels. EX1005, 10:44-49; EX1003, ¶¶199-200.

(v) ***Claim 16:***

In Retterath/Borowski, each pixel is operable to output a signal corresponding to a count of photons incident on the pixel within one sampling period, which is processing by the signal processing circuit. *Supra*, Analysis of Claims 10-11; EX1003, ¶¶201-202.

(w) ***Claim 17:***

Supra, Analysis of Claim 6; EX1003, ¶203.

B. GROUND 1B – Claims 6-8, 17 are obvious based on Retterath in view of Borowski and Hipp

1. Overview of Hipp

Similar to Retterath and Borowski (detailed above), Hipp describes a LiDAR system that uses emitters and detectors for a time-of-flight calculations. EX1007,

5:19-56; 21:14-67. Hipp suggests the use of a conventional aperture layer provided by a "shadow mask" including a plurality of apertures formed over pixels in a detector array and a stop region formed between adjacent apertures to block undesired light from reaching the pixels. EX1007, 21:57-67 ("shadow mask … designed such that only that light is transmitted which would also be incident on the active zones of the APDs"); EX1003, ¶¶104-107. The mask is made of opaque material and formed as a thin layer printed on the surface of array. *Id*., 21:60-67, FIG. 16.

2. Predictable Retterath-Borowski-Hipp combination

For the reasons articulated below, a POSITA would have been implement an aperture layer (as suggested by Hipp's shadow mask) over the SPAD detector array of the Retterath-Borowski combination (detailed above) to achieve known benefits. EX1003, ¶¶203-207. In such predictable combination, each of the apertures (i.e., pinholes) would have been aligned with a corresponding one of the Retterath-Borowski pixels:

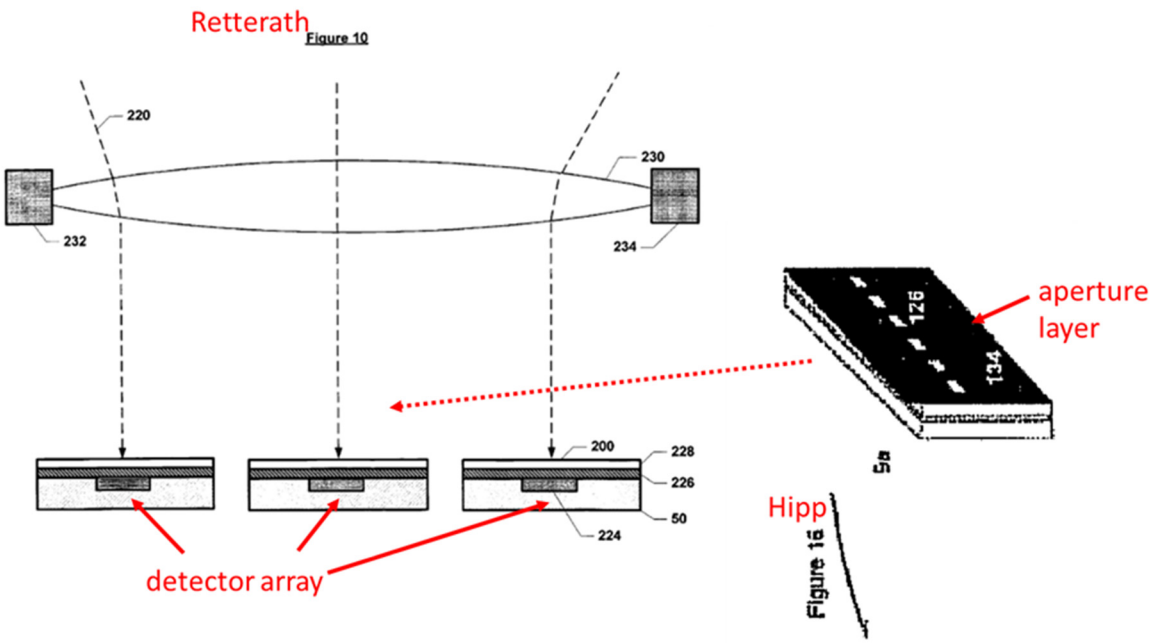

EX1003, ¶207 (EX1005, FIG. 10; EX1007, FIG. 16 (annotated)).

Retterath describes tightly controlled beam spots and precise alignment of emitters and detectors. EX1005, 9:29-44, 9:59-65, 10:47-49. Hipp complements Retterath through its teaching of a shadow mask to avoid interference between pixels in a detector array. EX1007, 21:57-67. The shadow mask of Hipp provides an enhanced mechanism to block unintended photons from reaching a pixel—an express goal of Retterath. EX1005, 9:41-59. In the resulting system, a shadow mask in accordance with Hipp would have been utilized together with Retterath's macro detector lens 230, in addition or as an alternative, to a waveguide. EX1003, ¶208.

Multiple reasons would have prompted a POSITA to implement the Retterath-Borowski combination so as to use an aperture layer (as suggested by Hipp).

First, a POSITA would have been prompted to combine Hipp with the Retterath-Borowski combination to further Retterath's objective of reduced cross-talk among the pixels of the LiDAR system. EX1003, ¶¶209-210. Signal interference was a well-known concern for multi-beam LiDAR devices, and Hipp's shadow mask was designed specifically to address it. EX1007, 21:46-56. "[I]nterference pulses arise which superimpose themselves with the desired signals which is a basic problem of the array technique." *Id*. The shadow mask solves that problem "such that only that light is transmitted which would also be incident on the active zones." *Id*., 21:57-67 ("remaining light can be avoided" such that "the unwanted light does not enter into the region of the active zones at all….").

Second, a POSITA would have been prompted to implement Hipp's suggestion with the Retterath-Borowski combination because doing so was the application of known techniques (Hipp's suggestion for a shadow mask to reduce interference) to a known system (the primary Retterath system) ready for improvement to yield predictable results (benefits articulated above). *KSR*, 550 U.S. at 417. For at least the reasons described above and the overlapping teachings in these references, the evidence here confirms that a POSITA would have had a reasonable expectation of success at adapting Hipp's shadow mask to the LiDAR system of the Retterath-Borowski combination. EX1003 ¶211. Hipp teaches that the shadow mask can be attached to or printed on the detector array, with apertures in the mask

aligned with individual detectors, and describes its mask in a system similar to the Retterath-Borowski combination. EX1007, 21:60-67, FIG. 16; EX1003, ¶¶211-212.

3. Application to Challenged Claims

(a) *Claim 6:*

The Retterath-Borowski-Hipp combination provides this Element. EX1003, ¶¶213-14. Hipp describes an aperture layer in the form of a "shadow mask" comprising a plurality of apertures (e.g., pinholes) formed over pixels in a detector array and separated by a stop region where photons are blocked. EX1007, 21:57-67 ("shadow mask … designed such that only that light is transmitted which would also be incident on the active zones [of detector array]"), FIG. 16; *see also* 22:1-23:15, 23:16-24:20, 27:5-28:3, FIG. 17.

(b) *Claim 7:*

In the Retterath-Borowski-Hipp combination, the shadow mask comprises a thin opaque structure, in accordance with Hipp. *See e.g.*, EX1007, FIG. 16 (dark area on shadow mask 134); EX1003, ¶¶215-16; *supra*, §III.B.2.

(c) *Claim 8:*

In the Retterath-Borowski-Hipp combination, the shadow mask, in accordance with Hipp, comprises four apertures (pinholes), each formed over a respective pixel of the SPAD array such that a respective optical path extends between the bulk imaging optic (i.e., macro lens 230) and the respective pixel (e.g., SPAD

macro-cell) through the respective aperture (i.e., pinhole). EX1007, 21:57-67; EX1003, ¶¶217-18; *see also supra*, Ground 1A (analysis of claim 8); §III.B.2.

(d) ***Claim 17:***

See supra, Ground 1B, Analysis of Claim 6. EX1003, ¶219.

C. GROUND 1C: Claims 1-3, 5-8, 10-13 are obvious based on Retterath, Borowski, and Pacala

The Retterath-Borowski combination renders obvious claims 1-3, 6-8, 10, 11, 14-17 for the reasons described above in Ground 1A. But even if the Retterath-Borowski combination did not provide all elements of those claims, the predictable combination of Retterath in view of Borowski and Pacala would do so.[2] EX1003, ¶¶220-33. Here, Pacala describes a LiDAR system similar to Retterath, and Pacala expressly suggests that the bulk transmitting optic should be positioned adjacent to the bulk receiving optic and furthermore describes a conventional rotating mechanism for such LiDAR devices. *Id.*

1. Pacala

Pacala describes a LiDAR device with a static base 50 that includes a motor and distributed electronics to rotate a turret 60. EX1012, [0013]. Mounted on the

[2] Where Pacala is not expressly addressed in Ground 1C, the analysis of the Retterath-Borowski combination from Ground 1A applies fully here in Ground 1C.

turret is an optical system with optoelectronic elements 70, bulk optics 80, and additional electronics, including transmitters in the form of lasers, and receivers using SPADs. *Id*., [0012]-[0014], FIGS. 1-2; EX1003, ¶¶97-99.

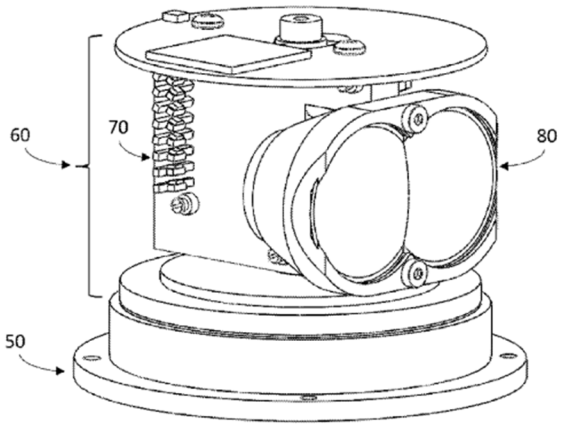

Fig. 2

EX1012, FIG. 2.

2. Predictable Retterath-Borowski-Pacala Combination

Multiple reasons would have prompted a POSITA to implement Pacala's conventional suggestions (including to utilize bulk optics positioned immediately next to one another, and a rotational mechanism for a 360-degree unobstructed field of view) with the Retterath-Borowski combination. EX1003 ¶¶222-27.

First, a POSITA would have been motivated to position the bulk optics (e.g., 80, 230) in the Retterath-Borowski combination immediately next to one another (as suggested by Pacala) to provide a more compact and low-cost LiDAR device.

EX1003, ¶223 (citing to EX1013, FIG. 2). Pacala suggests a commonly used LiDAR construction that is overall compact in size and provided low-cost optical layout with the optoelectronic elements behind bulk optics. EX1013, [0010]-[0014], FIG. 2. A POSITA would have recognized that implementing the Retterath-Borowski combination with similar compact configuration would have provided such benefits without hindering operation of the device. EX1003 ¶223.

Second, a POSITA would have been prompted implement the Retterath-Borowski combination with a rotational mechanism (as suggested by Pacala) to capture an overall wider field-of-view. *Id*. ¶224. For example, a POSITA would have been recognized from Pacala's suggestion that such a rotational design would beneficially achieve an unobstructed 360-degree rotational field of view, especially for improved performance in autonomous-vehicle navigation at the time. *Id.*; EX1013, FIG. 2, [0014].

Third, a POSITA would have been prompted to implement Pacala's conventional suggestions (describe above) with the Retterath-Borowski combination because doing so was the application of known techniques (Pacala's suggested bulk optic position and rotational mechanism in a LiDAR system) to a known system (the primary Retterath LiDAR system) ready for improvement to yield predictable results. *KSR*, 550 U.S. at 417. A POSITA would have had a reasonable expectation of success in making the combination. EX 1003 ¶225-227. Here, all the references

similarly describe conventional LiDAR configurations, including use of detector arrays that compute time-of-flight measurements. EX1005, FIGS. 6, 10, 11b; EX1013, [0013]-[0014], FIG. 2. As noted above, embodiments of Retterath describe a "solid state" device, and similar array designs were well known and implemented in rotating structures like Pacala. EX1003, ¶227 (citing to corroborating examples at EX1016, FIGS. 2C, 5A; EX1006, [0143], [0291].

3. Application to Challenged Claims

(a) *Element 1(d):*

The Retterath-Borowski-Pacala combination provides the Element. EX1003, ¶¶228-230. In the combined system, Retterath's transmit bulk optic 80 is mounted immediately next to its receiver bulk optic 230 such that they are directly and laterally adjacent to one another, as suggested by Pacala. As shown in Figure 2, Pacala provides bulk optics 80 positioned immediately next to one another.

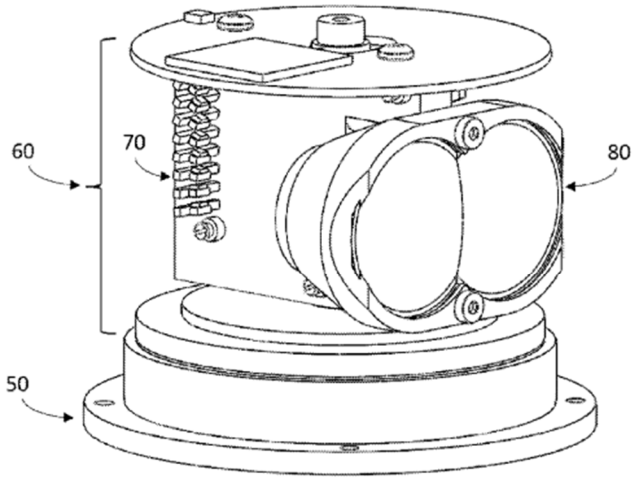

Fig. 2

EX1013, FIG. 2.

(b) ***Claim 5:***

The Retterath-Borowski-Pacala combination provides the Element. EX1003, ¶¶231-33. Pacala describes the base 50 includes a motor to drive rotation of the turret section 60, which mounts the optical system of the device. EX1013, [0013], FIG. 2.

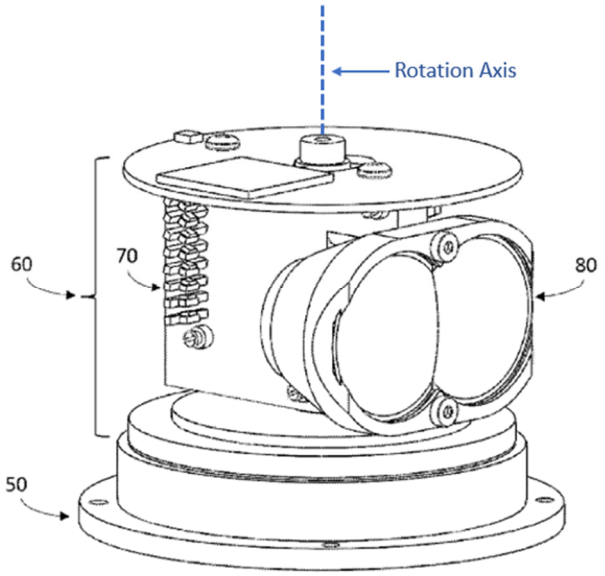

EX1003, ¶232 (EX1013, FIG. 2 (annotated)); *see also* [0003], [0012], [0014]. In the predictable combination, the optical system is mounted in a housing that rotates about a central axis (as suggested by Pacala) to achieve the known benefits articulated above. EX1003 ¶233. The prior art teaches far more than the '381 patent. *In re Epstein*, 32 F.3d 1559, 1568 (Fed. Cir. 1994) ("[T]hat appellant did not provide the type of detail in his specification that he now argues is necessary in prior art references supports the Board's finding that one skilled in the art would have known how to implement the features of the references.").

D. GROUND 1D: Claims 1-3, 6-8, and 10-17 are obvious based on Retterath in view of Borowski and Weimer

The Retterath-Borowski combination renders obvious claims 1-3, 6-8, 10, 11, 14-17 for the reasons described above in Ground 1A. But even if the Retterath-Borowski combination did not provide all elements of those claims, the predictable

combination of Retterath in view of Borowski and Weimer would do so.[3] EX1003, ¶¶234-249. Weimer describes emitter/detector configurations in systems similar to the Retterath-Borowski combination, and expressly suggests the use of VCSELs for emitters for such LiDAR systems. *Id.*

1. Weimer

Similar to Retterath, Weimer is directed to vehicle-based LiDAR devices. *Id*., FIGS. 1A-D, 4:4-6. Weimer notes that "the goal for good daytime performance has been to have the laser spot size only slightly smaller than the receivers instantaneous field of view." *Id*., 1:56-59. To achieve that goal, Weimer teaches controlling the emission pattern of individual laser beams to match the field-of-view of a corresponding detector. *Id*., 4:56-58; EX1003, ¶¶100-101. An example embodiment is shown in Figure 3A:

[3] Where Weimer is not addressed in Ground 1D, the analysis of the Retterath-Borowski combination from Ground 1A applies fully here in Ground 1D.

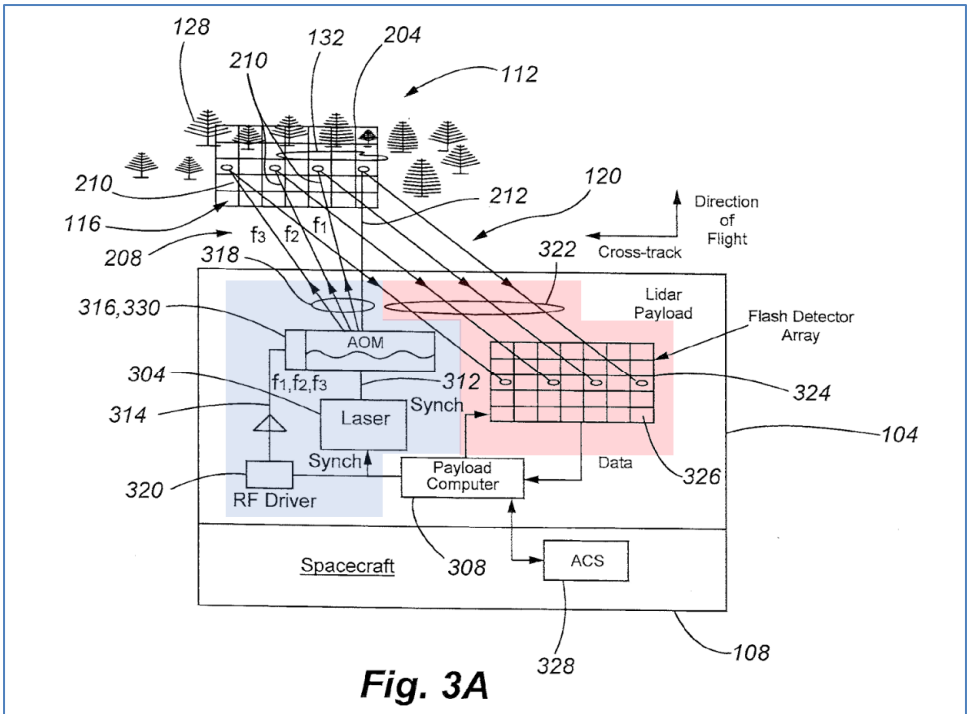

Fig. 3A

EX1003, ¶¶102-103, FIG. 3A (annotated), 10:17-45. Weimer explains that the illumination source may include a VCSEL array. *Id.*, 9:32, 11:39-41. "[I]ndividual beams 208 can be directed to cover an area corresponding to a single pixel of the detector." *Id.*, 4:56-58.

2. Predictable Retterath-Borowski-Weimer combination

Multiple reasons would have prompted a POSITA to implement the Retterath-Borowski combination in accordance with Weimer's suggestions to use VCSEL emitters and to utilize pixels (e.g., SPAD macro-cells), each with a non-overlapping field-of-view beyond a threshold distance and coincident alignment with a corresponding illumination beam from the VCSEL emitter. EX1003, ¶¶236-243.

First, a POSITA would have been prompted to match the field-of-view of each pixel to the emission region of an emitter (as suggested by Weimer) to improve signal to noise (SNR) in the pixel array in the Retterath-Borowski combination. EX1003, ¶237. Retterath describes an objective to reduce interference through tightly controlled beam spots and precise alignment of emitters and detectors, which would have been furthered by combination with Weimer's teachings. EX1005, 9:29-44; 9:59-65, 10:47-49; 11:21-25; FIG. 5a; EX1008, 1:53-61 (describing impact of field of view per detector on SNR), 4:56-58.

Second, a POSITA would have been prompted to implement Weimer's suggestions in the Retterath-Borowski combination to facilitate a high-resolution point cloud with reduced interference. EX1003, ¶238. By controlling the emission pattern of individual lasers to match the field of view of a corresponding pixel, Weimer's suggested improvement would have predictably avoided background light and facilitates improved SNR. *Id.*, 1:56-61, 4:56-58.

Third, a POSITA would have been prompted to match utilize VCSEL emitters (as suggested by Weimer) in the LiDAR system of the Retterath-Borowski combination to promote precise beam profiles and further enhance SNR. Retterath explicitly describes "vertically-constructed laser diodes" (6:15-19), and a POSITA would have looked to a reference, such as Weimer, for conventional details on the implementation of vertical laser diodes. *Id.*; 8:20-35. Indeed, VCSEL emitters

were well-known for their improved efficiency and their round/Gaussian beam profiles with well-delineated edges that are desirable for such LiDAR applications. EX1003, ¶239.

Fourth, a POSITA would have been prompted to implement Weimer's suggestions in the Retterath-Borowski combination because doing so was the application of known techniques (Weimer's use of VCSELS and emitter/pixel relationship in a LiDAR system) to a known system (the primary Retterath LiDAR system) ready for improvement to yield predictable results (benefits articulated above). *KSR*, 550 U.S. at 417. Given the overlapping nature of these LiDAR teachings, a POSITA would have had a reasonable expectation of success in making the combination. EX 1003 ¶¶240-243. The references describe systems having similar configurations, and VCSELS were known to be effective in LiDAR systems. *Id.* (citing EX1005, FIGS. 6, 10, 11b; EX1012, [0013], FIG. 2. VCSEL emitters had been proven to readily integrate in emitter arrays of LiDAR systems, like the Retterath-Borowski combination. EX1003, ¶241-43 (citing to corroborating examples in EX1016, 4:55-62; EX1017, 4:51-5:21); EX1005, FIGS. 5a, 11b, 11:21-25.

3. Application to Challenged Claims

(a) *Elements 1(c) and 14(c), Element 1(e) and 14(e), and Claim 15*

The Retterath-Borowski-Weimer combination provides each of these Elements. EX1003, ¶¶244-47; *supra*, §§III.D.1-2. The resulting device would include a plurality of pixels, each with a non-overlapping field-of-view and coincident alignment with a corresponding illumination beam, as plainly suggested by Weimer. Weimer describes an optical system comprising a laser array 306 with multiple laser sources configured to project beams 208 into the field. EX1008, FIG. 3D, 11:29-48. The laser array 306 includes a "VCSEL array" of "multiple lasers." EX1008, 11:35-46. In one embodiment, the individual beams 208 have discrete, non-overlapping emission regions as shown in FIG. 2A:

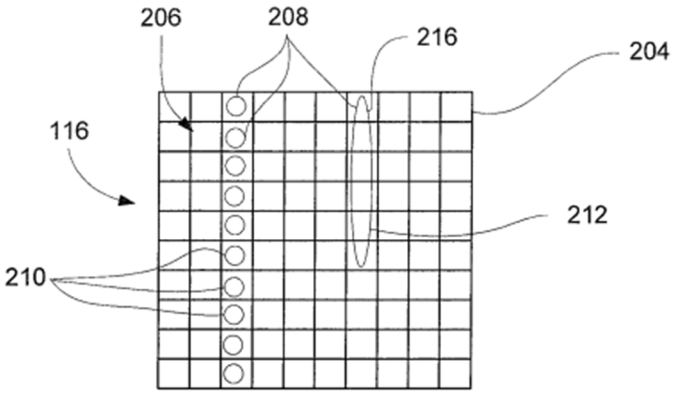

Fig. 2A

Id., FIG. 2A.

Weimer also teaches a pixel array 324, where each pixel 326 has a field-of-view that matches a corresponding beam 208 from the illumination source. *Id*., FIG. 3A, 10:17-45. "Individual beams 208 can be directed to cover an area corresponding

to a single pixel of the detector." *Id*., 4:56-58; *see also* 1:56-59, FIGS. 2B-4, 3:55-5:12, 5:13-7:16, 7:17-8:47, 8:48-10:45; EX1003, ¶246.

(b) ***Claim 12:***

The Retterath-Borowski-Weimer combination renders obvious claim 12. Weimer expressly suggests the use vertical-cavity surface-emitting lasers (VCSELs) adapted as the emitters mounted on a common substrate, as shown above in the predictable combination. EX1008, 11:35-46; *supra* §§III.D.1-2; EX1003, ¶248.

(c) ***Claim 13:***

The Retterath-Borowski-Weimer combination renders obvious claim 13. Weimer suggests implementing a single VCSEL for each optical emitter of the plurality optical emitters on the LiDAR device of the resulting combination. *Supra*, §§III.D.1-2; EX1003, ¶249.

E. Ground 1E: Retterath, Borowski, Weimer, and Pacala Render Obvious Claims 1-3, 5-8, and 10-13

The Retterath-Borowski-Weimer combination renders obvious claims 1-3, 6-8, and 10-13 as detailed in Ground 1D. *See* §III.D. Even if the Retterath-Borowski-Weimer combination did not provide all elements of those claims, the predictable combination of Retterath in view of Borowski, Weimer, and Pacala would do so, especially in light of Pacala's suggestions for positioning lenses "adjacent to" one another in a compact arrangement and for the rotational configuration/benefits. *See* §III.C.2. A POSITA would have been motivated by Pacala to further

modify the Retterath-Borowski-Weimer combination, with a reasonable expectations of success, for the same reasons articulated above in Ground 1C. *Supra*, §III.C.2-3; EX1003, ¶250.

F. Ground 1F: Retterath, Borowski, Weimer, and Hipp Render Obvious Claims 6-8, 17

Even if the Retterath-Borowski-Weimer combination did not provide all elements of claims 6-8, and 17 (which it does), the predictable combination of Retterath-Borowski-Weimer-Hipp would do so. *Supra* §III.B. A POSITA would have been motivated by Hipp to further modify the Retterath-Borowski-Weimer combination, with a reasonable expectations of success, for the same reasons articulated above in Ground 1B. *Id.*; EX1003, ¶251.

G. Ground 1G: Retterath, Borowski, Weimer, Hipp, and Pacala Render Obvious Claims 6-8, 17

Even if the Retterath-Borowski-Weimer-Hipp combination did not provide all elements of claims 6-8, 17, the predictable combination of Retterath in view of Borowski, Weimer, Hipp, and Pacala would do so. *See* §§III.C.2-3. A POSITA would have been motivated by Pacala to further modify the Retterath-Borowski-Weimer-Hipp combination, with a reasonable expectations of success, for the same reasons articulated above in Ground 1C. *Id.*; EX1003, ¶252.

H. GROUND 2A – Claims 1-3, 10-16 are obvious based on Imai and Higashi

1. Imai

Imai describes a "scanning laser radar" for "emitting light and detecting a distance to the object by … receiving reflected light (scattered light) from the object." EX1009, [0027], FIG. 1, [0029] ("The laser radar 100 is provided with an LDA (laser diode array) including a plurality of LDs (laser diodes) as a light source"), [0030]; EX1027, [0009]-[0011].

FIG. 2A (annotated below) "illustrates the light projecting optical system 20 and the synchronization system 50." *Id.*, [0031].

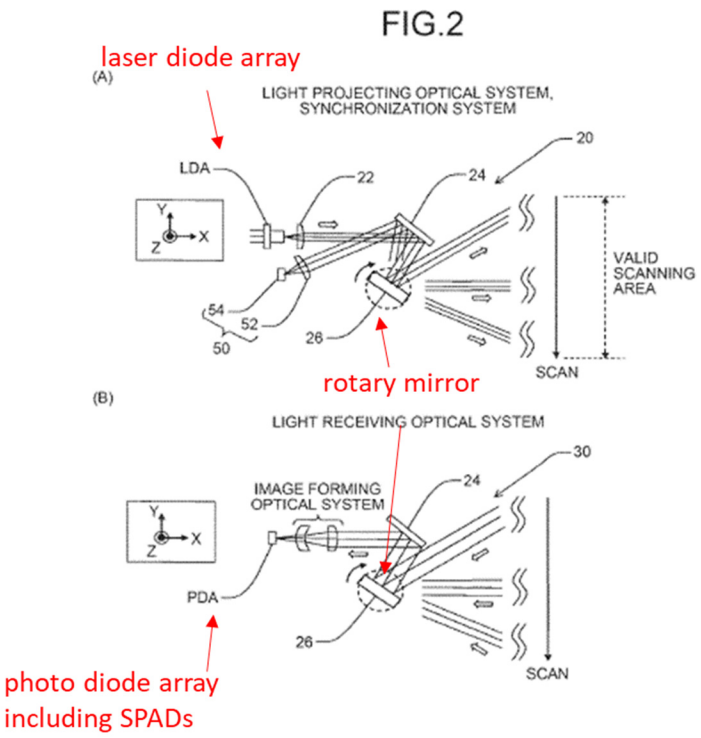

EX1003, ¶¶108-111 (EX1009, FIGS. 2A, 2B (annotated)); EX1027, FIGS 2A, 2B.

"The light receiving optical system 30 includes the rotary mirror 26 which reflects the light projected from the light projecting optical system 20 to be reflected

(scattered) by the object located in the valid scanning area, the reflecting mirror 24 which reflects the light from the rotary mirror 26, and an image forming optical system arranged on the optical path of the light from the reflecting mirror 24 to form an image of the light on a PDA (photo diode array) as an optical detector." *Id.*, [0037]; EX1027, [0018].

Imai teaches "a SPAD (single photon avalanche diode) being used as a Geiger mode APD …. as a light receiving element … for measuring time (measuring distance)" because such detectors have "a higher sensitivity than that of the PD are advantageous in detection accuracy and detection distance." *Id.*, [0048]; EX1027, [0029]; EX1003, ¶¶112-114.

Imai employs "the LDA (light source) including a plurality of LDs (light emitting units) arranged in the Z-axis direction (direction corresponding to the sub-scanning direction), the rotary mirror 26 (deflector) which deflects the light from the LDA, and the PDA (optical detector) including a plurality of PDs (light receiving units) arranged in the direction corresponding to the sub-scanning direction so as to correspond to a plurality of LDs to receive the light deflected by the rotary mirror 26 to be reflected by the object." EX1009, [0072]; [0060-65], [0067], [0036], [0047], FIGS. 4A, 5, 7 (same); EX1027, [0017]; [0028]; [0053]; [0041]-[0048];; FIGS. 4A, 5, 7; EX1003, ¶115.

2. Higashi

Higashi teaches "[a] radar device 1 [including] a light source 2, a one-dimensional scanner 3, a scanning control unit 4, a light detection unit 5 and a processing unit 6." EX1011, [0015], FIG. 1; EX1003, ¶¶117-121.

"[T]he reflected light is irradiated onto the light receiving surface RP on which a plurality of pixels 26 are arranged in a two-dimensional matrix [of pixel array 21]." EX1011, [0065], [0066]. Each pixel of its pixel array 21 includes multiple SPAD cells. *Id.*, FIG. 4 (annotated below), [0027] ("the pixel 26 comprises four light receiving elements 51 and a readout circuit (Read Out Circuit) 52 provided corresponding to each of the four light receiving elements 51. The light receiving element 51 of this embodiment is a single photon avalanche diode (SPAD).").

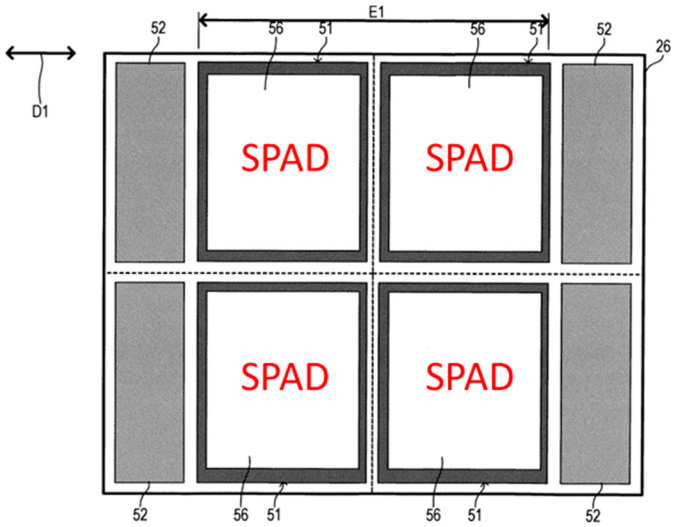

EX1003, ¶¶122 (EX1011, FIG. 4 (annotated))

3. Predictable Imai-Higashi Combination

The evidence here confirms that a POSITA would have been prompted to implement Higashi's suggestions in Imai's system in at least two ways—both of which

would have achieved known benefits. First, a POSITA would have been prompted to utilize a bandpass "filter" (as suggested by Higashi) in Imai's system. In the resulting combination, the received light along the optical path of the pixels would pass through the bandpass filter to advantageously pass through the operational wavelength of the laser light and filter out other interference. EX1011, [0086]; EX1003, ¶¶253-55.

Second, to the extent Imai does not already disclose the use of multiple SPAD cells for each detector pixel (which Petitioner contends it does for reasons detailed below), a POSITA would have been prompted to implement such a conventional multi-SPAD pixel (as suggested by Higashi) to achieve known advantages. *Id.* In the combined system, multiple SPADs (e.g., four) would be utilized in each "PD" of Imai, in accordance with Higashi's suggestion. EX1009/EX1027, FIG. 11; EX1011, FIG. 4; EX1003, ¶¶255.

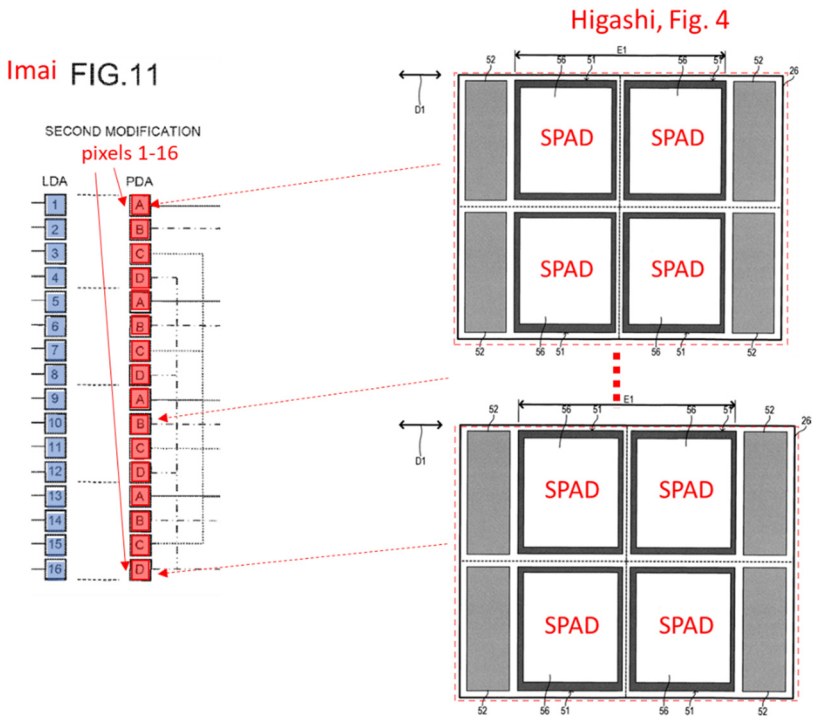

EX1003, ¶¶255 (EX1009, FIG. 11, EX1011, FIG. 4 (annotated)). To be clear, the predictable combination is not relying on bodily incorporation of Higashi's components, but its suggestions related to its bandpass filter and multi-SPAD detectors, which would have been predictably implemented in Imai's system. *Intel*, 61 F.4th at 1379-80 ("not an automaton").

Multiple reasons would have prompted a POSITA to implement Higashi's suggested improvements in Imai's system. ***First***, turning to Higashi's suggested bandpass filter, a POSITA would have been prompted to implement Imai's system to include a bandpass filter for the received light (as suggested by Higashi) so as to advantageously pass through only light of the operational wavelength of the corresponding laser emitter and "eliminate the effect of background light." EX1011,

[0086]; EX1003, ¶256. In doing so, the resulting combination would advantageously filter out interfering light sources along the optical path of each of the detector pixels, thereby improving accuracy, improving the signal-to-noise ratio, and reducing the likelihood of false detections at the detector pixel. *Id.*

Second, turning to Higashi's suggesting for using multiple SPADs at each pixel, a POSITA would have been motivated to arrange multiple SPADs in each of Imai's detector pixels (e.g., pixels 1-16 in Imai's FIG. 11) so that "erroneous detection of pixels[] can be reduced" and improved accuracy is achieved. EX1011, [0071]-[0072]; EX1003, ¶257. Indeed, doing so would have further improved Imai's objective of achieving "higher sensitivity." EX1009, [0048]. Higashi's suggested solution would have predictably provided such benefits to Imai's system while also account for characteristics of SPADs. EX1011, [0075], FIG. 4; EX1003, ¶257 (describing the known benefits averaging of multiple SPADs and citing a corroborating example at EX1006)).

Third, a POSITA would have recognized that applying Higashi's suggestion for using multiple SPADs within each of Imai's detector pixels would have led uninterrupted performance of each pixel even when an individual diode is quenched (e.g.., due to an errant photon or otherwise not resetting). EX1003, ¶¶258 (describing continued detection ability of multi-SPAD pixel even if one pixel is quenching); EX1011, [0071] ("possibility of erroneous detection" by multiple SPADs "at the

same time is low"). Moreover, doing so would have furthered Imai's objective of "inhibiting the increase of detection obtaining time" (EX1009, [0006]-[0007]; EX1027, [0003]-[0004]), because multi-SPADs facilitate high speed data processing as the multiple SPADs take turns to receive the incoming photons.

Fourth, a POSITA would have been prompted to Higashi's suggested improvements in Imai's system because doing so was simply the application of known techniques (e.g., use of multi-SPAD pixels and bandpass filters in a LiDAR system) to a known system (Imai's LiDAR system that utilized SPAD detectors) ready for improvement to yield predictable results (benefits articulated above). *KSR*, 550 U.S. at 417. Given the predictable and analogous nature of these two LiDAR references, a POSITA would have had a reasonable expectation of success in making the proposed combination, especially where: (1) both Imai and Higashi contemplate multiple subpixel elements for each detector pixel, (2) Higashi provided the added detail of a readout circuit for each multi-SPAD pixel, and (3) Higashi describes the performance benefits of a bandpass filter. EX1011, FIG.5, [0031-40], [0086]; EX1003, ¶259. Indeed, implementing bandpass filters and multi-SPAD detector pixels was commonly suggested for a variety of LiDAR systems at the time; it was ubiquitous. EX1003, ¶259 (citing to corroborating examples in EX1006, Abstract; [0003]; [0014]; [0045]; [0154] and EX1029, [0062]).

4. Application to Challenged Claims

(a) ***Element 1(a):***

To the extent the preamble is deemed limiting, the Imai-Higashi combination provides the recited system. *Supra*, §§III.H.1-3. Imai describes a "scanning laser radar" for "emitting light and detecting a distance to the object by … receiving reflected light (scattered light) from the object." EX1009, [0027], [0029-30], [0032]-[0039], [0040], [0041]-[0047], [0051-54], [0086], [0101], [0115], FIG. 1; EX1011, FIG. 1, [0015] (similar system); EX1003, ¶¶260-61.

(b) ***Element 1(b):***

The Imai-Higashi combination provides this Element. EX1003, ¶262. Imai discloses "a coupling lens 22 arranged on an optical path of the light from the LDA." EX1009, [0032]; [0033]-[0034]; EX1027, [0013]-[0015]. Like the bulk transmitting optic described by the '381 patent, the coupling lens 22 of Imai receives light from multiple emitters (e.g., LDA) and transmits it to the surrounding environment. *Id.*; EX1001, FIG. 1.

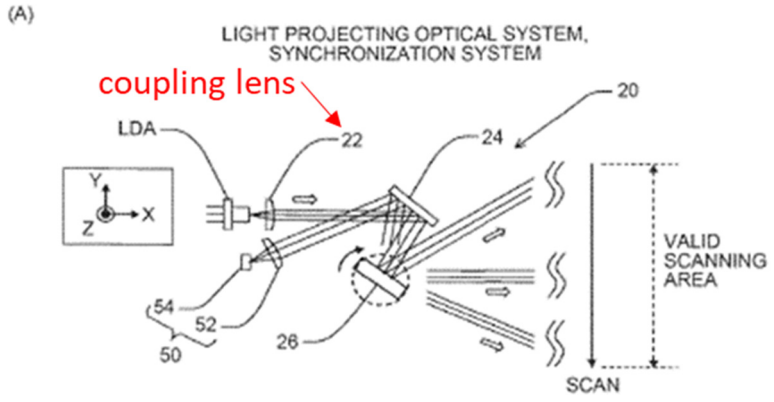

EX1003, ¶263 (EX1009, FIG. 2A (annotated))

(c) ***Element 1(c):***

The Imai-Higashi combination provides this Element. EX1003, ¶264. Imai describes a plurality of optical emitters provided by a plurality of laser diodes. EX1009, [0029] ("The laser radar 100 is provided with an LDA (laser diode array) including a plurality of LDs (laser diodes) as a light source."). Imai's optical emitters are arranged behind the coupling lens 22 to project light through the coupling lens 22 into a field external to the optical system. EX1009, [0032-34]; *see also* [0036], [0047], [0060], [0066]-[0083], [0085], FIGS. 2A, 4A, 5-6, 7A, 7B; *supra* 1(b). The projected light from the LDA is a form of electromagnetic radiation at an operating wavelength. EX1003, ¶265.

Imai teaches outputting the projected light according to an illumination pattern that comprises a plurality of non-overlapping emission regions. A "light emitting area of each LD of the LDA" are non-overlapping (EX1009, [0029], [0060]), and provides nonoverlapping irradiation ranges of each LD in the LDA in FIGS. 5, 7A, 8, 10-11, 13-14. EX1009, [0060-65], [0067], [0072]; EX1003, ¶266; *see also*, *infra*, analysis of 1(e) (describing examples of non-overlapping emission regions); EX1027, [0013]-[0020]; [0028]-[0029]; [0041]-[0048]; [0053]; [0066].

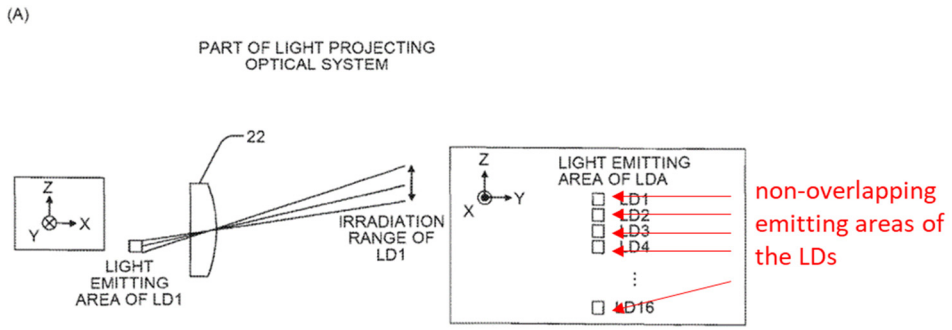

FIG.5

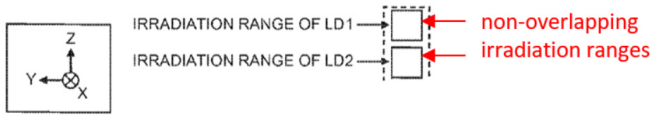

EX1003, ¶266 (EX1009, FIG. 4A (annotated); FIG. 5 (annotated); FIG. 11).

(d) ***Element 1(d):***

The Imai-Higashi combination provides this Element. EX1003, ¶267. Imai describes a bulk imaging optic provided by an imaging lens. *Id.* As depicted in FIG. 2C (reproduced below), coupling lens 22 of the projection optical system 20 and imaging lens on the light receiving optical system 30 are adjacent to each other along the "Z-axis" direction, similar to the embodiment of the '381 patent. *Compare*, EX1009, FIG. 2C *with* EX1001, 11:11-13 adjacent and offset laterally and/or vertically"), FIGS. 1-2; *see also* EX1003, ¶268; EX1009, [0041], [0038]-[0039]; EX1027; [0019]-[0022].

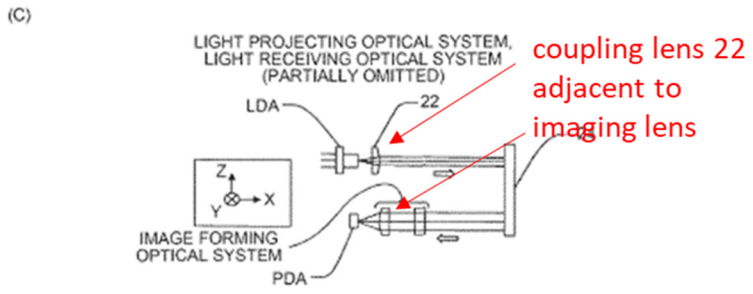

EX1003, ¶268 (EX1009, FIG. 2C (annotated))

(e) ***Element 1(e):***

The Imai-Higashi combination provides Element 1(e) in at least two independent manners. *Supra*, §§III.H.1-3. <u>In a first manner</u>, Imai teaches that each photo diode (PD) can be in the form of "a SPAD" ([0048]), and Imai's embodiment shown in FIG. 10 plainly depicts that each detector pixel includes four such PD elements: Pixel 1 (PD1-PD4), Pixel 2 (PD5-PD8), Pixel 3 (PD9-PD12), and Pixel 4 (PD13-PD16). EX1009, [0096]-[0098], [0099] ("corresponds to"); FIG. 10.

FIG.10

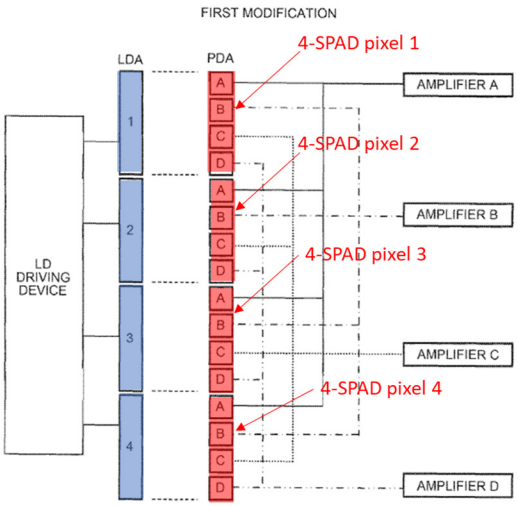

EX1003, ¶¶269-70 (EX1009, FIG. 10 (annotated))

In other words, Imai contemplates four pixels, with each pixel including four SPADs. EX1003, ¶271. The four pixels (including all of the detector elements PD1-PD16 in the array (PDA)) are arranged behind the lens of the image forming system (*see e.g.*, FIGS. 4B and 2B-C, [0037]-[0041] and [0061]). *Id.*

Imai indicates that each 4-SPAD pixel has a field of view coincident with an emission region of a corresponding LD in the LDA. EX1003, ¶272. "An irradiation range of the LD1 corresponds to light receivable ranges of the PD1 to PD4, the irradiation range of the LD2 corresponds to the light receivable ranges of the PD5 to PD8, the irradiation range of the LD3 corresponds to the light receivable ranges of the PD9 to PD12, and the irradiation range of the LD4 corresponds to the light receivable ranges of the PD13 to PD16." EX1009, [0099]. Thus, "light from the LD1 is received by the PD1 to PD4, the light from the LD2 is received by the PD5 to PD8, the light from the LD3 is received by the PD9 to PD12, and the light from the LD4 is received by the PD13 to PD16." *Id.*, [0100], [0101]; FIG. 10 (annotated above). As such, Imai's configuration is similar to the embodiment described by the '381 patent. EX1001, 5:26-34; 11:16-19.

Each SPAD pixel detects photons emitted from its corresponding LD and received through the bulk imaging optic after being reflected from surfaces within the field. EX1009, [0077]; [0109]; [0110-12]; EX1003, ¶273; EX1027, [0018]-[0022]; [0041]-[0042]; [0077]-[0082].

In a second manner, the Imai-Higashi combination provides Element 1(e) based on Imai's embodiment shown in FIG. 11 and Higashi's suggested improvement for using multiple SPADs at each detector pixel. As explained *supra* §§III.H.1-3 and annotated below, the predictable combination includes 16 pixels arranged behind the bulk imaging optic, and each of the 16 pixels includes a multi-SPAD array (as suggested by Higashi) to achieve the benefits noted in Higashi and articulated by Dr. Shanley. EX1009, FIG. 11; EX1011, FIG. 4.

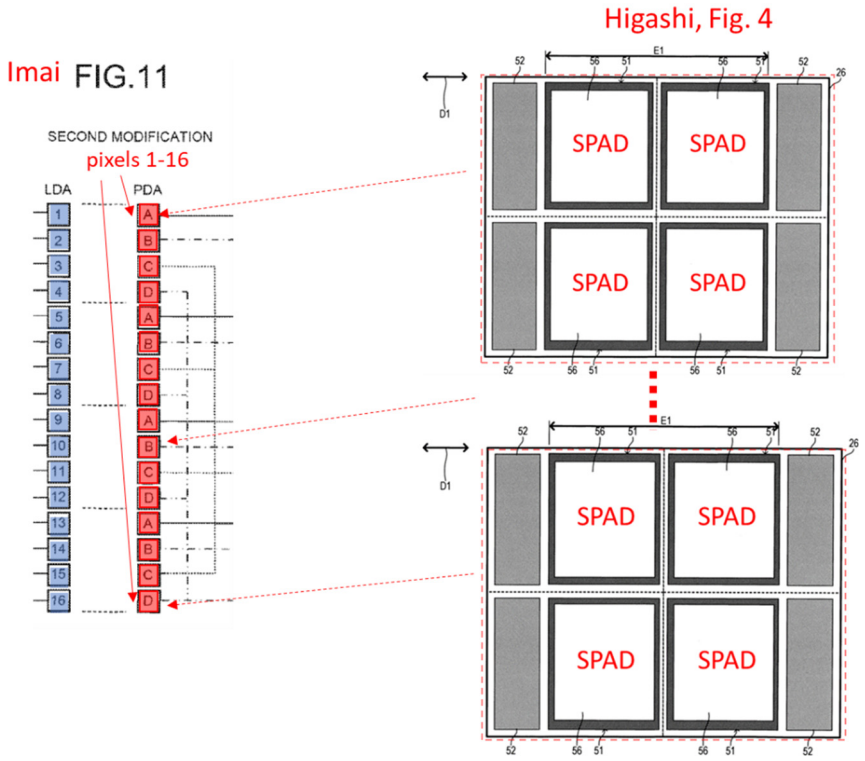

EX1003, ¶274 (EX1009, FIG. 11(partial), EX1011, FIG. 4 (annotated))

Each pixel (pixels 1-16) has a field of view coincident with an emission region of a corresponding LD in the LDA (LD1 to LD16). EX1003, ¶275. Imai explicitly states that, not only are "the number" of LDs and that of PDs in FIG. 11 the same,

but also that "the LDs and PDs ***one-to-one correspond to each other***." EX1009, [0125] ("and" correspond to each other).

Moreover, beyond Imai's explicit description for the one-to-one correspondence, a POSITA would have been motivated to implement the 16 pixels to each have a field of view coincident with an emission region of a corresponding LD. Regarding "relationship between the irradiation range of each LD on the LDA and the light receivable range of each PD of the PDA," Imai describes examples of the correspondence between the light receivable range of a pixel and the emission region of a corresponding emitter. *See e.g.*, EX1009, [0062-64] (discussing "light receivable range of each PD" and "the corresponding irradiation ranges of [emitters]") in FIG. 5), [0067-70] (discussing FIGS. 7A and 7B depict "irradiation areas of [emitters] correspond to a light receivable range of [a corresponding PD]")). A POSITA would have been motivated to implement the LDs and the pixels 1-16 to achieve a one-to-one correspondence (such that each of pixels 1-16 was coincident with a corresponding one of the LDs) in order to provide a balanced tradeoff of detection time and detection distance. EX1009, [0067-70]; EX1003, ¶¶274-276. Ultimately, a POSITA would have recognized each of pixels 1-16, as provided by the resulting combination, has a light receivable range matched with the irradiation area of a corresponding LD so that light emitted by the corresponding LD is received by the matching pixel. EX1003, ¶276.

In the predictable combination, the SPADs for all of the pixels in the array (PDA) are operable to detect photons emitted from its corresponding optical emitter and received through the bulk imaging optic after being reflected from surfaces within the field. EX1009, FIGS. 4B and 2B-C, [0037]-[0041] and [0061]); EX1003, ¶277; *supra* §§III.H.1-3; EX1027, [0018]-[0022]; [0043]-[0053], [0106].

(f) ***Element 1(f):***

The Imai-Higashi combination provides this Element. EX1003, ¶¶278-79. Even if Imai alone does not expressly describe a bandpass filter, the predictable combination would include a bandpass filter (as suggested by Higashi) so as to advantageously achieve "a bandpass filter corresponding to the wavelength of the pulsed laser light may be provided to eliminate the effect of background light." EX1011, [0086]; EX1003, ¶279; *supra* §III.H.3. Higashi's suggested bandpass filter would predictably operate as an optical filter disposed in an optical path of the pixels of the Imai-Higashi combination to effectuate its purpose of allowing a set of wavelengths of electromagnetic radiation, including the operating wavelength, to pass through while blocking electromagnetic radiation outside the set of wavelengths from reaching the pixels. *Id.*

(g) ***Claim 2:***

Imai teaches "a scanning laser radar … for detecting whether there is an object

… by emitting light and detecting a distance to the object and … by receiving reflected light (scattered light) from the object," providing three-dimensional distance data. EX1009, [0027], [0040] ("a distance calculating unit 46 … calculates the distance to the object from time difference between rise timing of the LD driving signal and detection timing of the light reception signal by the PD output detecting unit 44'), [0048], [0051-54]; [0078-81]; *see also* EX1011, [0020]; EX1003, ¶¶280-81; EX1027, [0009]; [0021]; [0029]

(h) ***Claim 3:***

The Imai-Higashi combination provides this Element of claim 3. EX1003, ¶282. Imai demonstrates its optical emitters (e.g., LDs) are arranged in a first arrangement and its pixels (e.g., PDs) are arranged in a second arrangement, proportional to the first arrangement. For example, according to the first predictable manner, Imai provides 4 LDs in a first arrangement and 4 pixels (each including 4 SPADs) in a second arrangement proportional to the first arrangement. EX1009, FIG. 10; *supra*, Ground 2A, Analysis of Element 1(e). According to the second predictable manner, Imai provides 16 LDs in a first arrangement and 16 pixels (each including 4 SPADs) in a second arrangement, proportional to the first arrangement. *Id.*, FIG. 10, *supra*, Ground 2A, Analysis of Element 1(e). EX1003, ¶283.

(i) ***Claim 10:***

The Imai-Higashi combination provides this Element of claim 10. EX1003, ¶284. For each of the two predictable manners for the multi-SPAD pixels articulated above (*supra*, Analysis of Element 1(e)), Higashi discloses a conventional pixel processing unit 31 connected to instances of readout circuit 52 "corresponding to each of the four light receiving elements 51 [of pixel 26]." EX1011, [0027]-[0028], [0041]-[0047] (explaining pixel processing unit 31 in FIG. 6 shown below), FIG. 4 (illustrating readout circuit 52 on pixel 26); *see also* [0031-40] ("the readout circuit 52 comprises a quench resistor 61, a digital transducer 62, an inverter 63, a buffer 64, and a selector 65 [as shown in FIG. 5]"); EX1003, ¶¶285-86.

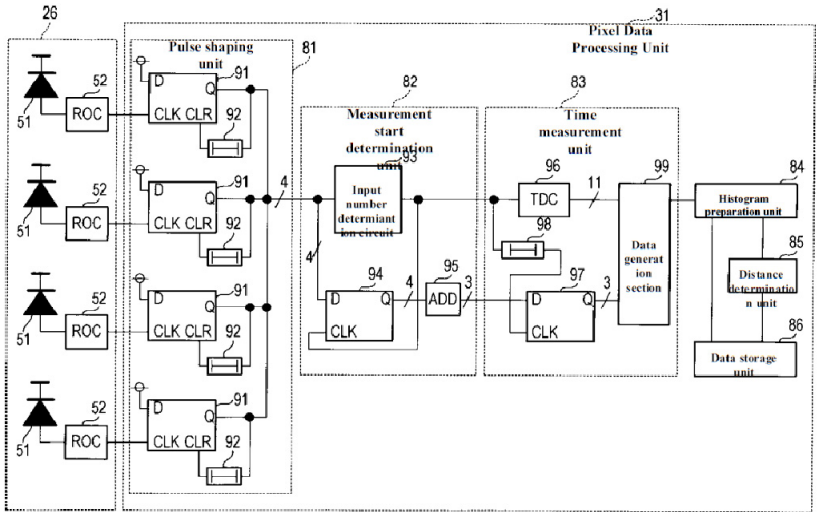

EX1011, FIG. 6 (showing pixel processing unit 31 and readout circuit 52). For the reasons articulated above, a POSITA would have been motivated to utilize a signal processing circuit (as suggested by Higashi) to beneficially achieve the SPADs purpose of detecting the reflected optical energy ([0028] ("into a digital pulse signal"))

and to then "determine the distance to an object." EX1011, [0056], [0076], [0041]; EX1003, ¶286.

(j) ***Claim 11:***

The Imai-Higashi combination provides this Element of claim 11. EX1003, ¶¶287-88. In accordance with Higashi, the signal processing circuit (*supra*, Claim 10 Analysis) is configured to count incident photons within a sampling period for the plurality of pixel detectors. Higashi describes that, each instance of readout circuit 52 "converts the signal output by the [corresponding] light receiving element 51 into a digital pulse signal when the laser light enters the light receiving element 51 [of pixel 26]." *Id.*, [0028]. The pixel processing unit 31, in conjunction with the instances of readout circuit 52, operate to count incident photons within a sampling period for the pixels of the combination system. *Id.*, [0041-44] ("time measurement unit 83, [and others]), [0045-53] ("time measurement unit 83 that includes a Time to Digital Converter (TDC) 96, a plurality of D-shaped flip-flop circuits 97 [and others]", "the D-type flip-flop circuit 97 outputs a digital signal (light reception number signal) indicating the count result."); [0055] ("the number of light receptions detected by the light receiving element 51 of the pixel 26"); EX1003, ¶288.

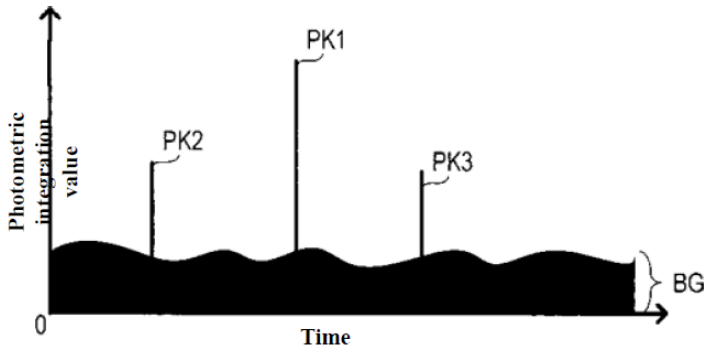

EX1011, at FIG. 7 (histogram of photon counts)

(k) ***Claim 12:***

The Imai-Higashi combination provides this Element of claim 12. EX1003, ¶¶289-90. Imai teaches "a plurality of VCSELs (surface emission lasers) is one-dimensionally arranged in the sub-scanning direction [Z-axis on FIG. 6]." EX1009, [0138]. Based on Imai's teaching that "the VCSEL (surface emission laser) may be used as a semiconductor laser," a POSITA would have readily recognized that the plurality of VCSELs are mounted on a common substrate. *Id.*, [0139] (noting VCSEL capable of "high density integration"); EX1003, ¶90; EX1027, [0119]-[0120].

(l) ***Claim 13:***

The Imai-Higashi combination provides this Element of claim 13. EX1003, ¶¶291-92. As discussed above under claim 11, Imai teaches "a plurality of VCSELs (surface emission lasers) is one-dimensionally arranged in the sub-scanning direction [Z-axis on FIG. 6]." EX1009, [0138]. Based upon Imai's one-dimensional arrangement as depicted in the "Z" axis on FIG. 5, a POSITA would have recognized

each LD comprises a VCSEL. EX1003, ¶292 (further noting high power capability of VCSEL was known and citing of a corroborating example in EX1025)).

(m) ***Element 14(a):***

Supra, Ground 2A, Analysis of Element 1(a). EX1003, ¶¶293-95.

(n) ***Element 14(b):***

Supra, Ground 2A, Analysis of 1(b). EX1003, ¶296.

(o) ***Element 14(c):***

Supra, Ground 2A, Analysis of 1(c). As discussed above, Imai describes that each emission zone represents a spot (e.g., emitting area) in a field ahead of the optical system. *See e.g.*, EX1009, [0013] ("one light emitting area" of LD1 in FIG. 4A); EX1003, ¶297 (confirming that Imai uses "emitting area," "irradiation range," and "irradiating area" interchangeably at EX1009, ([0013] (FIG. 4), [0039] (FIG. 2C), [0063-65] (FIG. 5), [0099-0101] (FIG. 10))); EX1027, [0006], [0020].

(p) ***Element 14(d):***

Supra, Ground 2A, Analysis of 1(d). EX1003, ¶298.

(q) ***Element 14(e):***

Supra, Ground 2A, Analysis of 1(e). In both predictable manners articulated above, the pixels correspond in number to the optical emitters. EX1003, ¶299.

(r) ***Element 14(f):***

Supra, Ground 2A, Analysis of 1(f). EX1003, ¶300.

(s) ***Element 14(g):***

Supra, Ground 2A, Analysis of claim 2; *see also*, Elements 1(a)-1(f). EX1003, ¶301.

(t) ***Claim 15:***

In the Imai-Higashi combination (detailed above), the laser diodes are configured to illuminate substantially only emission regions in the field that can be detected by the plurality of pixels in the optical system. *Supra*, Ground 2A, Analysis of 1(e); EX1003, ¶302.

(u) ***Claim 16:***

In the Imai-Higashi combination, each pixel is operable to output a signal corresponding to a count of photons incident on the pixel within one sampling period, which is processing by the signal processing circuit. *Supra*, Analysis of Claims 10-11; EX1003, ¶¶303-04.

I. GROUND 2B – Claims 6-8, and 17 are obvious based on Imai in view of Higashi and Grzesik

1. Overview of Grzesik

Grzesik teaches "avalanche photodiodes (APDs) operating in Geiger-mode (GM) can be employed to detect single infrared photon arrival with sub-nanosecond accuracy." EX1012, 1:19-21; EX1003, ¶¶123-124. Grzesik suggests an improvement to reduce "optical cross talk" within the array of photodiodes. *Id.*, 1:53-54 ("Some of these charge carriers lose energy by emitting . . . a spectrum of photons, which can be absorbed and detected at other photodiodes in an array of photodiodes

disposed in the substrate [known as secondary detection]").

"[T]o reduce optical coupling between the photodiodes in the array," Grzesik discloses "one or more cross talk absorption layers 60 … disposed on … the photodiode array substrate 12." EX1012, 4:53-64, FIG. 3 (annotated below). "The cross talk absorption layer 60 is provided in a pattern that includes open, exposed surface regions or apertures 62 for allowing input radiation to enter the substrate and each photodiode 14, 16, 18" and "surface regions 64 which cover the substrate 12 with absorption material." *Id.*, 4:65-5:6, 5:11-32.

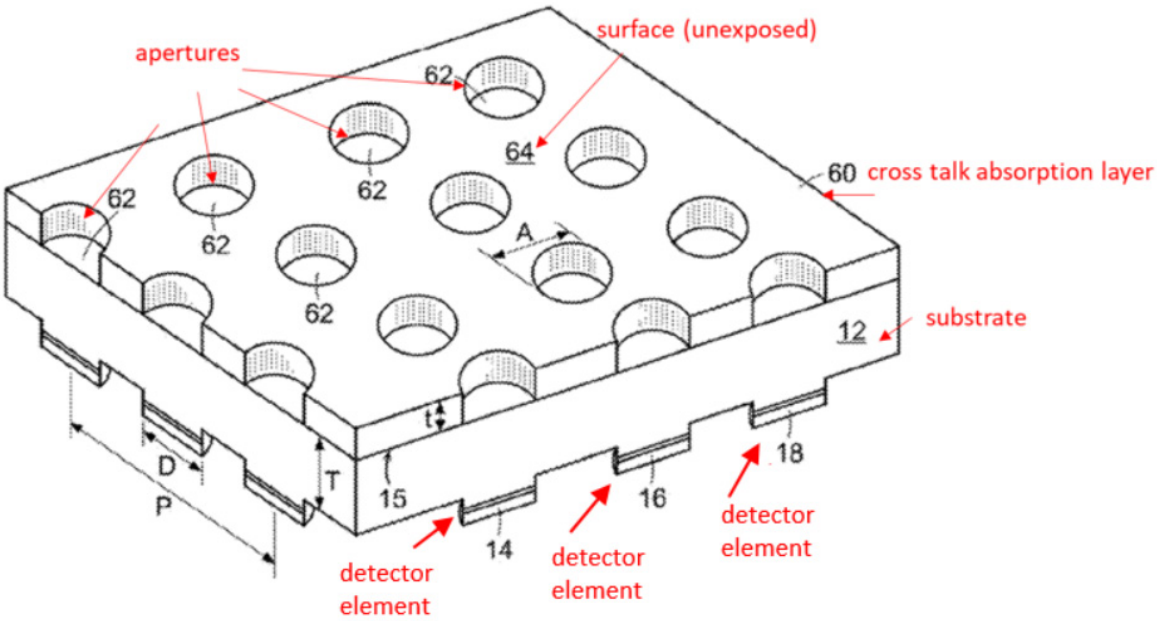

FIG. 3

EX1003, ¶125 (EX1012, FIG. 3 (annotated))

2. Predictable Imai-Higashi-Grzesik combination

Multiple reasons would have prompted a POSITA to implement an aperture

layer (as suggested by Grzesik's cross talk absorption layer) in the Imai-Higashi combination (detailed above in Ground 2A).

First, a POSITA would have been motivated to implement an aperture layer (as suggested by Grzesik) between the imaging forming optical system and the SPAD pixels of the Imai-Higashi combination to advantageously reduce optical cross talk. EX1012, 4:65-5:6, 5:11-32 ("at least partially suppress … the internal reflection of secondary radiation … while the apertures 62 allow transmission of primary external photons … to photodiodes in the photodiode array."); EX1003, ¶¶305-07. Indeed, Imai describes an objective of improving resolution in a detection range in a sub-scanning direction (EX1009, [0006]-[0007], which would have been furthered by Grzesik's suggestion of an aperture layer to reduce cross talk interference between pixels because more pixels can be used in a specified detection area. *Id.*

Second, a POSITA would have prompted to implement Grzesik's suggestion with the Imai-Higashi combination because doing so was the application of known techniques (Grzesik's suggested improvement for a cross talk absorption layer to reduce secondary detection) to a known system (the primary Imai LiDAR system) ready for improvement to yield predictable results (benefits articulated above). *KSR*, 550 U.S. at 417. For at least the reasons described above and the overlapping teachings in these references, the evidence here confirms that a POSITA would have had a reasonable expectation of success at adapting Grzesik's cross talk absorption layer

to the scanning laser radar of the Imai-Higashi combination. EX1003, ¶308. Grzesik demonstrates known benefits of implementing a cross talk absorption layer disposed on the detector array with apertures of the cross talk absorption layer aligned with individual detectors, and describes using its cross talk absorption layer on Geiger-mode APDs (e.g., SPADs) as used by the Imai-Higashi combination. EX1012, FIG. 3, [0003]-[0004], *supra* §III.I.1; EX1003, ¶308.

3. Application to the challenged claims

(a) *Claim 6:*

The Imai-Higashi-Grzesik combination provides this Element. EX1003, ¶309. Grzesik describes an aperture layer ("cross talk absorption layer") comprising a plurality of apertures formed over pixels in a detector array and separated by a stop region ("surfaces 64") where photons are blocked. EX1012, FIG. 3, 4:53-5:6, 5:11-32; EX1003, ¶309. As articulated above, in the resulting combination, the aperture layer (suggested by Grzesik) would have been predictably positioned between the imaging forming optical system and the SPAD pixels of the Imai-Higashi combination.

(b) *Claim 7:*

In the context of claim 6, Grzesik discloses that the cross talk absorption layer should include a thin opaque structure. EX1012, 4:53-5:6, 5:11-32 ("region 64 [FIG. 3] … suppress … internal reflection of secondary radiation"); EX1003, ¶¶310-11; *supra*, III.I.1-2.

(c) ***Claim 8:***

In the context of claim 6, the aperture layer suggested by Grzesik comprises at least four instances connoted as "apertures 62," each formed over a respective pixel of the SPAD array such that a respective optical path extends between the bulk imaging optic (i.e., image forming optical system) and the respective pixel (e.g., SPAD macro-cell) through the respective instance of aperture. EX1003, ¶¶312-13; *supra*, III.I.1-2.

(d) ***Claim 17:***

Supra, Ground 2B, Analysis of claim 6. EX1003, ¶314.

J. GROUND 2C – Claim 5 is obvious based on Imai in view of Higashi and Pacala

The predictable combination of Imai in view of Higashi and Pacala provides claim 5, especially in light of Pacala's suggestion for rotating mechanism the achieves a compact configuration with a 360-degree field of view.[4] EX1003, ¶¶315-322; *see supra* §III.C.1 (description of Pacala).

1. Predictable Imai-Higashi-Pacala Combination

[4] Where Pacala is not addressed Ground 2C, the Ground 2A analysis applies fully here in Ground 2C.

Multiple reasons would have prompted a POSITA to implement Pacala's conventional suggestion (a rotational LiDAR mechanism with a compact arrangement) with the Imai-Higashi combination.

First, a POSITA would have been motivated prompted implement the Imai-Higashi combination with a rotational mechanism (as suggested by Pacala) to capture an overall wider field-of-view. EX1003, ¶¶317-18. A POSITA would have been recognized from Pacala's suggestion that such a rotational design would beneficially achieve a 360-degree rotational field of view, especially for performance in autonomous-vehicle navigation at the time. EX1003, ¶318; EX1013, FIG. 2, [0014]. Implementing Pacala's suggested mechanical rotation of the Imai-Higashi optical system (rather than using Imai's rotating mirror adjacent to stationary elements) would have facilitated an unobstructed 360 degree field of view with an optional more compact lateral size. EX1003 ¶318.

Second, a POSITA would have been prompted to implement Pacala's conventional suggestions (describe above) with the Imai-Higashi combination because doing so was the application of known techniques (Pacala's suggested rotational mechanism in a LiDAR system) to a known system (the primary Imai LiDAR system) ready for improvement to yield predictable results, with a reasonable expectation of success. *KSR*, 550 U.S. at 417; EX1003 ¶319. Here, all the references describe conventional LiDAR configurations, including use of detector arrays that

compute time-of-flight measurements. EX1009, [0003]; EX1013, [0013]-[0014], FIG. 2. Moreover, a POSITA would have reasonably expected the emitter-detector arrangements of Imai and Higashi to work in a rotating device like Pacala. EX1003, ¶319.

2. Application to Challenged Claims

(a) *Claim 5:*

The Imai-Higashi-Pacala combination renders obvious claim 5. Pacala describes the base 50 that includes a motor to drive rotation of the turret section 60, which mounts the optical system of the device. EX1013, [0013], FIG. 2.

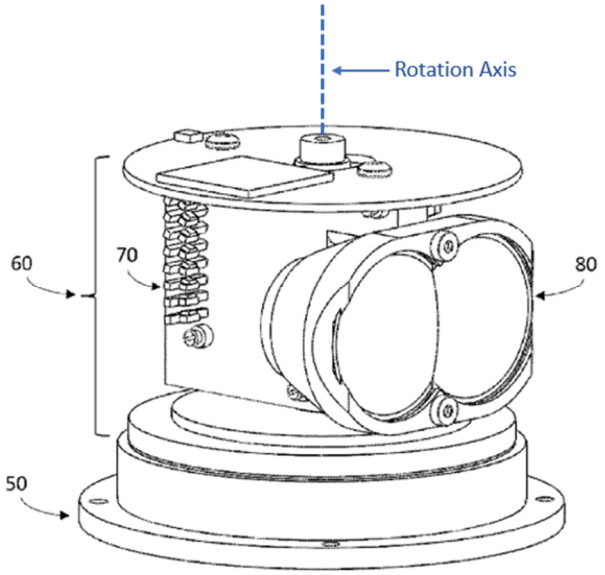

EX1003, ¶¶320-321 (EX1013, FIG. 2 (annotated)).

In the predictable combination, the Imai-Higashi LDA and PDA would have been predictably mounted in a housing (to retain Imai's adjacent lenses) that rotates about a central axis, as suggested by Pacala. EX1003, ¶¶321-22; *Epstein*, 32 F.3d at 1568.

IV. DISCRETIONARY DENIAL IS NOT WARRANTED

A. The *Fintiv* Factors Weigh in Favor of Institution - 35 U.S.C. § 314

The '381 patent is the subject of complaints in district court (EX1021) and the ITC (EX1020). The district court action was in its infancy when it was stayed pending ITC resolution. EX1022. Furthermore, the ITC investigation was terminated. Thus, it is highly unlikely the district court would resolve invalidity before a Final Written Decision in this proceeding. *Apple Inc. v. Fintiv, Inc.*, IPR2020-00019, Paper 11 at 5–6 (PTAB 2020) (*precedential*).

B. 35 U.S.C. § 325(d)

This Petition applies materially different prior art and arguments from those considered in any office action during prosecution, and does not warrant discretionary denial under 35 U.S.C. § 325(d). *See Advanced Bionics, LLC v. Med-El Elekt. Gerate GmbH*, IPR2019-01469, Paper 6 at 8-9 (PTAB 2020) (*precedential*).

None of the art relied on for Grounds 1A-1G and 2A-2C was substantively applied in any rejection in an office action, and the prosecution history indicates that there were no substantive arguments about any prior art publication during prosecution. *See, generally*, EX1002. And beyond this dispositive fact, each of the prior art combinations in Grounds 1A-1G and 2A-2C include at least one reference never

cited during prosecution, including at least Borowski, Weimer, Imai, and Higashi. Accordingly, regarding the first part of the framework set forth in *Advanced Bionics*, all Grounds 1A-1G and 2A-2C are certainly not based on "the same or substantially the same art previously was presented to the Office."

Even for those references that were cited in an IDS but never applied in any rejection or analyzed in any office action (e.g., pre-grant publication of Retterath, Pacala), the Board has repeatedly instituted review and elected to not exercise discretion under §325(d). *Amazon.com, Inc. v. M2M Sols. LLC*, IPR2019-01205, Paper 14 at 15 (PTAB. Jan. 27, 2020) ("The Board frequently holds that a reference that 'was neither applied against the claims nor discussed by the Examiner' does not weigh in favor of exercising the Board's discretion under § 325(d) to deny a petition."). Here, even if such references were considered under *Advanced Bionics* step two, this Petition specifically identifies relevant pin cites to those references and presents these pertinent teachings in unexamined manners never contemplated in any office action or response. *Advanced Bionics*, IPR2019-01469, Paper 6 at 8 n.9 ("An example of a material error may include misapprehending or overlooking specific teachings of the relevant prior art where those teachings impact patentability."). As explained in Section III and in the pertinent testimony of Dr. Shanley (EX1003), the record here amply demonstrates the examiner overlooked or otherwise erred in

understanding the remarkable similarities between the Retterath-Borowski combination, the Imai-Higashi combination, and the Challenged Claims. The '381 patent is ripe for review.

V. CONCLUSION

Petitioner respectfully requests institution of IPR and cancellation of the Challenged Claims.

VI. MANDATORY NOTICES UNDER 37 C.F.R § 42.8(a)(1)

A. Real Party-In-Interest Under 37 C.F.R. § 42.8(b)(1)

Hesai Group, Hesai Technology Co. Ltd., and Hesai Inc. are the real parties-in-interest.

B. Related Matters Under 37 C.F.R. § 42.8(b)(2)

The '381 patent is also the subject of a number of civil actions including: *Ouster, Inc. v. Hesai Group et al*, No. 23-cv-00406 (D. Del.) and *Certain LiDAR (Light Detection and Ranging) Systems and Components Thereof*, Inv. No. 337-TA-1363 (USITC). EX1020, 1021. The litigation in the District of Delaware is currently stayed. EX1022. The ITC investigation was terminated early. EX1015.

Contemporaneous with this Petition, Hesai is also seeking institution of IPR against U.S. Patent No. 11,190,750.

C. Lead And Back-Up Counsel Under 37 C.F.R. § 42.8(b)(3)

Petitioner provides the following designation of counsel.

Lead Counsel	Backup counsel

Michael T. Hawkins, Reg. No. 57,867 Fish & Richardson P.C. 60 South Sixth Street Suite 3200 Minneapolis, MN 55402 Tel: 202-783-5070 Fax: 877-769-7945 Email: IPR56432-0093IP2@fr.com	Craig A. Deutsch, Reg. No. 69,264 Yao Wang, Reg. No. 61,757 Fish & Richardson P.C. 60 South Sixth Street Suite 3200 Minneapolis, MN 55402 Tel: 202-783-5070 Fax: 877-769-7945 PTABInbound@fr.com

D. Service Information

Please address all correspondence and service to the address listed above. Petitioner consents to electronic service by email at IPR56432-0093IP2@fr.com (referencing Docket No. 56432-0093IP2).

VII. PAYMENT OF FEES – 37 C.F.R. § 42.103

Petitioner authorizes the Patent and Trademark Office to charge Deposit Account No. 06-1050 for the fee set in 37 C.F.R. § 42.15(a) for this Petition and further authorizes payment for any additional fees to be charged to this Deposit Account.

Dated September 25, 2023

Respectfully submitted,
/Michael T. Hawkins/
Michael T. Hawkins, Reg. No. 57,867
Craig A. Deutsch, Reg. No. 69,264
Yao Wang, Reg. No. 61,757
Fish & Richardson P.C.
60 South Sixth Street, Suite 3200
Minneapolis, MN 55402
T: 202-783-5070
F: 877-769-7945

(Control No. IPR2023-01456)

Attorneys for Petitioner

CERTIFICATION UNDER 37 CFR § 42.24

Under the provisions of 37 CFR § 42.24(d), the undersigned hereby certifies that the word count for the foregoing Petition for *Inter partes* Review totals 13,996 words, which is less than the 14,000 allowed under 37 CFR § 42.24.

Dated September 25, 2023

/Michael T. Hawkins/

Michael T. Hawkins, Reg. No. 57,867
Craig A. Deutsch, Reg. No. 69,264
Yao Wang, Reg. No. 61,757
Fish & Richardson P.C.
60 South Sixth Street, Suite 3200
Minneapolis, MN 55402
T: 202-783-5070
F: 877-769-7945

Attorneys for Petitioner

CERTIFICATE OF SERVICE

Pursuant to 37 CFR §§ 42.6(e)(4)(i) *et seq.* and 42.105(b), the undersigned certifies that on September 25, 2023, a complete and entire copy of this Petition for *Inter partes* Review, Power of Attorney, and all supporting exhibits were provided via Federal Express, to the Patent Owner by serving the correspondence address of record as follows:

KILPATRCIK TOWNSEND & STOCKTON LLP – WEST COAST
Mailstop: IP Docketing-22
1100 Peachtree Street, Suite 2800
Atlanta, GA 30309
UNITED STATES

/Kristyn Waldhauser/
Kristyn Waldhauser
Fish & Richardson P.C.
60 South Sixth Street, Suite 3200
Minneapolis, MN 55402
waldhauser@fr.com