UNITED STATES PATENT AND TRADEMARK OFFICE

BEFORE THE PATENT TRIAL AND APPEAL BOARD

HESAI TECHNOLOGY CO., LTD.
Petitioner

v.

OUSTER, INC.
Patent Owner

U.S. Patent No. 11,287,515

"Rotating Compact Light Ranging System Comprising A Stator Driver Circuit Imparting An Electromagnetic Force On A Rotor Assembly"

IPR2023-01422

PETITION FOR *INTER PARTES* REVIEW
UNDER 35 U.S.C. §312 AND 37 C.F.R. §42.104

TABLE OF CONTENTS

I. INTRODUCTION 1

II. MANDATORY NOTICES 2

A. Real Party-In-Interest 2

B. Related Matters 2

C. Lead and Backup Counsel and Service Information 2

III. STANDING 3

IV. PAYMENT OF FEES 3

V. IDENTIFICATION OF RELIEF REQUESTED 4

VI. '515 PATENT 4

A. Priority 4

B. Specification 5

C. Prosecution History 9

VII. POSITA 9

VIII. CLAIM CONSTRUCTION 9

IX. GROUND 1: PACALA, JOHNSON, PARDHAN, AND ZHANG RENDER OBVIOUS CLAIMS 1-2, 4-9, 11, 14, 16-17 AND 19. 10

A. U.S. Patent Pub. No. 2014/0211194 ("Pacala") 10

B. U.S. Patent No. 10,790,077 ("Johnson") 11

C. U.S. Patent No. 10,749,308 ("Pardhan") 14

D. WO2018/201567 ("Zhang") 15

E. The Pacala-Johnson-Pardhan-Zhang Combination 16

X. GROUND 2: PACALA, JOHNSON, PARDHAN, AND ZHANG IN FURTHER VIEW OF CAI RENDERS OBVIOUS CLAIMS 2, 4-6 AND 17 56

A. CN205027903U ("Cai") 56

B. The Pacala-Johnson-Pardhan-Zhang-Cai Combination 59

XI. GROUND 3: PACALA, JOHNSON, PARDHAN, ZHANG, AND CAI IN FURTHER VIEW OF HALL RENDERS OBVIOUS CLAIMS 5-6.....66

A. U.S. Patent No. 11,723,762 ("Hall") 66

B. The Pacala-Johnson-Pardhan-Zhang-Cai-Hall Combination 68

XII. GROUND 4: PACALA, JOHNSON, PARDHAN, AND ZHANG IN FURTHER VIEW OF SPECTOR RENDERS OBVIOUS CLAIMS 12 AND 20 74

A. U.S. Patent No. 10,473,766 ("Spector") 74

B. The Pacala-Johnson-Pardhan-Zhang-Spector Combination.....76

XIII. GROUND 5: PACALA, JOHNSON, PARDHAN, ZHANG, AND SPECTOR IN FURTHER VIEW OF DROZ RENDERS OBVIOUS CLAIMS 13 AND 21.....78

A. U.S. Patent No. 10,605,984 ("Droz") 78

B. The Pacala-Johnson-Pardhan-Zhang-Spector-Droz Combination.....79

XIV. GROUND 6: PACALA, JOHNSON, PARDHAN, ZHANG, DROZ, AND CAI IN FURTHER VIEW OF YAN RENDERS OBVIOUS CLAIMS 22-24 81

A. U.S. Patent Pub. No. 2018/0003823 ("Yan") 81

B. The Pacala-Johnson-Pardhan-Zhang-Droz-Cai-Yan Combination 83

XV. GROUND 7: PACALA, JOHNSON, PARDHAN, ZHANG, DROZ, YAN, AND CAI IN VIEW OF SPECTOR RENDERS OBVIOUS CLAIM 25. ...96

XVI. GROUND 8: PACALA-2017, JOHNSON, PARDHAN, AND ZHANG RENDER OBVIOUS CLAIMS 1, 2, 4-9, 11-14, 16-17, 19-21 97

A. U.S. Patent Pub. No. 2017/0289524 ("Pacala-2017").....97

B. The Pacala-2017-Johnson-Pardhan-Zhang Combination.....98

XVII. GROUND 9: PACALA-2017, JOHNSON, PARDHAN, ZHANG IN FURTHER VIEW OF CAI AND YAN RENDER CLAIMS 22-25 OBVIOUS. 105

A. The Pacala-2017-Johnson-Pardhan-Zhang-Cai-Yan Combination ..105

XVIII. DISCRETIONARY FACTORS.....107

A. §314.....107

B. §325(d) 108

XIX. CONCLUSION 108

EXHIBIT LIST

No.	Short Name	Exhibit
1001	'515 Patent	U.S. Patent No. 11,287,515 to Pacala *et al.*
1002	'515 Prosecution History	Prosecution history for U.S. Patent No. 11,287,515
1003	Lebby Declaration	Expert Declaration of Dr. Michael Lebby
1004	Pacala	U.S. Patent Pub. No. 2014/0211194 to Pacala *et al*.
1005	Johnson	U.S. Patent No. 10,790,077 to Johnson
1006	Pardhan	U.S. Patent No. 10,749,308 to Pardhan *et al.*
1007	Zhang	Certified Translation of WO2018/201567 to Zhang *et al*. (WO2018201567A1_EN)
1008	Cai	Certified Translation of CN205027903U to Cai *et al*. (CN205027903U_EN)
1009	Hall	U.S. Patent No. 11,723,762 to Hall *et al*.
1010	Spector	U.S. Patent No. 10,473,766 to Spector *et al*.
1011	Droz	U.S. Patent No. 10,605,984 to Droz *et al*.
1012	Yan	U.S. Patent Pub. No. 2018/0003823 to Yan
1013	Pacala-2017	U.S. Patent Pub. No. 2017/0289524 to Pacala *et al*.
1014	Pennecot	U.S. Patent No. 9,651,658 to Pennecot *et al.*
1015	Verghese	U.S. Patent No. 10,845,470 to Verghese *et al.*
1016	Shah	U.S. Patent Pub. No. 2010/0030380 to Shah et al.

No.	Short Name	Exhibit
1017	ITC Complaint	Complaint in ITC Inv. No. 337-TA-1363
1018	Delaware Complaint	Complaint in *Ouster, Inc. v. Hesai Group et al*, No. 23-cv-00406 (D. Del.)
1019	Stay Order (DE)	(Part A) Order Granting Stay in *Ouster, Inc. v. Hesai Group et al.*, No. 23-cv-00406 (D. Del.) (Part B) ITC Inv. No. 337-TA-1363, EDIS Document Details re: Granting Motion for Termination
1020	Staff's Proposed Constructions	Commission Investigative Staff's Initial Proposed Constructions of Disputed Claim Terms (6-28-2023)
1021	Ouster's Proposed Constructions	Ouster's Initial Proposed Constructions of Disputed Claim Terms (6-28-2023)
1022	Hesai's Proposed Constructions	Hesai's Initial Proposed Constructions of Disputed Claim Terms (6-28-2023)
1023	NIST	*Performance Analysis of Next-Generation LADAR for Manufacturing, Construction, and Mobility*, National Institute of Standards and Technology (2004)
1024	Hipp	U.S. Patent No. 6,747,747 to Hipp
1025	DGC	*Report to Congress: DARPA Prize Authority* (2006)
1026	Team DAD	Hall *et al.*, *Team DAD Technical Paper*, DARPA Grand Challenge (2005)
1027	Hall-558	U.S. Patent No. 7,969,558 to Hall
1028	William	U.S. Patent No. 9,935,514 to William *et al.*

No.	Short Name	Exhibit
1029	Droz-649	U.S. Patent No. 9,059,649 to Droz *et al.*
1030	Kim	Sang-Hoon Kim, Electric Motor Control, 2017
1031	Tong	Mechanical Design of Electric Motors, 2014
1032	Gieras	Axial Flux Permanent Magnet Brushless Machines
1033	Bearing Units Manual	NTN, Bearing Units
1034	Johansen	U.S. Patent No. 11,374,458 to Johansen
1035	Phaneuf	U.S. Patent No. 2,818,518 to Phaneuf *et al.*
1036	Hunter	U.S. Publication No. 2016/0380523 to Hunter *et al.*
1037	Campisi	U.S. Patent No. 4,627,157 to Campisi *et al.*
1038	Poag	U.S. Patent No. 6,324,745 to Poag *et al.*
1039	Bockenstedt	U.S. Patent No. 7,946,986 to Bockenstedt *et al.*
1040	YMS PCB	Single-Layer vs. Multilayer PCBs, available at https://www.ymspcb.com/news/single-layer-vs-multilayer-pcbs-how-do-they-differ
1041	Hayner	U.S. Patent No. 3,375,386 to P.F. Hayner *et al.*
1042	Ricci	U.S. Patent No. 10,141,822 to Ricci *et al.*
1043	Nubling	U.S. Patent No. 9,606,230 to Nubling
1044	Ouster Priority Date Disclosure	Ouster's Notice of Patent Priority Dates
1045	Karplus	U.S. Patent No. 10,530,209 to Karplus *et al.*

No.	Short Name	Exhibit
1046	Pacala-2017 Provisional	Provisional Application No. 62/232,222
1047	Zhang	WO2018201567A1 to Zhang *et al*.
1048	Cai	CN205027903U to Cai *et al*.

CLAIM LISTING

The challenged claims in this proceeding are claims 1-2, 4-9, 11-14, 16-17, and 19-25 of the '515 Patent, reproduced below:

Claim 1	
1(a)	A light ranging system comprising:
1(b)	an enclosure having a base, a top cover and an optically transparent window disposed between the base and the top cover and extending fully around a periphery of the enclosure;
1(c)	a shaft disposed within the enclosure and defining an axis of rotation;
1(d)	a stator circuit board disposed within the enclosure along a first plane perpendicular to the axis of rotation and fixedly coupled to the base of the enclosure;
1(e)	a support component rotationally coupled to the shaft and comprising a sleeve fitted over the shaft and a plurality of arms extending away from the sleeve;
1(f)	a rotor circuit board coupled to the support component and disposed within the enclosure along a second plane parallel to the first plane and between the first plane and the top cover;
1(g)	a stator assembly disposed between the first and second planes and coupled to the stator circuit board, the stator assembly comprising a plurality of stator elements arranged annularly about the axis of rotation, each of the plurality of stator elements including a coil wound around a magnetic core;
1(h)	a rotor assembly disposed between the first and second planes and coupled to the rotor circuit board, the rotor assembly including an annular arrangement in which a plurality of magnetic poles surround the axis of rotation in an alternating pattern such that each magnetic pole has a polarity opposite a polarity of its adjacent magnetic poles; and

1(i)	a light ranging device coupled to rotate with the rotor circuit board within the enclosure, the light ranging device comprising a transmit module comprising a bulk transmitting optic and an illumination source operable to transmit pulses of electromagnetic radiation through the bulk transmitting optic and through the window to objects in a surrounding environment, and an receive module comprising a bulk receiver optic and detector circuitry operable to detect reflected portions of the electromagnetic radiation pulses received through the window that are reflected from the objects in the surrounding environment; and
1(j)	a stator driver circuit disposed within the enclosure and configured to provide a drive signal to the plurality of stator elements, thereby imparting an electromagnetic force on rotor assembly to drive a rotation of the rotor circuit board and the light ranging device about the shaft.
Claim 2	
2	The light ranging system of claim 1 wherein the shaft is hollow and the system further comprises a communication channel that extends through the hollow shaft allowing ranging data from the light ranging device to be transmitted to processing circuitry disposed within the enclosure in a fixed relationship to the stator circuit board.
Claim 4	
4	The light ranging system of claim 1 further comprising: a third circuit board fixedly coupled to the base and arranged in a plane parallel with the first plane and disposed between the enclosure base and the stator circuit board; and a fourth circuit board coupled to rotate with the rotor circuit board between the enclosure top and the rotor circuit board and arranged in a plane parallel with the first plane.
Claim 5	
5	The light ranging system of claim 4 wherein the light ranging device is mounted within a ranging device housing disposed within the enclosure between the fourth circuit board and the enclosure top with the transmit module mounted to a first portion of the ranging device housing and the receive module mounted to a second portion of the ranging device housing directly adjacent to the first portion
Claim 6	

6	The light ranging system of claim 5 wherein transmit module comprises a fifth circuit board with supporting circuitry for the illumination source and the receive module comprises a sixth circuit board with supporting circuitry for the detector circuitry, and wherein the fifth circuit board is mounted to the first housing portion of the ranging device housing and aligned parallel to the axis of rotation and the sixth circuit board is mounted to the second housing portion of the ranging device housing and aligned parallel to the axis of rotation.
Claim 7	
7	The light ranging system of claim 1 wherein the annular arrangement comprises a plurality of separate permanent magnets.
Claim 8	
8	The light ranging system of claim 1 further comprising circuitry to compute ranging data based on the reflected portion of the electromagnetic radiation pulses.
Claim 9	
9	The light ranging system of claim 1 wherein the stator driver circuit is configured to rotate the rotor assembly at a rate between 10 to 30 Hz.
Claim 11	
11	The light ranging system of claim 1 wherein a number of stator elements in the plurality of stator elements is a multiple of three and the stator driver circuit is configured to provide a 3-phase alternating signal to the plurality of stator elements.
Claim 12	
12	The light ranging system of claim 1 wherein the detector circuitry comprises a plurality of pixels with each pixel in the plurality of pixels having a field of view that is non-overlapping with the fields of view of all other pixels in the plurality of pixels, and wherein the illumination source is configured to project discrete beams of electromagnetic radiation into the surrounding environment according to an illumination pattern where each discrete beam in the illumination pattern is coincident with the field of view of one pixel in the plurality of pixels.
Claim 13	

13	The light ranging system of claim 12 wherein each pixel in the plurality of pixels comprises a plurality of single photon avalanche diodes (SPADs).
Claim 14	
14(a)	A light ranging system comprising:
14(b)	an enclosure having a base, a top cover and an optically transparent window disposed between the base and the top cover and extending fully around a periphery of the enclosure;
14(c)	a shaft disposed within the enclosure and defining an axis of rotation;
14(d)	a stator circuit board disposed within the enclosure along a first plane perpendicular to the axis of rotation and fixedly coupled to the base of the enclosure;
14(e)	a support component comprising a sleeve fitted over the shaft and a plurality of arms extending away from the sleeve;
14(f)	one or more bearings coupled between the shaft and the support component allowing the support component to rotate around the axis of rotation;
14(g)	a rotor circuit board coupled to rotate with the support component and disposed within the enclosure along a second plane parallel to the first plane and between the first plane and the top cover;
14(h)	a stator assembly coupled to the stator circuit board and comprising a plurality of stator elements arranged annularly about the axis of rotation, each of the plurality of stator elements including a coil;
14(i)	a rotor assembly coupled to the rotor circuit board, the rotor assembly including an annular arrangement in which a plurality of magnetic poles surround the axis of rotation in an alternating pattern such that each magnetic pole has a polarity opposite a polarity of its adjacent magnetic poles; and

14(j)	a light ranging device coupled to rotate with the rotor circuit board within the enclosure, the light ranging device comprising a transmit module comprising a bulk transmitting optic and an illumination source operable to transmit pulses of electromagnetic radiation through the bulk transmitting optic and through the window to objects in a surrounding environment, and an receive module comprising a bulk receiver optic and detector circuitry operable to detect reflected portions of the electromagnetic radiation pulses received through the window that are reflected from the objects in the surrounding environment; and
14(k)	a stator driver circuit disposed within the enclosure and configured to provide a drive signal to the plurality of stator elements, thereby imparting an electromagnetic force on rotor assembly to drive a rotation of the rotor circuit board and the light ranging device about the shaft.
Claim 16	
16	The light ranging system of claim 14 wherein the plurality of magnetic poles rotor in the annular arrangement of the rotor assembly comprise a plurality of separate permanent magnets.
Claim 17	
17	The light ranging system of claim 14 further comprising a wireless power transformer integrated directly onto the stator and rotor circuit boards, the wireless power transformer comprising a first annular transformer coil disposed on a surface of the stator circuit board and a second annular transformer coil disposed on a surface of the rotor circuit board in an opposing relationship with the first annular transformer coil, wherein the first transformer coil is concentric with and positioned outside an outer perimeter of the plurality of stator elements and the second transformer coil is concentric with and positioned outside an outer perimeter of the rotor assembly annular arrangement.
Claim 19	

19	The light ranging system of claim 14 wherein the light ranging device determines distances to objects in the surrounding environment based on elapsed times between the pulses of electromagnetic radiation emitted from the illumination source and the detection of reflected portions of the electromagnetic radiation pulses by the receive circuitry.
Claim 20	
20	The light ranging system of claim 14 wherein the detector circuitry comprises a plurality of pixels with each pixel in the plurality of pixels having a field of view that is non-overlapping with the fields of view of all other pixels in the plurality of pixels, and wherein the illumination source is configured to project discrete beams of electromagnetic radiation into the surrounding environment according to an illumination pattern where each discrete beam in the illumination pattern is coincident with the field of view of one pixel in the plurality of pixels.
Claim 21	
21	The light ranging system of claim 20 wherein each pixel in the plurality of pixels comprises a plurality of single photon avalanche diodes (SPADs).
Claim 22	
22(a)	A light ranging system comprising:
22(b)	an enclosure having a base, a top cover and an optically transparent window disposed between the base and the top cover and extending fully around a periphery of the enclosure;
22(c)	a shaft disposed within the enclosure and defining an axis of rotation, the shaft including a hollow channel axially aligned with the axis of rotation and extending through a length of the shaft;
22(d)	a stator circuit board assembly disposed within and coupled to the enclosure in a fixed relationship, the stator circuit board assembly comprising:
22(d.i)	a first circuit board disposed along a plane perpendicular to the axis of rotation;

22(d.ii)	a second circuit board disposed parallel to and adjacent to the first circuit board and having a first aperture formed through a central portion of the second circuit board; and
22(d.iii)	a stator assembly comprising a plurality of stator elements arranged about the axis of rotation;
22(e)	a rotor circuit board assembly disposed within the enclosure and rotationally coupled to the shaft, the rotor circuit board assembly comprising:
22(e.i)	a support component having lower and upper surfaces, a sleeve extending away from the lower surface and fitted over the shaft, a plurality of arms extending away from the sleeve, and a plurality of alignment posts extending away from the upper surface;
22(e.ii)	a third circuit board coupled to the lower surface of the support component and disposed adjacent to and in an opposing relationship with the second circuit board;
22(e.iii)	a fourth circuit board coupled to the upper surface of the support component and arranged parallel with the third circuit board between the third circuit board and the top cover, the fourth circuit board having a plurality of alignment cutouts sized and shaped to accept the alignment posts; and
22(e.iv)	a rotor component coupled to the rotor circuit board assembly and spaced apart from and concentric with the stator assembly, the rotor component comprising an annular arrangement in which a plurality of magnetic segments surround the axis of rotation and are distributed along the annular arrangement in an alternating pattern such that each magnetic pole has a polarity opposite a polarity of its adjacent magnetic poles;

22(f.i)	a light ranging device coupled to rotate with the rotor circuit board within the enclosure, the light ranging device comprising a transmit module and a receive module, the transmit module comprising a bulk transmitting optic and a light source operable to transmit pulses of electromagnetic radiation through the bulk transmitting optic and through the window to objects in a surrounding environment, the receive module comprising a bulk receiver optic and detector circuitry operable to detect reflected portions of the electromagnetic radiation pulses received through the window that are reflected from the objects in the surrounding environment,
22(f.ii)	wherein the detector circuitry comprises a plurality of pixels, each pixel comprising a plurality of single photon avalanche detectors (SPADs) and
22(f.iii)	wherein the light ranging device determines distances to objects in the surrounding environment based on elapsed times between the pulses of electromagnetic radiation emitted from the light source and the detection of reflected portions of the electromagnetic radiation pulses by the detector circuitry
22(g)	a stator driver circuit disposed within the enclosure and configured to provide a drive signal to the plurality of stator elements, thereby imparting an electromagnetic force on the rotor component to drive a rotation of the second circuit board assembly and the light ranging device about the shaft;
22(h)	a wireless power transformer integrated directly onto the stator and rotor circuit boards, the wireless power transformer comprising a first annular transformer coil disposed on a surface of the stator circuit board and a second annular transformer coil disposed on a surface of the rotor circuit board in an opposing relationship with the first annular transformer coil, wherein the first transformer coil is concentric with and positioned outside an outer perimeter of the plurality of stator elements and the second transformer coil is concentric with and positioned outside an outer perimeter of the rotor assembly annular arrangement; and
22(i)	a communication channel extending through the hollow channel in the shaft and operatively coupled to allow ranging data from the light ranging device to be transmitted to circuitry disposed within the enclosure in a fixed relationship to the stator circuit board assembly.

Claim 23	
23	The light ranging system of claim 22 wherein the plurality of stator elements and the annular arrangement of the plurality of magnetic segments are each disposed between a surface of the second circuit board and a surface of the third circuit board.
Claim 24	
24	The light ranging system of claim 22 wherein each magnetic segment in the annular arrangement of the rotor component comprises a permanent magnet.
Claim 25	
25	The light ranging system of claim 22 wherein the light source comprises a plurality of emitters configured to project a plurality of illuminating beams in a field ahead of the optical system according to an illumination pattern that substantially matches, in size and geometry across a range of distances from the system, a plurality of non-overlapping fields of view of the plurality of pixels.

I. INTRODUCTION

Hesai Technology Co., Ltd. requests that the Board institute IPR and cancel claims 1-2, 4-9, 11-14, 16-17, and 19-25 of the '515 Patent.

The challenged claims are directed to a rotating structure for light detection and ranging ("LiDAR") devices. LiDAR has been known for decades. A LiDAR system emits laser pulses into the environment and measures the time it takes for the pulses to reflect off objects in the field and return. The "time-of-flight" for each pulse can be translated to a distance, and individual distances can be combined into a three-dimensional map or "point cloud" of the environment.

Long before the priority date of the '515 Patent, spinning LiDAR devices were developed to capture point-cloud data in 360-degrees. Because the basic functionality of these devices involves rotating a platform or housing containing the LiDAR device, persons of skill in the art ("POSITAs") knew to rely on known motor designs with rotor and stator elements mounted on opposing circuit boards and a hollow shaft to provide power and data transmission circuitry from the rotating housing to the fixed base.

The challenged claims describe these same basic features. Rather than proposing a novel rotational mechanism or data transmission technique, the claims combine well-known, conventional components used in LiDAR devices.

II. MANDATORY NOTICES

A. Real Party-In-Interest

Pursuant to 37 C.F.R. § 42.8(b)(1), Hesai identifies itself as the real party-in-interest, along with Hesai Group and Hesai Inc.

B. Related Matters

Pursuant to 37 C.F.R. §42.8(b)(2), Ouster asserted the '515 Patent against Hesai in parallel complaints filed on April 11, 2023 in the U.S. District Court for the District of Delaware and the U.S. International Trade Commission. *Ouster, Inc. v. Hesai Group et al*, No. 23-cv-00406 (D. Del.) and *Certain LiDAR (Light Detection and Ranging) Systems and Components Thereof*, Inv. No. 337-TA-1363 (USITC).

The litigation in the District of Delaware is currently stayed. EX1019, 2. In the ITC Action, the presiding Administrative Law Judge has issued an initial determination granting Hesai's motion to terminate in view of an arbitration Hesai filed against Ouster. EX1019, 5.

Contemporaneous with this Petition, Hesai is also seeking institution of IPR against four other patents that Ouster asserted against Hesai in the aforementioned litigation: US. Patent Nos. 11,175,405, 11,178,381, 11,190,750, and 11,422,236.

C. Lead and Backup Counsel and Service Information

Pursuant to 37 C.F.R. §42.8(b)(3)-(4), the designations of counsel and address for service are below. Petitioner consents to electronic service at the email addresses.

LEAD COUNSEL	BACKUP COUNSEL
Jared W. Newton Reg. No. 65,818 jarednewton@quinnemanuel.com **Postal and Hand Delivery Address:** QUINN EMANUEL URQUHART & SULLIVAN, LLP 1300 I Street, NW, 9th Floor Washington, DC 20005 Tel: (202) 538-8108 Fax: (202) 538-8100	James M. Glass Reg. No. 46729 jimglass@quinnemanuel.com **Postal and Hand Delivery Address:** QUINN EMANUEL URQUHART & SULLIVAN, LLP 51 Madison Avenue, 22nd Floor New York, NY 10010 Tel: (212) 849-7000 Fax: (212) 849-7100 Nima Hefazi Reg. No. 63658 nimahefazi@quinnemanuel.com **Postal and Hand Delivery Address:** QUINN EMANUEL URQUHART & SULLIVAN, LLP 865 S. Figueroa St., 10th Floor Los Angeles, California 90017 Tel: (213) 443-3000 Fax: (213) 443-3100

III. STANDING

Hesai certifies that the '515 Patent is available for IPR, and that Hesai is not barred or estopped from requesting review. Ouster filed a complaint alleging infringement of the '515 Patent on April 11, 2023, and service was effectuated no sooner than May 4, 2023. This Petition is timely filed pursuant to 35 U.S.C. §315(b).

IV. PAYMENT OF FEES

Petitioner authorizes the office to charge Deposit Account No. 505708 for the Petition fee set forth in 37 C.F.R. §42.15(a), and for any additional fees.

V. IDENTIFICATION OF RELIEF REQUESTED

Hesai requests cancellation based on the following grounds:

Ground	Claims	Description
1	1-2, 4-9, 11, 14, 16-17, 19	Obvious based on Pacala-Johnson-Pardhan-Zhang.
2	2, 4-6, 17	Obvious based on Pacala-Johnson-Pardhan-Zhang-Cai.
3	5-6	Obvious based on Pacala-Johnson-Pardhan-Zhang-Cai-Hall.
4	12, 20	Obvious based on Pacala-Johnson-Pardhan-Zhang-Spector.
5	13, 21	Obvious based on Pacala-Johnson-Pardhan-Zhang-Spector-Droz.
6	22-24	Obvious based on Pacala-Johnson-Pardhan-Zhang-Droz-Cai-Yan.
7	25	Obvious based on Pacala-Johnson-Pardhan-Zhang-Droz-Cai-Yan-Spector.
8	1, 2, 4-9, 11-14, 16-17, 19-21	Obvious based on Pacala-2017-Johnson-Pardhan- Zhang
9	22-25	Obvious based on Pacala-2017-Johnson-Pardhan-Zhang-Cai-Yan.

VI. '515 PATENT

A. Priority

The priority date of the '515 Patent is December 4, 2018.

The '515 Patent was filed on May 18, 2021, claiming priority to a December 4, 2018 application. EX1001. Although the specification identifies a provisional filed December 7, 2017, the patent is not entitled to the provisional's filing date because the Application Data Sheet does not identify it (EX1002, 290-297), as required by 35 U.S.C. §119(e)(1) and 37 C.F.R. §1.78. *See also Edge-Works Manufacturing Company v. HSG, LLC*, 285 F. Supp. 3d 883 (E.D.N.C. Jan. 11, 2018) (patentee was entitled to an priority date because priority claim "must be included in the application data sheet") (underlining in the original). In the ITC action, Ouster admitted the priority date is December 4, 2018. EX1044.

B. Specification

The '515 Patent is directed to a structure for rotating a LiDAR device. EX1001, Abstract.

Figure 2A shows the basic structure of the device.

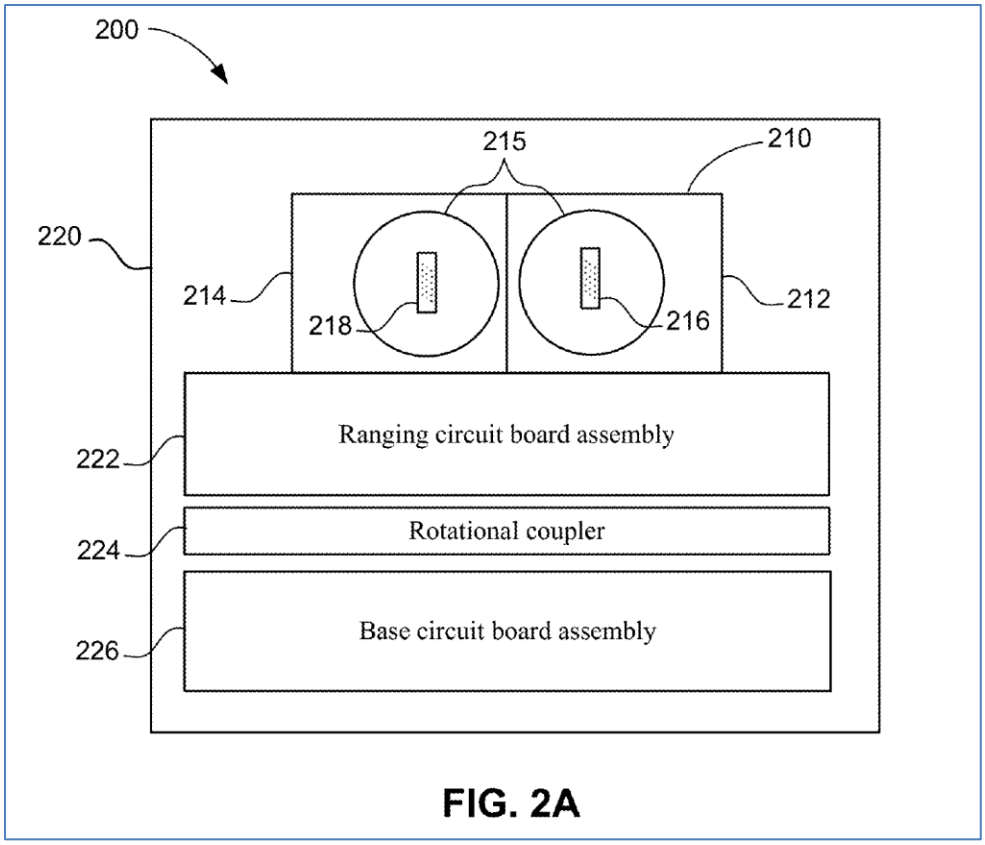

FIG. 2A

Id., Fig. 2A, 10:35-50.

Detailed configurations of the rotor elements (red), stator elements (blue), and shaft (gray) are illustrated in Figures 6-8. *Id*., 26:3-18, 32:53-60. For example, Figure 6A shows a cross-sectional view of the LiDAR device:

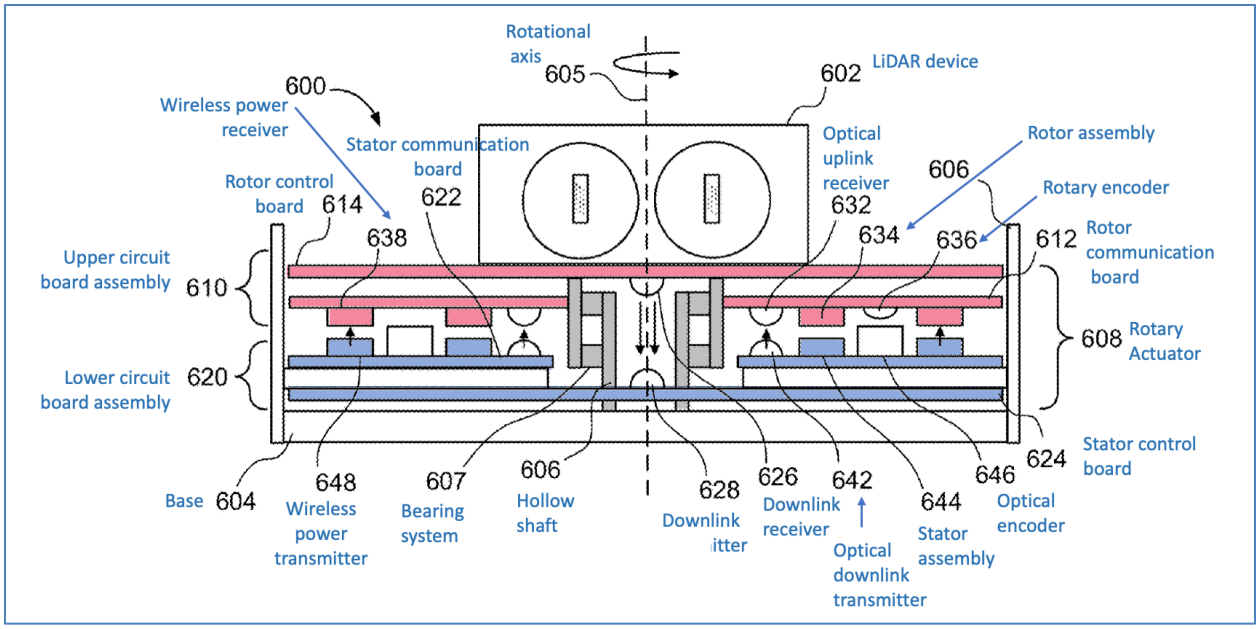

Id., Fig. 6A.[1]

A stated "advantage" of the patent is that the elements are "built onto the circuit boards," allowing for a compact size. *Id.*, 4:19-31. Figures 6D-6E illustrate the rotor board and elements (612/634) and stator board and elements (622/644):

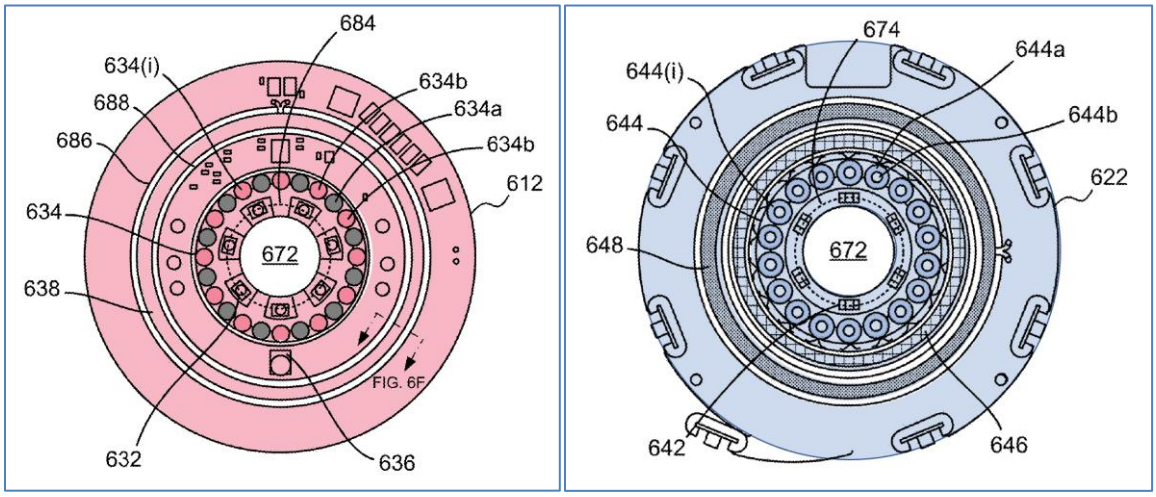

[1] Unless otherwise noted, colored text and highlights are annotations.

Id., Figs. 6D-6E, 30:15-67. The rotor elements 634b are magnets, while the stator elements 644a are coils wound around a core 644b. *Id.*

Figure 8A provides an exploded view of the assembled device:

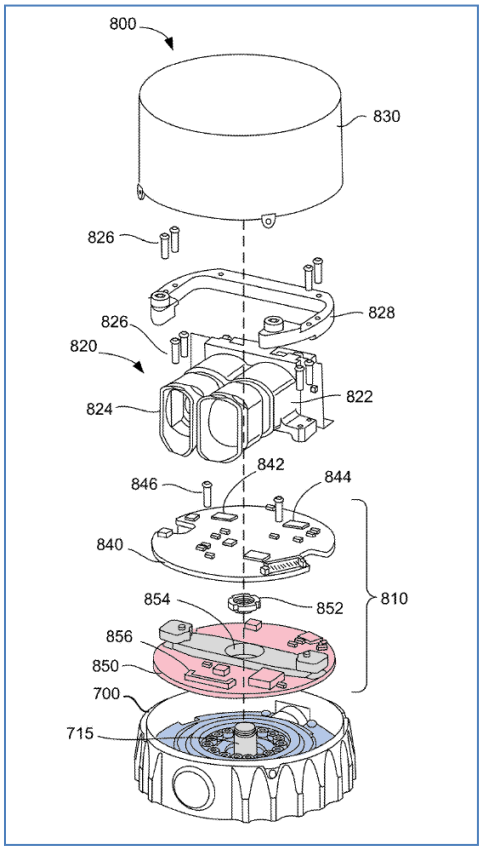

Id., Fig. 8A. The lower circuit board assembly 700 includes the stator board and elements. *Id*. The shaft 715 extends through the central hole in the stator board. *Id*., 33:29-31. Rotor board 850 has rotor elements (not shown) positioned opposite the stator elements of the stator board (shown in Figure 6A). *Id*., 30:5-67, Fig. 6A. A "T-shaped bearing housing" (gray) is mounted on the rotor board and rotates around the shaft. *Id*., 34:45-50. Finally, a ranging device control board 840, ranging device 820, and enclosure 830 are assembled above the rotor board. *Id*., 34:51-63, 35:5-23.

C. Prosecution History

The examiner allowed the claims approximately two months after the application was filed. EX1002, 128-131. The Reasons for Allowance repeat the limitations of claim 1 and state—without explanation—that the prior art of record failed to disclose them. *Id*., 129-130.

VII. POSITA

A POSITA as of the priority date of the ’515 Patent would have had an undergraduate degree in mechanical or electrical engineering and two to three years of work experience with electro-optical and electro-mechanical devices or systems. Less work experience may be compensated by a higher level of education or vice versa. EX1003, ¶¶39-41.

VIII. CLAIM CONSTRUCTION

Petitioner does not believe any terms require construction to resolve the patentability disputes. In the ITC action the parties (and ITC staff) exchanged preliminary constructions, but the claim were not construed. Exs. 1020-1022. Petitioner demonstrates how the prior art renders obvious the challenged claims under any proposed construction. Consequently, the Board does not need to decide these issues. *Nidec Motor Corp. v. Zhongshan Broad Ocean Motor Co.*, 868 F.3d 1013, 1017 (Fed. Cir. 2017).

IX. GROUND 1: PACALA, JOHNSON, PARDHAN, AND ZHANG RENDER OBVIOUS CLAIMS 1-2, 4-9, 11, 14, 16-17 AND 19.

A. U.S. Patent Pub. No. 2014/0211194 ("Pacala")

Pacala was filed January 27, 2014 and published July 31, 2014, and is prior art under 35 U.S.C. §102(a)(1)-(2). EX1004. Pacala is analogous art to the '515 patent. EX1003, ¶80.

Pacala discloses a LiDAR system comprising a static base 20/50 (blue) spinning turret 60 (red) for providing rotation:

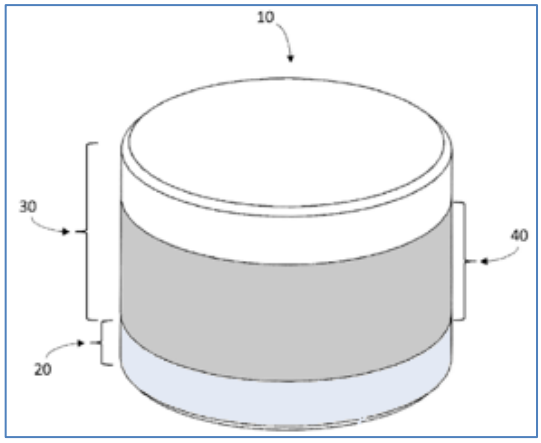

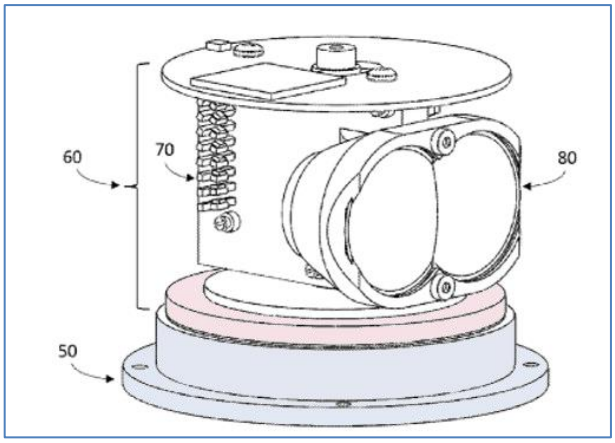

EX1004., Figs. 1-2, [0012]-[0013]. Mounted on the turret are optoelectronics components 70, lenses 80, and distributed electronics. *Id*. Surrounding the rotating components is a transparent window 40 (gray). *Id*.

Pacala further teaches that a motor is used to rotate the LiDAR device and may be "located on said static base and/or on said spinning turret." EX1004, [0013]. However, Pacala does not detail the implementation of the base and turret. Those details can be found in reference such as Johnson, Pardhan, and Zhang.

B. U.S. Patent No. 10,790,077 ("Johnson")

Johnson was filed October 31, 2017 and published September 29, 2020, and is prior art under 35 U.S.C. §102(a)(1)-(2). EX1005. It is assigned to Waymo, LLC, the autonomous vehicle subsidiary of Alphabet, Inc. *Id*. Johnson is analogous art to the '515 patent. EX1003, ¶92.

Johnson teaches a rotary joint device for sensor applications, such as "LIDARs." *Id*., 6:51-58, 7:22-28. The rotary joint device includes a rotor-stator platform with a "PCB motor" that is incorporated into the platforms to rotate the rotor relative to a fixed stator. *Id*., 6:49-58, 13:57-14:10; *see also* 10:62-11:17, 11:66-12:28, 12:8-11, Figs. 3B-3D. Thus, like the '515 Patent, Johnson implements the motor as components that are mounted onto the rotor-stator platform in order to provide a compact design. EX1003, ¶84; *see also* EX1045, 4:1-6 (disclosing similar structure and stating that "implement[ing]" the motor "as components included and/or mounted to the rotor and stator" provides a "compact" design).

Figure 2 is a block diagram of the rotor (red) and stator (blue) platforms:

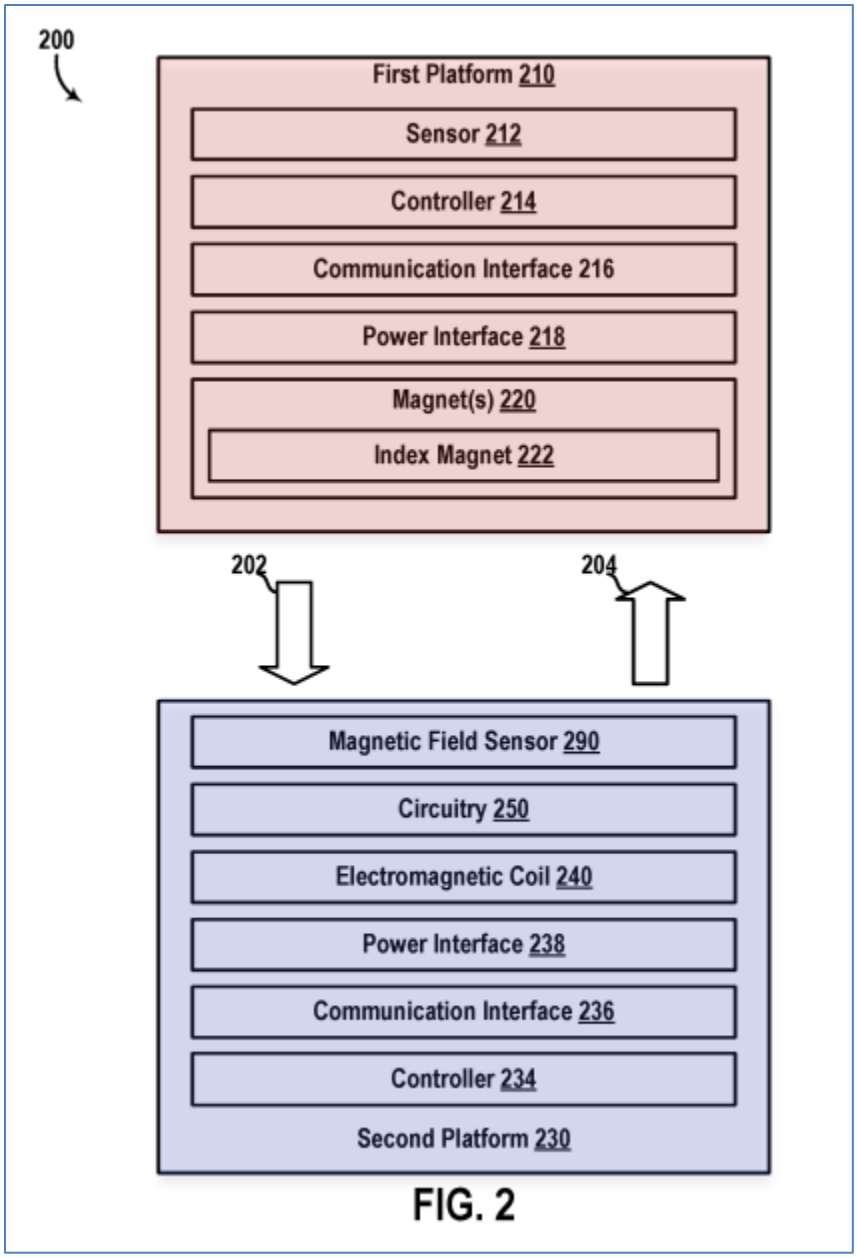

FIG. 2

Id., Fig. 2. The "sensor 212" mounted on the upper surface of rotor platform 210 may be "LiDAR." *Id*., 7:22-27.

Platform 210 "may comprise any solid material suitable for supporting and/or mounting various components of platform 210" and "may include a printed circuit board (PCB) that mounts communication interface 216 and/or other components

of platform 210." *Id*., 7:6-21. The sensor 212 may include "LIDARs." *Id*., 7:45-27. Magnets 220 form the rotor elements. *Id*., 8:16-36.

Platform 230 "can be configured as a stator platform in a rotary joint configuration" and "formed from any combination of solid materials suitable for supporting the various components mounted or otherwise coupled to platform 330." *Id*., 8:54-67. For example, "platform 230 may comprise a circuit board that mounts one or more components (*e.g.*, interfaces 236, 238, sensor 290, etc.)." *Id*. Electromagnetic coil 240 forms the stator elements. *Id*., 9:32-34.

Figure 3A provides another view of the assembly, with stator/rotor platforms (310/330), and axis of rotation (306):

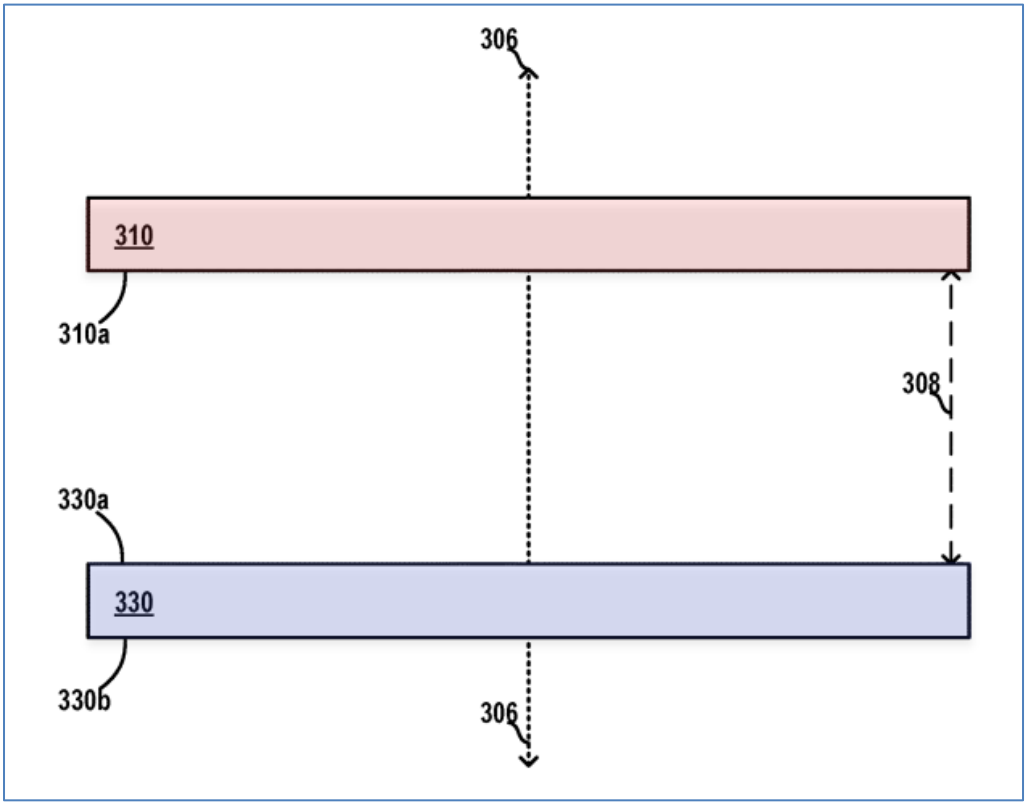

Id., Fig. 3A, 10:48-62.

Figures 3B-3C (left-right) show the underside of the rotor platform 310a and the upper side of the stator platform 330a:

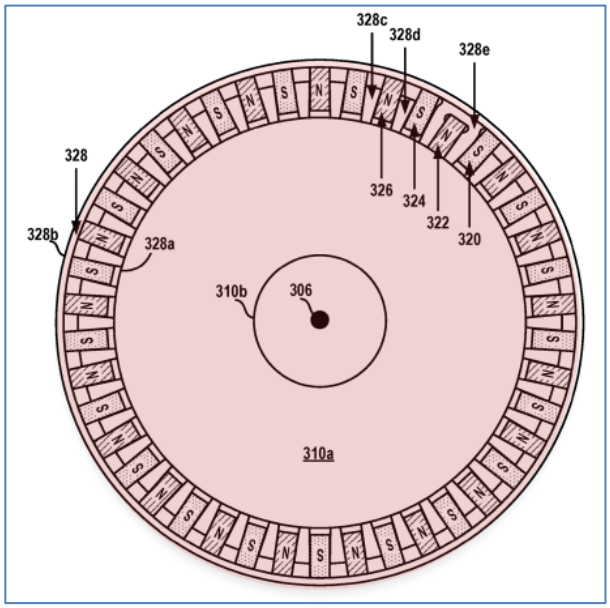

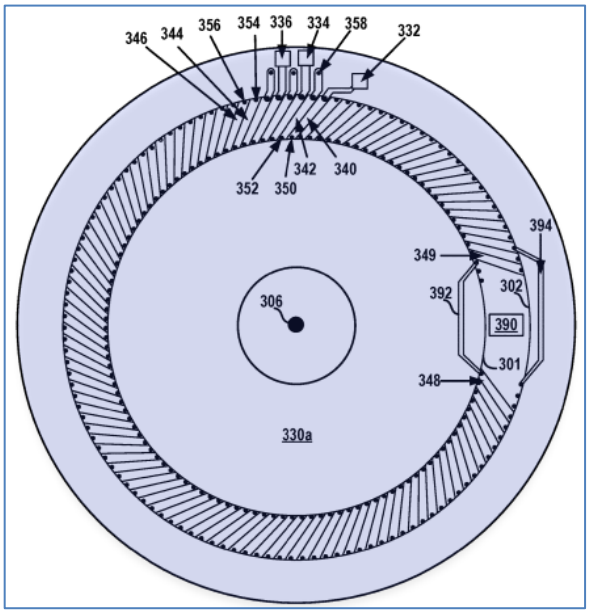

Id., Figs. 3B-C.

C. U.S. Patent No. 10,749,308 ("Pardhan")

Pardhan was filed October 17, 2016 and published April 19, 2018, and is thus prior art under 35 U.S.C. §102(a)(1)-(2). EX1006. Pardhan is analogous art to the '515 patent. EX1003, ¶99.

Pardhan is also assigned to Waymo and discloses a rotor-stator structure for sensing applications, such as LIDAR. *Id*., Fig. 3, 3:3-6, 16:65-17:5, 17:55-62. Figure 7B shows the rotor-stator structure. EX1006, 7:40-51. A hollow shaft 734 (green) extends upward along the axis of rotation from the stator plate (blue), and

the rotor plate (red) is coupled to a hollow sleeve 728 (gray) that fits over the shaft and rotates about the shaft via bearings 730/732:

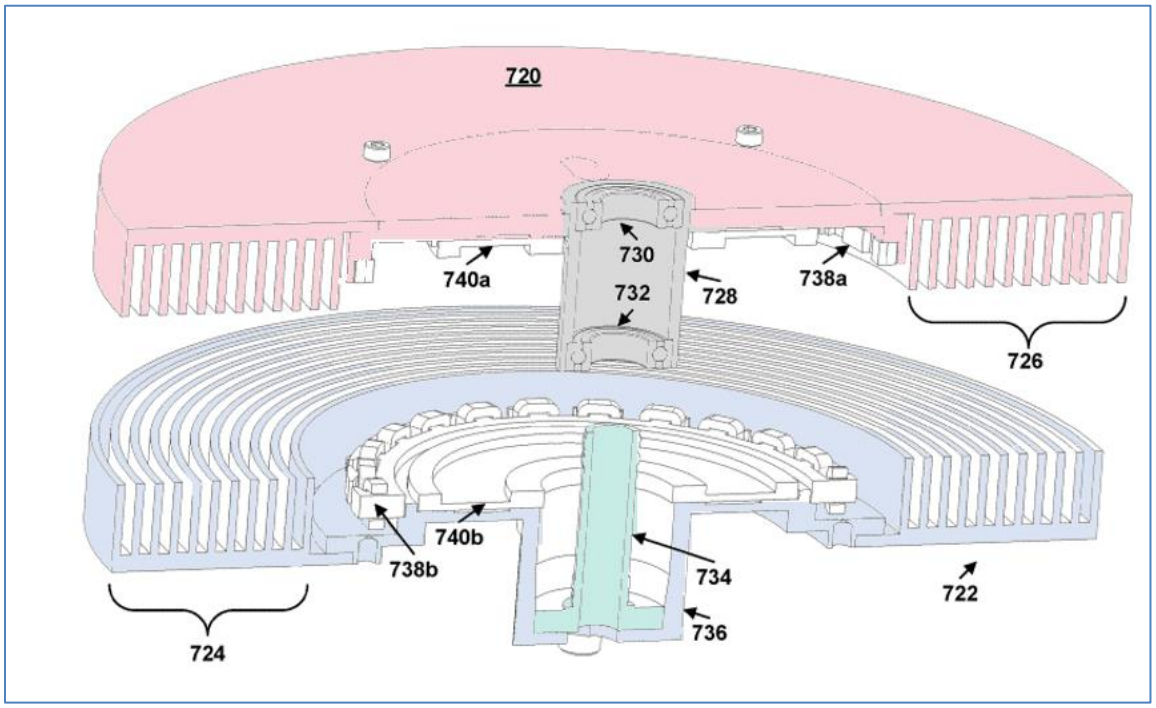

Id., Fig. 7B. The rotor plate 720 (along with its fins) may be manufactured as "one piece" that is made from a "metallic material with high thermal conductivity" so as to transfer heat away from the LiDAR device. *Id*., 18:6-19.

D. WO2018/201567 ("Zhang")

Zhang (EX1007) is a certified English translation of WO2018/201567 (EX1047). Zhang was filed June 16, 2017 as PCT/CN2017/088546 and published November 8, 2018, designating the United States, and is thus prior art under 35 U.S.C. §102(a)(1)-(2). EX1007. Zhang is analogous art to the '515 patent. EX1003, ¶104.

Zhang discloses a rotating structure for LiDAR. *Id*., Abstract. The device includes a stator (blue) and a rotor (red), as well as arms (purple) that extend outwards from the shaft with heat dissipation holes (green) disposed between each arm for transferring heat away from a LiDAR device mounted thereon:

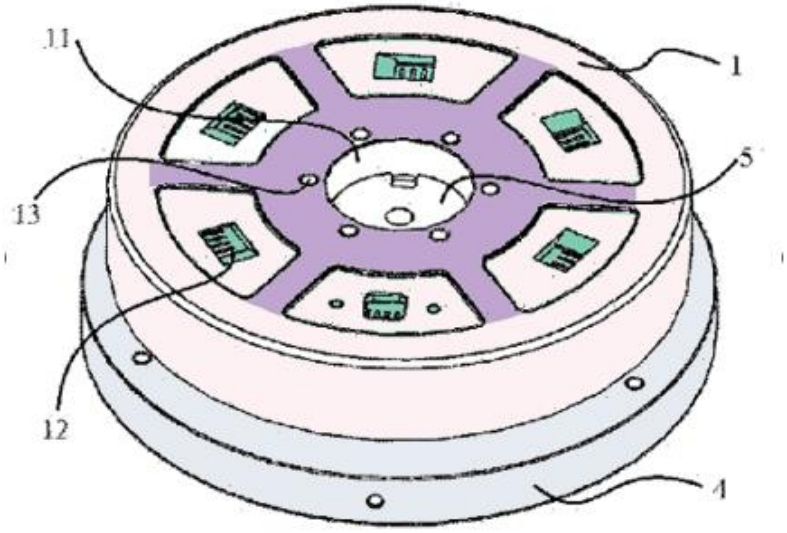

Id., Abstract, pg. 4, Figs. 1, 3; EX1003, ¶¶102-103.

E. The Pacala-Johnson-Pardhan-Zhang Combination

In the proposed Pacala-Johnson-Pardhan-Zhang combination, Pacala's teachings provide the overall structure of a rotating LiDAR system, including an enclosure with a 360-degree window that encloses a rotating platform on which a LiDAR sensor is mounted, as well as optoelectronic components detailed in Pacala, such as bulk transmitter and receiver optics, illumination sources, and detector circuitry (*see* Section IX.A). EX1003, ¶¶135-136.

Pacala, however, does not detail the implementation of its rotating structure. Thus, the combination relies upon Johnson and Pardhan—two Waymo patents—for those details. These references disclose a rotor-stator structure for sensor applications such as LiDAR that can be implemented within the static base and spinning turret of Pacala. EX1003, ¶¶137-140. Johnson details the arrangement of the rotor and stator elements and electronics (*see* Section IX.B), while Pardhan discloses a support component for assembling the rotating structure that comprises a rotor plate (720), a stator plate (722), and a sleeve (gray) fitted over a hollow shaft with bearings 730/732 to support rotation (*see* Section IX.C).

The combined system would then be further improved by implementing Zhang's teaching of a support component that extends away from the sleeve with heat dissipation holes positioned between each arm (*see* Section IX.D). This way the support component is better able to transfer heat away from a LiDAR device and prevent overheating. EX1003, ¶142. Additionally, a POSITA would have understood that "[i]n normal motor operation, bearings must be held in their positions firmly," and that Pardhan could be improved by using known bearing assembly designs that include arms to provide firm attachment to the rotor platform. EX1031, 329-331; EX1003, ¶141.

A POSITA would have also been motivated to combine the teachings of these references and would have had a reasonable expectation of success for the reasons discussed in the analysis below and in Section IX.12.

1. Claim 14[2]

a) 14(a)

To the extent the preamble is considered a limitation, the Pacala-Johnson-Pardhan-Zhang combination discloses a light ranging system. *See* Section IX.E; EX1003, ¶¶144-146.

b) 14(b)

The Pacala-Johnson-Pardhan-Zhang combination discloses limitation 14(b). EX1003, ¶¶147-149. For example, Pacala teaches an enclosure 10 having a base 20, a top cover 30, and window 40 disposed between the base and the top cover:

[2] The corresponding text for each numbered limitation is identified in the Listing of Claims. *See supra*, page vii-xv.

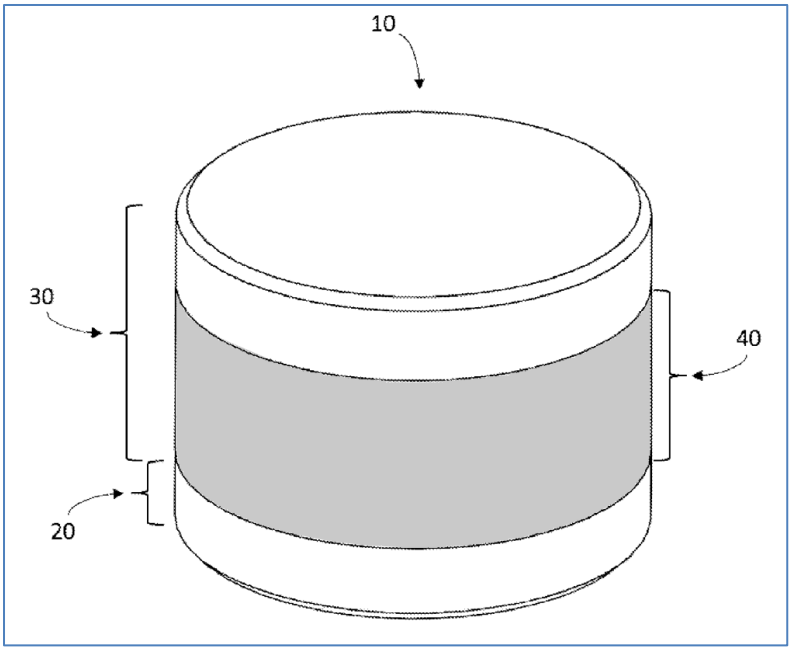

EX1004, Fig. 1. The window 40 is "transparent at the wavelength of the laser used in each transmitter." *Id*., [0012]. Thus, it is "optically transparent" around the entire enclosure. EX1003, ¶¶149.

c) 14(c)

The Pacala-Johnson-Pardhan-Zhang combination discloses limitation 14(c). EX1003, ¶¶151-155.

Johnson teaches a rotor-stator structure that includes a rotor platform 310 (red) which rotates about axis of rotation 306 relative to a static stator platform 330 (blue):

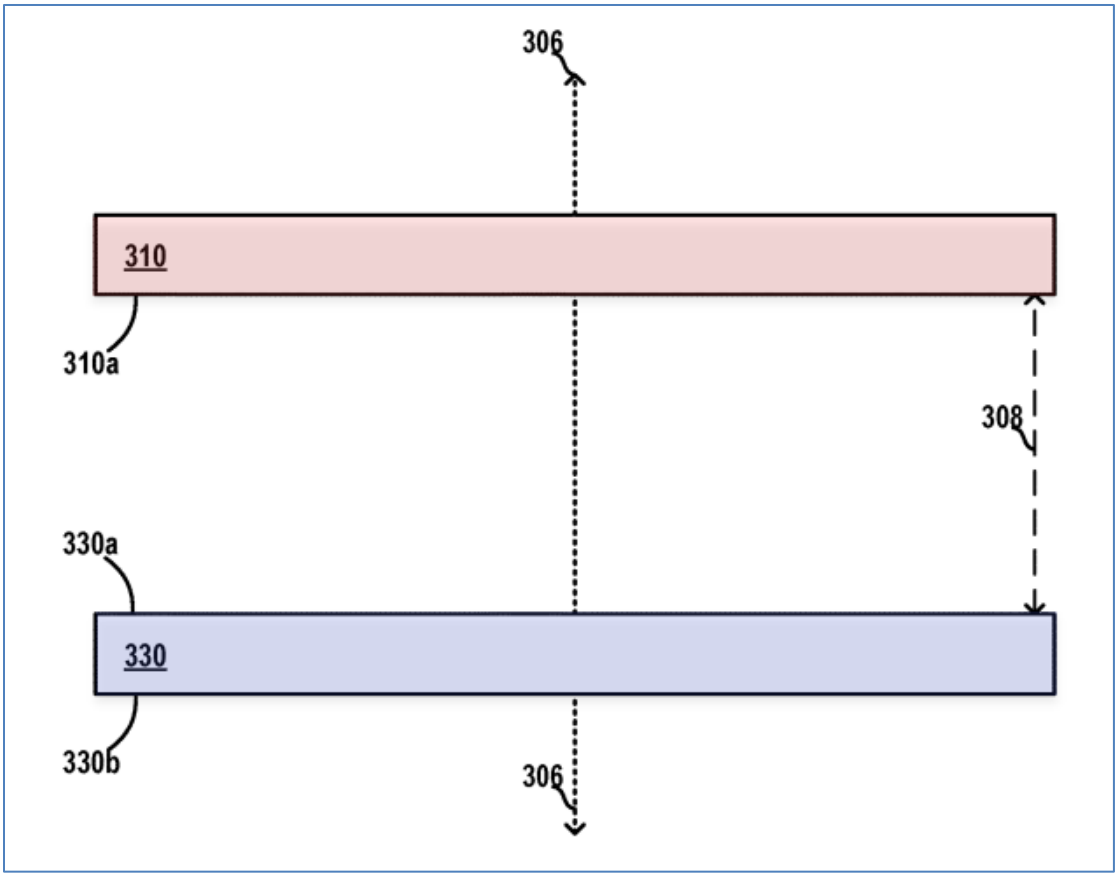

EX1005, Fig. 3A, 10:48-62.

Although a POSITA would have understood that rotation along the axis is about a shaft (EX1003, ¶153), Johnson does not expressly disclose that structure. Pardhan, however, discloses a rotor-stator structure where the stator plate (blue) is coupled to a hollow shaft 734 (green) extending upward along the axis of rotation, and the rotor plate (red) is coupled to a hollow sleeve 728 (gray) that fits over the shaft and rotates about the shaft via bearings 730/732:

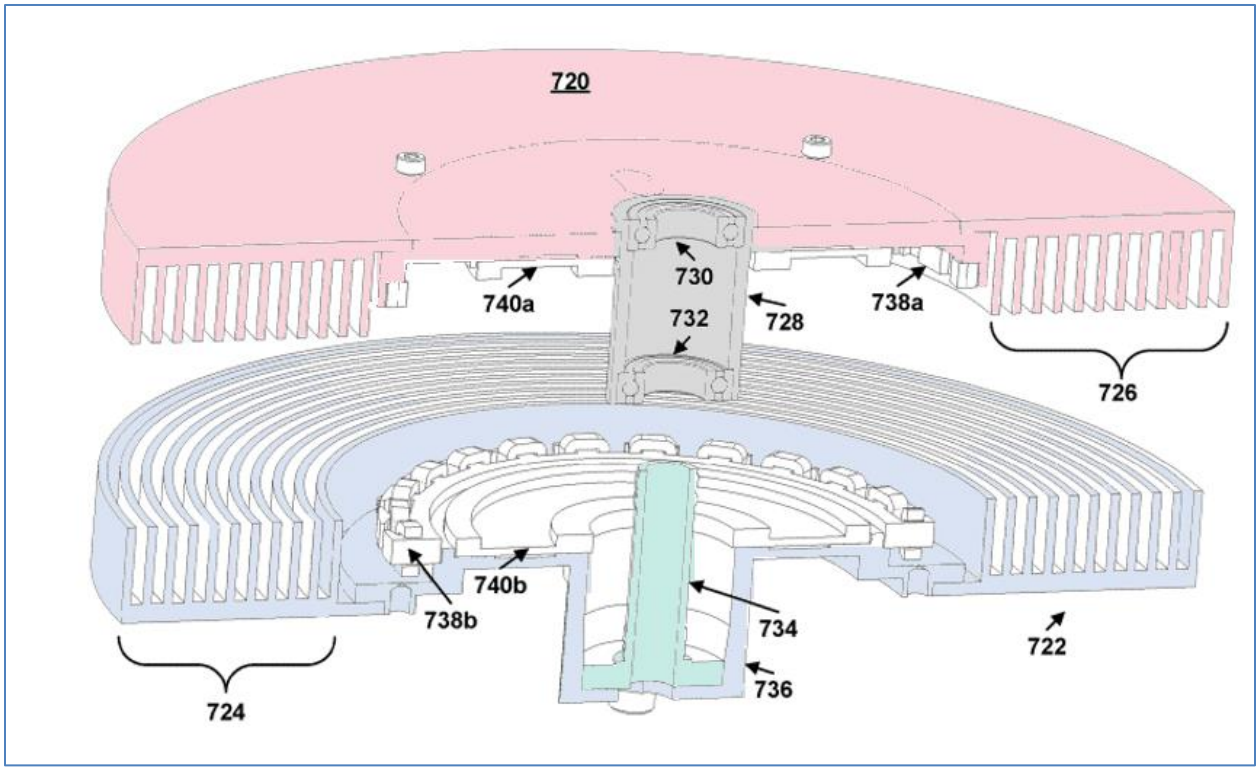

EX1006, 20:40-63, 21:42-45, Fig. 7B.

Thus, in the combined system, the rotor-stator structure taught by Johnson-Pardhan that includes a shaft is implemented within Pacala's enclosure to provide "a more compact design and/or efficient use of space." EX1003, ¶152 (citing EX1045, 4:1-6). Additional reasons to combine are discussed in Sections IX.E.12.

d) 14(d)

The Pacala-Johnson-Pardhan-Zhang combination discloses limitation 14(d). EX1003, ¶¶157-159.

Johnson discloses a stator circuit board. For instance, stator platform 330 may comprise a "planar mounting surface" that is implemented as "a multi-layer circuit board (e.g., PCB) or may comprise a multi-layer PCB." EX1005, Abstract, 10:57-

63, 11:66-12:17, Fig. 3A. For instance, Figures 3C-3D illustrate two layers of a stator circuit board:

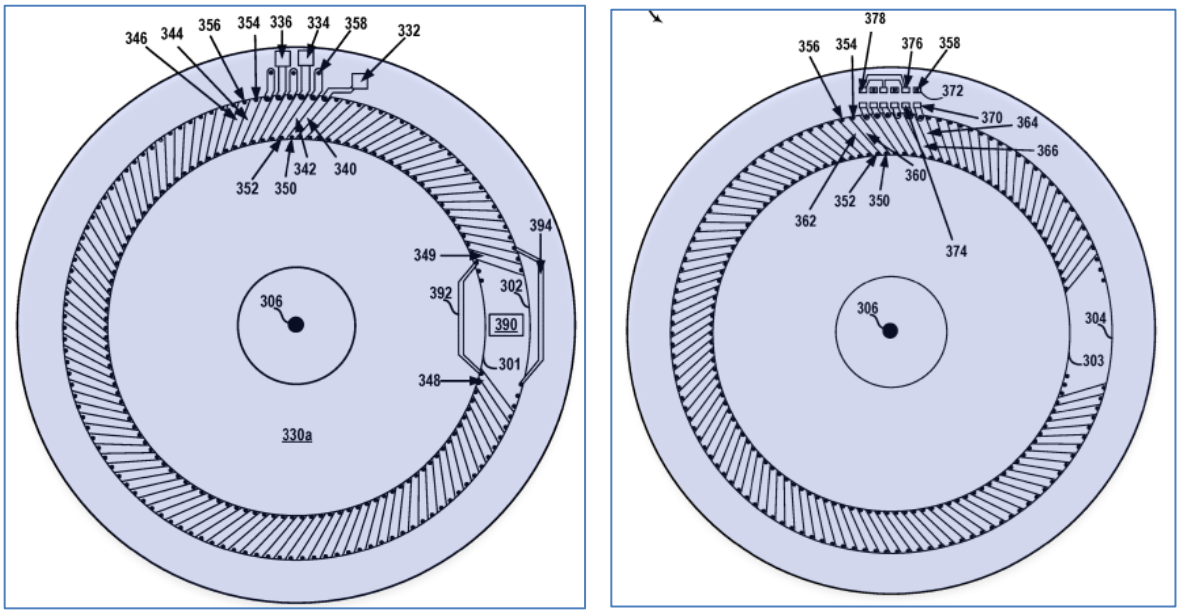

EX1005, Figs. 3C-3D, 11:66-12:18. The upper layer (Figure 3C) may be disposed along top side 330a of the stator platform, while the lower layer (Figure 3D) may be "substantially parallel to side 330a," *e.g.*, "between sides 330a [top] and 330b [bottom]." *Id*. Johnson also teaches that a layer may be disposed along bottom side 330b. *Id*.

The stator circuit board is disposed along a plane perpendicular to the axis of rotation. For instance, the stator platform may include parallel circuit board layers along the top and bottom sides (330a and 330b), such that each layer is along a plane perpendicular to the axis of rotation 306:

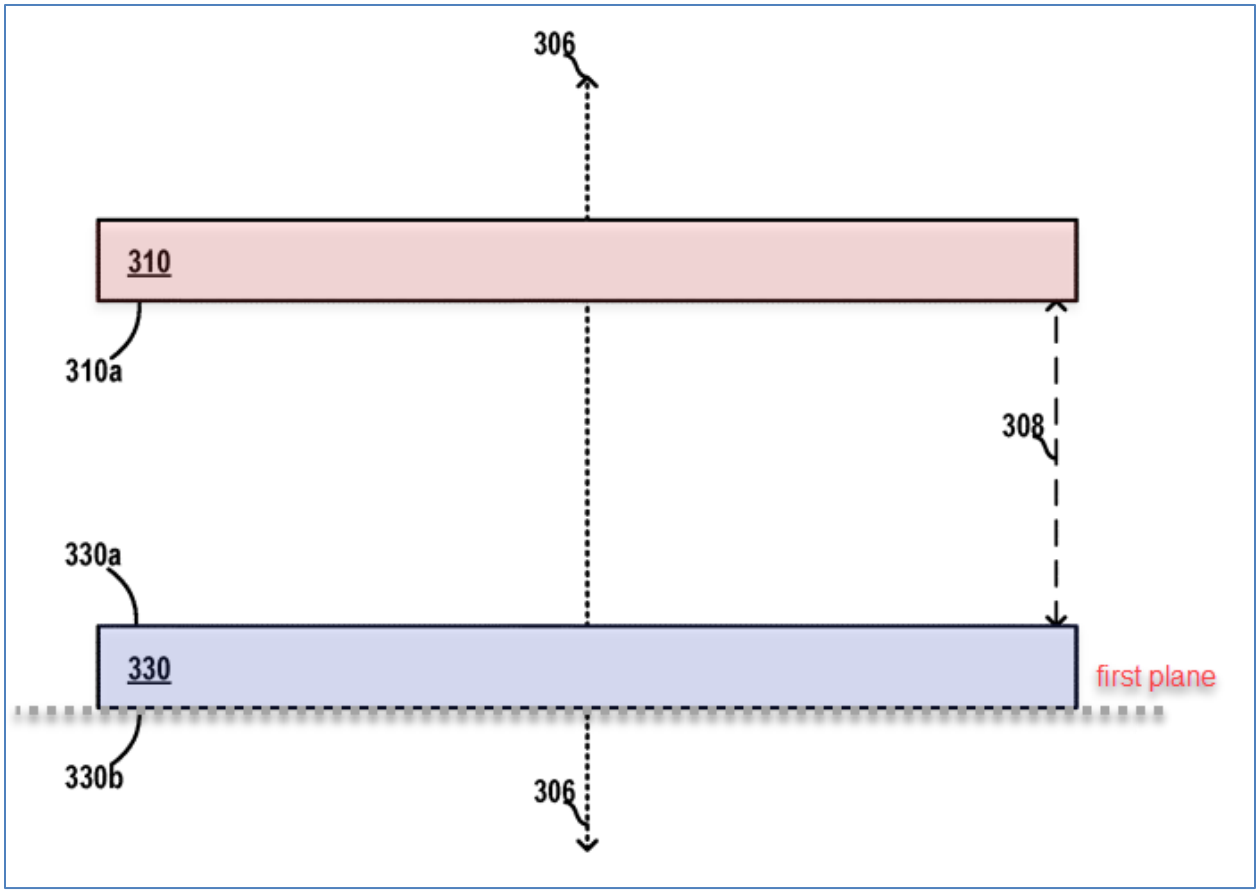

EX1005, Fig. 3A, 10:48-62.

Johnson renders obvious fixedly coupling the stator circuit board to the base of Pacala's enclosure. Johnson teaches that the stator platform is fixed relative to rotation of the rotor platform, and is the lower-most layer of the device. EX1005, 6:64-7:28, 10:47-62, Figs. 2-3A. Thus, a POSITA would have understood that Pacala's static base is a logical place to mount the stator platform and circuit board. EX1003, ¶159. This teaching is reinforced by Pardhan, which illustrates the stator platform mounted to the enclosure base. EX1006, Figs. 7A-7B. Additional reasons to combine are discussed in Sections IX.E.12.

e) 14(e)

The Pacala-Johnson-Pardhan-Zhang combination discloses limitation 14(e). EX1003, ¶¶160-166.

Pardhan discloses a support component that comprises rotor plate 720 (red) and sleeve 728 (gray), which is fitted over shaft 734 (green) and is rotationally coupled to the shaft via bearings 730/732:

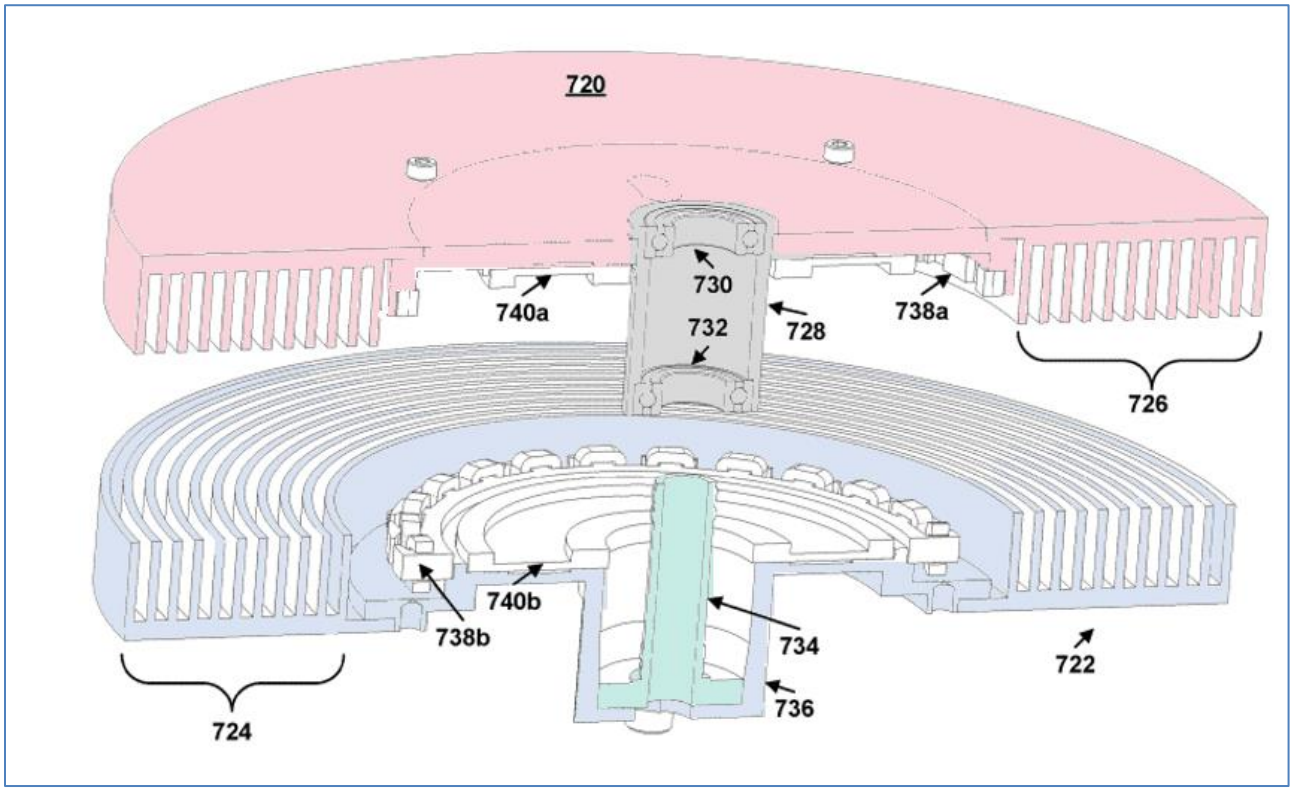

See EX1006, Fig. 7B. The sleeve is a cylindrical tube, and thus satisfies this limitation under any party's proposed construction of "sleeve." EX1003, ¶161.

Pardhan's support component includes an upper collar that extends outwardly from the sleeve and rests on rotor plate 720, but does not include arms:

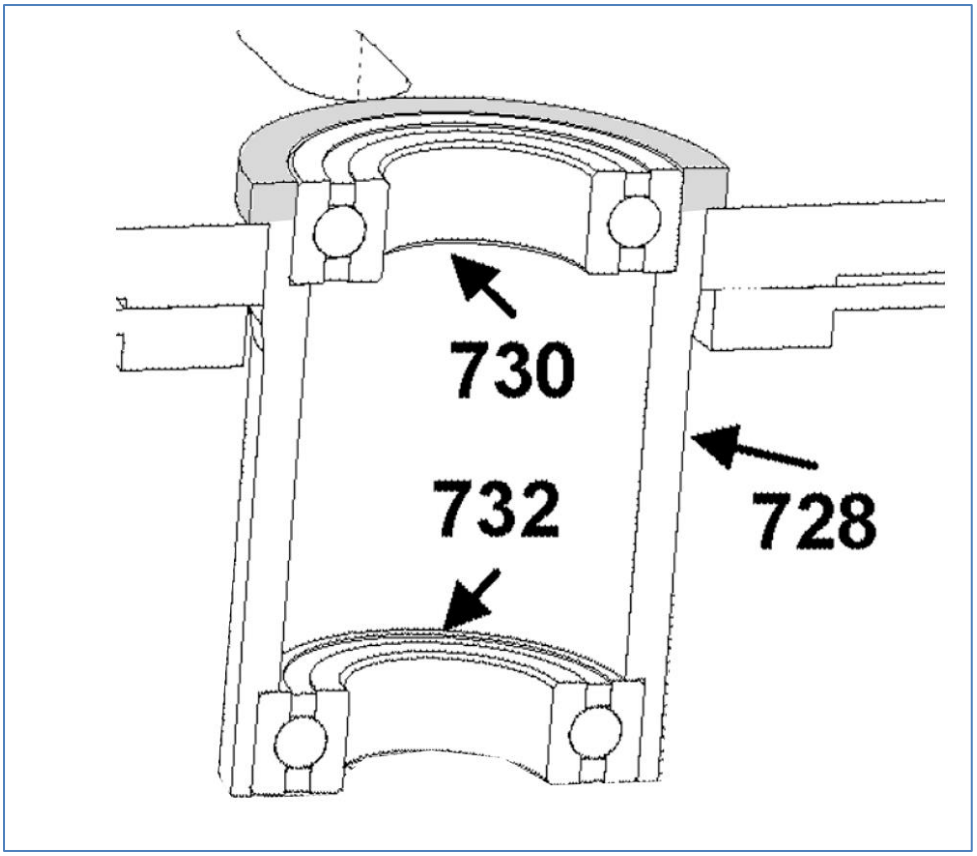

EX1006, Fig. 7B. However, a POSITA would have found it obvious to modify Pardhan to include arms. EX1003, ¶¶164-166.

First, a POSITA would have made such modification to strengthen the attachment of the sleeve to the rotor plate. *Id*., ¶164. Pardhan's sleeve provides a housing for bearings 730/732. *Id.*; EX1006, 20:40-63. Numerous bearing housing designs were known by the priority date, including the designs below with arms (purple) for strengthening the attachment of the sleeve to the rotor plate:

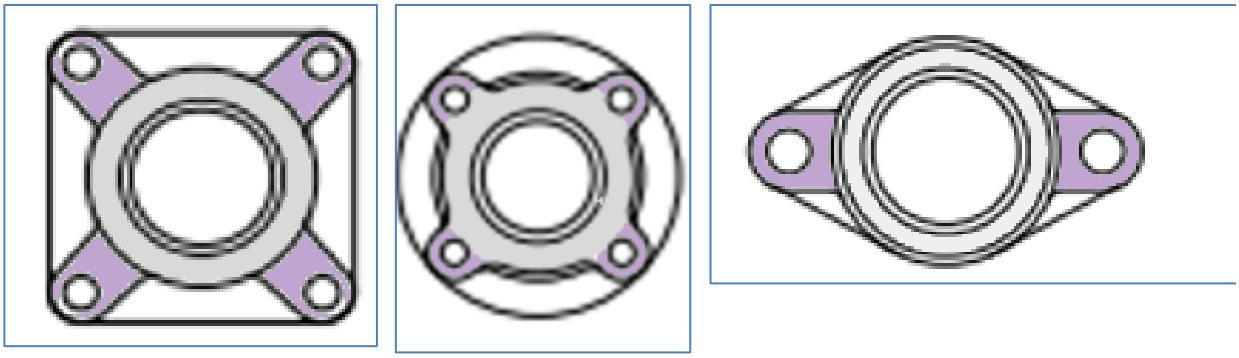

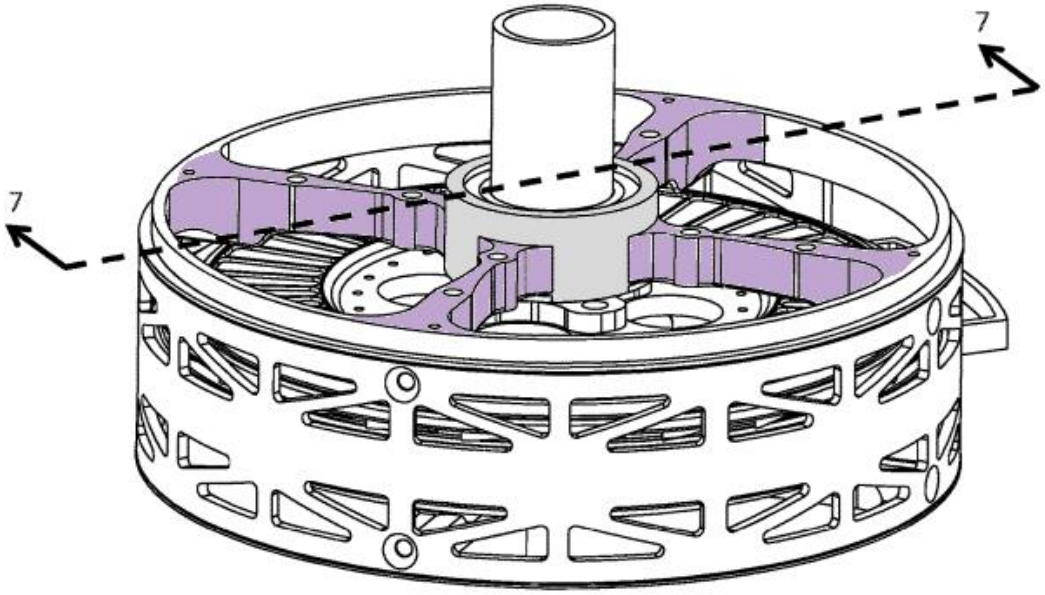

Exs. 1033, 16 (top), 1042, Fig. 6 (bottom), 6:40-47; *see also* EX1003, ¶¶164, 60-62.

Additionally, Zhang also discloses a support component with a plurality of arms that prevents a LiDAR device from overheating. *Id.*, ¶165. The support component is shown below with arms (purple) extending outwards from a "hollow shaft" and heat dissipation passages (green) positioned between the arms:

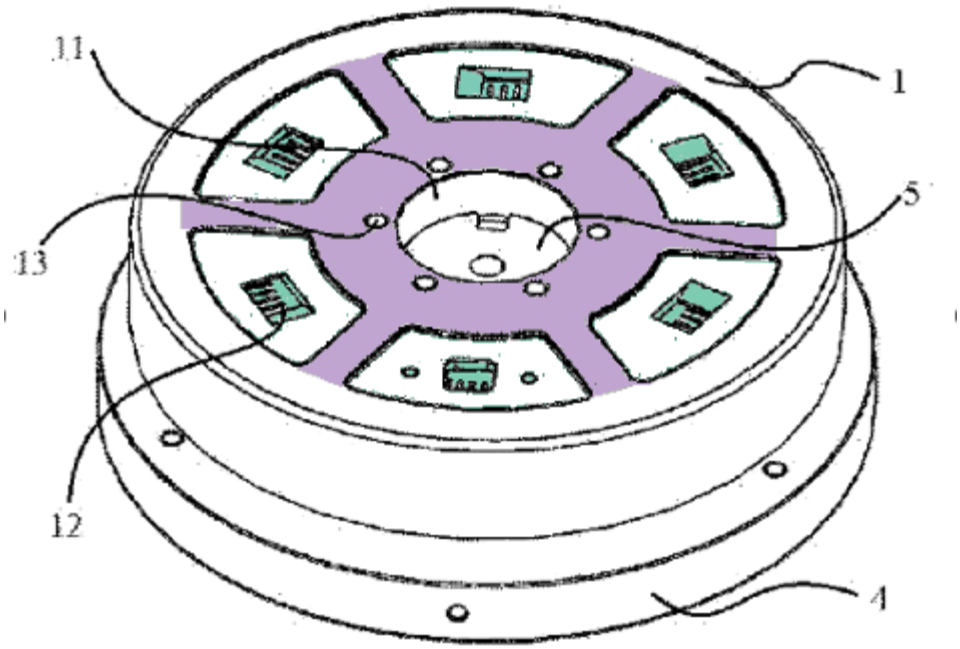

EX1007, Fig. 1, 6 ("at least one hollowed-out heat dissipation hole is configured on the end face of rotor."). In view of Zhang, a POSITA would have combined Pardhan's support component that includes sleeve 728 and bearings 730/732 with Zhang's arms on the upper surface of the support component to prevent overheating. EX1003, ¶165. Additional reasons to combine are discussed in Sections IX.E.12.

f) 14(f)

The Pacala-Johnson-Pardhan-Zhang combination discloses limitation 14(f). EX1003, ¶¶167-168.

Pardhan's bearings 730/732 are coupled between the shaft and sleeve of the support component. *See* Section IX.E.1(e). The bearings allow rotation about the shaft 734 along the axis of rotation. EX1006, 20:51-64.

g) 14(g)

The Pacala-Johnson-Pardhan-Zhang combination discloses limitation 14(g). EX1003, ¶¶169-174.

Johnson discloses a rotor circuit board. For instance, rotor platform 310 (red) comprises a "side 310a" that is an "outer layer of a circuit board," such as that shown in Figure 3B:

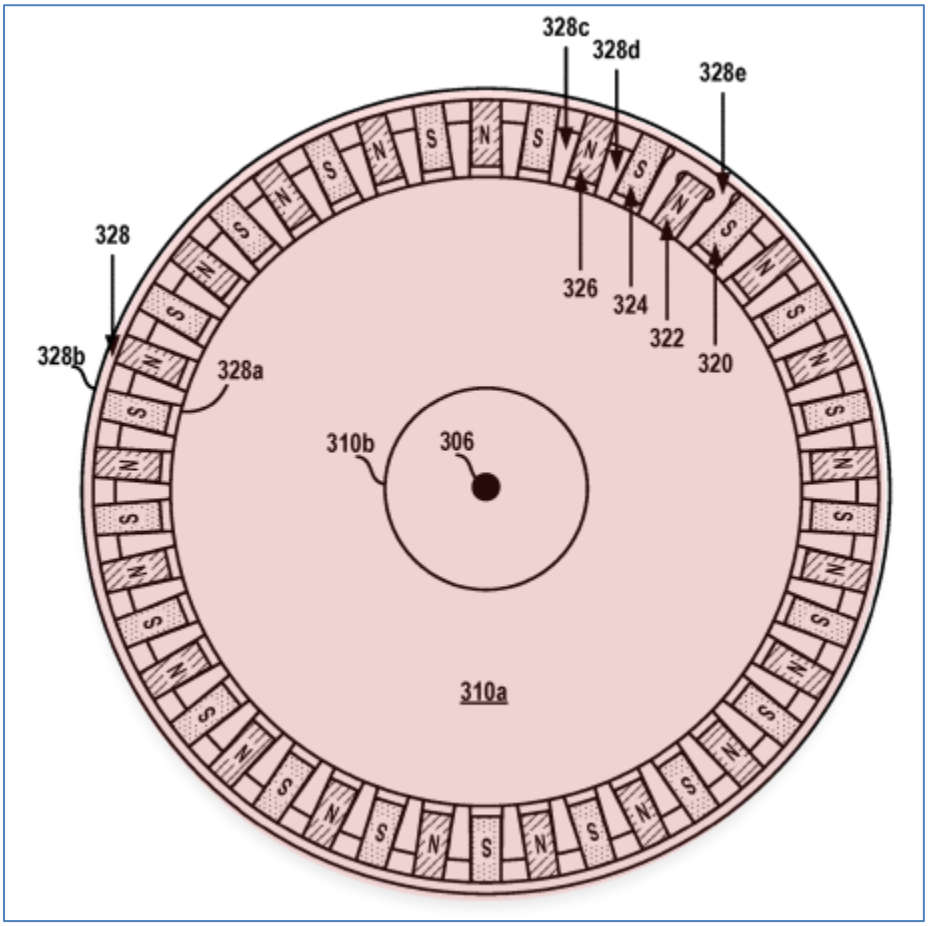

EX1005, Fig. 3B, 10:58-11:65.

This circuit board is disposed along a plane parallel to the first plane (defined by stator platform (330)). *See* Section IX.E.1(d). Johnson teaches that the rotor

platform (310) is "planar mounting surface"; thus, the rotor circuit board on side 310a is parallel to the plane of the stator platform (330), as shown in Figure 3A:

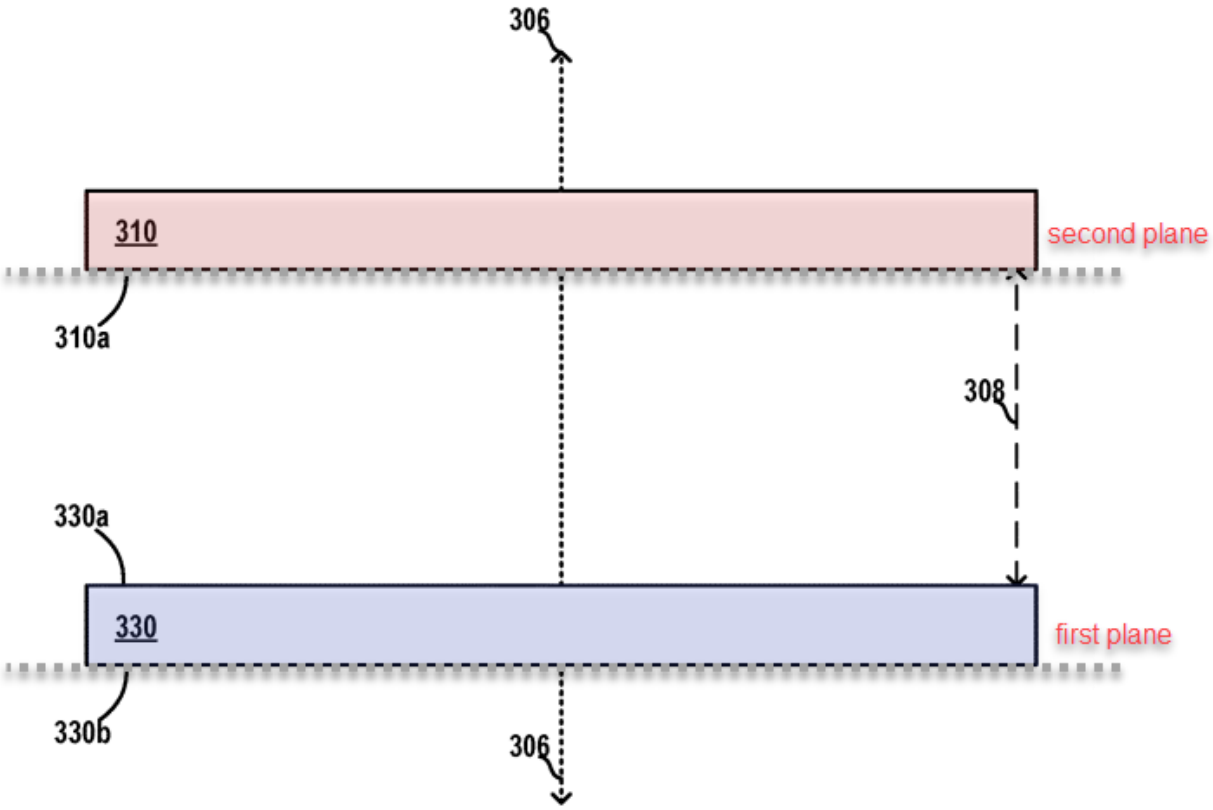

EX1005, Fig. 3A, 10:47-63.

Johnson and Pardhan render obvious that the rotor circuit board is coupled to rotate with the support component. Pardhan discloses a support component that rotates about a shaft. *See* Section IX.E.1(e). Johnson states that its rotor circuit board "rotates about the axis of rotation 306" defined by the shaft (EX1005, 10:47-63). It would have been obvious for a POSITA to couple the rotor circuit board shown in Figure 3B of Johnson to the support component of Pardhan. EX1003, ¶¶172-174.

The prior art includes express teachings that would motivate a POSITA to combine the references in this manner. EX1003, ¶173. A POSITA would have been motivated to implement Pardhan's support component with Johnson's rotor circuit board because the support component can be made of a "metallic material with a high thermal conductivity" that transfers excess heat away from the LiDAR sensor, thereby allowing the device to avoiding overheating. EX1006, 4:54-5:7, 18:6-14. The prior art further teaches that in the combined system Johnson's rotor circuit board should be positioned on the underside of Pardhan's support component. For instance, Johnson states that the components of its system "may be implemented… in any suitable combination and location" (EX1005, 19:66-20:4), and the underside of Pardhan's support component is a suitable (and desirable) location for the rotor circuit board because it allows the motor magnets and transformer coils to face the corresponding elements on the stator circuit board for efficient operation. In fact, Pardhan itself teaches that the rotor elements (*e.g.*, magnets 738a and transform windings 740a) should be positioned in this arrangement, as shown below:

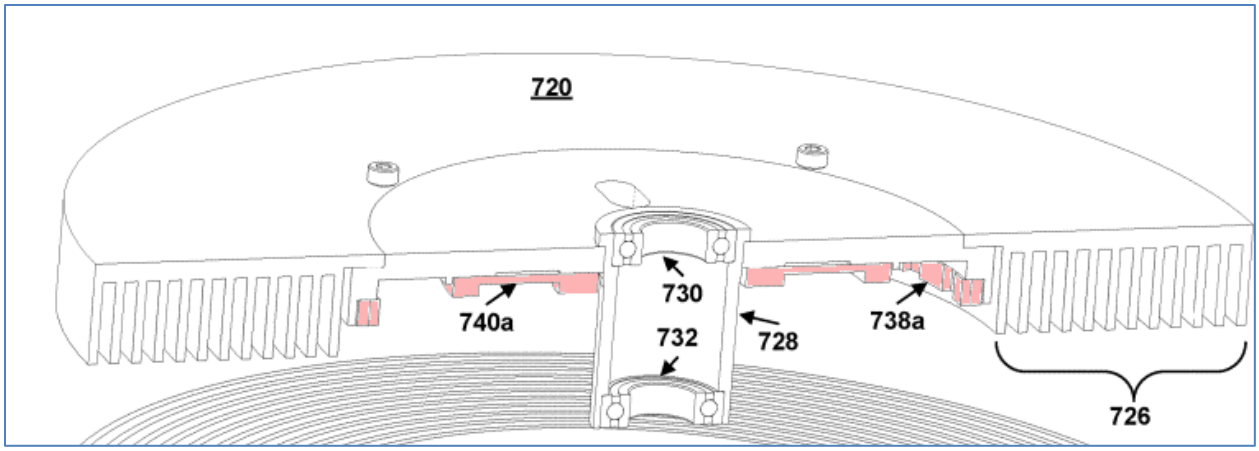

EX1006, 20:40-21:13, Fig. 7B. Although Pardhan mounts the rotor elements directly to the rotor plate, a POSITA would have understood that utilizing an intermediary circuit board, as taught in Johnson, was desirable because the various electronic components of the rotor would benefit from simplified electrical connections, reduced electronic noise, and a more compact design when a circuit board is utilized. EX1003, ¶173. Additional reasons to combine are discussed in Sections IX.E.12; EX1003, ¶¶243-245.

Finally, because the LiDAR devices of both references are mounted atop the rotor platform (EX1006, 1:41-43, 16:51-64, Fig. 4; EX1005, 7:22-27, Fig. 2), the resulting structure will have the plane of the rotor circuit board between the first plane (the stator circuit board) and the top of the enclosure. EX1003, ¶174.

h) 14(h)

The Pacala-Johnson-Pardhan-Zhang combination discloses limitation 14(h). EX1003, ¶¶175-180.

Johnson's stator circuit board (*see* Section IX.E.1(d)) is coupled to a stator assembly comprising a plurality of stator elements arranged annularly about the rotation axis. For instance, Figures 3C-3D are layers of Johnson's stator circuit board that include "conductive structures" (e.g., 340) "in a circular arrangement around axis 306," contacts (*e.g.*, 332), interconnects (e.g., 350) and a Hall sensor (390):

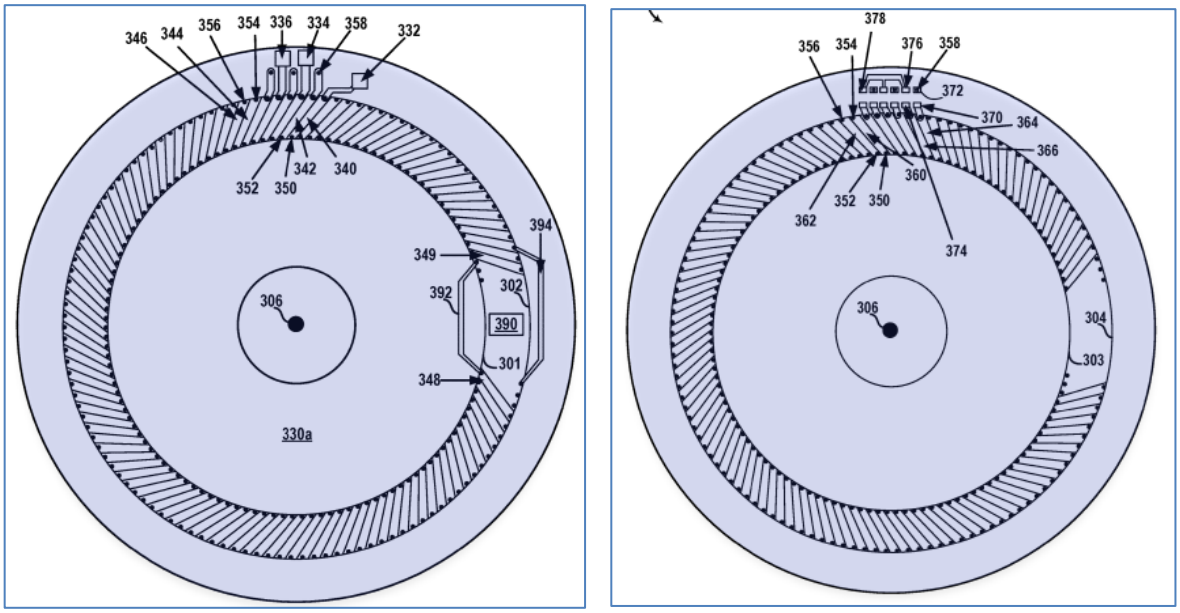

EX1005, Figs. 3C-3D, 11:66-12:13, 3:40-64. The stator elements are "mounted to" the stator circuit board (*id.*, 15:34-42, 11:66-12:18, 8:62-68), such that they are "coupled to" the circuit board under any proposed construction. EX1003, ¶182.

The conductive structures may be "coupled to one another to form a plurality of coil windings" around axis 306. EX1005, 13:14-50, 4:56-5:8. For example, "a first coil winding" may comprise "structure 340, interconnect 350, structure 360, interconnect 354, structure 344, etc., through structure 364" and a "second coil

winding" may comprise "structure 342, interconnect 352, structure 362, interconnect 356, structure 346, etc., through structure 366." *Id*., 13:26-40.

i) 14(i)

The Pacala-Johnson-Pardhan-Zhang combination discloses limitation 14(i). EX1003, ¶¶181-183

For instance, Figure 3B of Johnson shows a rotor assembly with magnets mounted concentrically on the rotor circuit board around the axis of rotation (306), and the magnetic poles form an alternating pattern (*i.e.*, each magnetic pole has a polarity ("N" or "S") opposite the polarity of adjacent poles):

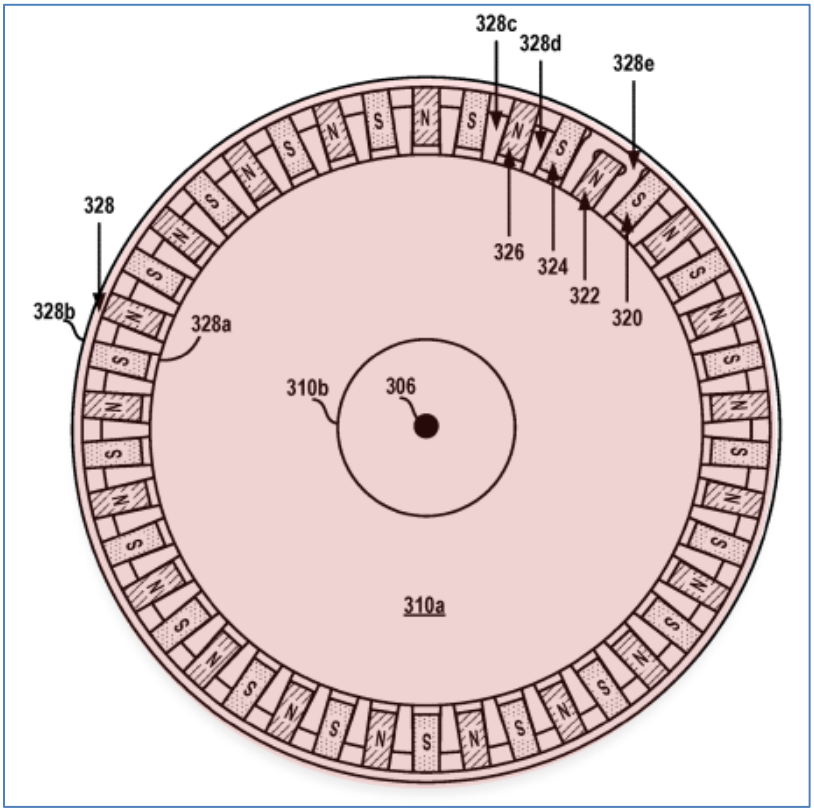

EX1005, Fig. 3B, 8:26-30, 11:1-15. Johnson teaches the magnets are "mounted to" the rotor circuit board (*id*., 11:15-21, 11:64-65, 7:6-21), such that they are "coupled to" the rotor circuit board under any party's proposed construction. EX1003, ¶¶182-183.

j) 14(j)

The Pacala-Johnson-Pardhan-Zhang combination discloses limitation 14(j). EX1003, ¶¶184-190.

Pacala teaches a LiDAR that is mounted on a rotating turret 60 within the enclosure, and rotates about a fixed base. EX1004, [0012]-[0013], Figs. 1-2. Johnson and Pardhan similarly teach mounting a LiDAR device to the top of the rotor platform. EX1005, 11:20-52; EX1006, 10:1-41. A POSITA would have thus mounted Pacala's LiDAR device on the top surface, such that it would rotate with the rotor circuit board mounted on the bottom surface. EX1003, ¶190.

Pacala's LiDAR device includes a transmit module comprising a bulk transmitting optic 80 (*i.e.*, focusing lens) and illumination source (*i.e.*, laser transmitters) to transmit pulses of electromagnetic radiation (i.e., laser) through window 40 to the surrounding environment. EX1004, [0004], [0012]-[0013], Fig. 2. Pacala's light ranging device further includes a receive module comprising a bulk receiver optic 80 (i.e., focusing lens) and detector circuitry (*i.e.*, a SPAD array and TDC circuitry) to detect reflected portions of the radiation pulses received through

window 40. *Id.*, [0004], [0012]-[0014]. The transmit module (blue) and receive module (orange) are illustrated below:

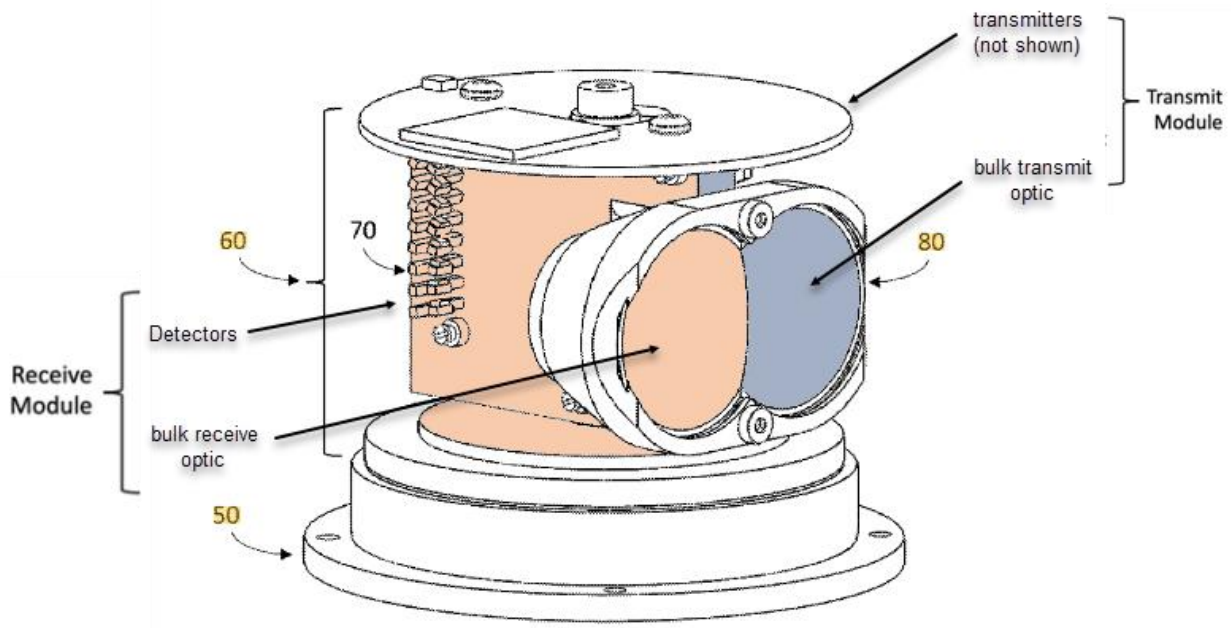

Fig. 2

Id., Fig. 2.

k) 14(k)

The Pacala-Johnson-Pardhan-Zhang combination discloses limitation 14(k). EX1003, ¶¶191-194.

Johnson discloses a stator driver circuit configured to provide a drive signal to the stator elements in the stator assembly. For instance, Johnson discloses circuity 150/250 (and controller 234) on the stator platform that provides a drive signal, *i.e.*, causes an "electrical current to flow through" the plurality of "coil windings." EX1005, 18:6-24, 9:35-47, 6:35-48, Fig. 1-2. The drive signal "causes a torque or

force" that rotates the rotor circuit board about axis 406. *Id*., 13:51-58. As discussed in Section IX.E.1.c, the stator platform on which the stator driver circuit is mounted is implemented within the enclosure of Pacala. *See also* Section IX.E.12.

2. Claim 1

a) 1(a)

Section IX.E.1(a); EX1003, ¶195.

b) 1(b)

Section IX.E.1(b); EX1003, ¶196.

c) 1(c)

Section IX.E.1(c); EX1003, ¶197.

d) 1(d)

Section IX.E.1(d); EX1003, ¶198.

e) 1(e)

Section IX.E.1(e)-(f); EX1003, ¶¶199-200.

f) 1(f)

See Section IX.E.1(g); EX1003, ¶201.

g) 1(g)

Johnson discloses the claimed stator assembly and stator elements. *See* Section IX.E.1(h).

Johnson further teaches the stator assembly is disposed between the first and second planes. EX1003, ¶¶202-206. For instance, Johnson's stator circuit board

may be a multi-layer PCB with layers along the top and bottom sides (330a and 330b) of the stator platform. *See* Section IX.E.1(d). Johnson further teaches the stator assembly is mounted to the stator circuit board. *See* Section IX.E.1(h). When mounted, the stator assembly would thus be positioned between a first plane defined by the stator circuit board and a second plane defined by the rotor circuit board. EX1005, Figs. 3C-D, 11:66-12:27, 14:62-15:8; *see also* Section IX.E.1(f).

Johnson also teaches the coils are wound around a magnetic core. EX1003, ¶¶205-206. Johnson teaches that "a magnetically permeable core" "can be inserted between the two layers of FIGS. 3C and 3D" to "enhance[] the stator-platform magnetic field." EX1005, 14:1-10. For instance, a "ring shaped" core may be disposed in the middle layer of platform 330 "between the conductive structures of Figs. 3C and 3D," such that each coil would be wound about the core. *Id*; *see also id*., 5:41-56.

h) 1(h)

Johnson discloses the claimed rotor assembly and magnetic poles. *See* Section IX.E.1(i).

Johnson further teaches the rotor assembly is disposed between the first and second planes. EX1003, ¶¶207-209. For instance, the rotor circuit board in Figure 3B corresponds to an "outer layer of a circuit board" disposed on the bottom side (310a) of the rotor platform. EX1005, 10:55-60, Fig. 3A-B; *see also* Section

IX.E.1(g). Because the rotor assembly is mounted on the underside of the rotor platform and rotor circuit board (*see* Section IX.E.1(i)), the rotor assembly is positioned between a first plane (defined by the stator circuit board) and a second plane (defined by the rotor circuit board). EX1003, ¶209.

i) 1(i)

Section IX.E.1(j); EX1003, ¶210.

j) 1(j)

Section IX.E.1(k); EX1003, ¶211.

3. Claim 2

The Pacala-Johnson-Pardhan-Zhang combination renders claim 2 obvious. EX1003, ¶¶212-217.

Johnson discloses communication interfaces 216/236 that are mounted on the rotor and stator platforms to provide "wireless or wired communication":

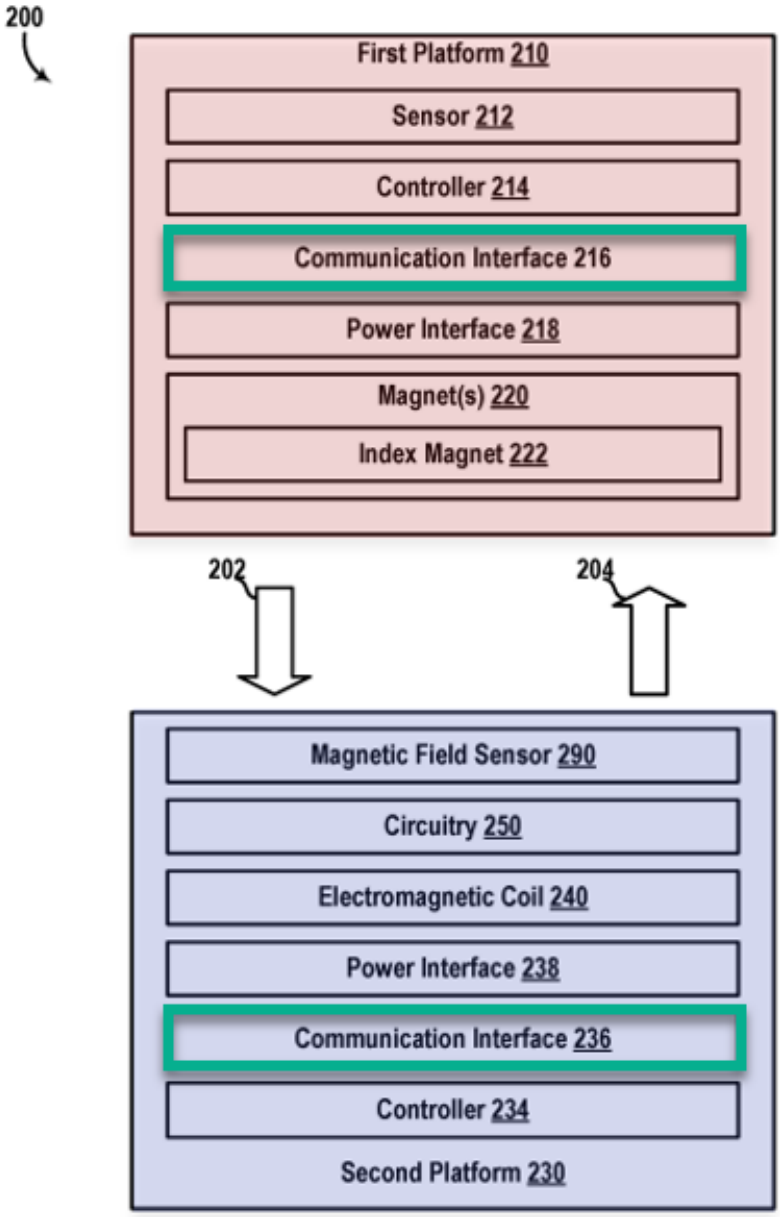

FIG. 2

EX1005, Fig. 2, 7:47-63, 9:1-18. The communication interface 216 transmits signal 202—*e.g.*, data from LiDAR sensor 212—to processor circuitry on the stator, and receives signals 204 for operating the sensor. *Id.*, 9:1-15.

Johnson does not expressly disclose the communication channel extends through a hollow shaft, but that would have been obvious in view of Pardhan. EX1003, ¶¶214-217. Figures 7A-7B of Pardhan shows that the rod/shaft is hollow:

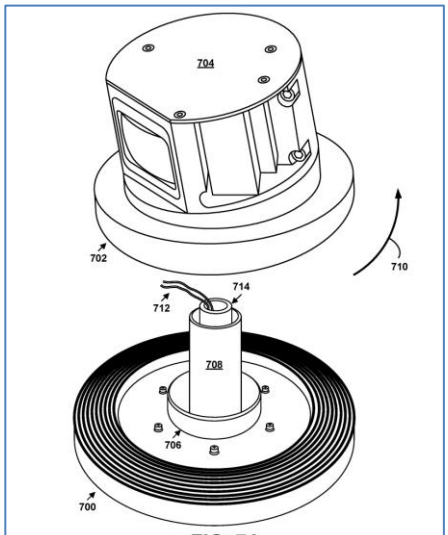

FIG. 7A

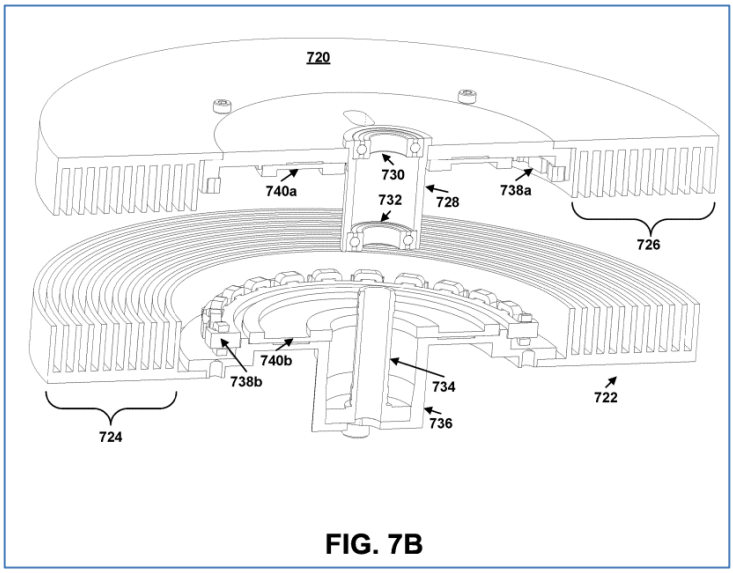

FIG. 7B

Id., Figs. 7A-7B. Pardhan explains: "wires including power and data connections may pass through rods 708 and 714 to connect the LiDAR device to a power source and a computing device." *Id*., 20:30-35. Zhang and Cai teach a similar hollow shaft for providing a communication channel, confirming this is a known technique. EX1007, Abstract, 3, 6; EX1008, [0011], [0030], Fig. 8. A POSITA would have been motivated to combine the teachings of Johnson and Pardhan—two Waymo patents—for the reasons discussed in Section IX.E.12.

4. Claim 4

The Pacala-Johnson-Pardhan-Zhang combination renders claim 4 obvious. EX1003, ¶¶218-234.

Johnson discloses the claimed "third circuit board." Johnson teaches that electronics of the stator platform may be mounted to different layers of a multi-layer PCB, comprising layers on the top and bottom sides (330a and 330b), as well as between the top and bottom sides. *See* Section IX.E.1(d). When combined with Pacala, the top layer of the PCB (on the top side of the stator platform) would be the stator circuit board, and the bottom layer of the PCB (on the bottom side of the stator platform) would be a "third circuit board" fixedly coupled to the base of the enclosure and positioned in a plane parallel to and between the base and the stator circuit board.

Johnson also teaches the claimed "fourth circuit board." For instance, Johnson teaches the rotor circuit board is an "outer layer of a circuit board" on the bottom side (310a) of the rotor platform. *See* Section IX.E.1(g); EX1005, 10:57-62. Johnson's disclosure of an "outer layer" to at least render obvious an "inner" layer of the circuit board on which additional electronics may be mounted. EX1003, ¶220; *see also* EX1005, 11:64-65. Indeed, Johnson discloses that components of the rotor platform may be mounted on a layer of the "printed circuit board (PCB) or <u>*other*</u> *circuit board*." EX1005, 11:61-65; *see also* EX1006, 6:35-41 ("various types of electronic components and/or systems" may be "disposed within the LIDAR device 100 in any feasible manner."). These additional inner layers or other circuit board would be a "fourth circuit board."

It would have also been obvious to implement the multi-layer PCB of Johnson using separate circuit board. The decision to use one multi-layer PCB or multiple single-layer PCBs is a design choice that presents no novel or unexpected results. EX1003, ¶222. Johnson itself teaches that a "multi-layer PCB" is "one implementation," and that "other implementations are possible." EX1005, 12:4-18. Johnson also states that the elements of its system may be provided in "any suitable combination and location." *Id*., 19:66-20:4. And a POSITA would have understood that multi-layer PCBs are more expensive and difficult to manufacture, such that it is preferable to employ separate PCBs in certain applications. *See* EX1040 ("The advantages of single-layer PCBs over other types of boards are numerous.").

Moreover, modifying Johnson to use separate circuit boards amounts to simple substitution of one known element (a multi-layer PCB) for another (separate PCBs) to obtain predictable results (electronics mounted on separate circuit boards). EX1003, ¶222.

Further, a POSITA would have recognized that LiDAR electronics may not fit within the space provided by a single stator and rotor circuit board, such that additional circuit boards are needed. EX1003, ¶223. The understanding of a POSITA is reflected in U.S. Patent No. 9,606,230 ("Nubling"), which teaches a prior art LiDAR device that, in one embodiment, includes a single rotor circuit board ("first circuit board (34)") and a single stator circuit board ("second circuit

board 42"), and explains that "further circuit boards" may be needed to provide additional "space and capacity" for mounting system electronics. EX1043, 6:1-8 ("more circuit boards can be provided" for "sufficient space and capacity."), 3:36-40 ("further circuit boards"), 2:62-3:3 (same), Fig. 3.

Accordingly, a POSITA would have found it at least obvious to implemented the claimed "third circuit board" and "fourth circuit" board to provide additional space for mounting system electronics.

5. Claim 5

A POSITA would have mounted Pacala's LiDAR device within its housing, mounted the transmit module to a first portion of the device, and mounted the receive module to a second portion of the device directly adjacent to the first portion to form a compact design. EX1004, Figs. 1-2; EX1003, ¶225-227. In view of Johnson's teachings, the fourth circuit board would have been implemented as part of Pacala's rotating turret 60, such that the LiDAR device and housing are disposed between the top of the enclosure and the fourth circuit board as illustrated below:

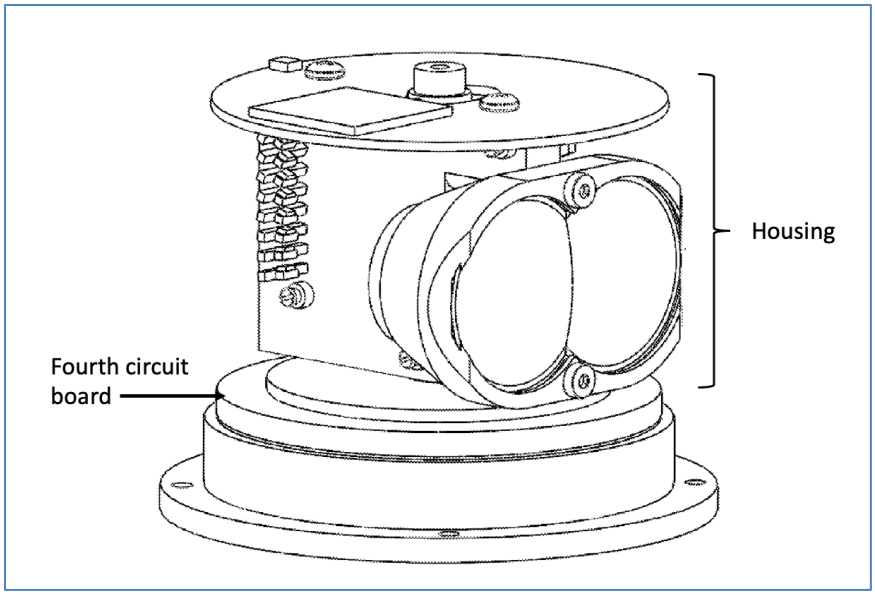

EX1004, Fig. 2; *see also* Section IX.E.4.

6. Claim 6

A POSITA would have understood from Pacala's disclosures that the emitters and associated electronics (*e.g.*, firing circuits) are positioned behind the bulk transmit optic, and the most straightforward manner for mounting these components is on a vertically mounted circuit board. *Id.* The same would have been true with respect to the detectors and associated circuitry behind the bulk receive optic of the receive module—they would similarly have been mounted on a separate vertically mounted circuit board:

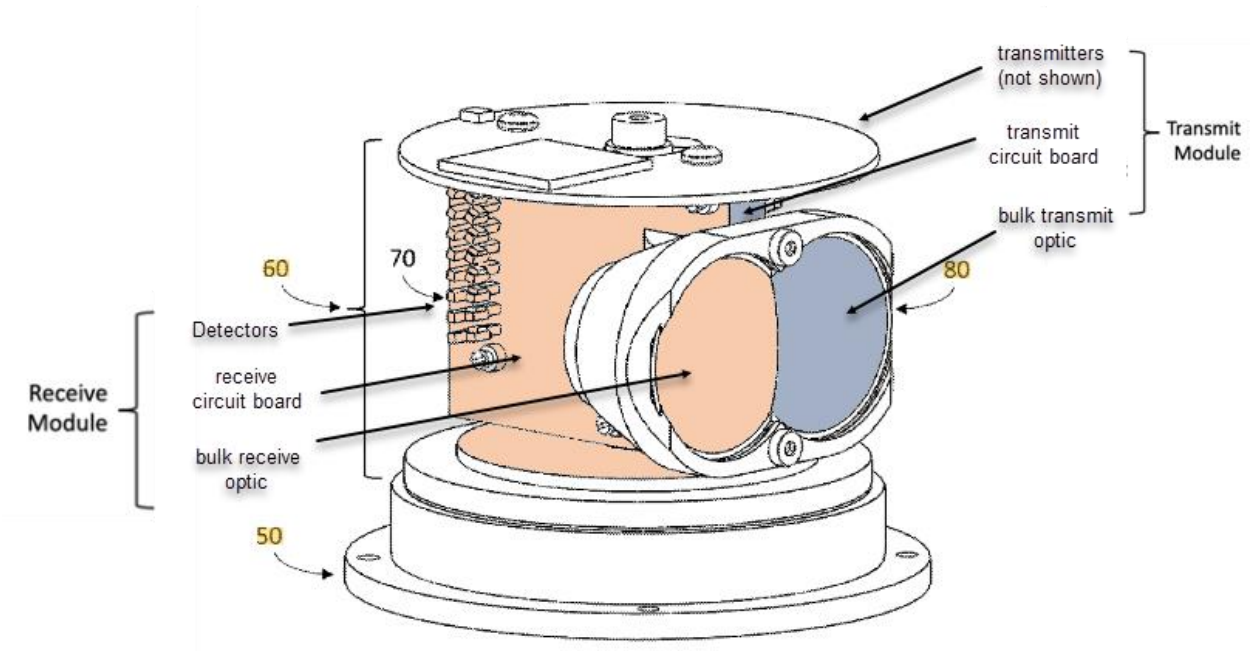

Fig. 2

EX1004, Fig. 2, [0012]-[0014]; *see also* EX1003, ¶229. In the combined structure, the transmit and receive circuit boards comprise fifth and sixth circuit boards positioned parallel to the axis of rotation as shown above. EX1003, ¶230.

The configuration described above was a known technique in the prior art. EX1003, ¶231. For instance, U.S. Patent No. 9,651,658 ("Pennecot") teaches a transmit block 220 with emitters mounted on one circuit board, and a receive block 230 with detectors mounted on another circuit board, with both boards mounted parallel to the axis of rotation:

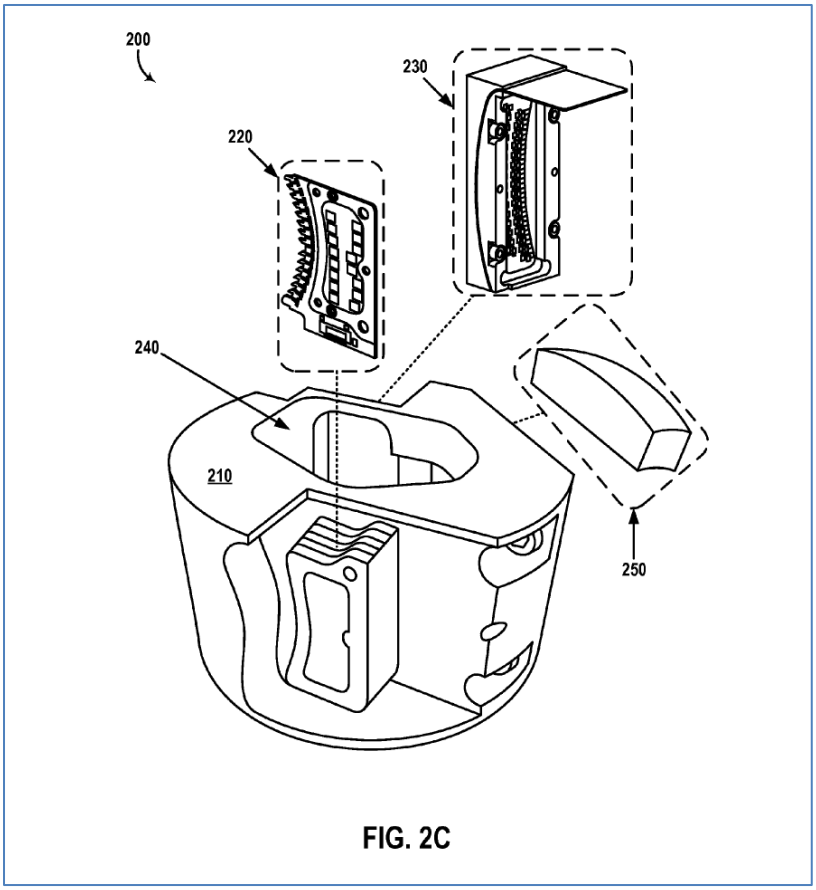

FIG. 2C

EX1014, Fig. 2C, 4:25-5:25, 8:14-28; *see also* Section XI.B.

7. Claims 7/16

Section IX.E.1(i).

8. Claims 8/19

Pacala discloses that the limitations recited in these claims are a basic function of a light ranging device: "A lidar sensor … can measure the distance to a target or objects in a landscape, by … measuring the time it takes photons to travel to said target or landscape and return after reflection to a receiver." EX1004, [0004]; *see also* EX1015, 1:14-22; EX1003, ¶¶234-237, 45-48. Such measurements may be "conventional[ly]" performed by circuitry. EX1004, [0005].

9. Claim 9

Johnson discloses circuitry 250 (a stator driver circuit) that can achieve a desired rotation speed for the rotor assembly (EX1005, 18:33-36), and Pardhan confirms that the speed can include "15 Hz" (EX1006, 10:32-41); EX1003, ¶¶238-239.

10. Claim 11

Johnson discloses that the stator elements in the plurality of stator elements is a multiple of three. EX1003, ¶241. For example, Figure 4 of Johnson shows "leads (*i.e.*, contacts 432, 434, 436)" that correspond to "contacts 332, 334, 336" in Figure 3C:

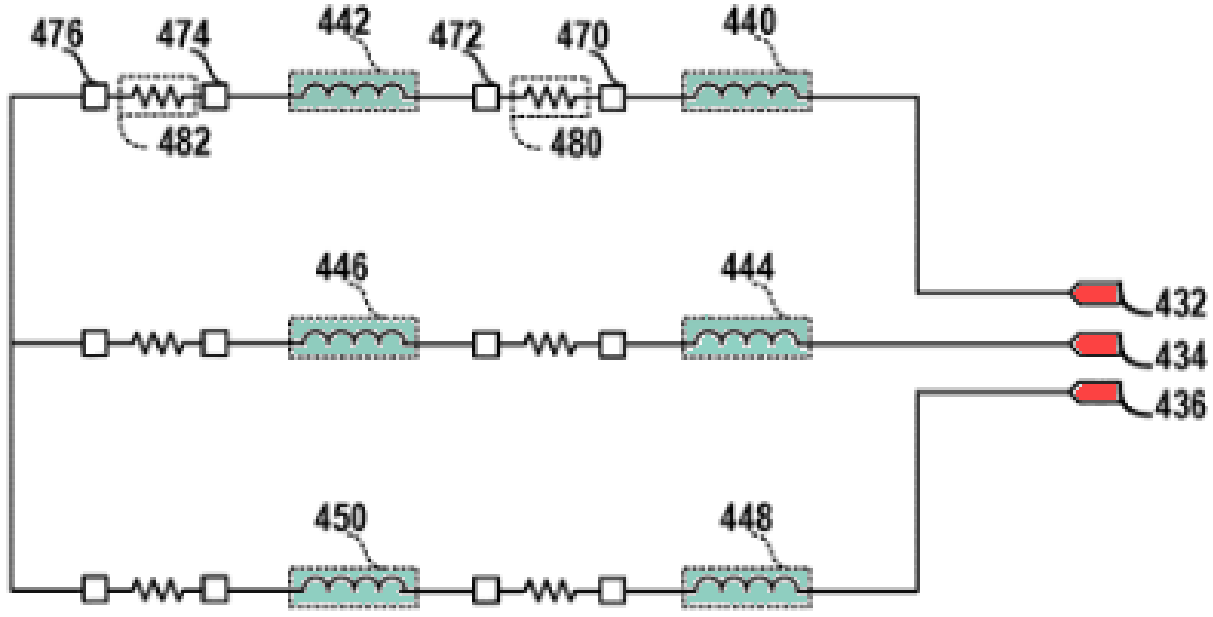

Id., 15:64-16:8, 17:1-9, Fig. 4. "[C]oil windings 440, 442, 444, 446, 448, 450" (green) are configured in "a parallel circuit configuration relative to the power leads," thereby forming three stator elements that each comprise two coils.

Johnson also discloses a stator driver circuit (150/250) that provides "a modulated power signal, such as 3-phase alternating current (AC) signal for instance, that flows through coil windings." *Id.*, 6:29-48, 9:32-48, 12:37-44, 15:64-16:8, Figs. 1-2; EX1003, ¶242.

11. Claim 17

The Pacala-Johnson-Pardhan-Zhang combination renders obvious claim 17. EX1003, ¶¶243-247

Johnson illustrates a wireless power transformer (power interface 218/238) integrated onto the stator and rotor platforms that can provide "wireless (or wired) transmission of power between" the platforms:

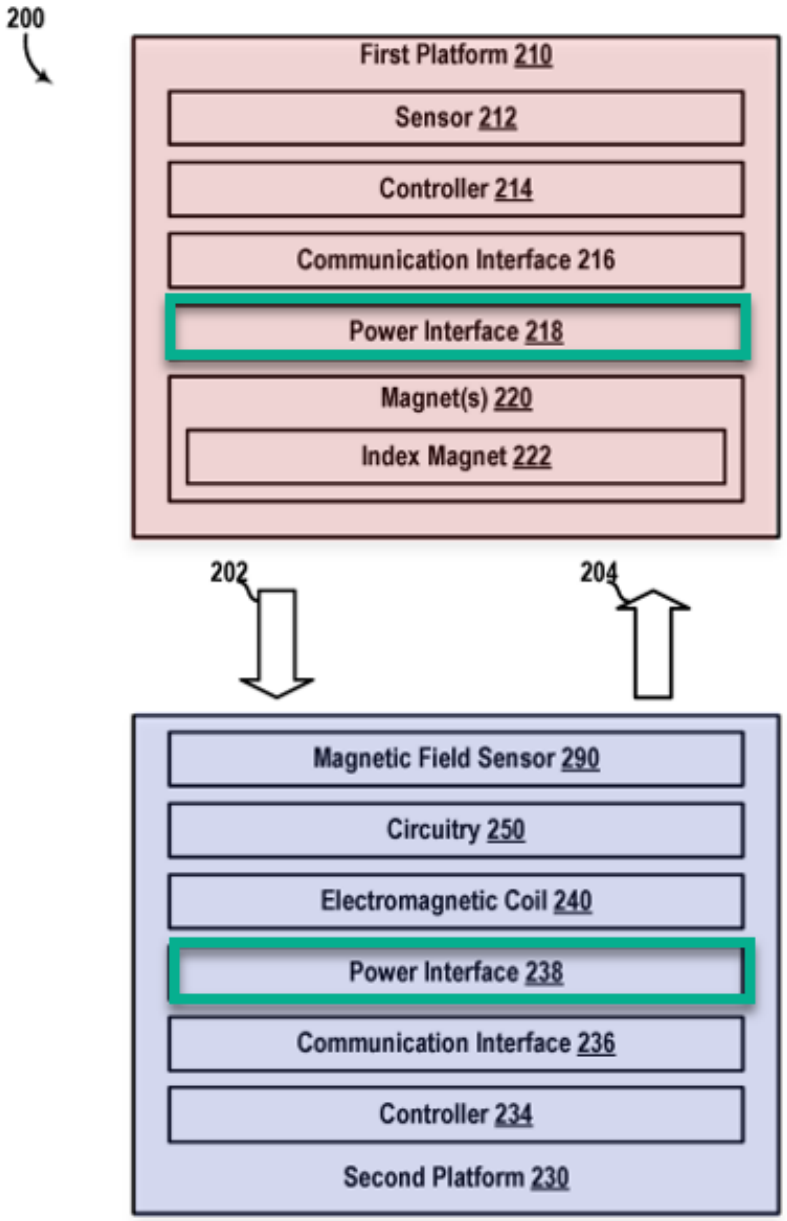

FIG. 2

EX1005, Fig. 2, 7:64-8:15, 9:19-31, 11:51-60.

A first annular transformer coil is mounted on the rotor circuit board around the region 310b:

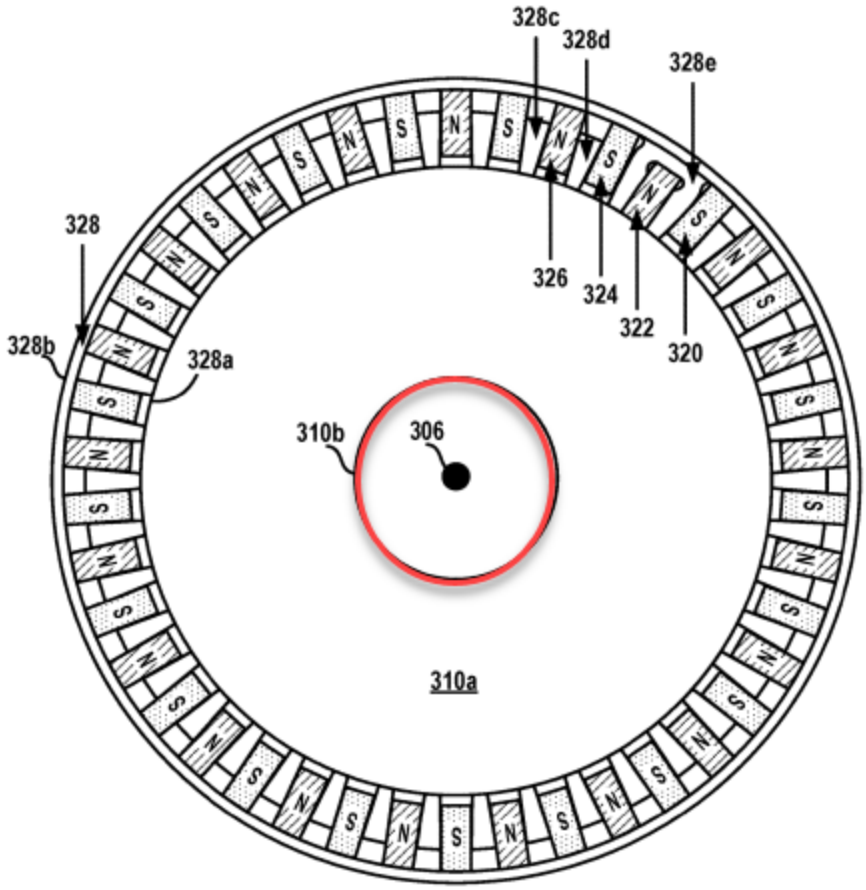

Id, Fig. 3B, 11:51-60. Stator "platform 330" includes "a similar transformer coil" on the stator circuit board of Figure 3C. *Id.*; *see also id*., 8:4-9, 9:22-31.

The transformer coils are also in an opposing relationship with one another: "transformer coils can be arranged around a center region of platform 210 opposite to corresponding transformer coils included in platform 230." *Id.*, 8:4-8, 11:62-67, 11:66-12:16, Fig. 3A-C; *see also id*., 7:15-18.

Although Figures 3B-3C illustrate the transformer coils on the inside of the stator and rotor elements, Johnson teaches that "[o]ther configurations are possible." *Id*., 8:14-15. Positioning transformer coils outside of the stator and rotor elements

is one of a limited number of obvious design choices. EX1003, ¶247. The region in the center of a circuit board has limited space, so it is logical and common to place transformer coils on the outside of the rotor/stator elements. *Id.* Additional reasons to combine are discussed in Sections IX.B.12.

12. Motivation to Combine

A POSITA would have been motivated to combine the teachings of the prior art references in the manner discussed above and would have had a reasonable expectation in doing so. EX1003, ¶¶248-259.

First, Pacala teaches that its LiDAR device rotates on a "spinning turret 60" relative to a "static base 50" (EX1004, [0013]), but it does not disclose the details of the rotation structures. Thus, a POSITA would have looked to references describing the implementation of such structures, including Johnson, Pardhan and Zhang. *See Wavetronix LLC v. Smart Microwave Sensors Gmbh*, 746 Fed. Appx 984, 987, 991 (Fed. Cir. 2018) (affirming motivation finding where base reference "taught a transmitter that generates a signal" but "failed to disclose its details," and secondary reference "discloses the details ."); EX1003, ¶249.

Second, implementing the rotor-stator structure taught by Johnson and Pardhan within the enclosure of Pacala constitutes the use of a well-known technique to improve similar devices in the same way. By the priority date of the '515 Patent, rotor-stator structures were well-known and widely used within the enclosure of a

LiDAR device. EX1003, ¶250 (citing EX1005, EX1006, EX1009, 4:53-64). A POSITA would have been particularly motivated to implement the rotor-stator structure of Johnson-Pardhan that integrates the motor and distributed electronics within the rotor-stator structures because it improves Pacala by providing "a more compact design and/or efficient use of space." *Id*. (citing EX1045, 4:1-6). In addition, Johnson does not expressly disclose the details regarding the shaft and support structure that couples the stator and rotor platforms, but this is ripe for predictable improvement by integrating the known structural elements described in Pardhan (which is also a Waymo patent). *Id*.

Third, implementing the rotor-stator structure taught by Johnson and Pardhan within the enclosure of Pacala would have involved simple substitution of one known element (the rotation structure of Pacala) for another (the rotation structure of Johnson-Pardhan) to obtain predictable results (a LiDAR device configured to rotate on the rotational structure). EX1003, ¶251. The rotational structure taught by Johnson and Pardhan are expressly designed to rotate a LiDAR device like Pacala and serve the same function as Pacala's static base and spinning turret. *Id*.

Fourth, the prior art includes express motivations to further combine the teachings of Pardhan and Zhang regarding a support structure with arms to Johnson. A LiDAR device mounted on a rotating platform "generate[s] excess heat" that makes it difficult to operate the device "within a safe operating temperature range"

without techniques for "transfer[ing] excess heat away from" the rotating LiDAR device. EX1006, 4:54-5:80, 19:2-6. Pardhan and Zhang teach known techniques for addressing thermal issues, and are complementary to Johnson and can be implemented via a support structure on Johnson's rotor. Indeed, Pardhan, like Johnson, teaches a rotor-stator structure, but further adds a support component which includes a rotor plate 720 (with fins) made from a "metallic material with high thermal conductivity" to avoid overheating. EX1006, 18:6-19. Zhang's heat dissipation techniques are also complementary with and can be implemented in addition to those in Pardhan to further improve the thermal design of the combined device. EX1003, ¶252. Thus, a POSITA would have been motivated to combine the teachings of Pardhan and Zhang into Johnson's rotor-stator structure to improve heat dissipation and ventilation and increase operating life. *Id*.

Fifth, a POSITA would have also been motivated to modify Pardhan's support structure to use a bearing housing with arms. *Id*., ¶253. Pardhan employs one exemplary type of bearing housing, but by the time of the '515 Patent, bearing housings were well known and POSITAs understood different designs could be used in a rotor-stator structure interchangeably. *Id*., ¶¶253, 60-62; *Almirall, LLC v. Amneal Pharmaceuticals LLC*, 28 F.4th 265, 272–75 (Fed. Cir. 2022) (affirming finding of motivation to combine where expert explained that alternative designs performed "the same function" and were "interchangeable," and that substitution

"was routine and predictable" because designs were known). A POSITA would have also understood that when mounting a LiDAR device to a rotor platform, it is desirable to minimize vibration, and employing a bearing housing with arms furthers this goal by strengthening the attachment of the shaft to the rotor. EX1031, 329-331 ("Section 6.2.5 Prevention of Bearing Axial Movement"). Employing a bearing housing with arms is thus a simple substitution of one known bearing housing (from Pardhan) for another (bearing housings with arms) and would have resulted in an improved structure that benefits from additional support provided by the arms. EX1003, ¶253.

Sixth, a POSITA would have been motivated to modify Johnson to position the transformer coils on the outside of the stator and rotor elements. EX1003, ¶254. Johnson discloses its configuration is exemplary and others are possible. EX1005, 7:64-8:15. There are only a small number of possible arrangements for the transformer coils relative to the rotor and stator elements (*e.g.*, inside or outside) each of which yields predictable results. EX1003, ¶254. Further, a POSITA would have understood that the relative position of the transformer coils is a straightforward design choice. *Id.*. For instance, the perimeter of the motor magnets and windings depends on the size of the motor, and a LiDAR system with a smaller motor will have less space in the center of the circuit board. *Id.*, ¶255. A LiDAR system may also need larger transformer coils to increase the power transfer distance in some

application, and the transformer coils may be too large for the limited center region space. *Id.*, ¶255. A POSITA would thus have understood that the position of the transformer coils relative to the rotor and stator elements is a simple design choice with no novel or unexpected results. *Id.*

Seventh, a POSITA would have been motivated to combine Pacala, Johnson, Pardhan, and Zhang as described above because the combination merely combines prior art elements according to known methods. EX1003, ¶256. Pacala discloses a LiDAR system with the claimed light ranging device and components. *Id*. Johnson discloses a rotor-stator platform and well-known associated rotor-stator components and electronics. *Id*. Pardhan and Zhang disclose known support structures and shafts specifically used to rotationally couple rotor and stator platforms for LiDAR. *Id*. A POSITA would have understood that these known components could be combined using known engineering and assembly techniques, and the resulting combination would have yielded predictable results, with each element continuing to perform the same function as it does separately. *Id*..

A POSITA also would have had a reasonable expectation of success in combining these references to achieve the claimed invention. EX1003, ¶¶257-259. Light ranging devices and rotor-stator structures for mounting them were widely studied before the priority date, as confirmed by the '515 Patent. *Id.*, ¶258; *see also* EX1001, 1:30-41, 1:42-48. Basic electrical engineering designs and principles can

be applied to predictably integrate a light ranging device with the stator and rotor platforms and their associated support structure and electronics. *Id*., ¶259.

X. GROUND 2: PACALA, JOHNSON, PARDHAN, AND ZHANG IN FURTHER VIEW OF CAI RENDERS OBVIOUS CLAIMS 2, 4-6 AND 17.

A. CN205027903U ("Cai")

Cai (EX1008) is a certified English translation of CN205027903U (EX1048). Cai was filed October 13, 2015 and published February 10, 2016. EX1008. It is thus prior art under 35 U.S.C. §102(a)(1)-(2). Cai is analogous art to the '515 patent. EX1003, ¶111.

Figure 1 illustrates a rotating disk (red) and base (blue) for a LiDAR system:

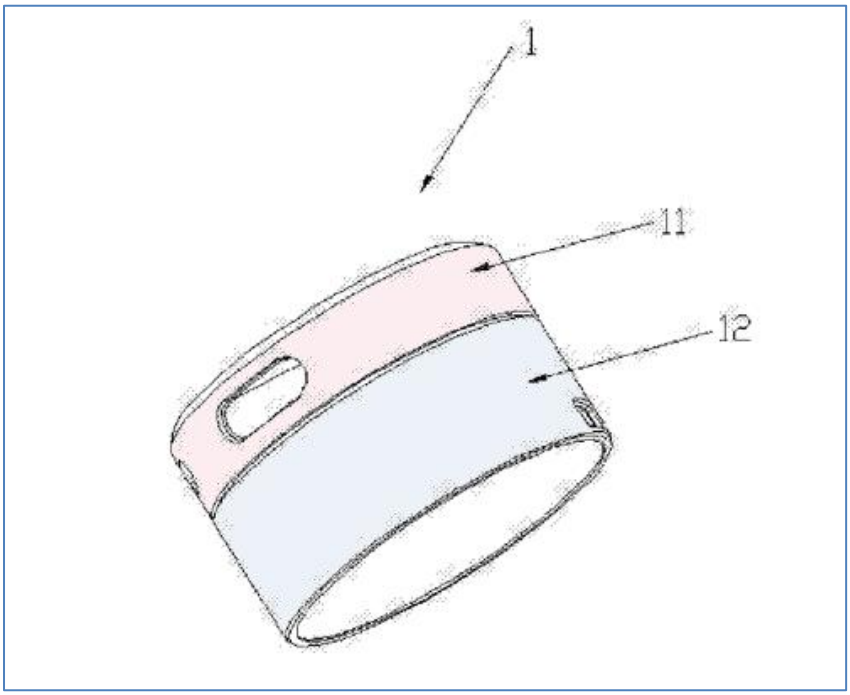

Id., [0025], Fig. 1.

The LiDAR system includes a brushless DC motor (13) and transformer coils (15/16):

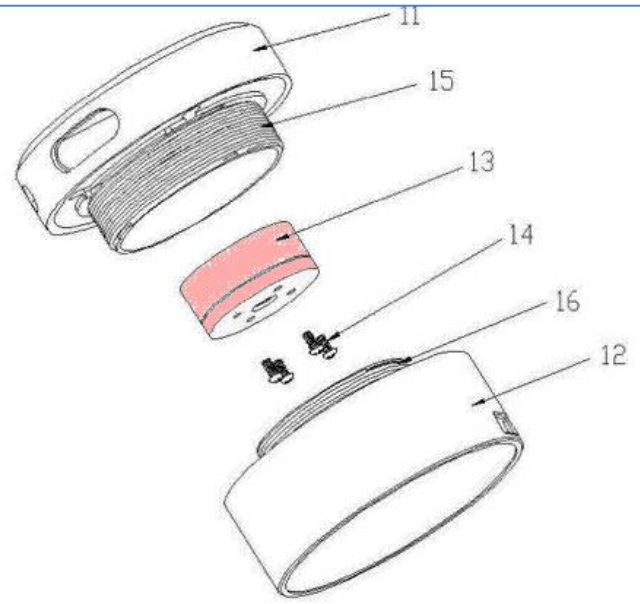

Figure 2

Id., Fig. 2.

The LiDAR system also includes circuit boards (113/124) positioned above and below the motor for mounting signal transceivers (17) that provide a communication channel for exchanging sensor data through a hollow motor shaft:

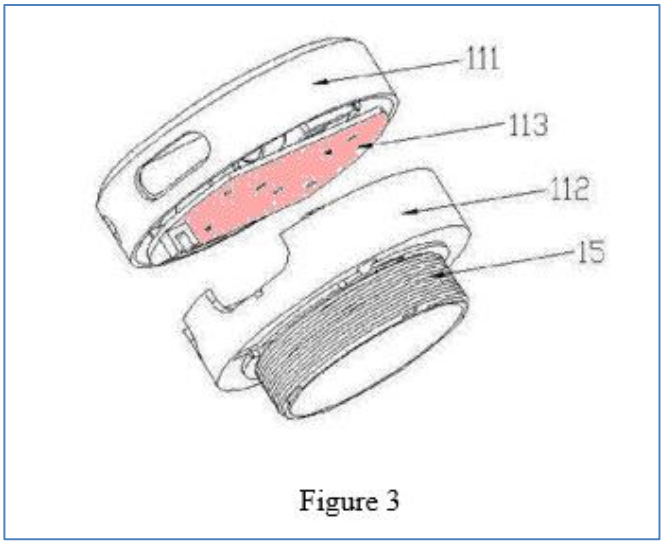

Figure 3

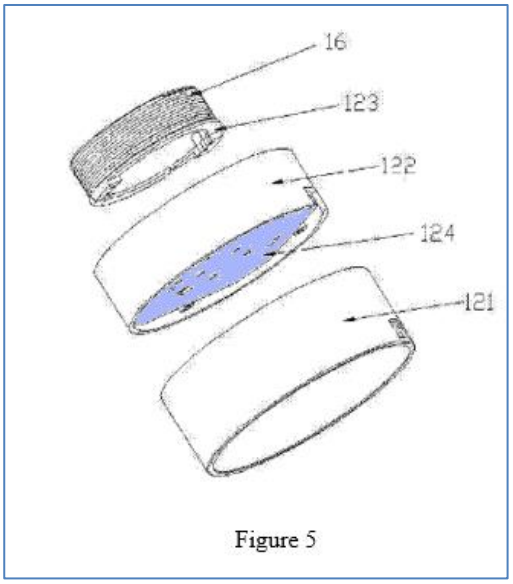

Figure 5

Id., [0026], [0028], Fig. 3, 5; *see also id*., [0027], [0030], Fig. 4.

Figure 8 shows another perspective with signal transceivers (17) mounted on circuit boards (113/124) above and below motor (13) and transformer coils (15/16) positioned on the outside of the motor (13):

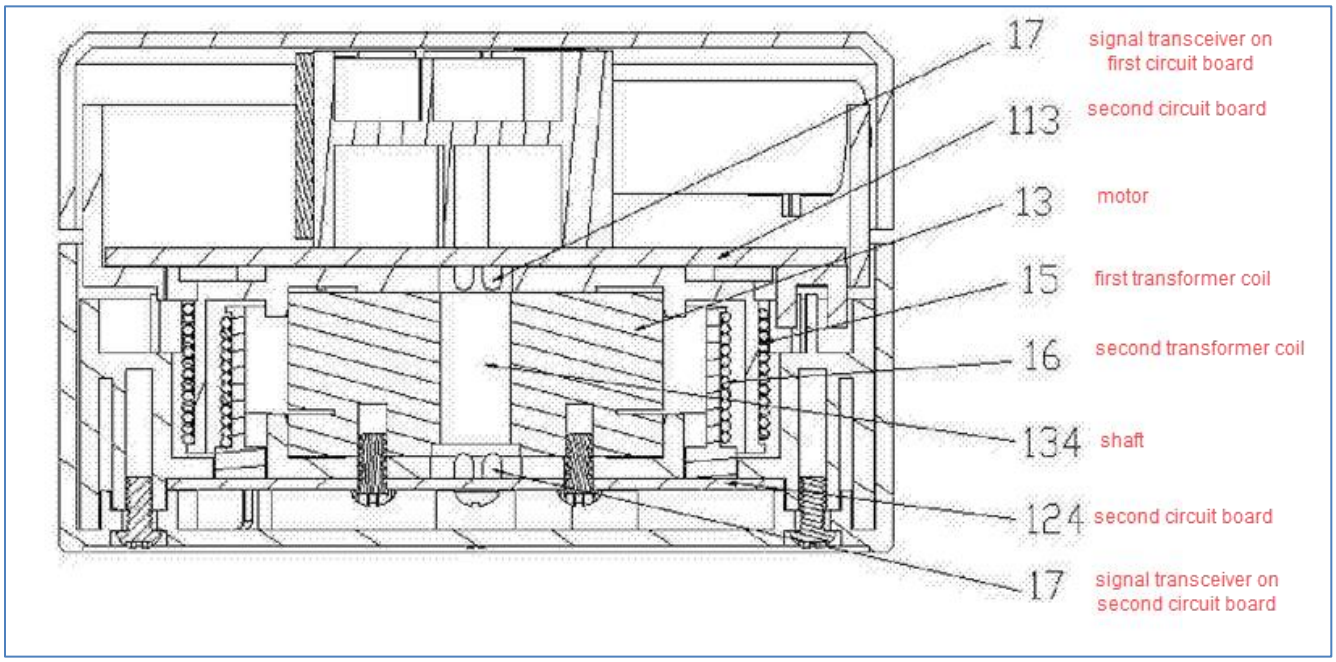

Id., Fig. 8.

B. The Pacala-Johnson-Pardhan-Zhang-Cai Combination

In the proposed Pacala-Johnson-Pardhan-Zhang-Cai combination, Pacala, Johnson, Pardhan, and Zhang are combined as set forth in Ground 1. *See* Section IX.E. The combined system would then be further modified in view of Cai so that transceivers are mounted on additional "third" and "fourth" circuit boards above and below the rotor-stator elements so as to form a wireless communication channel through the hollow shaft. Further, Johnson would be modified so that the transformer coils on the stator-rotor circuit boards would be located on the outside, rather than the inside, of the rotor-stator elements.

A POSITA would have also been motivated to combine the teachings of these references and would have had a reasonable expectation of success for the reasons discussed in the analysis below and in Section X.B.6.

1. Claim 2

Cai discloses the additional limitation of claim 2 directed at a communication channel extending through a hollow shaft. EX1003, ¶¶262-264.

For example, Cai discloses that a rotating disk and fixed base comprise circuit boards 113/124 (respectively) to which signal transceivers 17 are mounted:

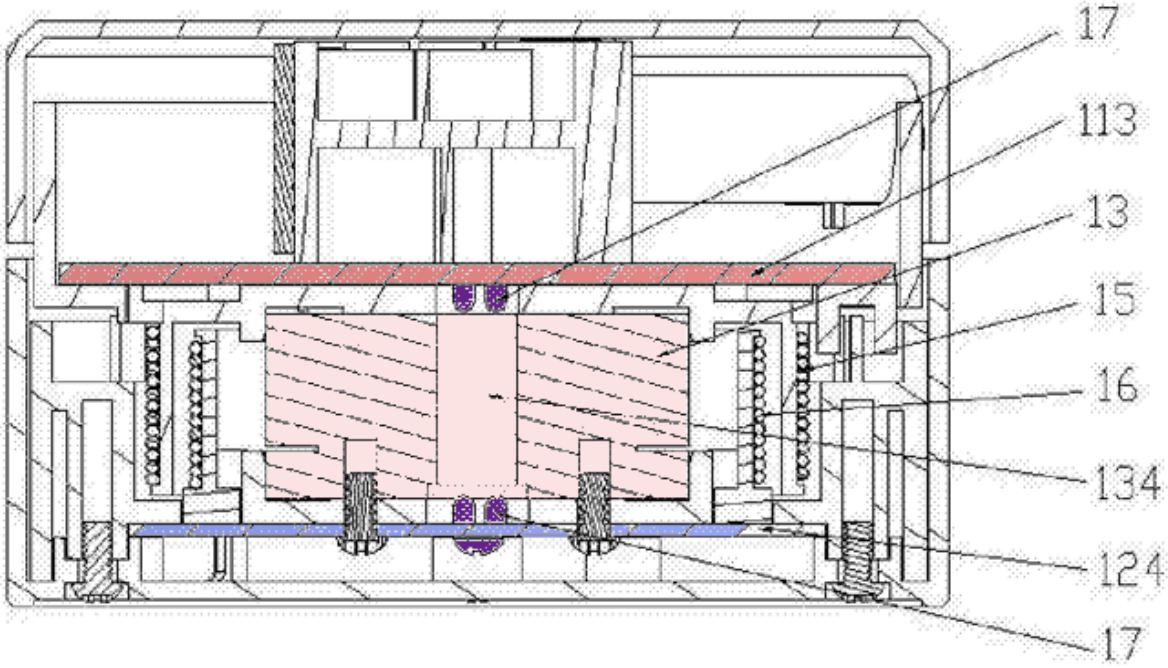

EX1008, [0030], Fig. 8. A communication channel is formed through hole (131) in the center of a motor (13):

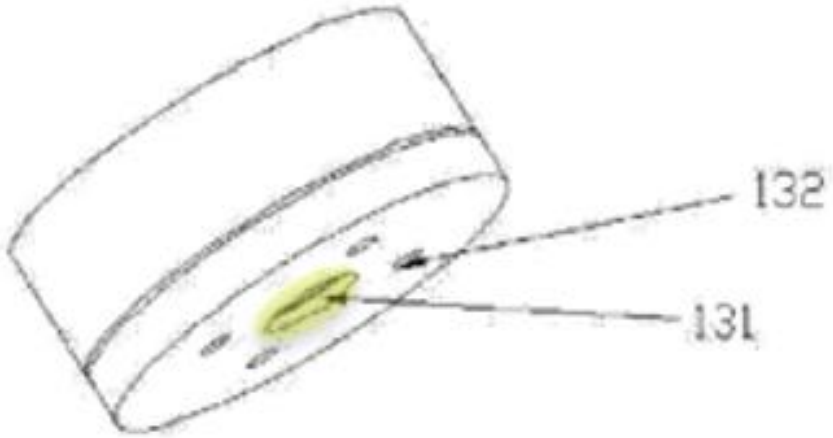

Figure 4

Id., pg. 4, Claim 6, Fig. 4.

A POSITA would have been motivated to apply Cai's teaching to Johnson and Pardhan by mounting the transceivers (17) on the top and bottom side of the Johnson-Pardhan rotor and stator platforms to provide wireless communication means for exchanging sensor data through the hollow shaft that improve the reliability of the signal transmission. EX1008, [0002], [0030]; EX1003, ¶277. Additional reasons to combine are discussed in Section X.B.6; EX1003, ¶279.

2. Claim 4

Johnson discloses a "PCB motor" (EX1005, 13:57-60, 13:7-11), which comprises stator and rotor circuit boards (the claimed "first" and "second" circuit boards). EX1003, ¶266; *see also* Section IX.E.1(d),(g). Cai teaches placing additional circuit boards (113/124) above and below the motor for mounting transceivers (17). *See* Section X.A. These transceiver boards (red and blue) are the claimed "third circuit board" and "fourth circuit board":

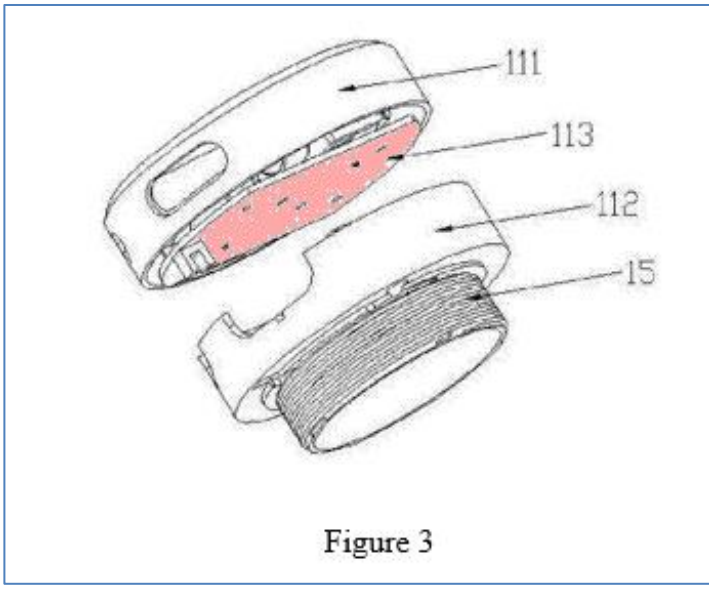

Figure 3

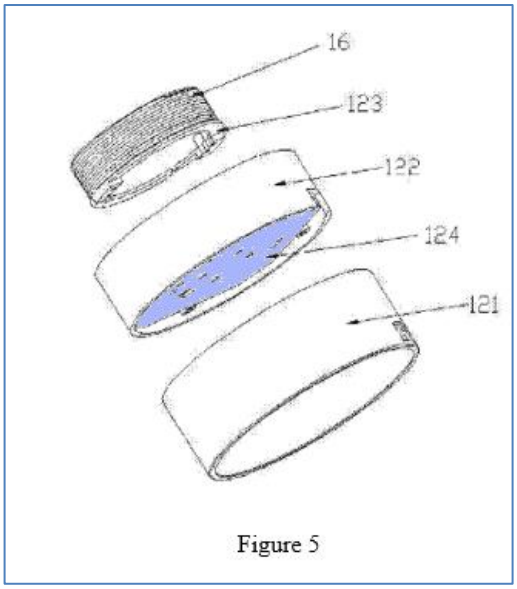

Figure 5

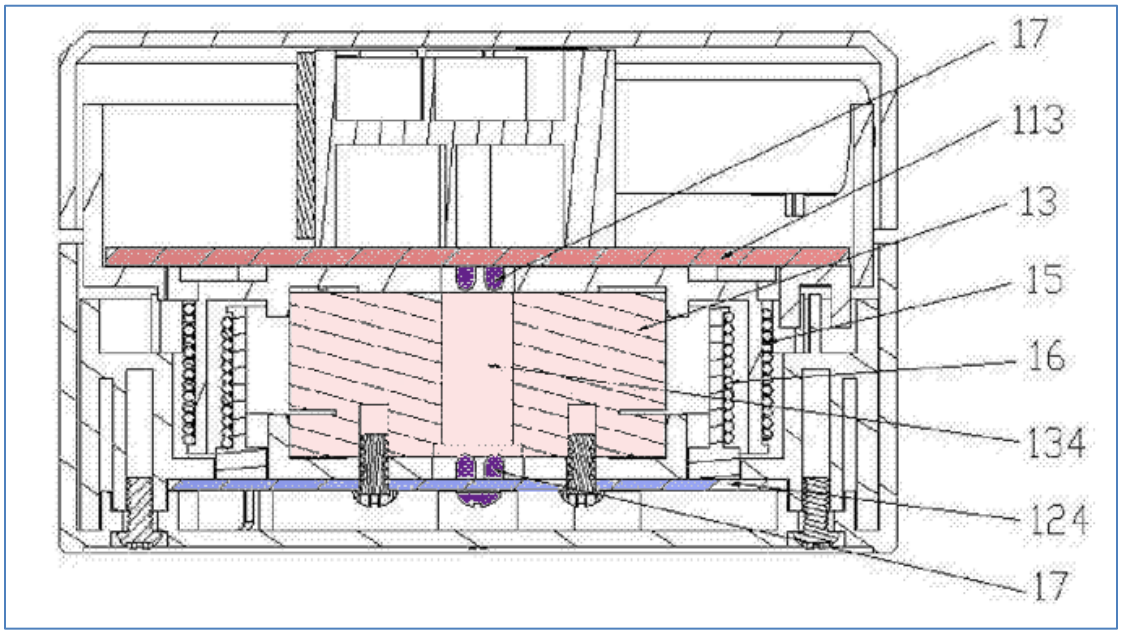

EX1008, [0025], Figs. 3, 5, 8; EX1003, ¶¶267-268.

When applying the teachings of Cai to Johnson and Pardhan, Cai's "circuit board 124" would be fixedly coupled to the base and positioned below the stator circuit board that is part of the motor. EX1003, ¶269. Similarly, Cai's "circuit board (113)" would be positioned atop the motor (and on top of Johnson's rotor platform),

such that it is between the enclosure top and the rotor circuit board and arranged in a plane parallel with the first plane (defined by the stator circuit board). *Id.*

3. Claim 5

Section IX.E.5.

4. Claim 6

Section IX.E.6.

5. Claim 17

Johnson discloses nearly all of Claim 17, but does not expressly teach that the annular transformer coils are on the inside permitter of the rotor-stator elements. *See* Section IX.E.11. Cai, however, illustrates a rotary disk (red) and a base (blue) of the motor where first and second transformer coils are positioned on the outer permitter of the brushless motor (13) and its rotor-stator elements:

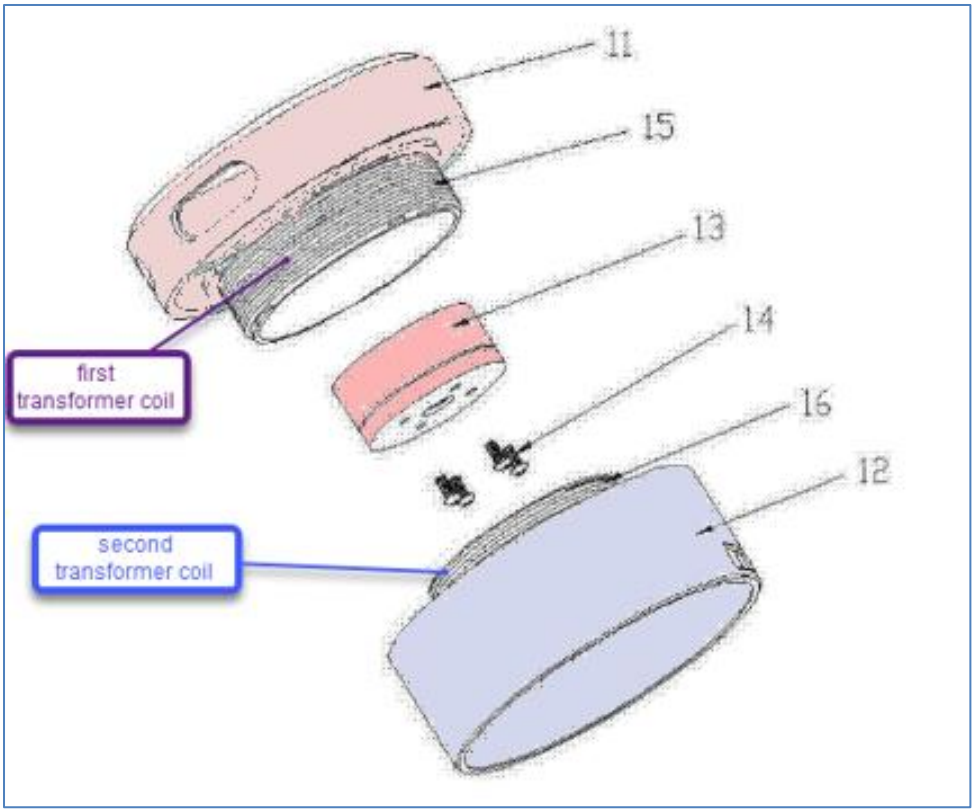

EX1008, [0025], Fig. 2.

Figure 8 also shows the coils (purple and blue) are outside the motor (red):

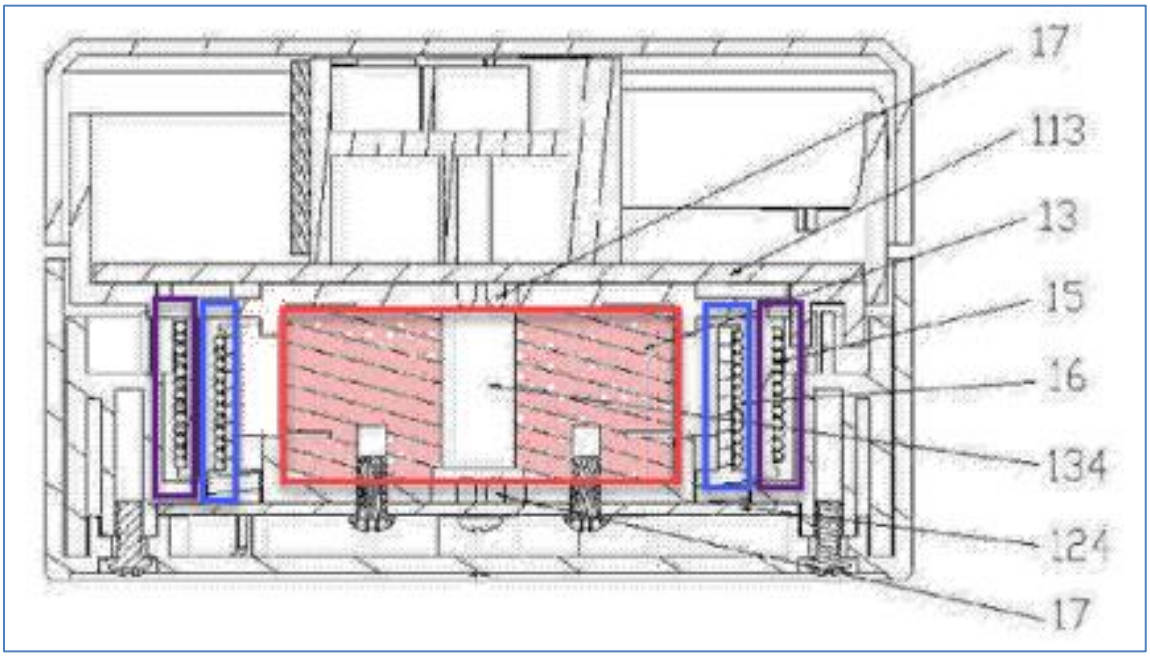

EX1008, [0030], Fig. 8.

A POSITA would have understood that Johnson's stator and rotor elements are housed in the motor, such that the transformer coils in Cai, when applied to Johnson, would have been concentric with and positioned outside an outer perimeter of the stator elements and rotor assembly. EX1003, ¶¶272-275.

6. Motivation to Combine

A POSITA would have been motivated to combine Pacala-Johnson-Pardhan-Zhang for the reasons discussed in Section IX.E.12. A POSITA would also be motivated to further combine Cai in the manner discussed above. EX1003, ¶¶276-281.

First, the prior art provides an express motivation to implement Cai's transceiver circuit boards above and below Johnson's stator and rotor circuit boards. EX1003, ¶277. Cai teaches that by mounting signal transceivers at the center of circuit boards positioned above and below the motor's rotor-stator circuit boards, the position of the transceivers is "guaranteed to be relatively unchanged" when the rotor rotates, "thereby providing reliable signal transmission" through a hollow shaft. EX1008, [0002], [0030].

Further, implementing the claimed third and fourth circuit boards as taught by Cai is a straightforward design choice. For instance, a POSITA would have understood that all of the system electronics may not fit on the rotor and stator circuit

boards and that the space in the center of the board is limited. Thus, a POSITA would be motivated to mount the transceivers on additional circuit boards. EX1003, ¶¶278-279.

Second, the prior art also includes express motivation to implement the transformer coils on the outside of the rotor-stator elements, as taught in Cai. Johnson does not preclude such a design and acknowledges that "[o]ther configurations are possible." EX1005, 8:14-15. Cai discloses one of a limited number of known alternative configurations (transformer coils positioned outside, rather than inside). Further, a POSITA would have recognized that transformer coils may not fit within the center region of the circuit boards, such that they would need to be placed on the outside of the stator elements and rotor assembly in certain designs. *See* EX1003, ¶278-279; Section IX.E.12.

A POSITA also would have had a reasonable expectation of success in combining these references using basic engineering principles. *Id*., ¶281-282.

XI. GROUND 3: PACALA, JOHNSON, PARDHAN, ZHANG, AND CAI IN FURTHER VIEW OF HALL RENDERS OBVIOUS CLAIMS 5-6

A. U.S. Patent No. 11,723,762 ("Hall")

Hall was filed on January 31, 2017. Ex1009. It therefore qualifies as prior art under 35 U.S.C. § 102(a)(2).

Hall's LiDAR system includes "an array of multiple laser emitters and detectors" and may be used for "autonomous vehicle application[s]." *Id.*, 1:64-2:14. An embodiment is shown in Figure 3, which has a similar overall structure to Pacala:

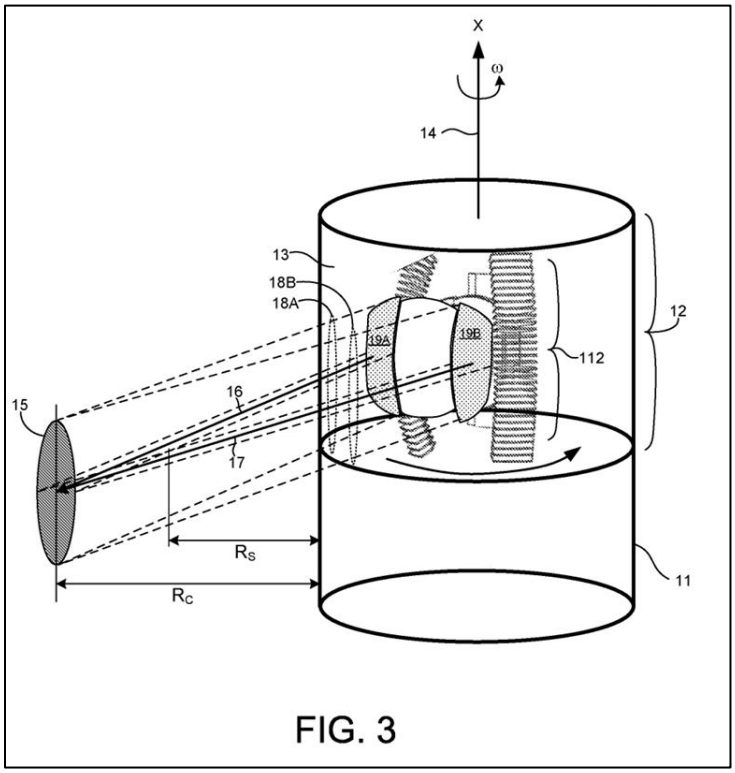

Id., Fig. 3.

The LiDAR system 10 includes a lower housing 11 and an upper housing 12, with a transparent cylindrical shell element 13. *Id.*, 5:52-60. The system includes a "light emission/collection engine 112" that is connected to a "rotating electronics board 111" to rotate about a central axis. *Id.*, 4:45-64. The light emission/collection engine includes "an array of light emitting elements 114 and an array of light detecting elements 113." *Id.*, 4:65-67. Light from the emitters "passes through a series of illumination optics 115 that collimate the emitted light" and emit the light

into the environment. *Id.*, 5:2-5. The light is then "reflected from objects in the environment" and "collected by collection optics 116 … where it is focused onto each detecting element of the array of detecting elements 113." *Id.*, 5:8-14.

Hall is analogous art to the '515 patent. EX1003, ¶115.

B. The Pacala-Johnson-Pardhan-Zhang-Cai-Hall Combination

In the proposed Pacala-Johnson-Pardhan-Zhang-Cai-Hall combination, Pacala, Johnson, Pardhan, Zhang, and Cai are combined as set forth in Ground 2. *See* Sections IX.E and X.B. Hall further confirms that the arrangement of transmit and receive modules recited in claims 5-6 was obvious. EX1003, ¶¶283-291. Thus, Pacala-Johnson-Pardhan-Zhang-Cai-Hall renders obvious claims 5-6.

A POSITA would have also been motivated to combine the teachings of these references and would have had a reasonable expectation of success for the reasons discussed in the analysis below and in Section XI.B.3.

1. Claim 5

As discussed above, the combination of Pacala-Johnson-Pardhan-Zhang-Cai discloses that the light ranging device is mounted within a ranging device housing disposed within the enclosure between the fourth circuit board and the enclosure top:

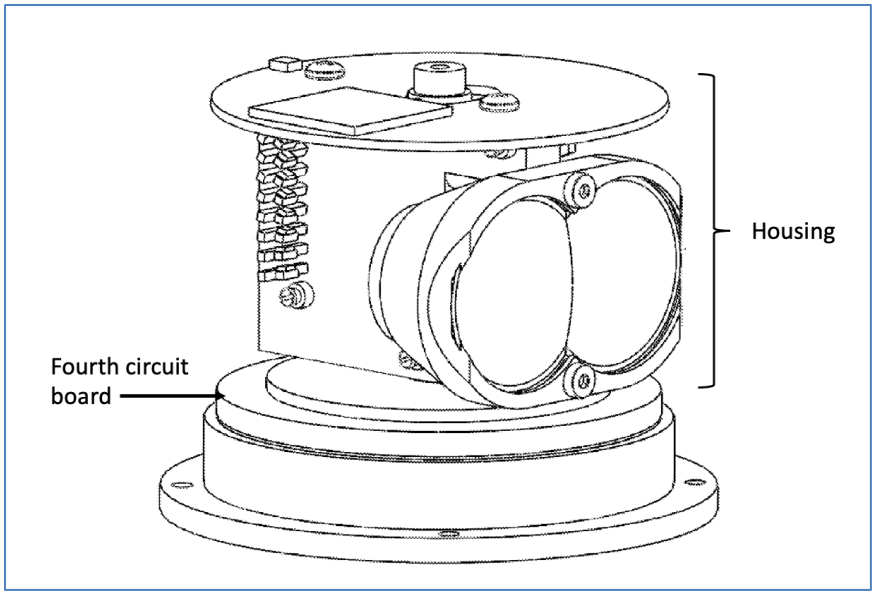

EX1004, Fig. 2; *see also* Section IX.E.5.

Further, as discussed above, Pacala discloses and renders obvious mounting the transmit module to a first portion of the housing and the receive module to a second portion of the housing. *See* Section IX.E.5. To the extent Ouster argues otherwise, Hall provides additional details that confirm the obviousness of this limitation. EX1003, ¶¶285-289.

Hall teaches that the LiDAR sensor includes a transmit module that is physically separate from the receive module. For instance, Hall discloses a light emission/collection engine that includes "an array of light emitting elements 114" and "a series of illumination optics 115" (bulk transmitter optic) that "collimate the emitted light into an array of beams" which are emitted from the 3-D LiDAR system into an external field. *Id.*, 4:65-5:5. It also discloses a physically separate collection/detection elements with "collection optics 116" (bulk receiver optic), that

collect light reflected from objects in the environment and focus it onto an "array of detecting elements 113." *Id.*, 5:8-14. The bulk transmitter (blue) and receiver (orange) optics are shown below:

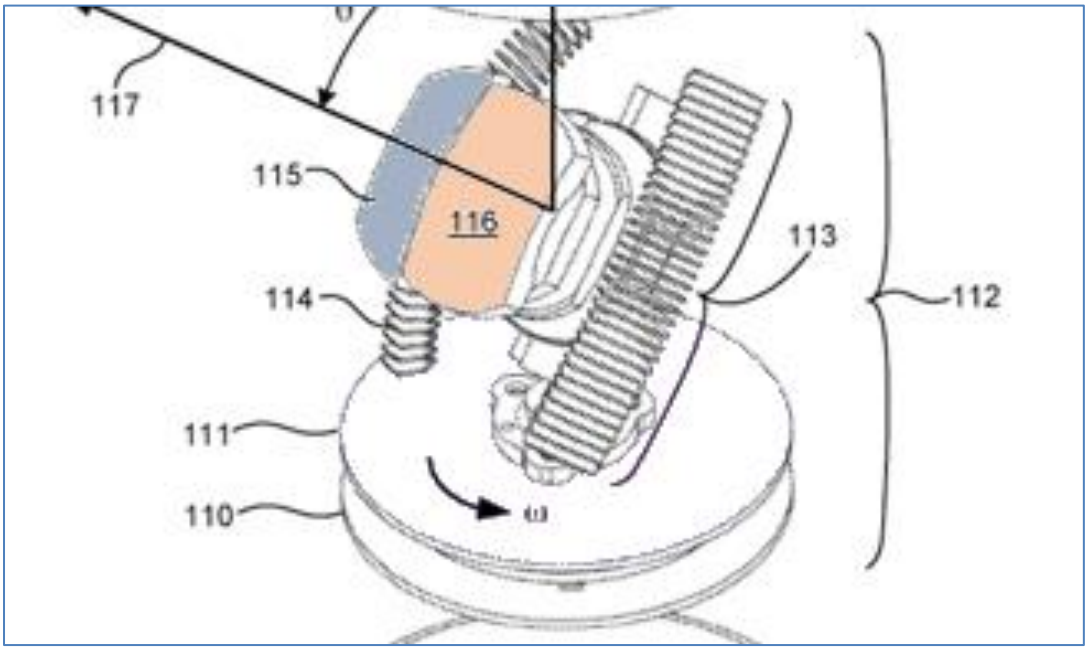

Id., Fig. 2; *see also id.*, Fig. 4. In the combined Pacala-Hall system, the transmit and receive modules would be mounted within Pacala's LiDAR housing, with the housing continuing to be positioned on the surface of the rotational structure. EX1003, ¶288. By the priority date of the '515 Patent, enclosing the transmit and receive modules within a housing was a known technique (*see, e.g.,* EX1004, Fig. 2) and a POSITA would have understood that doing so is desirable because it protects these components from damage (EX1006, 11:47-58). Further, Hall already teaches that the transmit and receive modules should be mounted on the surface of the rotational structure and provides one type of mount (gray) for doing so:

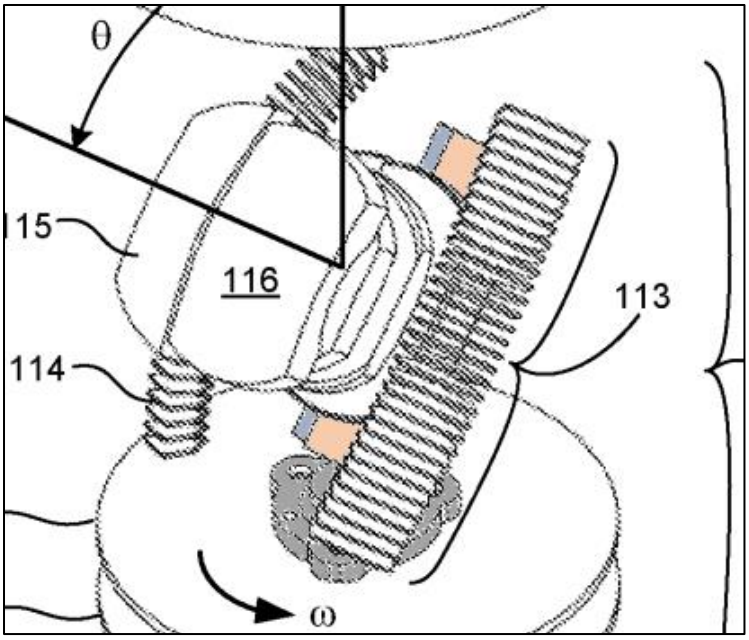

EX1009, Fig. 2; *see also id*., Fig. 3. Thus, mounting the transmit and receive modules to the rotational structure within Pacala's LiDAR housing would amount to simple substitution of one known element (Hall's existing mount) for another (Pacala's LiDAR housing mount) to obtain predictable results (transmit and receive modules mounted within the LiDAR housing). EX1003, ¶289.

2. Claim 6

Hall expressly discloses that the illumination and detector circuitry of the transmit and received modules may be mounted on circuit boards. EX1003, ¶291. For instance, Hall teaches that the "light detecting elements 113" are mounted on circuit board 121, while the "light emitting elements 114" are mounted on circuit board 123, as shown below:

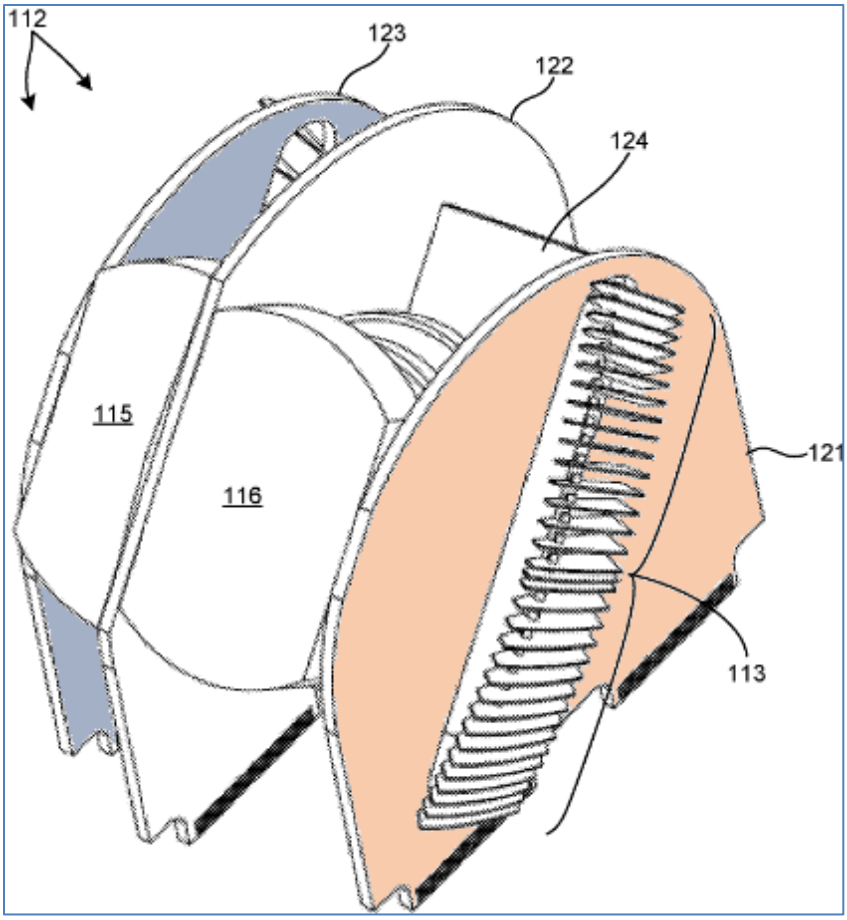

Id., Fig. 4, 7:3-24. Hall also discloses that the lower ends of circuit boards 121-123 is positioned on the rotating electronics board, such that the circuit boards extend vertically upwards along the axis of rotation 306. *Id.*, 7:11-16. Thus, in the combined system circuit boards 121 and 123 are each mounted to portions of Pacala's LiDAR device housing, and constitute the claimed "fifth" and "sixth" circuit boards that are aligned parallel to the axis of rotation. EX1003, ¶291.

3. Motivation to Combine

A POSITA would have been motivated to combine Pacala-Johnson-Pardhan-Zhang-Cai for the reasons discussed in Sections IX.E.12 and X.B.6. A POSITA

would be motivated to further combine Hall in the manner discussed above. EX1003, ¶¶292-296.

First, while a POSITA would have understood the transmit and receive modules of Pacala would comprise circuit boards mounted to portions of the LiDAR housing (*see* Section IX.E.5), Hall could be referenced to confirm the obviousness this arrangement. *See Wavetronix*, 746 Fed. Appx 984 at 991. Further, by the priority date of the '515 Patent a LiDAR housing was a known and conventional component (*see, e.g.*, EX1004, Fig. 2) and a POSITA would have understood that the housing is desirable because it protects the transmit and receive components from damage (EX1006, 11:47-58) and allows them to be easily mounted to the rotational structure. EX1003, ¶293.

Second, mounting the transmit and receive modules to the rotational structure within Pacala's LiDAR housing would amount to simple substitution of one known element for another to obtain predictable results. EX1003, ¶294. Hall already teaches that the transmit and receive modules should be mounted on the surface of the rotational structure and provides one type of mount (gray) for doing so:

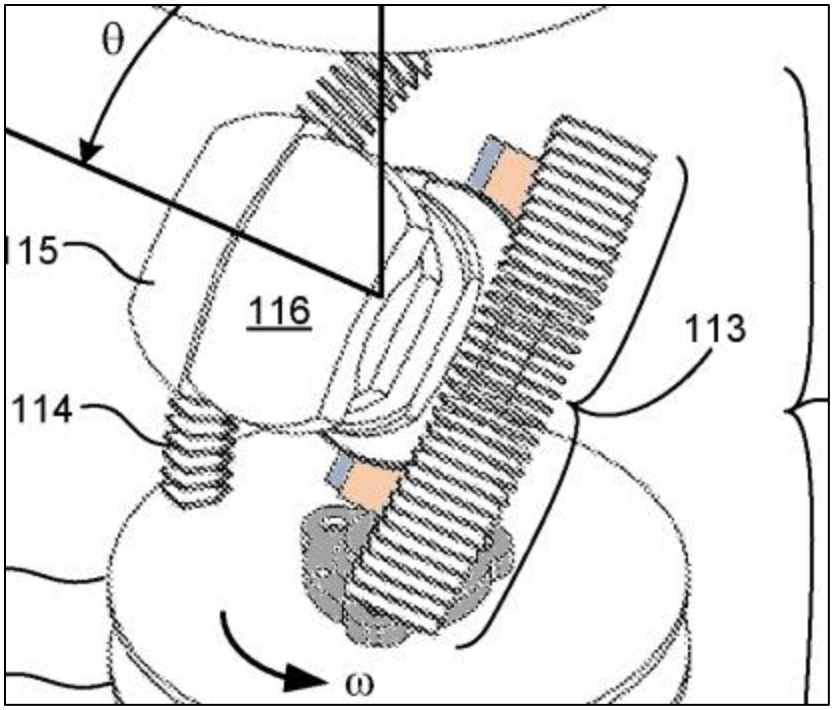

EX1009, Fig. 2; *see also id.*, Fig. 3. And Pacala discloses that the LiDAR components may be enclosed within a housing when mounted on the rotational structure. Thus, a POSITA would have found it to be a matter of simple substitution to employ Pacala's LiDAR housing, rather than Hall's mount, when mounting the transmit and receive modules to the rotational structure. EX1003, ¶294. A POSITA would have also had a reasonable expectation of success. EX1003, ¶296.

XII. GROUND 4: PACALA, JOHNSON, PARDHAN, AND ZHANG IN FURTHER VIEW OF SPECTOR RENDERS OBVIOUS CLAIMS 12 AND 20.

A. U.S. Patent No. 10,473,766 ("Spector")

Spector was filed June 27, 2017 and is thus prior art under 35 U.S.C. §102(a)(2). EX1010. Spector is analogous art to the '515 patent. EX1003, ¶119.

Spector teaches a LiDAR system where the "receiver optics" include "an array of optical detection sites" comprising a "pixelated optical sensor array 20" and "an aperture array 18 for defining the optical detection sites on the sensor array":

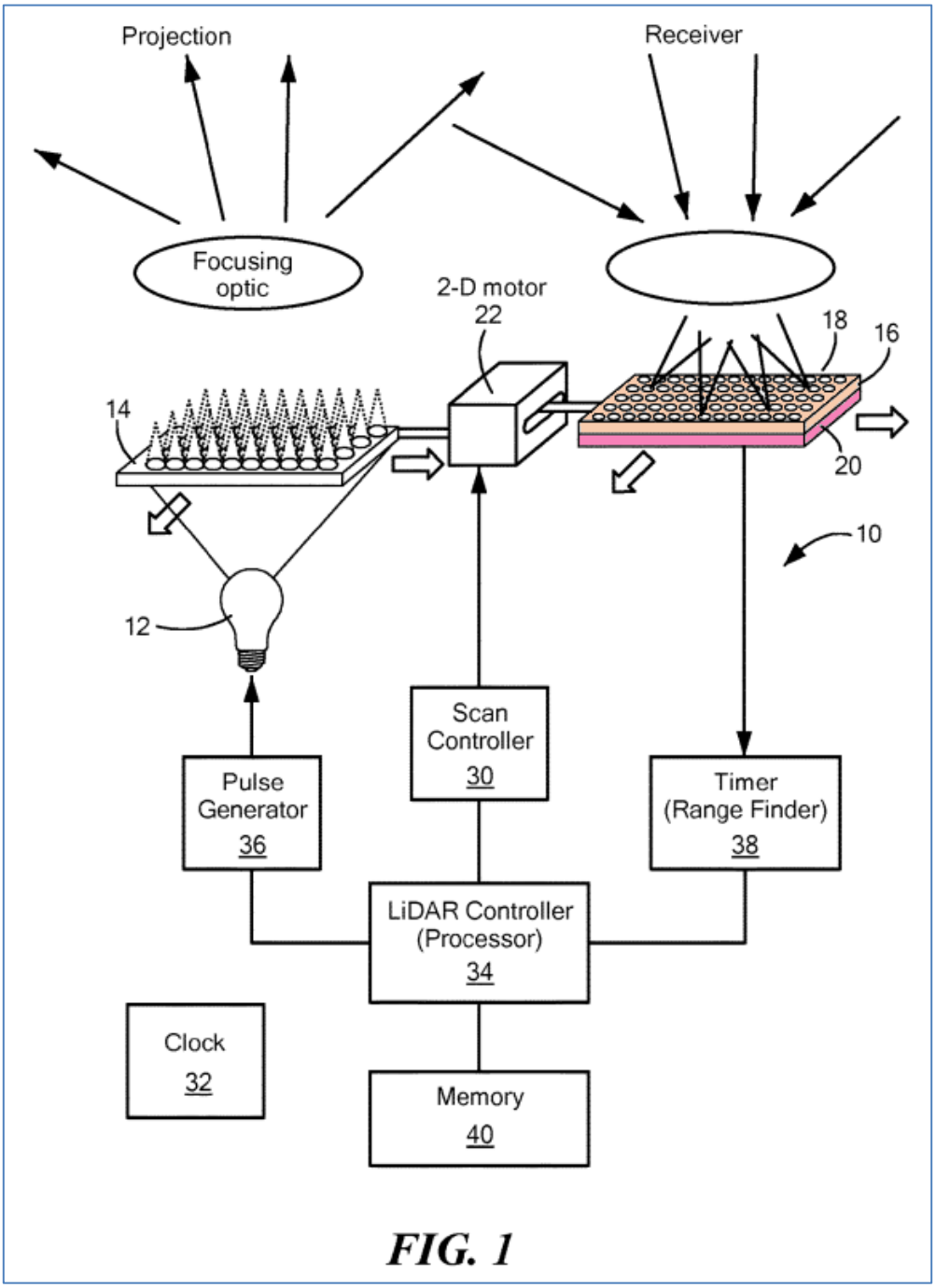

Id., 3:32-45, Fig. 1.

Each aperture "limits visibility by each optical detection site to a single corresponding light spot" from a plurality of light spots generated by a corresponding light transmission module. *Id.*, 3:59-61. As a result, the "array of light spots" generated by the light transmission module "is received in one-to-one correspondence to the array of optical detection sites." *Id.*, 5:33-35.

B. The Pacala-Johnson-Pardhan-Zhang-Spector Combination

In the proposed Pacala-Johnson-Pardhan-Zhang combination, Pacala, Johnson, Pardhan, and Zhang are combined as set forth in Ground 1. *See* Section IX.E. The combined system would then be further modified in view of Spector so that the fields-of-view of different emitters and receivers of Pacala's LiDAR device are "non-overlapping" and so that each emitter's beam is "coincident with" a pixel.

A POSITA would have also been motivated to combine the teachings of these references and would have had a reasonable expectation of success for the reasons discussed in the analysis below and in Section XII.B.2.

1. Claims 12/20

Pacala teaches a LiDAR system with optical transmitters and optical receivers, but does not expressly disclose that the fields-of-view of different emitters and receivers are "non-overlapping," or that each emitter's beam is "coincident with" a pixel, as recited in claims 12 and 20. EX1003, ¶300. Spector discloses these additional limitations. *Id.*, ¶¶301-303.

Spector teaches emitters that project a two-dimensional array of light spots on a scene where each light spot is "isolated" from (*i.e.*, non-overlapping with) others. EX1010, 3:1-3, 6:12-15. Spector also teaches an aperture array at the receiver optics that "limits visibility by each optical detection site to a single corresponding light spot" (*id.*, 3:59-61) such that each receiver channel (*i.e.*, an aperture and its corresponding optical detection site) has a "one-to-one correspondence" with a light spot generated by the emitter channels. EX1010, 3:34-37; 3:59-61, 5:33-35, 6:12-15. Each light spot and corresponding optical detection site thus have coincident fields-of-view. EX1003, ¶302.

2. Motivation to Combine

A POSITA would have been motivated to combine Pacala-Johnson-Pardhan-Zhang for the reasons discussed in Section IX.E.12. A POSITA would be motivated to further combine Spector in the manner discussed above. EX1003, ¶¶304-309.

First, a POSITA would have understood that the teachings of Spector are directly applicable to Pacala's LiDAR device. *Id.*, ¶305. Spector teaches the addition of aperture layers at the transmit and receive optics of a LiDAR device to reduce crosstalk and multipath signals. *Id.*, 6:12-15. A POSITA would have been motivated to apply such techniques to improve the performance of Pacala's LiDAR device by mitigating known problems associated with signal noise and interference. EX1003, ¶305.

Second, the prior art teaches an express motivation to apply the improvements of Spector to Pacala's LiDAR device. *Id*, ¶306. Pacala teaches the need to improve LiDAR performance without making it more susceptible to noise. EX1004, [0003], [0007]. Spector teaches techniques specifically intended to reduce noise, *i.e.*, using aperture arrays to reduce crosstalk and multipath signals. *See* EX1010, 6:12-15. Thus, a POSITA would have applied Spector's aperture arrays to Pacala's LiDAR device to increase sensitivity while maintaining accuracy and reliability. EX1003, ¶306.

A POSITA also would have had a reasonable expectation of success in combining the teachings of the prior art in the manner discussed above. EX1003, ¶¶307-309.

XIII. GROUND 5: PACALA, JOHNSON, PARDHAN, ZHANG, AND SPECTOR IN FURTHER VIEW OF DROZ RENDERS OBVIOUS CLAIMS 13 AND 21.

A. U.S. Patent No. 10,605,984 ("Droz")

Droz was filed December 1, 2016 and published June 7, 2018, and is thus prior art under 35 U.S.C. §102(a)(1)-(2). EX1011. Droz is assigned to Waymo and shares a common inventor with Pardhan. *Id*. Droz is analogous art to the '515 patent. EX1003, ¶122.

Droz teaches an array of light detectors that can be configured for increased sensitivity to low intensities of light, "thereby enhancing their detection qualities."

Id., 1:10-23. The array of light detectors may be part of a sensing component of a LiDAR device. *Id.*, 3:2-7. For example, an "array of SPADs can be connected in parallel to one another, which may allow combining the signals from the connected SPADs to improve the sensitivity of the system." *Id.*, 3:63-67.

B. The Pacala-Johnson-Pardhan-Zhang-Spector-Droz Combination

In the proposed Pacala-Johnson-Pardhan-Zhang-Spector combination, Pacala, Johnson, Pardhan, Zhang, and Spector are combined as set forth in Ground 4. *See* Section IX.E. The combined system would then be further modified in view of Droz so that the LiDAR device would comprise light detector arrays that each comprise a plurality of single photon avalanche diodes (SPADs).

A POSITA would have also been motivated to combine the teachings of these references and would have had a reasonable expectation of success for the reasons discussed in the analysis below and in Section XIII.B.2.

1. Claims 13/21

Pacala discloses that pixels in its LiDAR device may comprise SPAD arrays (EX1004, [0014]), but does not expressly disclose that each pixel comprises a plurality of SPADs, as recited in claims 13 and 21. Droz teaches this additional limitation. For example, Droz discloses a LiDAR device with a plurality of light detector arrays, such as light detector arrays 310, 316, and 318. EX1006, 13:1-3. The output from each light detector array "may correspond to an image pixel." *Id.*,

14:37-40; *see also id.*, 4:9-11. Droz also teaches that each light detector array "comprises a plurality of single photon avalanche diodes (SPADs)." *Id.*, 13:3-6, 5:28-29, 18:55-57.

2. Motivation to Combine

A POSITA would have been motivated to combine Pacala-Johnson-Pardhan-Zhang-Spector for the reasons discussed in Sections IX.E.12 and XII.B.2. A POSITA would be motivated to further combine Droz in the manner discussed above. EX1003, ¶¶315-322.

First, a POSITA would have been motivated to apply the teachings of Droz to the LiDAR device of Pacala to improve the sensitivity of the light detectors. *Id.*, ¶316.

Second, Pacala teaches an express motivation to apply the SPAD array of Droz. Pacala states that its detector circuitry can be "integrated into the pixels of a detector array (*e.g.*, Single-Photon Avalanche Diode [SPAD] array)." EX1004, [0014]. Thus, a POSITA would have looked to teachings providing details regarding advantageous implementations of SPAD arrays. EX1003, ¶317.

Third, a POSITA would have understood that implementing an array of SPADs per pixel is desirable due to the recovery time associated with a SPAD. EX1003, ¶318. A "SPAD suffers some deadtime during which external circuitry operates to quench the SPAD so that it is ready to detect again." EX1001, 41:29-46.

Implementing an array of SPADs addresses deadtime because the plurality of SPADs would mean that at least some SPADs are likely to be ready to detect while others may be in recovery time. EX1003, ¶318.

A POSITA also would have had a reasonable expectation of success in combining the teachings of Droz with the Pacala-Johnson-Pardhan-Zhang-Spector combination. EX1003, ¶¶319-322.

XIV. GROUND 6: PACALA, JOHNSON, PARDHAN, ZHANG, DROZ, AND CAI IN FURTHER VIEW OF YAN RENDERS OBVIOUS CLAIMS 22-24.

A. U.S. Patent Pub. No. 2018/0003823 ("Yan")

Yan was filed April 28, 2017 and published January 4, 2018, and is thus prior art under 35 U.S.C. §102(a)(1). EX1012. Yan is analogous art. EX1003, ¶127.

Yan discloses "a range detecting device which can rotate 360 degrees." *Id.*, [0007]-[0008]. The device (purple) includes a transmitter (yellow) and receiver (orange) for emitting and receiving reflected pulses:

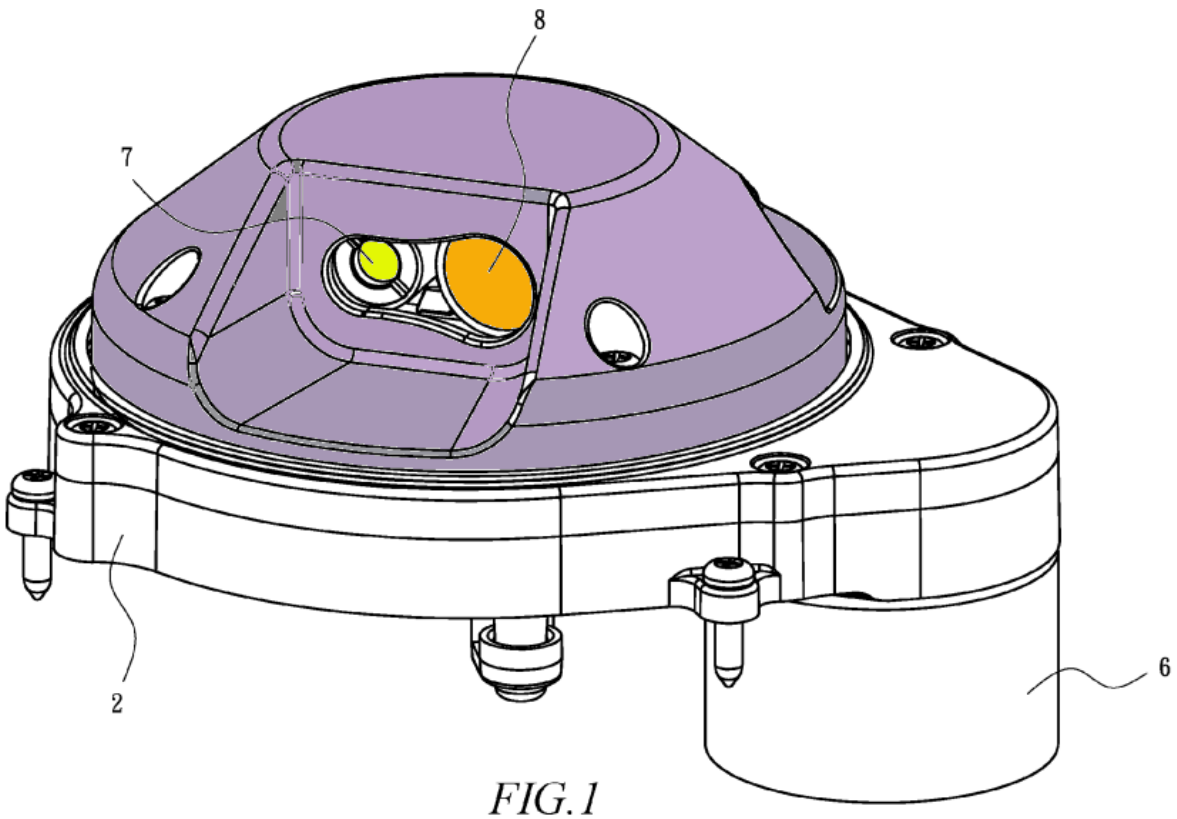

FIG. 1

Id., Fig. 1.

Yan teaches that a control module of a ranging device (orange) may be mounted to the rotating platform (red), which is coupled to a fixed base (blue), using alignment posts (green) and alignment cutouts (boxes):

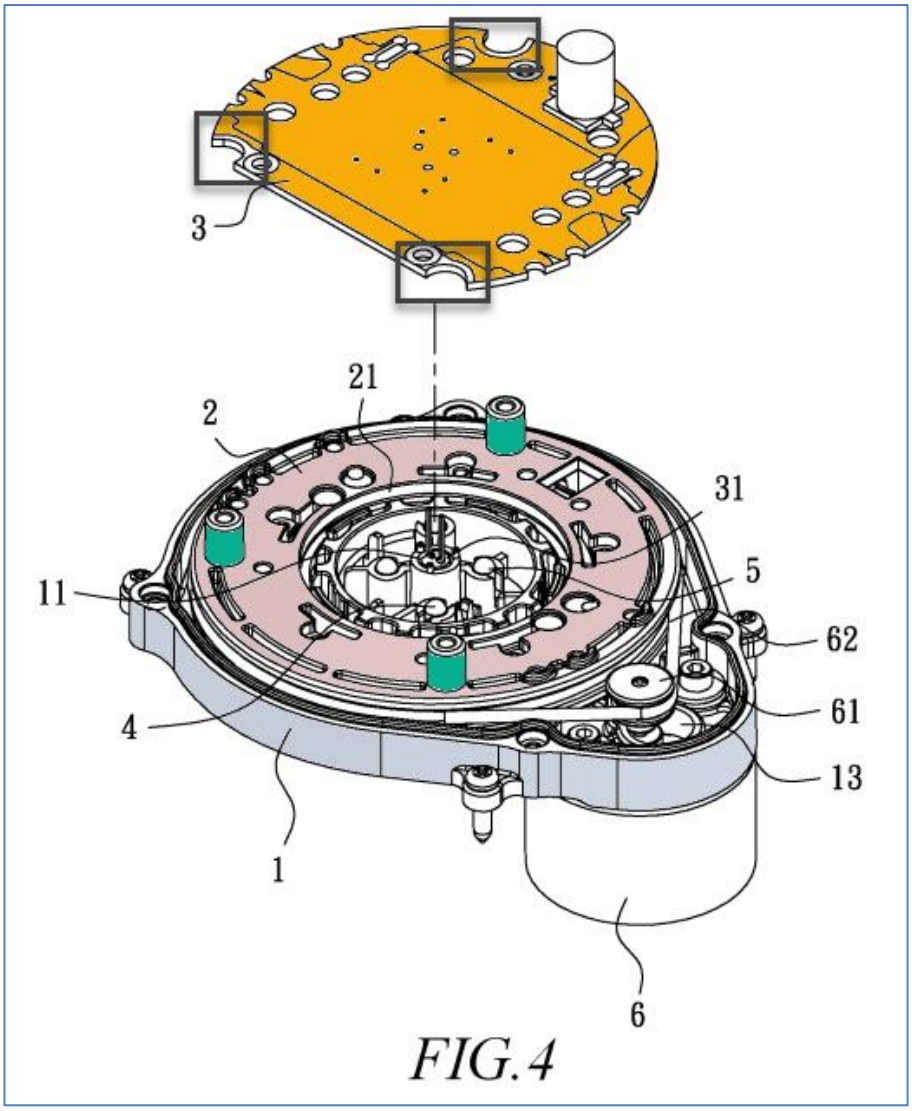

FIG. 4

EX1012, [0005]-[0007], [0068], [0070]-[0071], Fig. 4. The control module can include electronics for operating the ranging device and "analyz[ing] the reflected measurement signals." EX1012, [0074].

B. The Pacala-Johnson-Pardhan-Zhang-Droz-Cai-Yan Combination

Most limitations in claim 22 correspond to those in claims 1 and 14, and are thus rendered obvious by the Ground 1 references. *See* Sections IX.B.1-2. Claim 22 also includes limitations corresponding to dependent claims 13 and 17 that are

thus rendered obvious in view of Cai (Section X) and Droz (Section XIII). The remaining limitations relating to alignment posts and cutouts on the support component and fourth circuit board (respectively) are disclosed by Yan.

A POSITA would have also been motivated to combine the teachings of these references and would have had a reasonable expectation of success for the reasons discussed in the analysis below and in Section XIV.B.4.

1. Claim 22

a) 22(a)

Section IX.E.1(a); EX1003, ¶325.

b) 22(b)

Section IX.E.1(b); EX1003, ¶326.

c) 22(c)

Section IX.E.1(c); EX1003, ¶¶327-328.

d) 22(d)

Section IX.E.1(d); EX1003, ¶327-329.

e) 22(d.i)-(d.ii)

Johnson discloses that the stator circuit board assembly comprises first and second circuit boards that are parallel and adjacent to one another. The stator platform 330, shown in Figure 3A (left), is a "planar mounting surface" perpendicular to the axis of rotation (306) and has a top (330a) and bottom (330b):

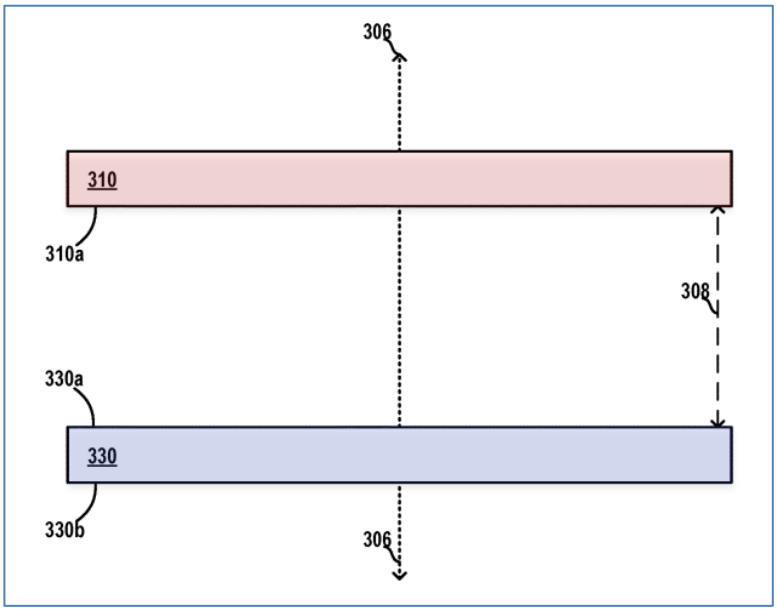

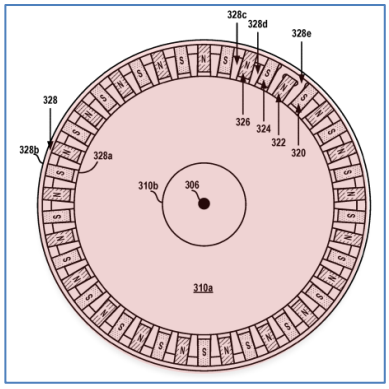

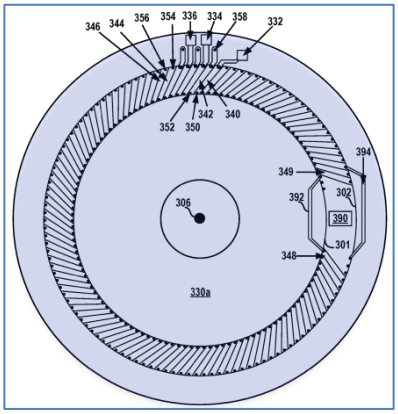

EX1005, 10:58-63, 11:66-12:6, 12:44-67, Figs. 3A, 3C. The stator platform includes a "multi-layer circuit board (*e.g.*, PCB)." *Id*. For instance, Figure 3C (top right) is disposed on the top layer (330a), and Figure 3D (bottom right) is "along a second layer of the circuit board," *e.g.*, "between sides 330a and 330b," or along bottom side (330b). *Id*., 12:1-6. Thus, each layer (corresponding to a circuit board) is adjacent and parallel to another. EX1003, ¶330.

Johnson also discloses an aperture formed through a central portion of each layer. For instance, the circuit boards may include a "center gap," which can be seen

in Figure 3C-3D (circular white center). EX1005, Figs. 3C-3D; *see also id*., 11:51-52; EX1003, ¶331.

A POSITA would have considered each layer of a multi-layer PCB to be a separate circuit board; however, in the alternative, it would have been obvious to use multiple separate circuit boards instead of a single multi-layer PCB. *See* Section IX.E.4; EX1003, ¶332.

f) 22(d.iii):

Section IX.E.1(h); EX1003, ¶333.

g) 22(e):

Section IX.E.1(e) and IX.E.1(g); EX1003, ¶334.

h) 22(e.i)

The Pacala-Johnson-Pardhan-Zhang-Droz-Cai-Yan combination renders obvious this limitation. EX1003, ¶¶335-339.

Pardhan discloses a support component (red and gray) that includes a lower and upper surface (topside and underside of plate 720), as well as a sleeve (728) that extends away from the lower surface and is fitted over the shaft (green):

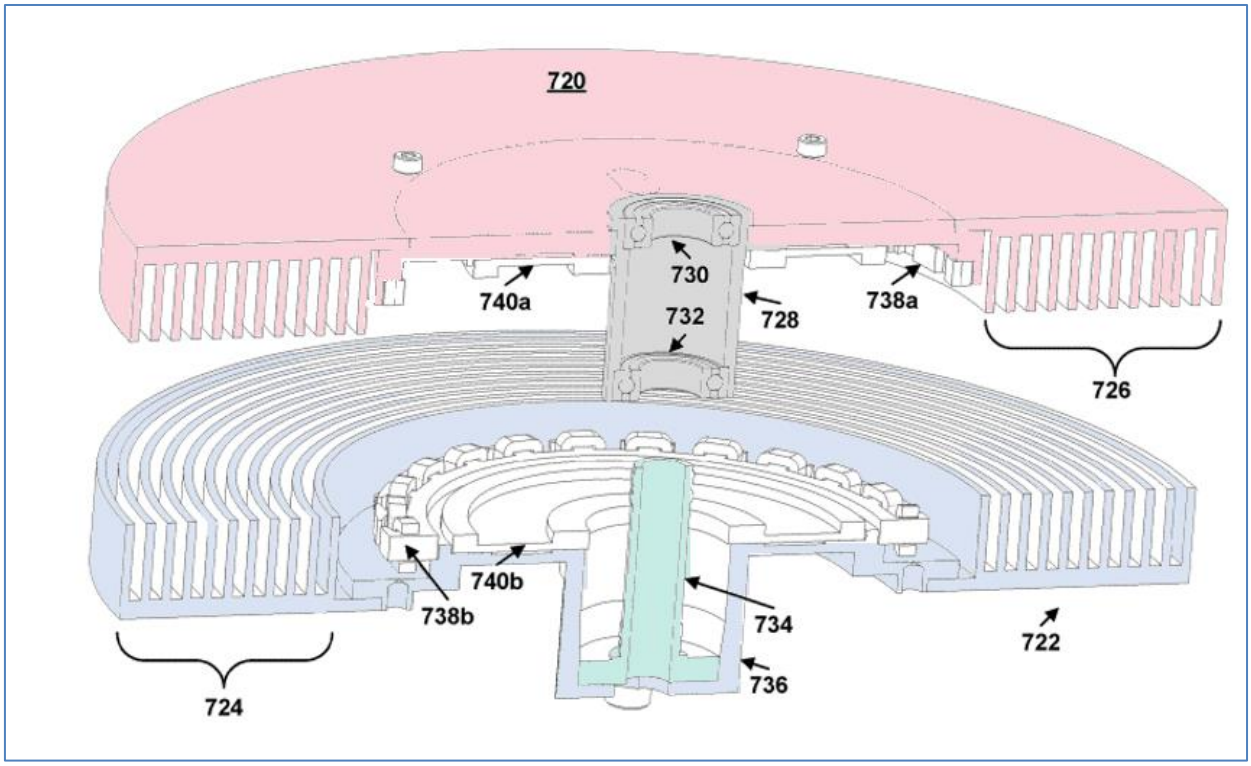

See Sections IX.E.1(e)-(f). Further, Pardhan, when combined with the knowledge of a POSITA or Zhang, renders obvious arms extending away from the sleeve. *See* Section IX.E.1(e); EX1003, ¶335.

Pardhan renders obvious a plurality of alignment posts extending away from the upper surface. EX1003, ¶336. Pardhan teaches the upper surface of the support component includes "mounting holes" (e.g., 510a-d) for mounting the LiDAR. EX1006, 17:55-62, Fig. 5A. The mounting holes (green) are shown in Figure 7B and are a "plurality of alignment posts":

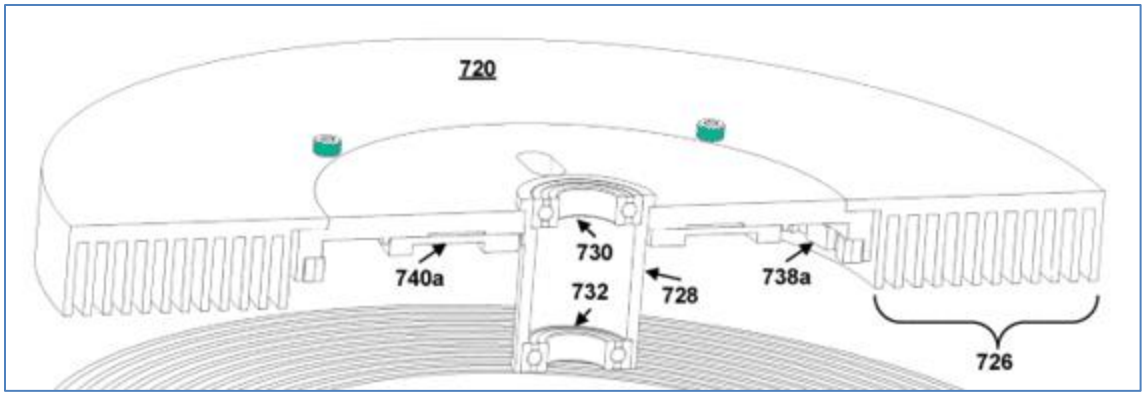

Id., Fig. 7B; EX1003, ¶336.

To the extent Pardhan is deemed not to expressly disclose alignment posts, a POSITA would have found it obvious to include alignment posts on the upper surface of the support component. *Id.*, ¶¶337-339.

First, implementing alignment posts was obvious in view of the knowledge of a POSITA. *Id.*, ¶338. Pardhan discloses that a heat source (purple), such as "LIDAR," may be directly or indirectly coupled to the upper surface of rotor 400 (which includes the support component):

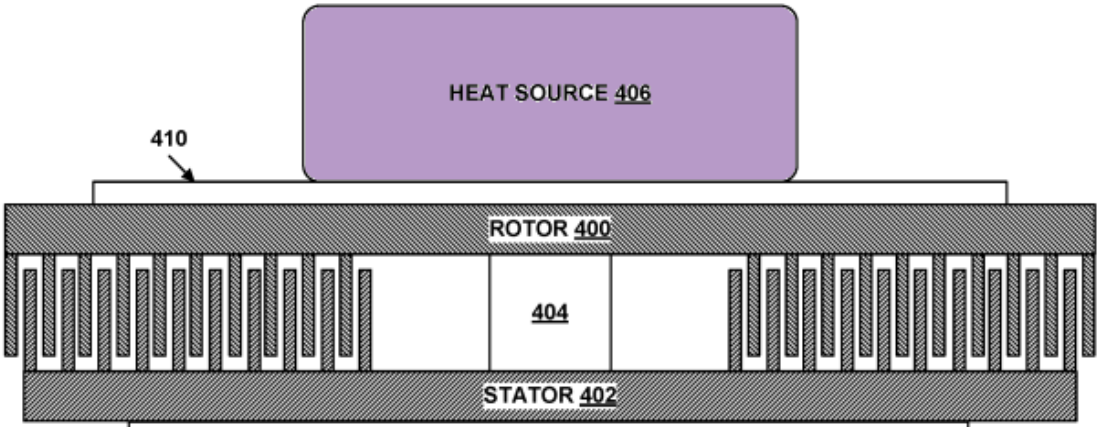

EX1006, 16:65-17:5, Fig. 4. A POSITA would have understood that it is important for a LiDAR sensor to be properly aligned, and alignment posts were a

known technique for ensuring such alignment. EX1003, ¶¶338, 63-64 (citing Exs. 1036-1039). The resulting system would otherwise operate in the same manner; the alignment posts merely ensure proper positioning of the LiDAR sensor. *Id.*

Second, implementing alignment posts was obvious in view of Yan. Figure 2 of Yan illustrates alignment posts (green) extending from a support component (red) to ensure the controller circuit board (orange) of the ranging device is properly aligned on the support component:

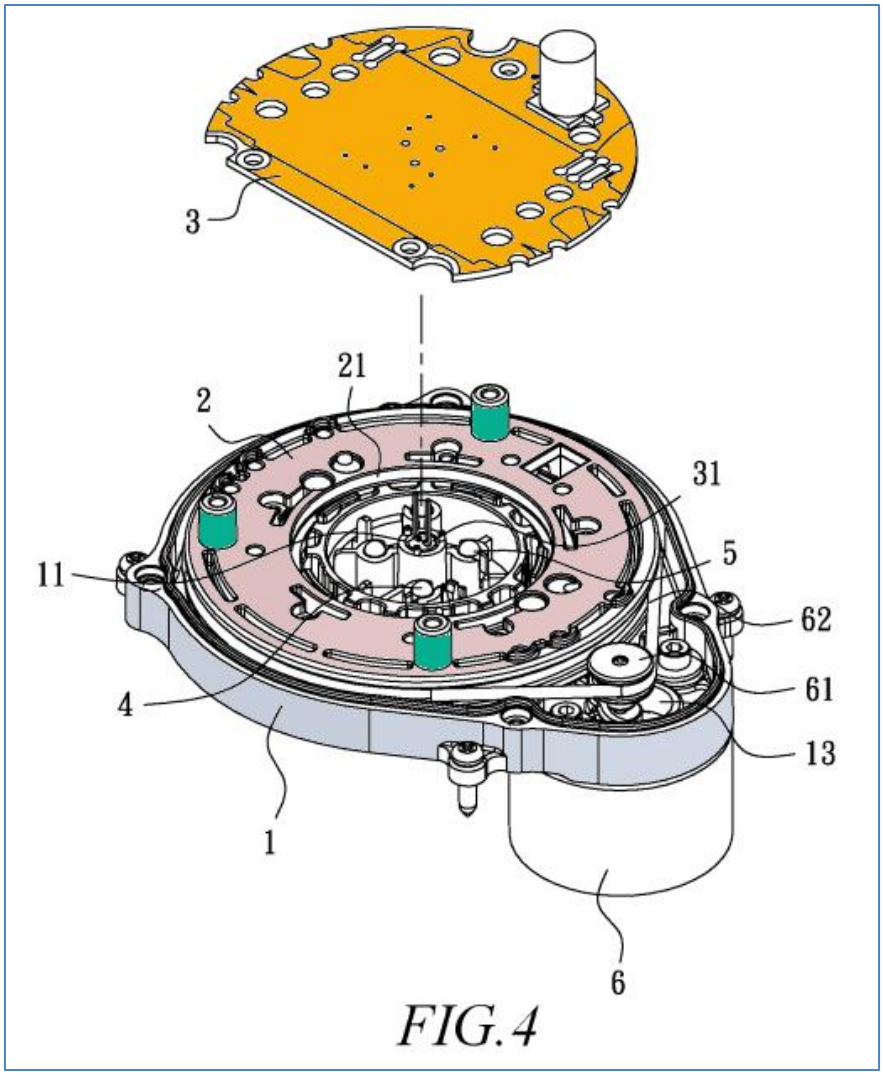

FIG.4

EX1012, [0005]-[0007], [0068], [0070]-[0071]. Thus, Yan confirms it was obvious to include alignment posts on the upper surface of Pardhan's support component to properly align a LiDAR device. EX1003, ¶339.

i) 22(e.ii)

The Pacala-Johnson-Pardhan-Zhang-Droz-Cai combination renders obvious this limitation. *See also* Section IX.E.1(g).[3] EX1003, ¶¶340-342.

For instance, Figure 3B (right) of Johnson illustrates an "an outer layer of a circuit board" that is on a bottom side (310a) of rotor platform 310:

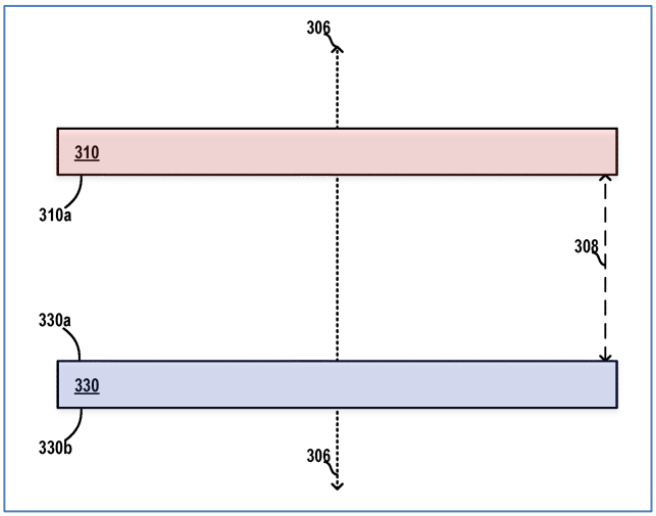

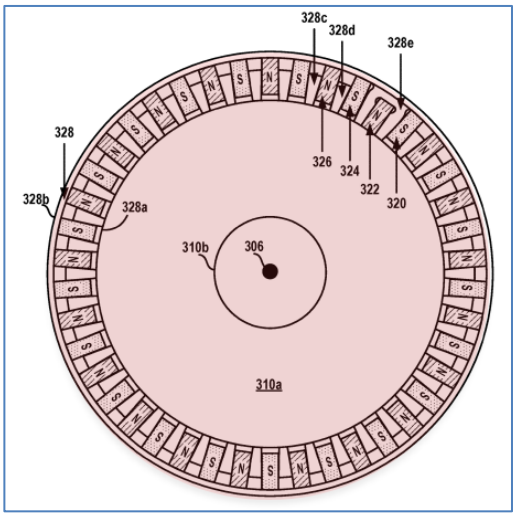

EX1005, Figs. 3A-3B, 10:58-62. It would have been obvious to mount this rotor circuit board to the bottom of a support component as taught by Pardhan:

[3] The "third circuit board" of claim 22 corresponds to the "rotor circuit board" of claims 1 and 14.

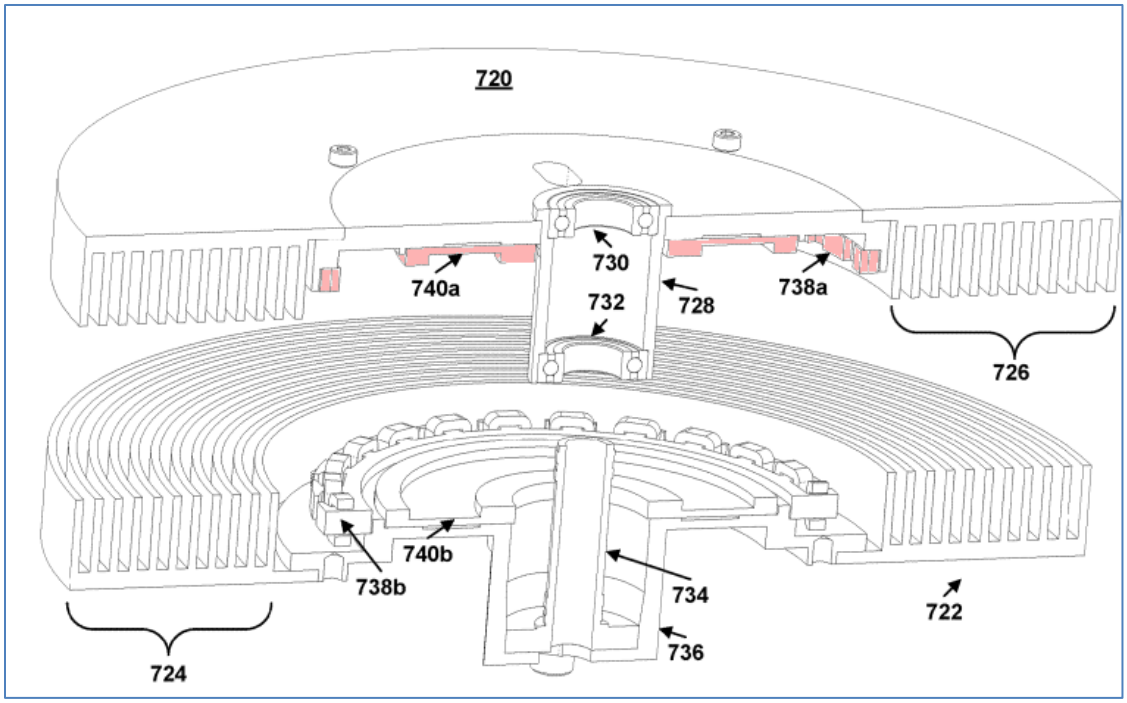

EX1006, 20:40-21:13, Fig. 7B; *see also* Section IX.E.1(g). A POSITA would have understood that the PCB layer in Figure 3B is the claimed "third circuit board." EX1003, ¶341.

Further, as discussed above, the stator circuit board in Figure 3C would have been disposed on the top side (330a) of the stator platform as the claimed "second circuit board." *See* Section XIV.2.e. In the assembled device, the circuit board of Figure 3C (on the top side of the stator) would be disposed in an opposing relationship and adjacent to the circuit board of Figure 3B (on the bottom side of the rotor). EX1005, 16:63-65, 17:10-14, 18:24-28, Fig. 3A; EX1003, ¶342. Figure 7B of Pardhan also confirms that the rotor and stator are in an opposing relationship. EX1006, Fig. 7B (above).

j) 22(e.iii)

The Pacala-Johnson-Pardhan-Zhang-Droz-Cai-Yan combination renders obvious this limitation. EX1003, ¶¶343-346.

Johnson teaches that electronic components may be mounted on a rotor platform. EX1005, 7:2-47, Fig. 2. As discussed in Section IX.E.4, a POSITA would have understood that space on Johnson's rotor circuit board (Figure 3B) is finite, such that it was obvious to provide additional rotor circuit boards. EX1003, ¶¶344-345. There are only two ways to mount these additional rotor circuit boards—above or below the support component—such that both were obvious. *See, e.g., Google v. Koninklijke Philips N.V.*, 765 Fed. Appx. 840, 844 (Fed. Cir. 2020) (where "only two options for what happens to a key" when a secondary character is selected—character substitution or returning to the default state—were possible both options "would have been obvious to try").

Further, Cai also confirms the obviousness of this limitation by expressly disclosing that a transceiver may be mounted at the center of a circuit board above the motor (*e.g.*, on the upper surface of a support component). *See* Section X.B.2. Cai explains that doing so improves the "reliabil[ity] [of] signal transmission" by "guaranty[ing]" the positions of the transceivers remain "relatively unchanged" and allowing for communication through the hollow shaft at the center of the motor. EX1008, [0002], [0030]; EX1003, ¶346.

Yan further renders this limitation obvious. For instance, Johnson teaches control circuitry (*e.g.*, a processor and controller) for operating sensor 212, and Yan teaches that a control circuit board (orange) for operating the ranging device can be mounted on the top surface of a support component (red):

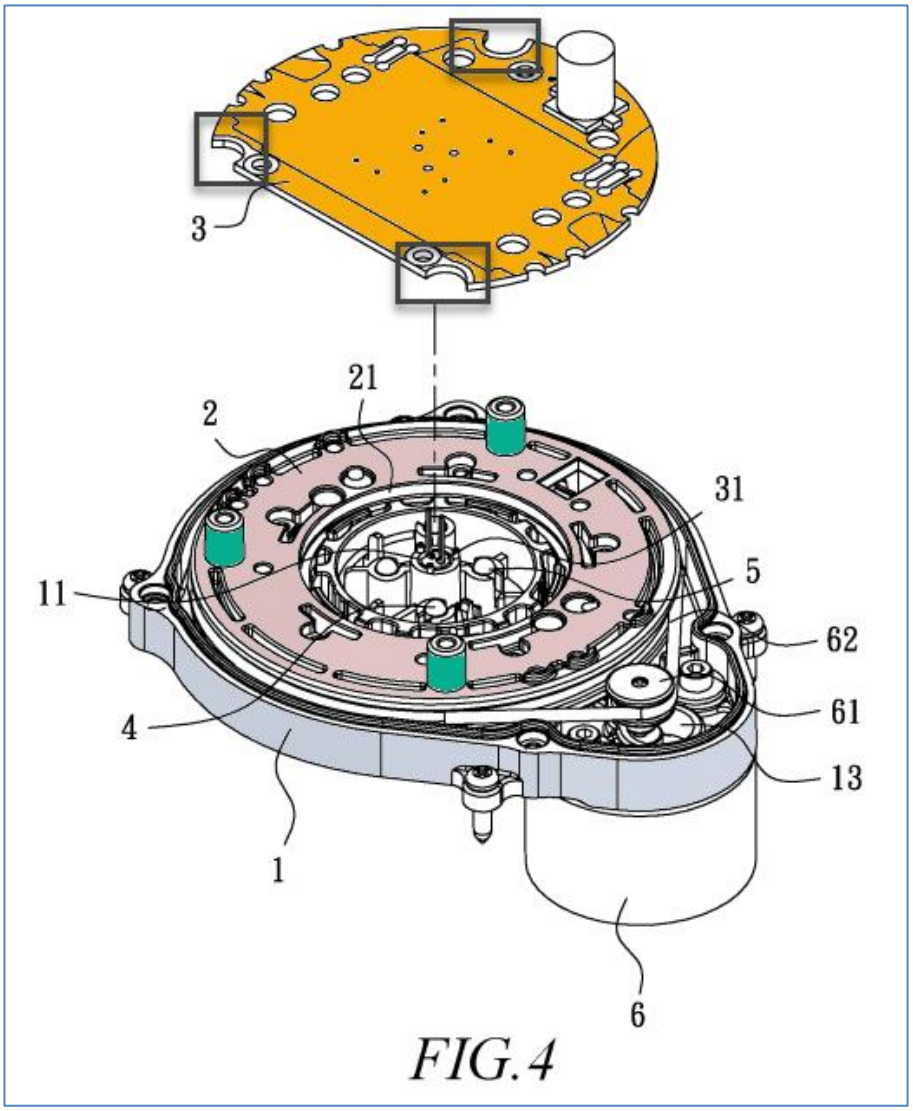

EX1012, Fig. 4. Yan also discloses that the control circuit board includes alignment cutouts (gray boxes) sized and shaped to accept alignment posts (green). Thus, a POSITA would have found it obvious to couple a control circuit board to the top

surface of Pardhan's support component, with alignment cutouts for positioning. EX1003, ¶347.

k) 22(e.iv)

Section IX.E.1(i); EX1003, ¶348.

l) 22(f.i)

Section IX.E.1(j); EX1003, ¶349.

m) 22(f.ii)

Section XIII.B.1; EX1003, ¶350.

n) 22(f.iii)

Section IX.E.8; EX1003, ¶351.

o) 22(g)

Section IX.E.1(k); EX1003, ¶352.

p) 22(h)

Sections IX.E.10 and X.D.4; EX1003, ¶353.

q) 22(i)

Sections IX.E.11 and X.B.5; EX1003, ¶354.

2. Claim 23

Sections XIV.B.1.e and XIV.B.1.i; EX1003, ¶355.

3. Claim 24

Section IX.E.7; EX1003, ¶¶356-357.

4. Motivation to Combine

A POSITA would have been motivated to combine Pacala-Johnson-Pardhan-Zhang-Droz-Cai for the reasons discussed in Sections IX.E.12, X.B.6 and XIII.B.2. A POSITA would be motivated to further combine Yan in the manner discussed above. EX1003, ¶358-361.

First, a POSITA would have been motivated to add means for aligning control circuitry of a ranging device, *e.g.* alignment posts, for mounting the device on the upper surface of a support structure such as Pardhan's support structure. EX1003, ¶359. Use of alignment posts to attach control circuitry to a rotating structure, as taught in Yan, merely reflects the use of a known technique to improve similar devices (rotating ranging devices) in the same way (using alignment posts to align the device on the upper surface of a support structure). *Id*., ¶¶359, 63-64 (citing EX1036-1039).

Second, a POSITA would have understood that proper alignment is critical to achieve accurate and reliable measurements from a ranging device. EX1003, ¶360. Pardhan itself discloses mounting holes 510a-d for attaching a light ranging device and control circuitry. EX1006, 17:55-62. Alignment posts and mounting holes are complementary structures. EX1003 ¶360. Thus, Pardhan provides an express motivation to add alignment posts to the upper surface of the support structure for aligning a light ranging device and its circuitry. *Id*.

A POSITA would have had a reasonable expectation of success in combining the teachings of the references in the manner discussed above. *Id.*, ¶361.

XV. GROUND 7: PACALA, JOHNSON, PARDHAN, ZHANG, DROZ, YAN, AND CAI IN VIEW OF SPECTOR RENDERS OBVIOUS CLAIM 25.

In the proposed Pacala-Johnson-Pardhan-Zhang-Droz-Yan-Cai are combined as set forth in Ground 6. *See* Section XIV. Spector is further combined as set forth in Ground 4. XII.

Spector discloses the additional limitation of claim 25. EX1003, ¶362. For example, Spector discloses that the light spots projected from its arrayed micro-optic are "focused on the individual optical detection sites." EX1010, 3:38-41; *see also id.*, 3:59-61 (apertures "limit[] visibility by each optical detection site to a single corresponding light spot"). A POSITA would have understood that Spector's implementation would result in an emitted illumination pattern that substantially matches the size and geometry of a plurality of non-overlapping fields-of-view of the plurality of pixels across a range of distances from the system, as recited in claim 25. EX1003, ¶¶363-364.

A POSITA would have been motivated to combine the teachings of Spector with the LiDAR device of Pacala and would have had a reasonable expectation of success for the reasons discussed in Sections XII.B.2.

XVI. GROUND 8: PACALA-2017, JOHNSON, PARDHAN, AND ZHANG RENDER OBVIOUS CLAIMS 1, 2, 4-9, 11-14, 16-17, 19-21

A. U.S. Patent Pub. No. 2017/0289524 ("Pacala-2017")

Pacala-2017 was filed September 26, 2016 and published October 5, 2017, and is thus prior art under 35 U.S.C. §102(a)(1)-(2). EX1013. It is assigned to Ouster, and shares two inventors with the '515 Patent. *Id*. It was published over one year before the priority date of the '515 Patent, so §102(b)(1) does not apply. Pacala-2017 is also analogous art to the '515 patent. EX1003, ¶133.

Pacala-2017 discloses a LiDAR device that can be "rotated about an axis." *Id*., [0016]. The LiDAR device is similar to that disclosed in the '515 Patent:

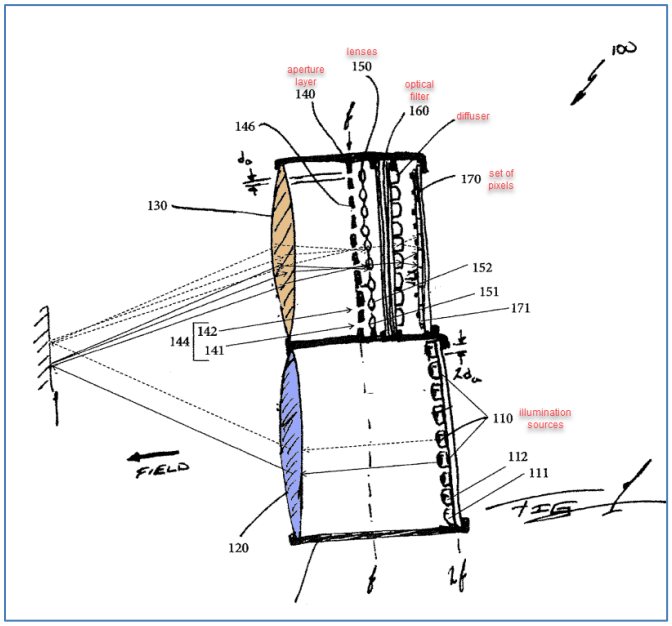

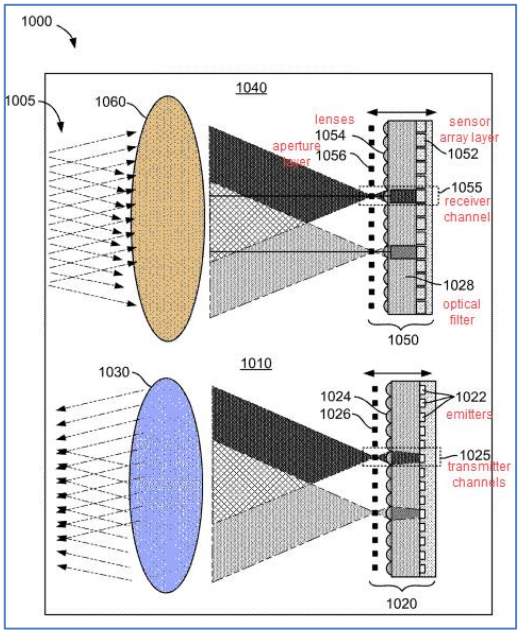

Compare EX1013, [0015]-[0018], [0056], Fig. 1 (left) *with* EX1001, 36:35-39:19, Fig. 10 (right); EX1003, ¶¶130-132. Like the '515 Patent, Pacala-2017 teaches a transmission module with a bulk transmitting optic (blue) and illumination

sources/emitters, and a light sensing module with a bulk receiver optic (orange) and a set of pixels/receiver channels. EX1013, [0015], [0018]-[0020], [0045]-[0048]. Each pixel has a corresponding "aperture in the aperture layer 140, [and] a corresponding lens in the set of lenses 150," which together form a "channel." *Id*., [0018]. The apertures define non-overlapping fields-of-view for their respective channels, and each aperture corresponds to a different illumination source in the transmission module. *Id*., [0016], [0021]-[0023], [0025]-[0026]. Thus, each aperture defines a field-of-view coincident with a discrete light spot output by its corresponding illumination source. *Id*., [0015], [0021].

B. The Pacala-2017-Johnson-Pardhan-Zhang Combination

For independent claims 1 and 14, Ground 1 relies upon Pacala for the overall structure of a light ranging system—namely, disclosure of the claimed enclosure (Limitations 1(b)/14(b)) and the light ranging device within the enclosure with transmit and receive modules (Limitations 1(i)/14(j)). Pacala is also relied upon in Ground 1 for the arrangement of transmit and receive modules in dependent claims 5-6.

This ground substitutes Pacala-2017 for Pacala. Pacala-2017 discloses a light ranging device that is substantially similar to that disclosed in the '515 Patent. A POSITA would have been motivated to combine the teachings of these references

and would have had a reasonable expectation in doing so for the reasons discussed in Sections XVI.B.13.

1. Claims 1/14

a) Limitations 1(b)/14(b)

The Pacala-2017-Johnson-Pardhan-Zhang combination discloses limitations 1(b)/14(b). EX1003, ¶367.

For instance, Pardhan discloses that the light ranging system is within an enclosure having a base and a top cover. EX1006, 6:6-16, Figs. 1, 7A. Pardhan also discloses that the enclosure has an optically transparent window extending fully around a periphery of the enclosure. Ex1006, 11:52-58 ("if the housing 122 were to be stationary as the LIDAR device 100 rotates within the housing 122, then the housing 122 would likely be transparent…").

b) Limitations 1(i)/14(j)

Pacala-2017 discloses a light ranging device that is "rotated about an axis" and includes a "transmit module" with a "bulk transmitting optic" (blue) and a "receive module" with a "bulk receiver optic" (orange). EX1013, [0015]-[0016], [0025], Figs. 1-2. The LiDAR device in Pacala-2017 is substantially similar to the '515 Patent, as shown below:

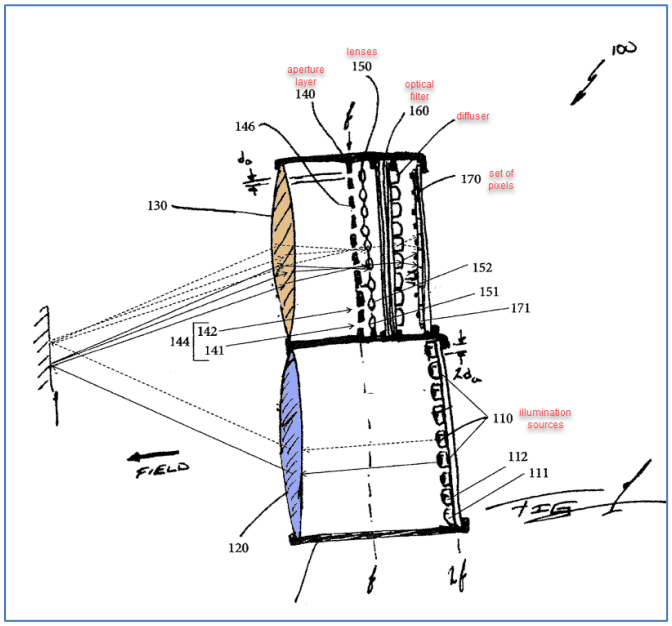

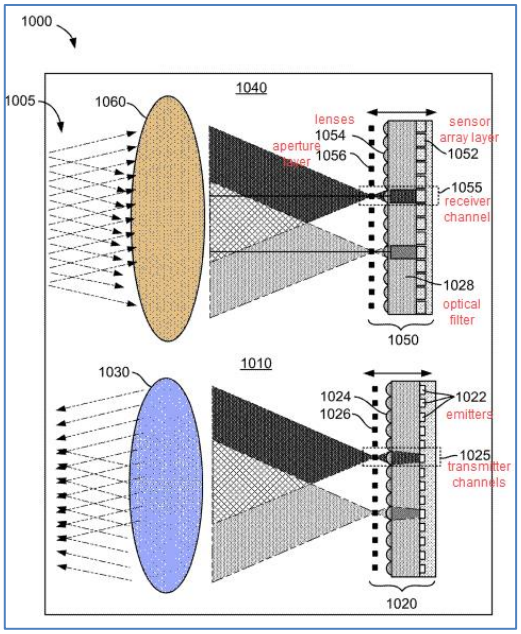

Compare EX1013, [0015]-[0018], [0056], Fig. 1 (left) *with* EX1001, 36:35-39:19, Fig. 10 (right); EX1003, ¶369. Thus, Pacala-2017 discloses Limitations 1(i) and 14(j) in the same way as the '515 Patent. *Id.*

c) Remaining Limitations

The remaining limitations are disclosed by the Johnson-Pardhan-Zhang combination in the same manner as was discussed in Ground 1. *See* Sections IX.E.1-2; EX1003, ¶370.

2. Claim 2

Section IX.E.3; EX1003, ¶371.

3. Claim 4

Section IX.E.4; EX1003, ¶372.

4. Claim 5

Pacala-2017 discloses that the light ranging device is mounted within a ranging device housing disposed within the enclosure, and that the transmit module is mounted to a first portion (blue) and the receive module is mounted to a second portion (orange) of the ranging device housing:

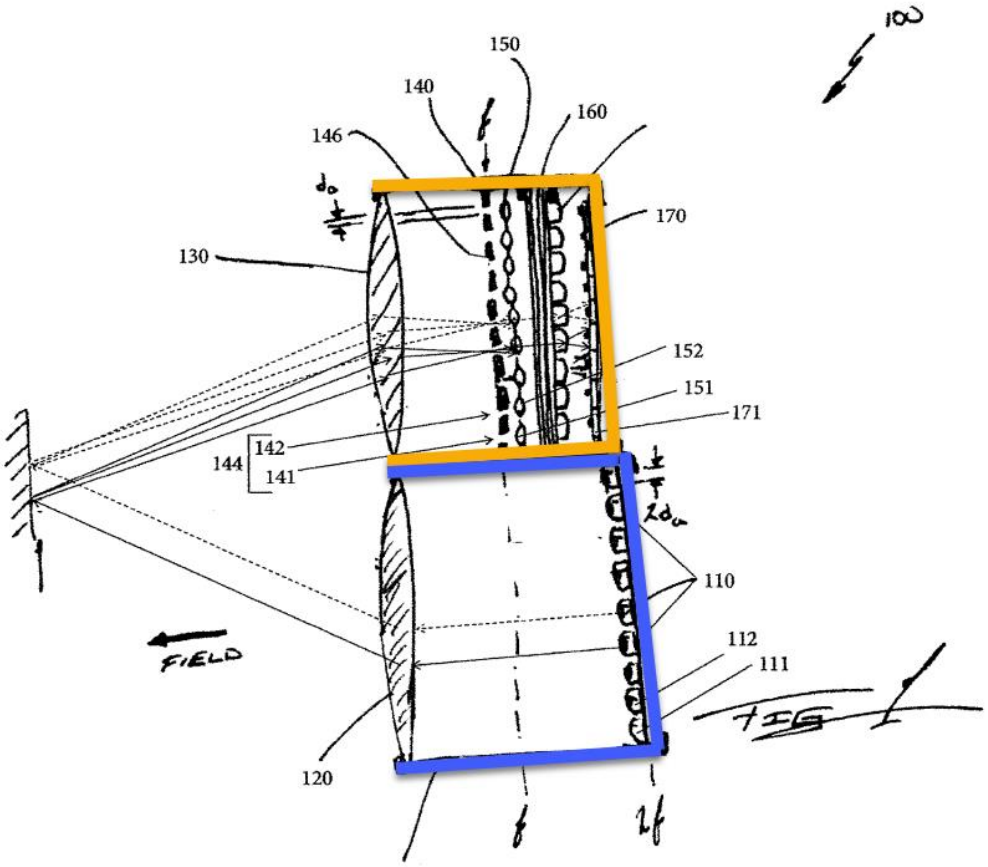

EX1013, Fig. 1; EX1003, ¶¶373-375. In the combined system, the LiDAR device would be mounted on the surface of the rotor platform that includes the fourth circuit board, such that it is between the fourth circuit board and the enclosure top. EX1003, ¶376.

5. Claim 6

Pacala-2017 discloses that the "transmit module" comprises the claimed "fifth circuit board" and the "receive module" comprises the claimed "sixth circuit board" (orange), as shown below:

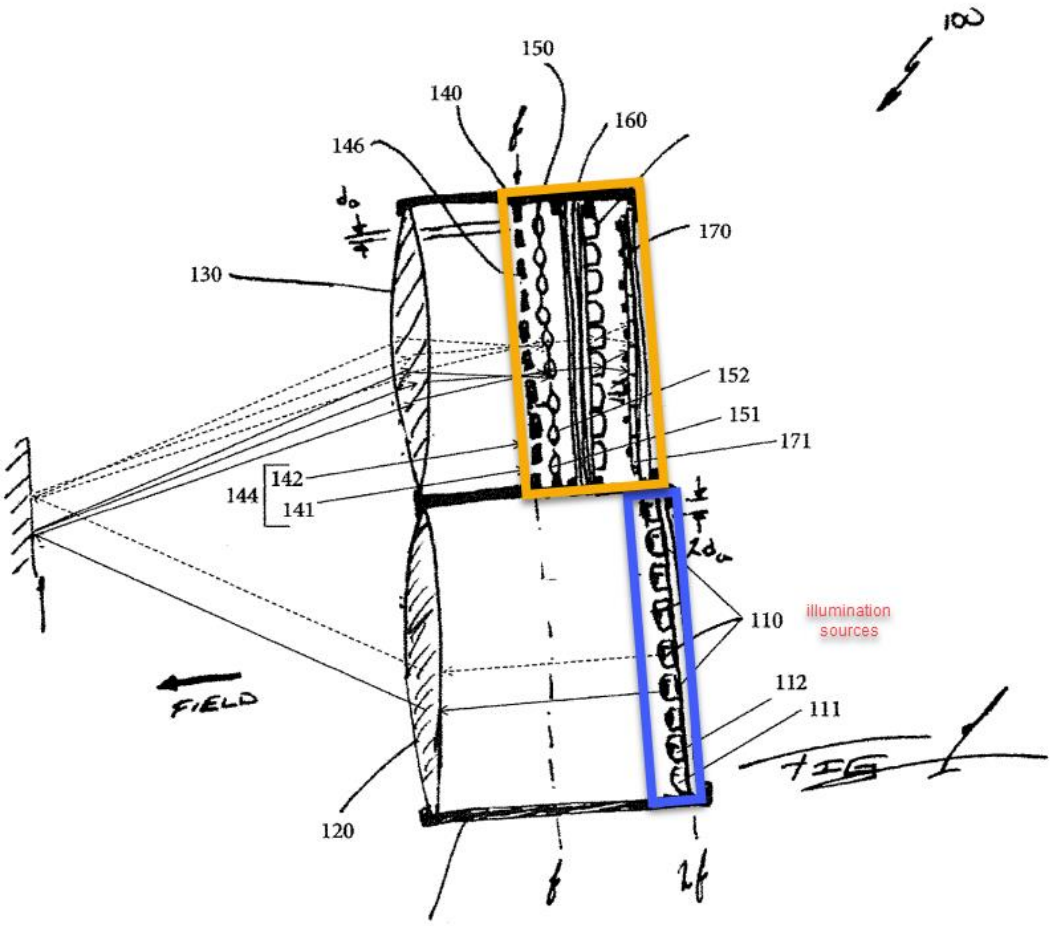

EX1013, [0016]-[0018], [0056], Fig. 1; EX1003, ¶¶377-378.

Pacala-2017 further teaches that the light ranging device is "rotated about an axis" that is "parallel" with the "column of apertures." *Id.*, 2:27-31. In order for that to be the case, a POSITA would have understood that the housing portions to

which the transmit and receive modules are mounted must themselves be "parallel to the axis of rotation." EX1003, ¶379.

6. Claims 7/16

Section IX.E.7; EX1003, ¶380.

7. Claims 8/19

Pacala-2017 discloses that the additional limitations recited in these claims are a basic function of LiDAR: "Based on the time elapsed between emission of the pulse of light and detection of the returned pulse of light, a distance is estimated." EX1013, 1:21-33; *see also* EX1015, 1:14-22; EX1003, ¶381.

8. Claim 9

Section IX.E.9; EX1003, ¶382.

9. Claim 11

Section IX.E.10; EX1003, ¶383.

10. Claims 12/20

Pacala-2017 discloses that its detector circuitry comprises a plurality of pixels (*e.g.*, a "set of pixels 170"). EX1013, [0037]-[0043], Fig. 3, Claims 6-7, 9; EX1003, ¶385.

Pacala-2017 also teaches each pixel in the plurality of pixels has a field-of-view that is non-overlapping with the fields-of-view of all other pixels in the plurality of pixels. EX1003, ¶386. For instance, Figures 2-3 show "a column of offset apertures arranged behind a bulk imaging optic 130" that "defin[e] discrete

fields of view in a field ahead of the bulk imaging optic 130 (that is non-overlapping fields of view beyond a threshold distance from the system)." EX1013, [0016], [0024]; Claims 1, 6-7.

Further, the illumination sources (*e.g.*, 111-112) project discrete beams of light into the surrounding environment according to an illumination pattern wherein each beam is coincident with the field-of-view of one pixel. EX1013, [0027] ("illumination source 111 projects an illuminating beam that is substantially coincident (and substantially the same size as or minimally larger than) the field-of-view defined by the first aperture 141"), [0023], [0025], [0044], [0056], Figs. 1-4; EX1003, ¶387.

11. Claims 13/21

Pacala-2017 discloses that each pixel in the plurality of pixels comprises a plurality of SPADs: "each pixel can include a single row of 16 SPADs." EX1013, [0039]-[0043], Fig. 3, Claim 9; EX1003, ¶389.

12. Claims 17

Section IX.E.11; EX1003, ¶390.

13. Motivation to Combine

A POSITA would have been motivated to combine Johnson-Pardhan-Zhang for the reasons discussed in Sections IX.E.12. A POSITA would be motivated to further combine Pacala-2017 in the manner discussed above. EX1003, ¶¶391-393.

First, Pacala-2017 discloses a LiDAR device that can be "rotated about an axis" (EX1013, [0016]), but does not disclose the details of the rotation structures. Similarly, Johnson-Pardhan-Zhang teach that the "LIDAR unit [] may be any sensor." EX1005, 7:23-26; EX1006, 13:46-51. Thus, a POSITA would have been motivated to integrate a LiDAR sensor such as Pacala-2017 on the surface of the rotational structure. *See Wavetronix*, 746 Fed. Appx 984 at 991; EX1003, ¶392.

Second, a POSITA would have been motivated to combine Pacala-2017, Johnson, Pardhan, and Zhang as described above because the combination merely combines prior art elements according to known methods. EX1003, ¶392; Section IX.E.12.

XVII. GROUND 9: PACALA-2017, JOHNSON, PARDHAN, ZHANG IN FURTHER VIEW OF CAI AND YAN RENDER CLAIMS 22-25 OBVIOUS.

A. The Pacala-2017-Johnson-Pardhan-Zhang-Cai-Yan Combination

For claims 22-24, Ground 6 relies upon Pacala for the overall structure of a light ranging system—namely, disclosure of the claimed enclosure (Limitation 22(b)) and the claimed light ranging device within the enclosure with transmit and receive modules (Limitations 22(f.i) and 22(f.iii)). Similarly, Ground 7 relies upon Spector for the additional limitation of claim 25.

This ground substitutes Pacala-2017 for Pacala and Spector. Thus, Johnson-Pardhan-Zhang-Cai-Yan are combined in the same way as discussed in Section

XIV.B. The combined system is then further modified by integrating the LiDAR device of Pacala-2017, rather than Pacala-Spector.

A POSITA would have also been motivated to combine the teachings of these references and would have had a reasonable expectation of success for the reasons discussed in the analysis below and in Section XVII.A.3.

1. Claims 22-24

a) Limitations 22(b), 22(f.i), 22(f.iii)

Pardhan discloses the claimed enclosure recited in Limitation 22(b). *See* Section XVI.B.1.a. And Pacala-2017 discloses the claim light ranging device recited in Limitations 22(f.i) and 22(f.iii). *See* Sections XVI.B.1.b and XVI.B.7; EX1003, ¶¶399-401.

b) Remaining Limitations

The remaining limitations are disclosed by Johnson, Pardhan, Zhang, Cai and Yan in the same manner as was discussed in Ground 6. *See* Sections XIV.B.1; EX1003, ¶402.

2. Claim 25

The Pacala-2017-Johnson-Pardhan-Zhang-Cai-Yan combination also renders obvious claim 25. Pacala-2017 states that emitters "project illuminating beams into a field ahead of the system according to an illumination pattern that substantially matches—in size and geometry across a range of distances from the system—the fields of view of the apertures." EX1013, [0016], [0045]-[0046], Fig.

2. The fields-of-view of the apertures are non-overlapping and correspond to the fields-of-view of individual pixels. EX1003, ¶404.

3. Motivation to Combine

A POSITA would have been motivated to combine Johnson-Pardhan-Zhang-Cai-Yan for the reasons discussed in Section XIV.B.4. A POSITA would be motivated to further combine Pacala-2017 in the manner discussed above for the reasons discussed in Section XVI.B.13; EX1003, ¶405.

XVIII. DISCRETIONARY FACTORS

A. §314

The *Fintiv* factors weigh against discretionary denial. *See Apple Inc. v. Fintiv, Inc.*, IPR2020-00019, slip op. at 5–6 (PTAB Mar. 20, 2020) (Paper 11) (precedential).

Although Ouster filed a district court complaint in Delaware (EX1018), that action was stayed before a responsive pleading was served (EX1019). No trial date has been set in the district court action, and invalidity is unlikely to be resolved before a Final Written Decision, particularly in light of the early stay, which remains in effect. In the ITC Action, the presiding Administrative Law Judge has issue an initial determination granting Hesai's motion to terminate in view of an arbitration Hesai filed against Ouster (EX1019). These facts favor granting institution under the *Fintiv* framework.

B. §325(d)

The Board should decline to deny institution under §325(d).

First, during prosecution of the '515 Patent the Examiner did not issue a single substantive rejection, and the only prior art reference identified by the Examiner is not relied upon here. EX1002.

Second, although Pacala, Pacala-2017, Pardhan, and Yan are cited on the face of the '515 Patent, they were identified in IDSs among dozens of references. The references were not included in a substantive office action, and there is no indication the Examiner considered them on the merits. *See Becton, Dickinson & Co. v. B. Braun Melsungen AG*, IPR2017-01586, slip op. at 17–18 (PTAB Dec. 15, 2017) (Paper 8) (precedential). Moreover, other references in this Petition were neither cited nor considered during prosecution.

Furthermore, it was material error for the examiner ***not*** to rely on these references as a basis for rejection because the references teach the elements of the claimed invention and render the claims as a whole obvious, as shown above.

XIX. CONCLUSION

Hesai requests that the Board institute IPR.

Respectfully submitted,

Date: September 14, 2023

/s/ *Jared W. Newton*

Jared W. Newton
Reg. No. 65,818
jarednewton@quinnemanuel.com

QUINN EMANUEL URQUHART &
SULLIVAN LLP
1300 I Street NW, 9th Floor
Washington, DC 20005
Tel: (202) 538-8000
Fax: (202) 538-8100

Counsel for Petitioner Hesai

CERTIFICATION UNDER 37 C.F.R. §42.24

Under the provisions of 37 C.F.R. §42.24, the undersigned hereby certifies that the word count for the foregoing Petition for *inter partes* review totals 13,911 words, not including the table of contents, table of authorities, mandatory notices, certificates, listing of exhibits, or listing of claims, as permitted under 37 C.F.R. §42.24(a)(i).

Date: September 14, 2023

/s/ *Jared W. Newton*

Jared Newton
Reg. No. 65,818
jarednewton@quinnemanuel.com
Quinn Emanuel Urquhart & Sullivan
1300 I Street NW, 9th Floor
Washington, DC 20005
Tel: (202) 538-8000
Fax: (202) 538-8100

CERTIFICATE OF SERVICE

Pursuant to 37 C.F.R. §§42.6(e), 42.105(a), the undersigned hereby certifies service on the Patent Owner of a copy of this Petition, its respective exhibits, and Petitioner's Power of Attorney at the official correspondence address for the attorney of record for the '515 Patent as shown in USPTO Patent Center via Federal Express on September 13, 2023:

Kilpatrick Townsend & Stockton LLP - West Coast
Mailstop: IP Docketing - 22
1100 Peachtree Street
Suite 2800
Atlanta, GA 30309
UNITED STATES

Date: September 14, 2023

/s/ *Jared W. Newton*

Jared Newton
Reg. No. 65,818
jarednewton@quinnemanuel.com
Quinn Emanuel Urquhart & Sullivan
1300 I Street NW, 9th Floor
Washington, DC 20005
Tel: (202) 538-8000
Fax: (202) 538-8100