US009804264B2

(12) **United States Patent**
Villeneuve et al.

(10) **Patent No.: US 9,804,264 B2**
(45) **Date of Patent: Oct. 31, 2017**

(54) **LIDAR SYSTEM WITH DISTRIBUTED LASER AND MULTIPLE SENSOR HEADS**

(71) Applicant: **Luminar Technologies, Inc.**, Portola Valley, CA (US)

(72) Inventors: **Alain Villeneuve**, Mont-Royal (CA); **Jason M. Eichenholz**, Orlando, FL (US)

(73) Assignee: **Luminar Technologies, Inc.**, Portola Valley, CA (US)

(*) Notice: Subject to any disclaimer, the term of this patent is extended or adjusted under 35 U.S.C. 154(b) by 0 days.

(21) Appl. No.: **15/470,730**

(22) Filed: **Mar. 27, 2017**

(65) **Prior Publication Data**

US 2017/0199277 A1 Jul. 13, 2017

Related U.S. Application Data

(63) Continuation of application No. 15/363,726, filed on Nov. 29, 2016.

(60) Provisional application No. 62/261,214, filed on Nov. 30, 2015.

(51) **Int. Cl.**

G01S 17/10	(2006.01)
G01S 7/48	(2006.01)
G01S 7/481	(2006.01)
G01S 17/93	(2006.01)
G01S 7/486	(2006.01)
G01S 7/484	(2006.01)
H01S 3/067	(2006.01)

(52) **U.S. Cl.**

CPC ***G01S 17/10*** (2013.01); ***G01S 7/4804*** (2013.01); ***G01S 7/484*** (2013.01); ***G01S 7/4816*** (2013.01); ***G01S 7/4818*** (2013.01); ***G01S 7/4865*** (2013.01); ***G01S 17/936*** (2013.01); ***H01S 3/06754*** (2013.01)

(58) **Field of Classification Search**

CPC G01S 17/87; G01S 17/95; G01S 17/58; G01S 7/4818; G01P 5/26

See application file for complete search history.

(56) **References Cited**

U.S. PATENT DOCUMENTS

5,198,657	A	3/1993	Trost et al.
5,696,778	A	12/1997	MacPherson
5,867,305	A	2/1999	Waarts et al.
5,872,621	A	2/1999	Wilkerson et al.
5,892,575	A	4/1999	Marino

(Continued)

OTHER PUBLICATIONS

Search Report and Written Opinion in corresponding PCT Application No. PCT/US2016/064020 dated Apr. 4, 2017, 37 pgs.
U.S. Appl. No. 15/180,580, filed Jun. 13, 2016, Hall.

Primary Examiner — Luke D Ratcliffe
(74) *Attorney, Agent, or Firm* — Knobbe, Martens, Olson & Bear, LLP

(57) **ABSTRACT**

A lidar system which includes one or more light sources to produce one or more optical signals and a demultiplexer to separate the one or more optical signals into a plurality of sub-portions which may be distributed to a plurality of sensor heads. The sensor heads emit the sub-portions of the one or more optical signals into a plurality of fields of view and to detect reflected or scattered light from the fields of view. The lidar system also includes one or more optical amplifiers and one or more filters to reduce amplified spontaneous emission produced by the one or more optical amplifiers.

25 Claims, 25 Drawing Sheets

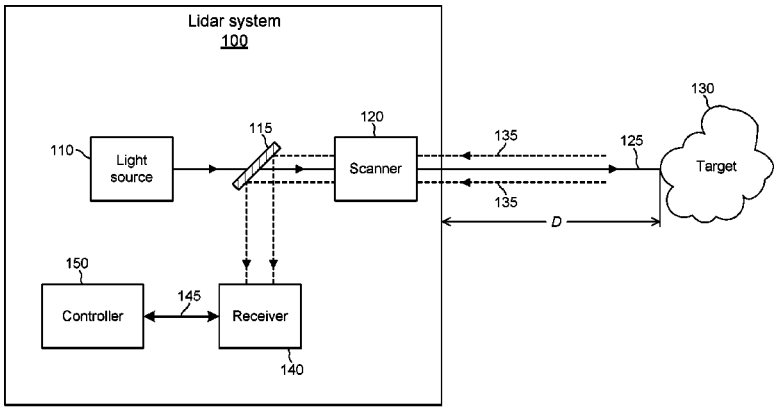

Exhibit 1044
Hesai v. Ouster
IPR2023-01456

(56) **References Cited**

U.S. PATENT DOCUMENTS

6,449,384 B2 9/2002 Laumeyer et al.
6,710,324 B2 3/2004 Hipp
6,723,975 B2 4/2004 Saccomanno
6,747,747 B2 6/2004 Hipp
6,759,649 B2 7/2004 Hipp
7,092,548 B2 8/2006 Laumeyer et al.
7,209,221 B2 4/2007 Breed et al.
7,345,271 B2 3/2008 Boehlau et al.
7,443,903 B2 10/2008 Leonardo et al.
7,532,311 B2 5/2009 Henderson et al.
7,570,793 B2 8/2009 Lages et al.
7,583,364 B1 9/2009 Mayor et al.
7,649,920 B2 1/2010 Welford
7,652,752 B2 1/2010 Fetzer et al.
7,872,794 B1 1/2011 Minelly et al.
7,902,570 B2 3/2011 Itzler et al.
7,945,408 B2 5/2011 Dimsdale et al.
7,969,558 B2 6/2011 Hall
7,995,796 B2 8/2011 Retterath et al.
8,059,263 B2 11/2011 Haberer et al.
8,072,663 B2 12/2011 O'Neill et al.
8,081,301 B2 12/2011 Stann et al.
8,138,849 B2 3/2012 West et al.
8,279,420 B2 10/2012 Ludwig et al.
8,280,623 B2 10/2012 Trepagnier et al.
8,346,480 B2 1/2013 Trepagnier et al.
8,364,334 B2 1/2013 Au et al.
8,452,561 B2 5/2013 Dimsdale et al.
8,541,744 B1 9/2013 Liu
8,548,014 B2 10/2013 Fermann et al.
8,625,080 B2 1/2014 Heizmann et al.
8,675,181 B2 3/2014 Hall
8,723,955 B2 5/2014 Kiehn et al.
8,767,190 B2 7/2014 Hall
8,796,605 B2 8/2014 Mordarski et al.
8,804,787 B1 8/2014 Coleman et al.
8,836,922 B1 9/2014 Pennecot et al.
8,880,296 B2 11/2014 Breed
8,896,818 B2 11/2014 Walsh et al.
8,934,509 B2 1/2015 Savage-Leuchs et al.
9,000,347 B2 4/2015 Woodward et al.
9,041,136 B2 5/2015 Chia
9,048,370 B1 6/2015 Urmson et al.
9,063,549 B1 6/2015 Pennecot et al.
9,069,060 B1 6/2015 Zbrozek et al.
9,074,878 B2 7/2015 Steffey et al.
9,086,273 B1 7/2015 Gruver et al.
9,086,481 B1 7/2015 Dowdall et al.
9,091,754 B2 7/2015 d'Aligny
9,103,669 B2 8/2015 Giacotto et al.
9,121,703 B1 9/2015 Droz et al.
9,160,140 B2 10/2015 Gusev et al.
9,170,333 B2 10/2015 Mheen et al.
9,199,641 B2 12/2015 Ferguson et al.
9,213,085 B2 12/2015 Kanter
9,239,260 B2 1/2016 Bayha et al.
9,246,041 B1 1/2016 Clausen et al.
9,285,464 B2 3/2016 Pennecot et al.
9,285,477 B1 3/2016 Smith et al.
9,297,901 B2 3/2016 Bayha et al.
9,299,731 B1 3/2016 Lenius et al.
9,304,154 B1 4/2016 Droz et al.
9,304,203 B1 4/2016 Droz et al.
9,304,316 B2 4/2016 Weiss et al.
9,310,471 B2 4/2016 Sayyah et al.
9,335,255 B2 5/2016 Retterath et al.
9,360,554 B2 6/2016 Retterath et al.
9,368,933 B1 6/2016 Nijjar et al.
9,383,201 B2 7/2016 Jachman et al.
9,383,445 B2 7/2016 Lu et al.
9,383,753 B1 7/2016 Templeton et al.
2002/0041435 A1 4/2002 Krummrich
2002/0060784 A1 5/2002 Pack et al.
2003/0043058 A1 3/2003 Jamieson et al.
2005/0214690 A1 9/2005 Verheijden et al.
2006/0231771 A1 10/2006 Lee et al.
2006/0290920 A1 12/2006 Kämpchen et al.
2007/0040121 A1 2/2007 Kalayeh
2007/0182949 A1 8/2007 Niclass
2008/0027591 A1 1/2008 Lenser et al.
2008/0074640 A1 3/2008 Walsh et al.
2008/0181266 A1 7/2008 Deladurantaye et al.
2009/0122295 A1 5/2009 Eaton
2009/0262760 A1 10/2009 Krupkin et al.
2009/0273770 A1 11/2009 Bauhahn et al.
2010/0034221 A1 2/2010 Dragic
2010/0128744 A1 5/2010 Deladurantaye et al.
2011/0085149 A1 4/2011 Nathan
2012/0130588 A1* 5/2012 Hukkeri G01S 7/4815 701/36
2012/0168605 A1 7/2012 Milanovic
2012/0206712 A1* 8/2012 Chang G01S 17/87 356/28
2012/0227263 A1 9/2012 Leclair et al.
2012/0268105 A1 10/2012 Mann et al.
2013/0010820 A1 1/2013 Curtis
2013/0033742 A1 2/2013 Rogers et al.
2013/0282208 A1 10/2013 Mendez-Rodriguez et al.
2014/0111805 A1 4/2014 Albert et al.
2014/0146303 A1 5/2014 Mitchell et al.
2014/0168631 A1 6/2014 Haslim et al.
2014/0176933 A1 6/2014 Haslim et al.
2014/0211194 A1 7/2014 Pacala et al.
2014/0268098 A1 9/2014 Schwarz et al.
2014/0268311 A1 9/2014 Zhu
2014/0293263 A1 10/2014 Justice et al.
2014/0293266 A1 10/2014 Hsu et al.
2014/0330479 A1 11/2014 Dolgov
2014/0376001 A1 12/2014 Swanson
2015/0109605 A1 4/2015 Major, Jr. et al.
2015/0131080 A1 5/2015 Retterath et al.
2015/0177368 A1 6/2015 Bayha et al.
2015/0185244 A1 7/2015 Inoue et al.
2015/0185313 A1 7/2015 Zhu
2015/0192676 A1 7/2015 Kotelnikov et al.
2015/0192677 A1 7/2015 Yu et al.
2015/0204978 A1 7/2015 Hammes et al.
2015/0214690 A1 7/2015 Savage-Leuchs et al.
2015/0260843 A1* 9/2015 Lewis G02B 26/108 356/5.01
2015/0301182 A1 10/2015 Geiger et al.
2015/0316415 A1 11/2015 Islam
2015/0323654 A1 11/2015 Jachmann et al.
2015/0378023 A1 12/2015 Royo Royo et al.
2015/0378241 A1 12/2015 Eldada
2016/0025842 A1 1/2016 Anderson et al.
2016/0047901 A1 2/2016 Pacala et al.
2016/0049765 A1 2/2016 Eldada
2016/0146939 A1 5/2016 Shpunt et al.
2016/0146940 A1 5/2016 Koehler
2016/0161600 A1 6/2016 Eldada et al.
2016/0245919 A1 8/2016 Kalscheur et al.

* cited by examiner

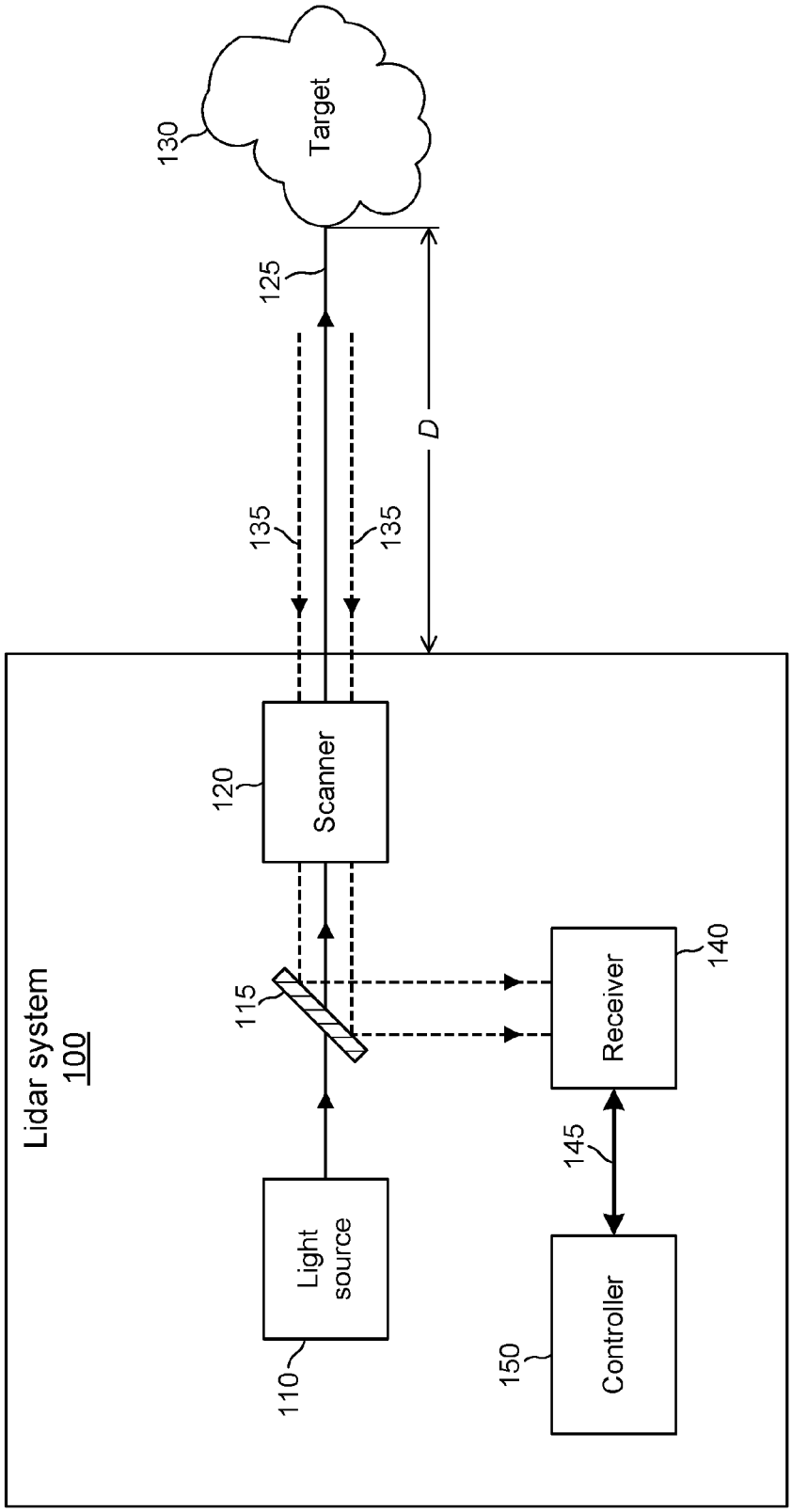
Lidar system
100
Light source
110
115
Scanner
120
Receiver
140
145
Controller
150
135
135
125
D
Target
130

Figure 1

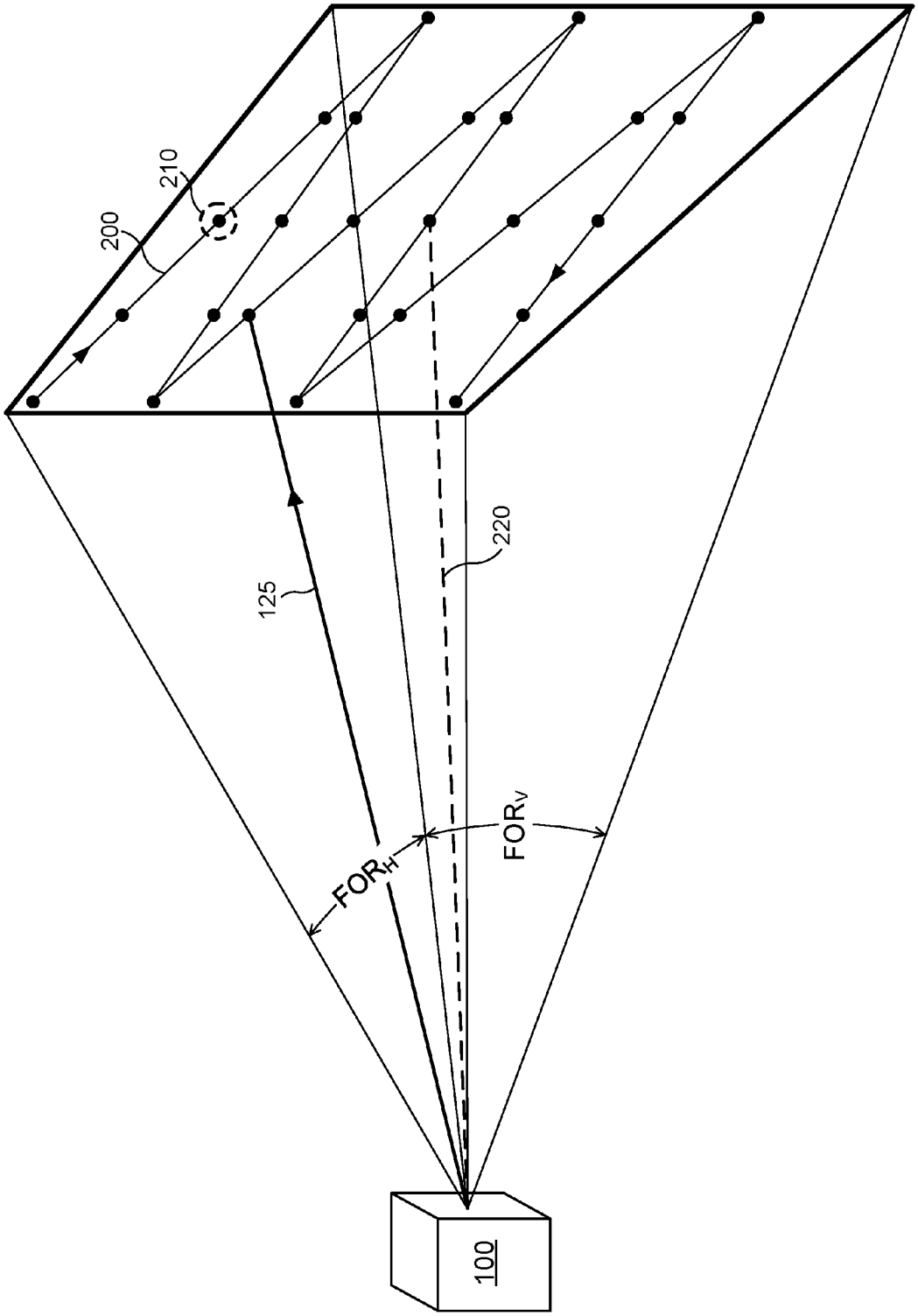

Figure 2

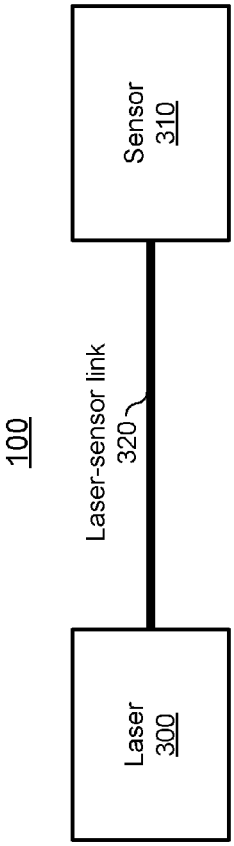

Figure 3

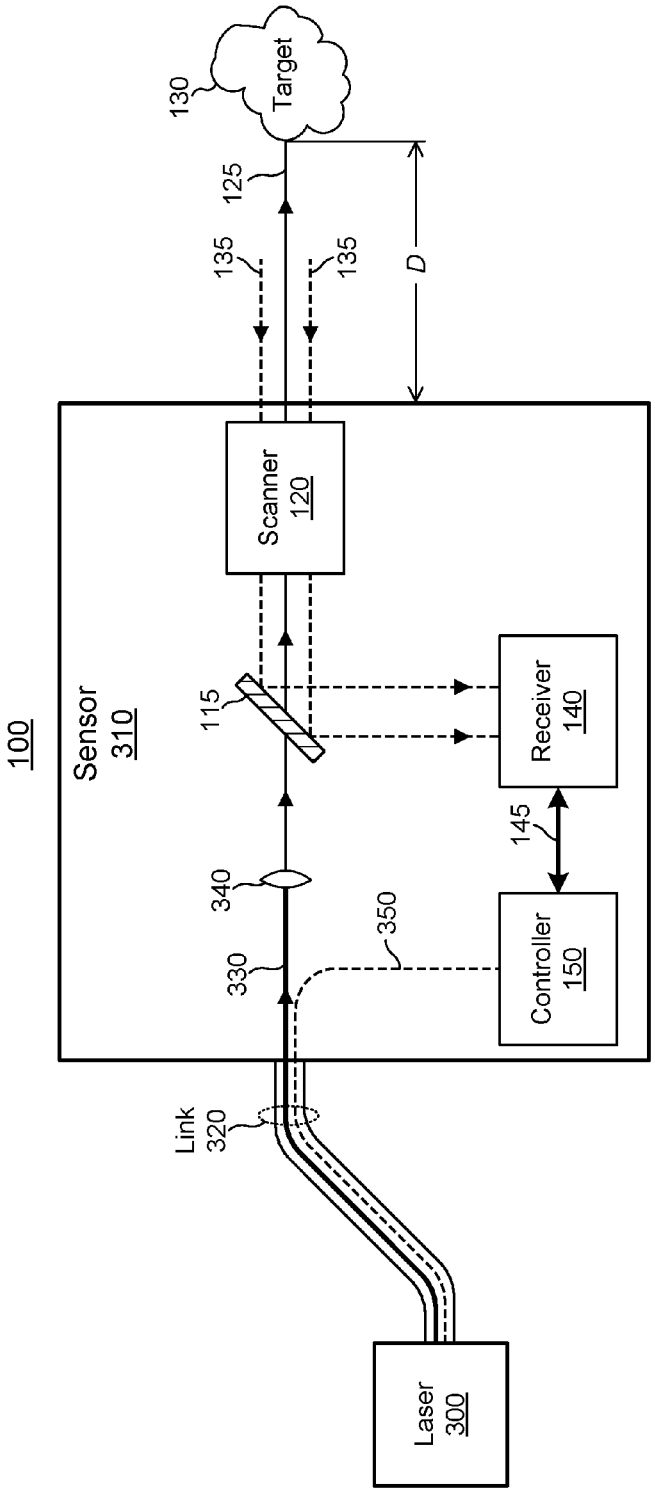

Figure 4

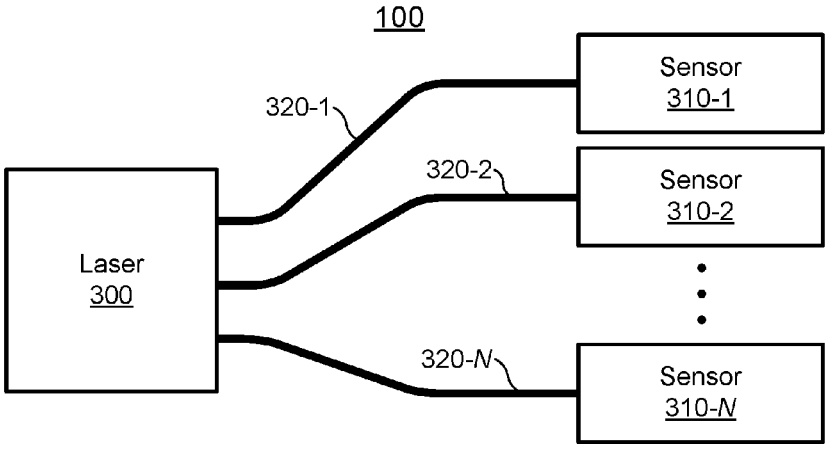

Figure 5

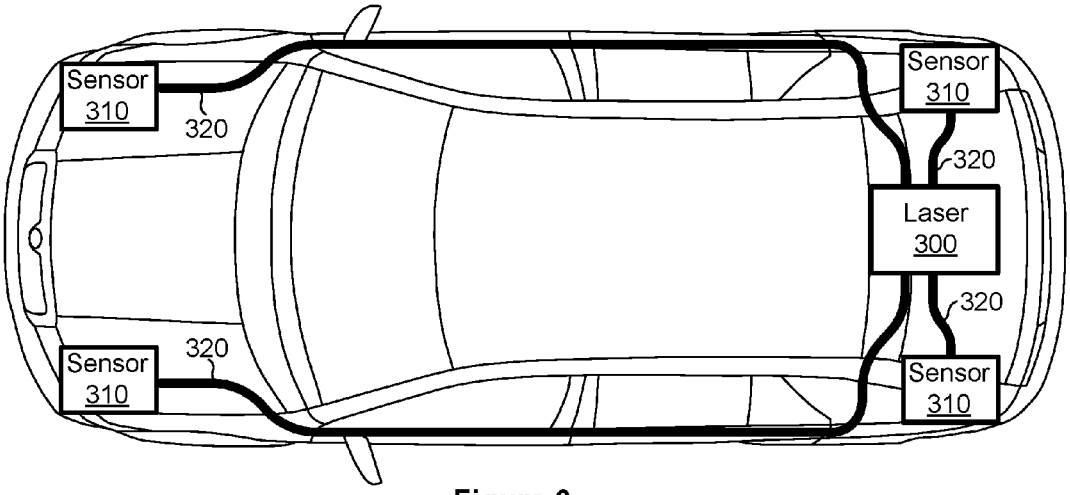

Figure 6

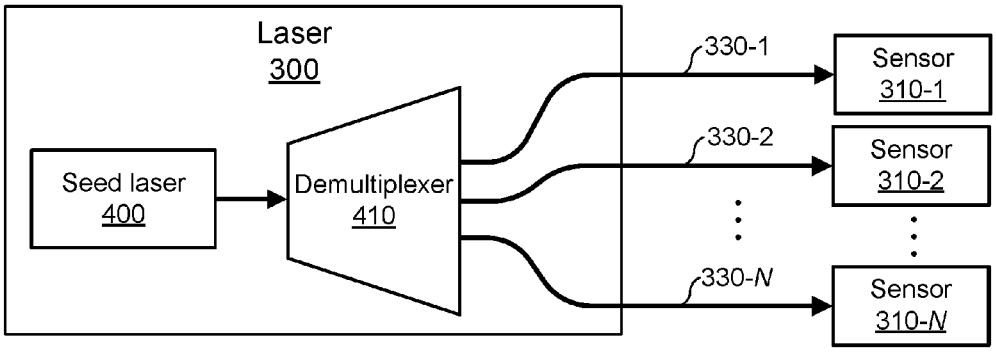

Figure 7

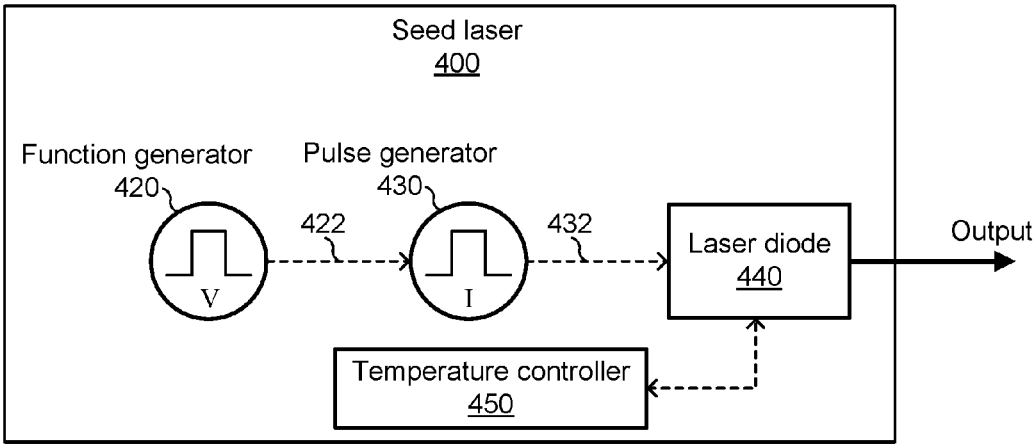

Figure 8

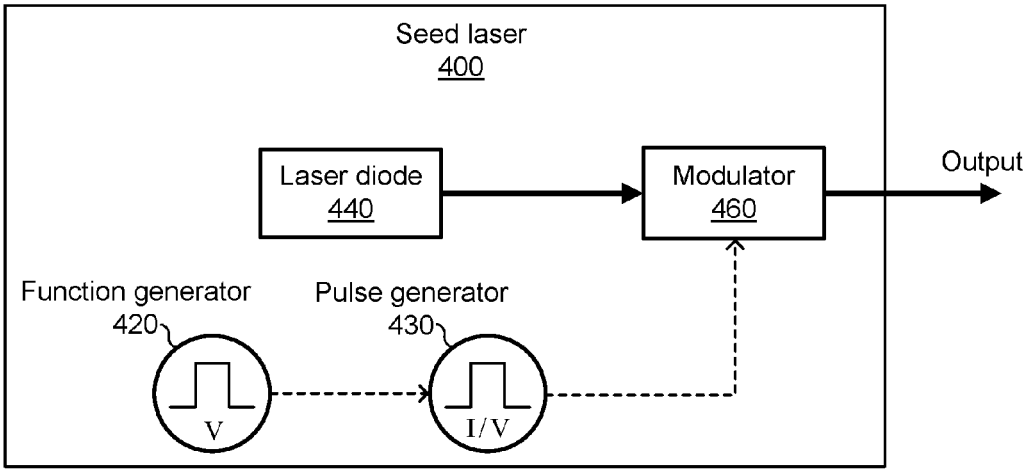

Figure 9

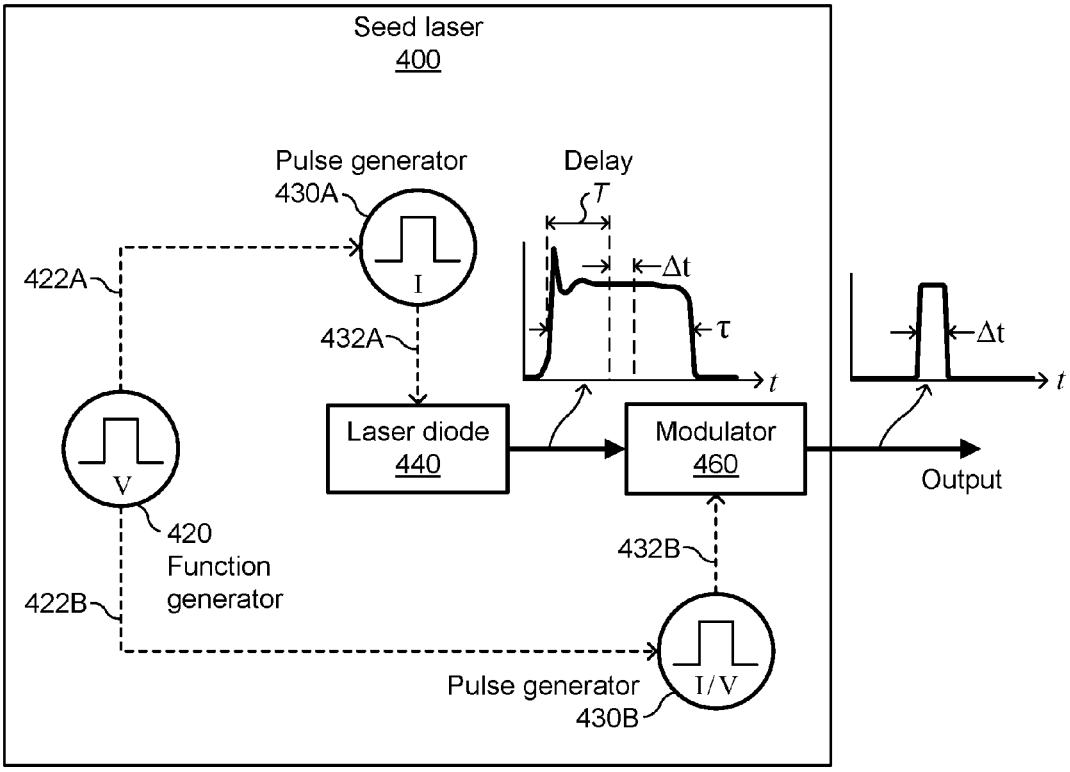

Figure 10

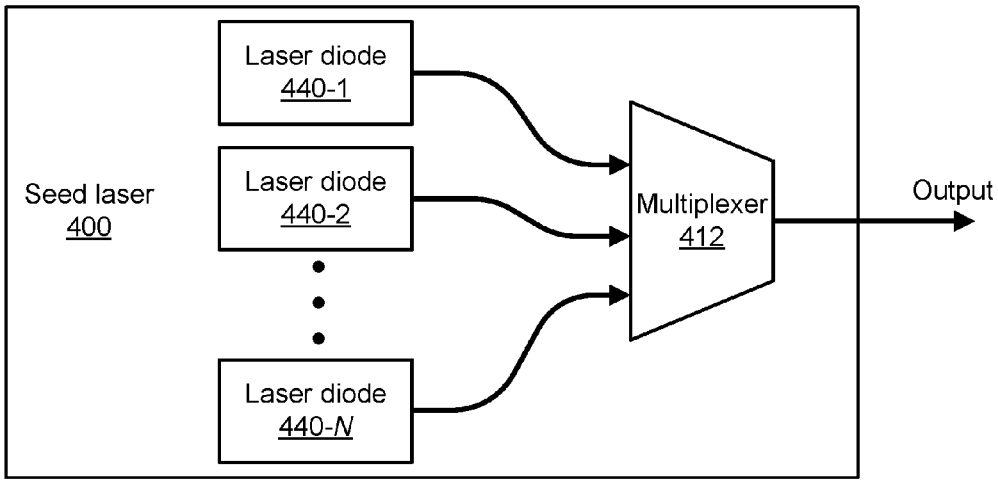

Figure 11

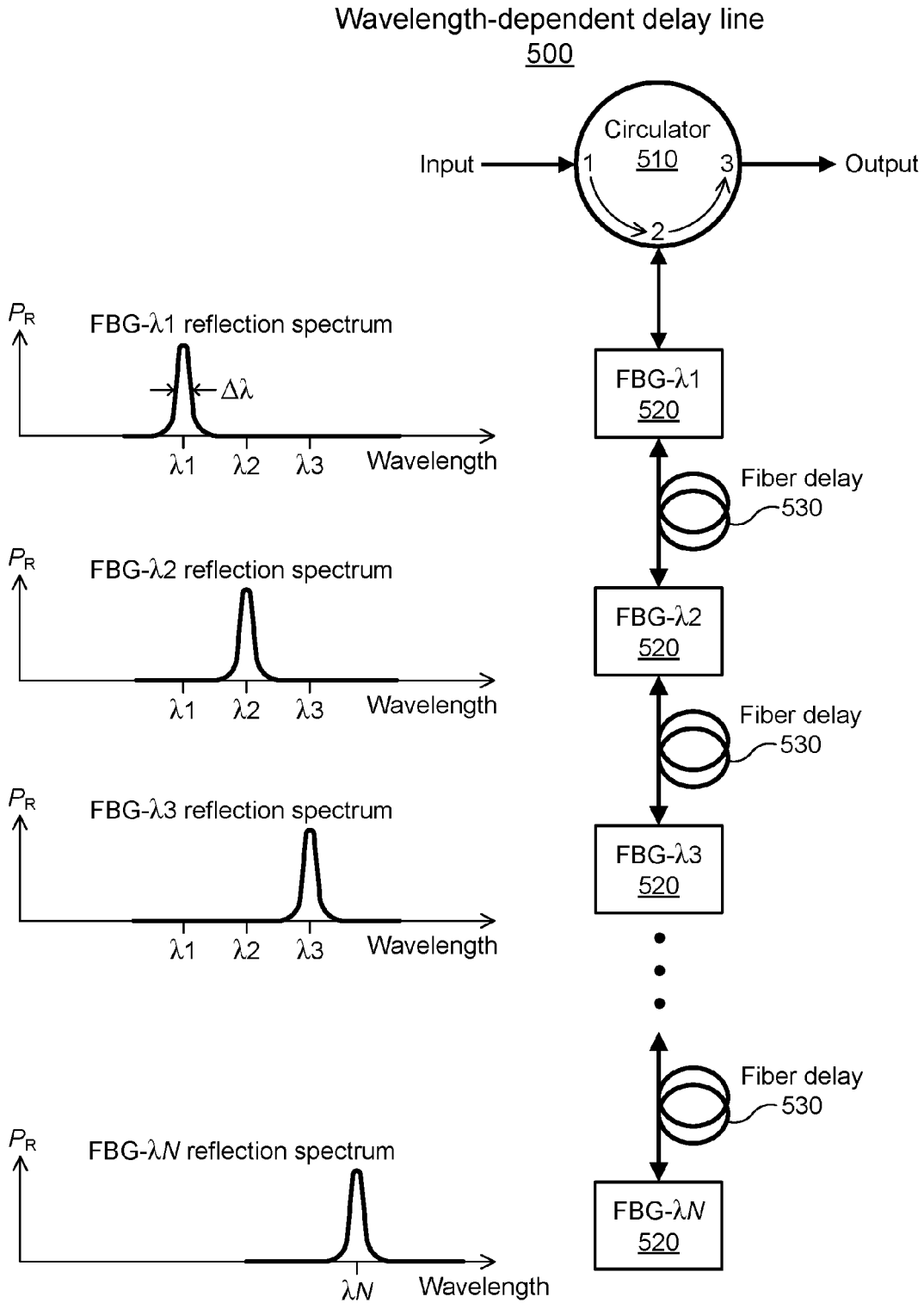
Wavelength-dependent delay line
500
Circulator
510
Input
Output
1
2
3
FBG-λ1
520
Fiber delay
530
FBG-λ2
520
Fiber delay
530
FBG-λ3
520
Fiber delay
530
FBG-λN
520
P_R
FBG-λ1 reflection spectrum
Δλ
λ1
λ2
λ3
Wavelength
FBG-λ2 reflection spectrum
FBG-λ3 reflection spectrum
FBG-λN reflection spectrum
λN

Figure 12

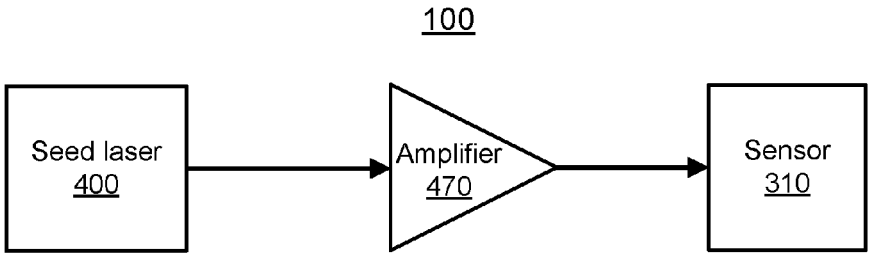

Figure 13

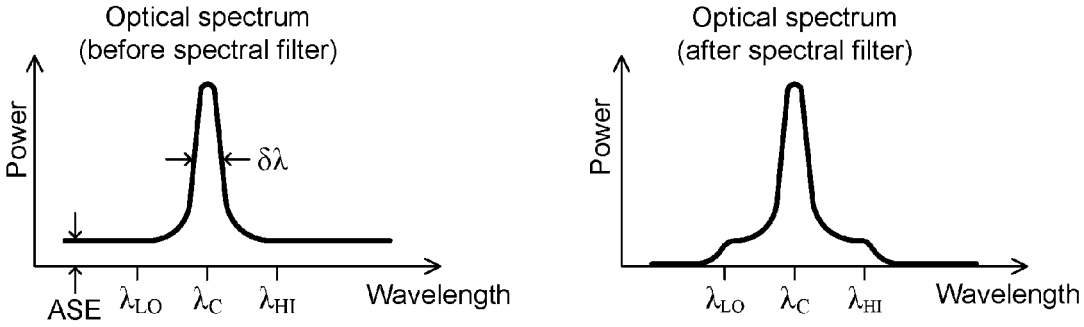

Figure 14

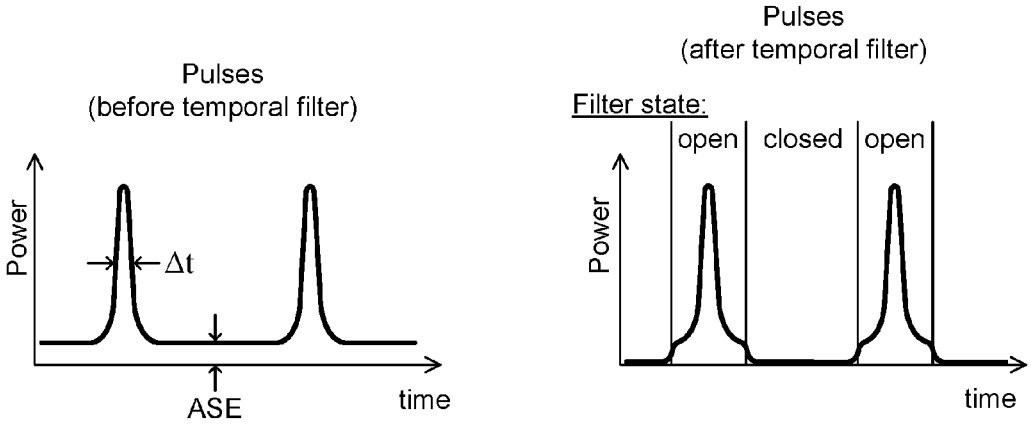

Figure 15

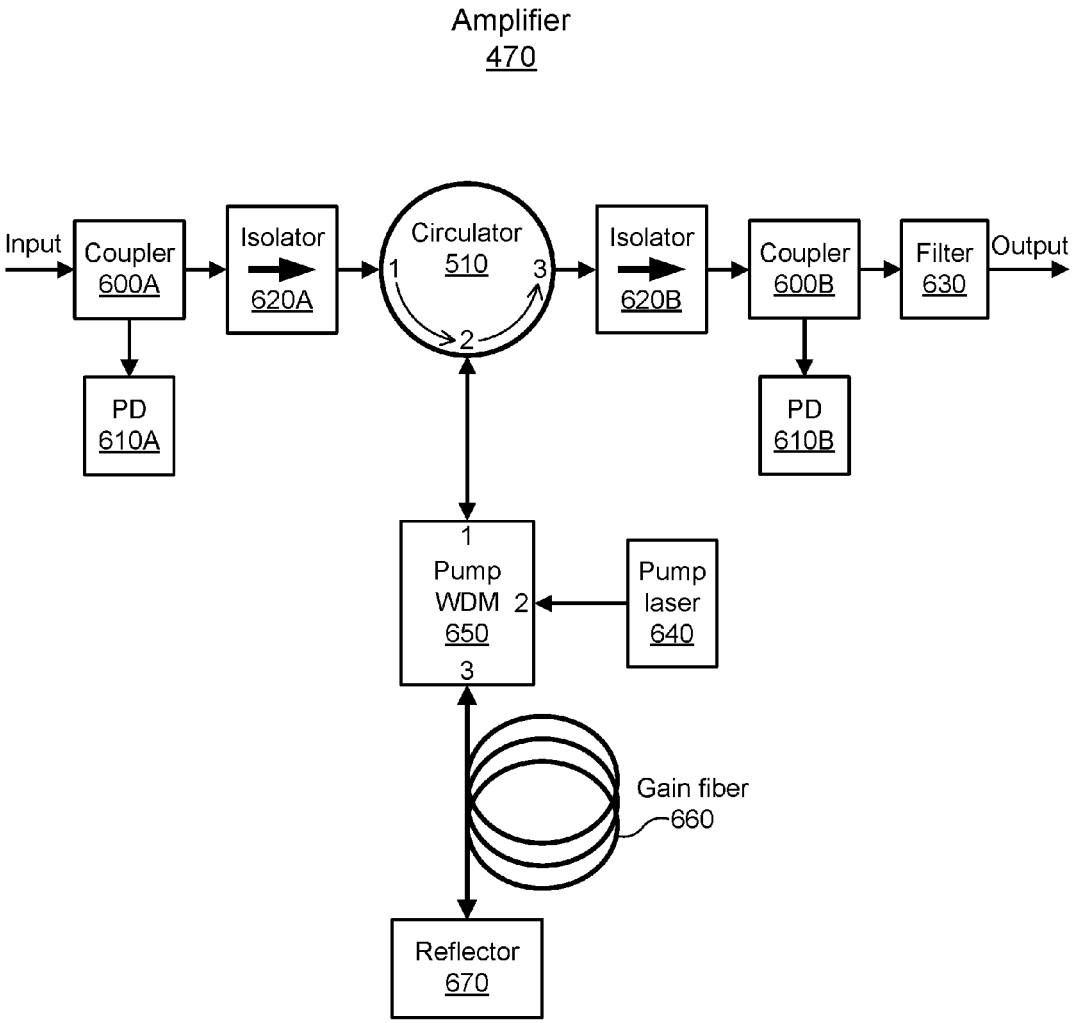
Amplifier
470
Input
Coupler
600A
Isolator
620A
Circulator
510
1
2
3
Isolator
620B
Coupler
600B
Filter
630
Output
PD
610A
PD
610B
1
Pump
WDM
650
2
3
Pump
laser
640
Gain fiber
660
Reflector
670

Figure 16

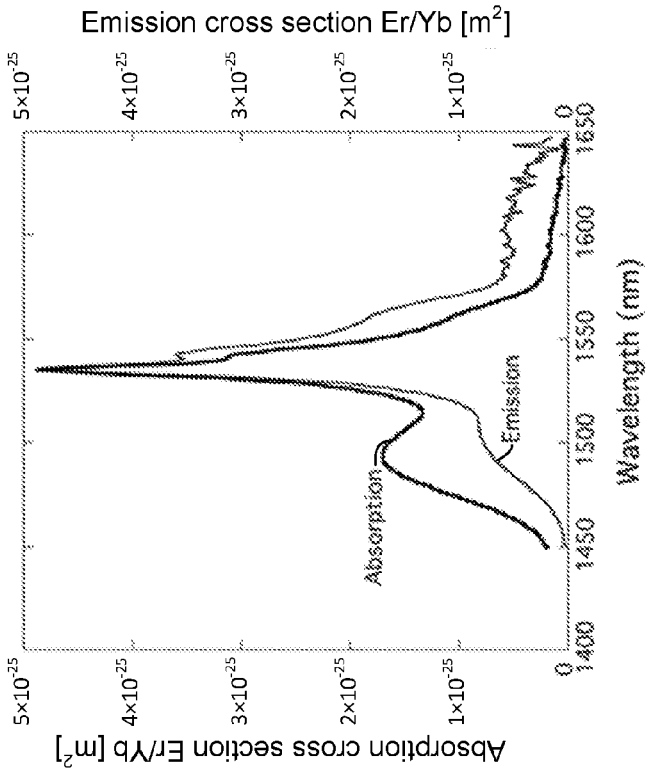

Figure 18

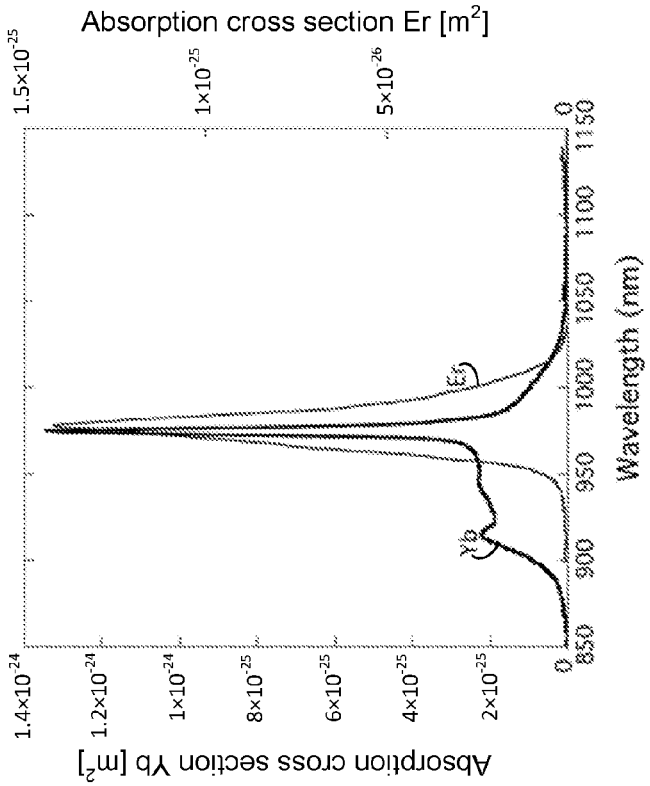

Figure 17

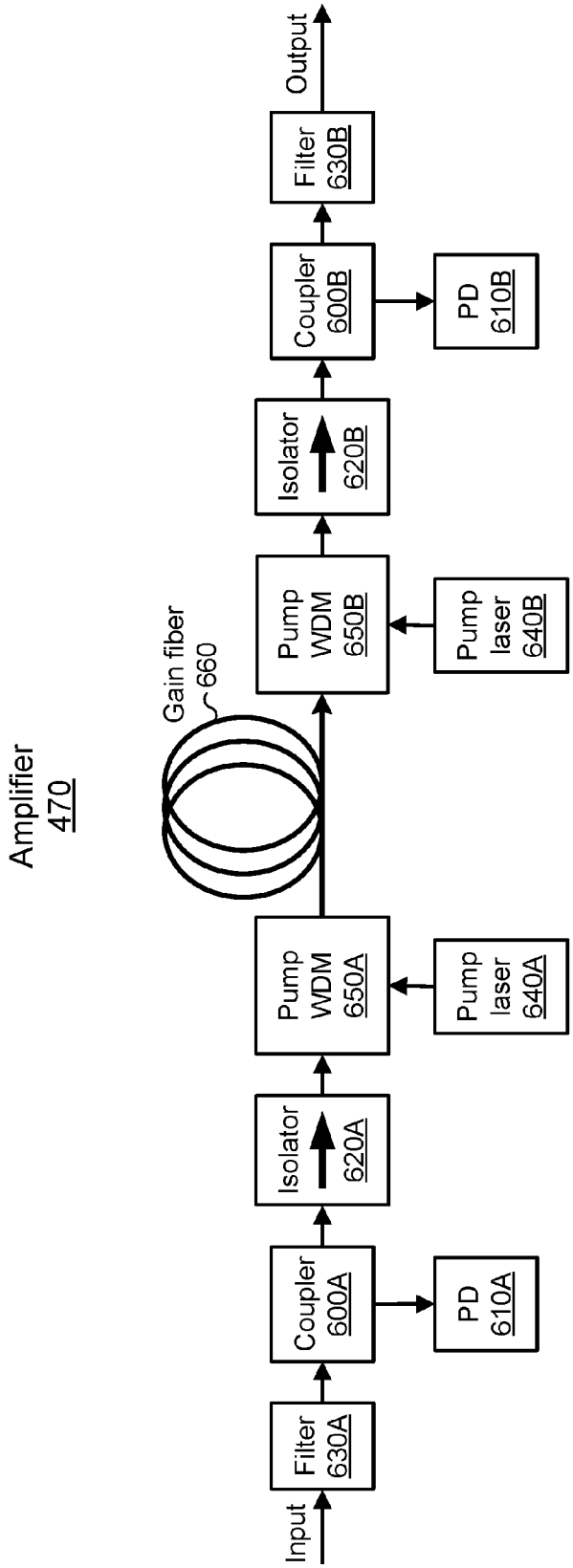
Amplifier
470
Input
Filter
630A
Coupler
600A
PD
610A
Isolator
620A
Pump
WDM
650A
Pump
laser
640A
Gain fiber
660
Pump
WDM
650B
Pump
laser
640B
Isolator
620B
Coupler
600B
PD
610B
Filter
630B
Output

Figure 19

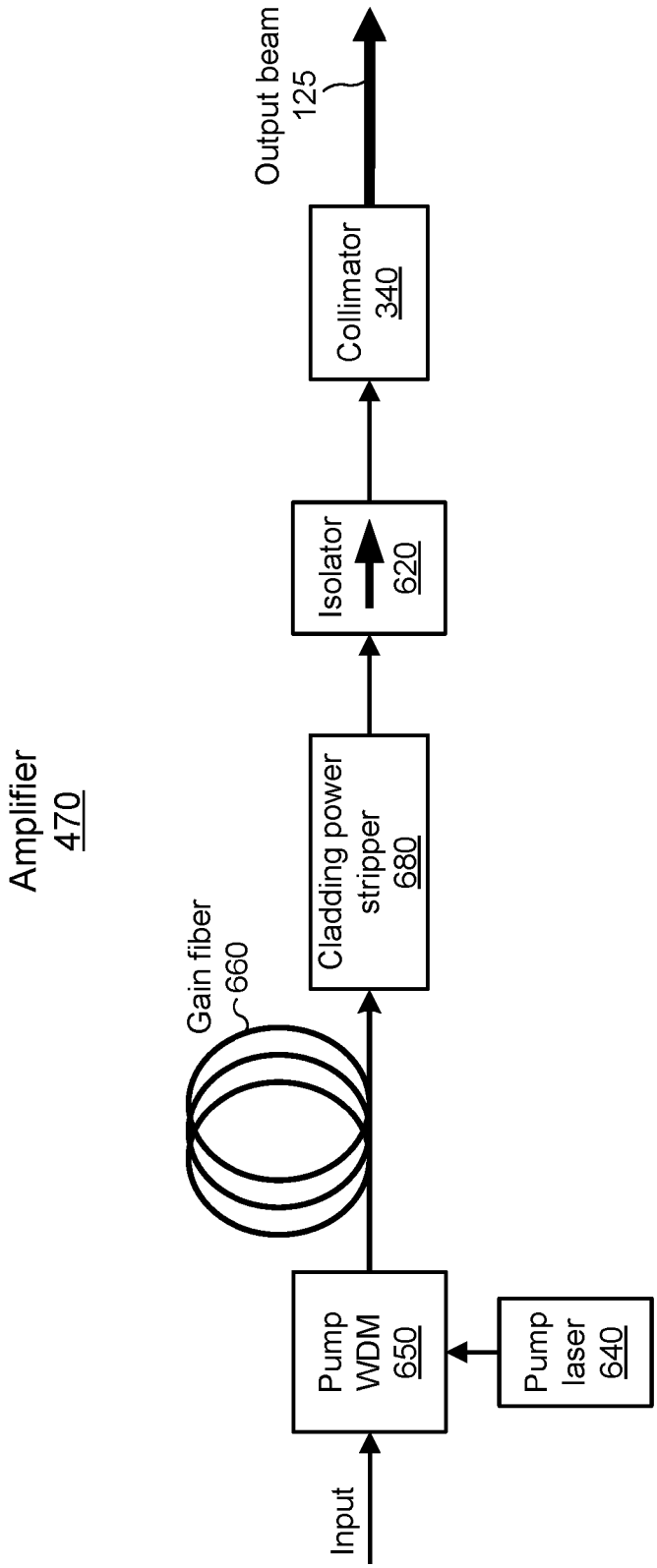
Amplifier
470
Input
Pump
WDM
650
Pump
laser
640
Gain fiber
660
Cladding power
stripper
680
Isolator
620
Collimator
340
Output beam
125

Figure 20

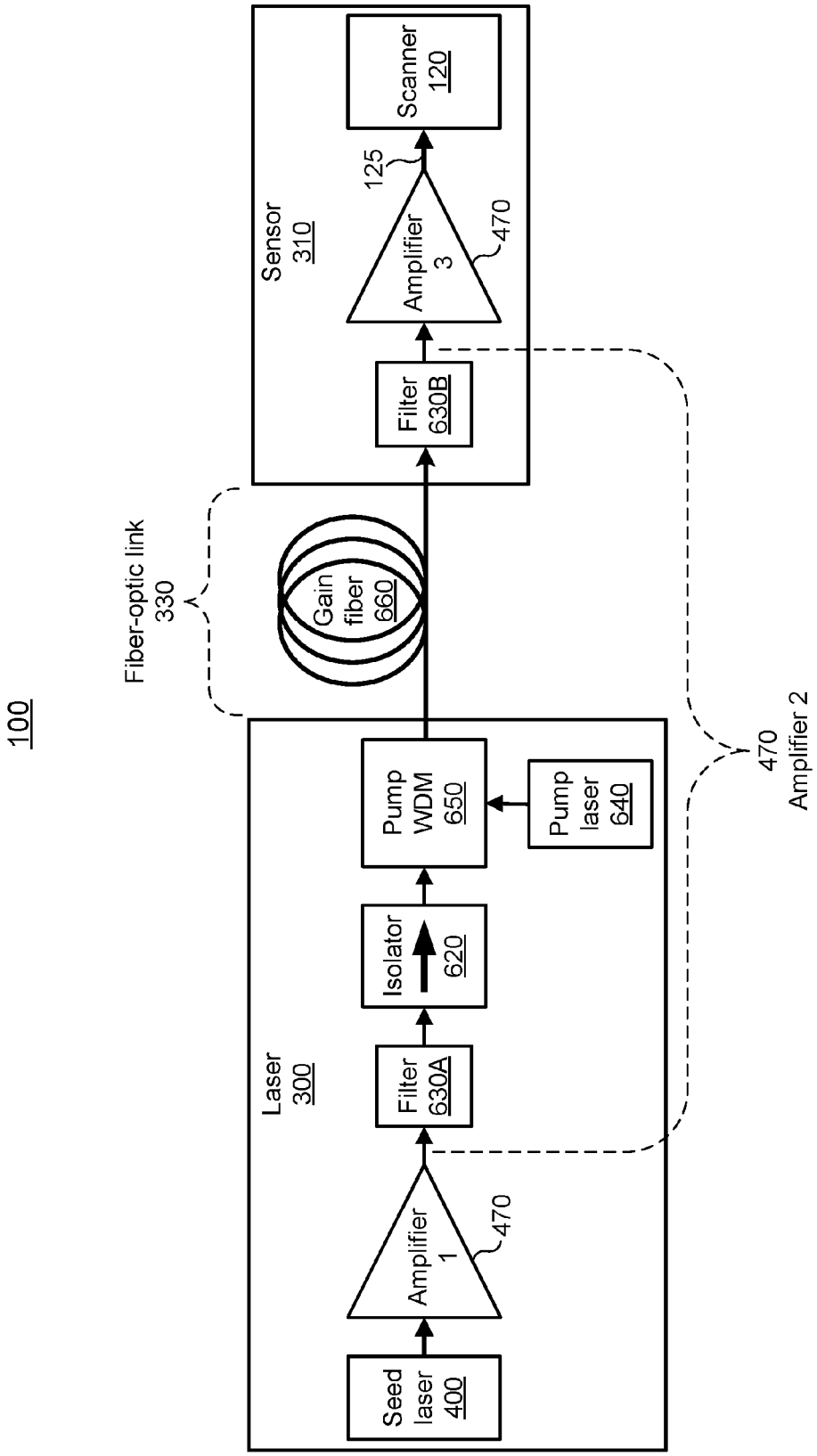
100
Fiber-optic link
330
Laser
300
Seed
laser
400
Amplifier
1
470
Filter
630A
Isolator
620
Pump
WDM
650
Pump
laser
640
Gain
fiber
660
Sensor
310
Filter
630B
Amplifier
3
470
125
Scanner
120
470
Amplifier 2

Figure 21

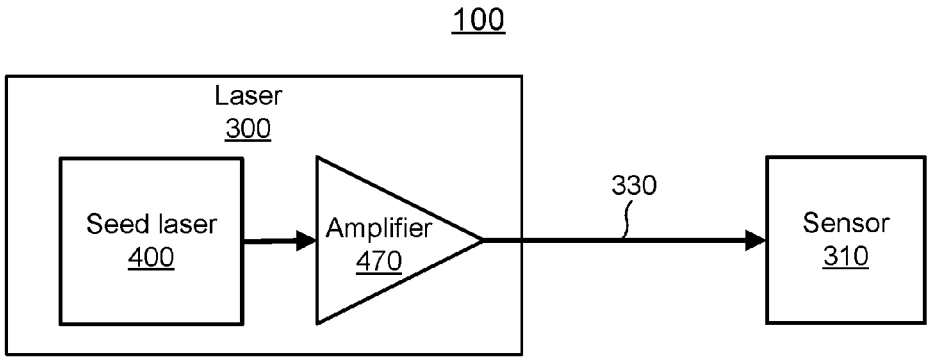

Figure 22

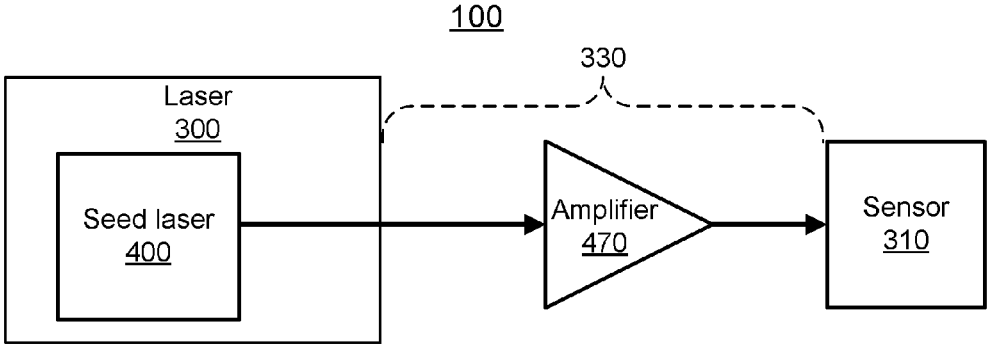

Figure 23

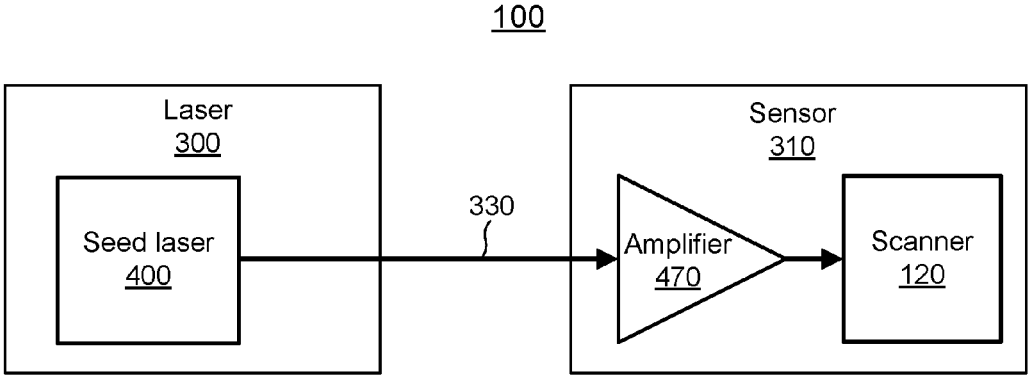

Figure 24

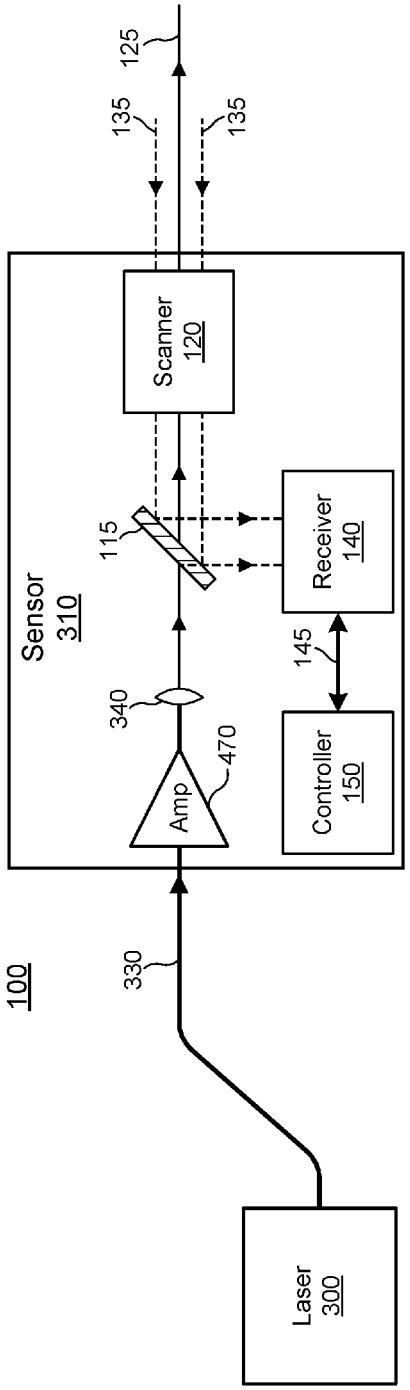

Figure 25

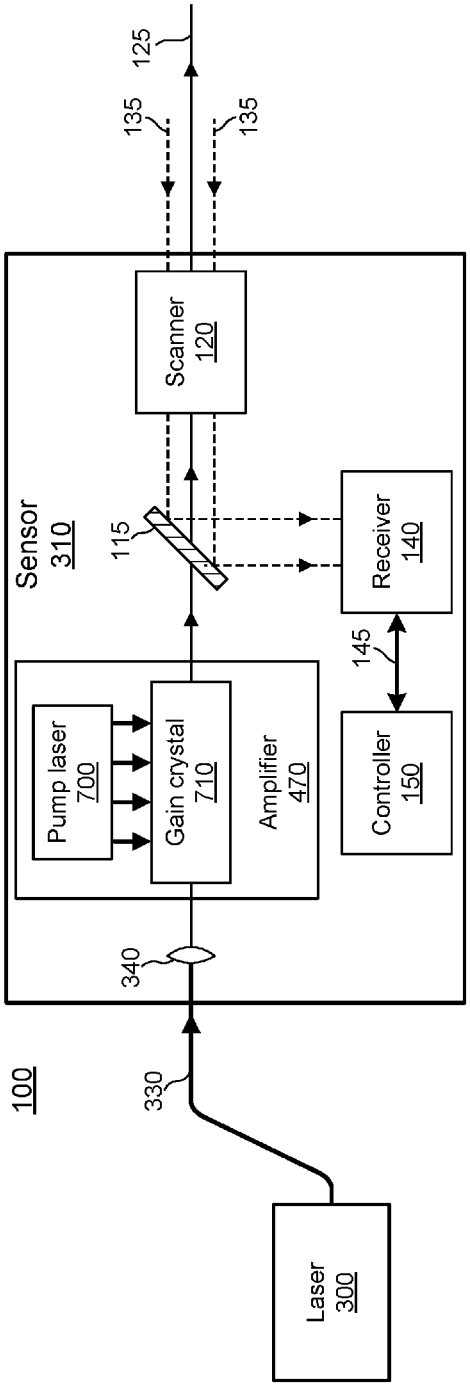

Figure 26

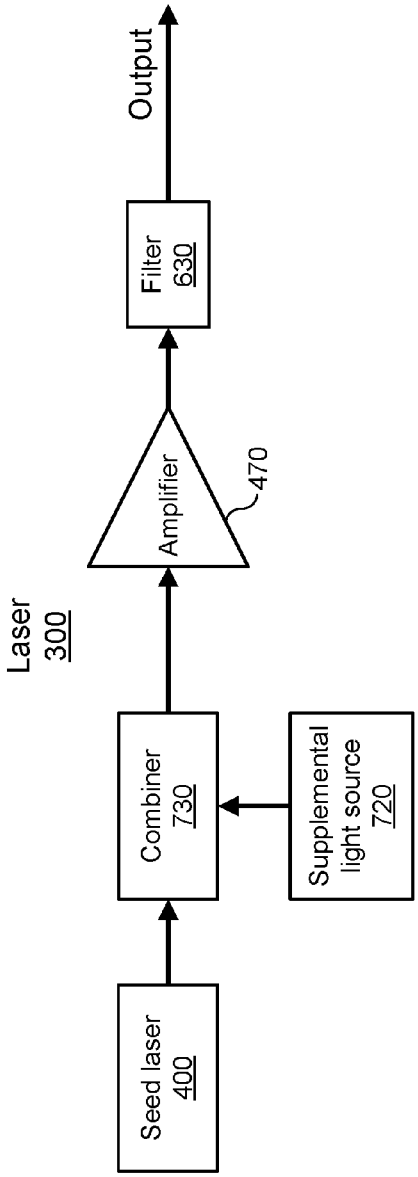

Figure 27

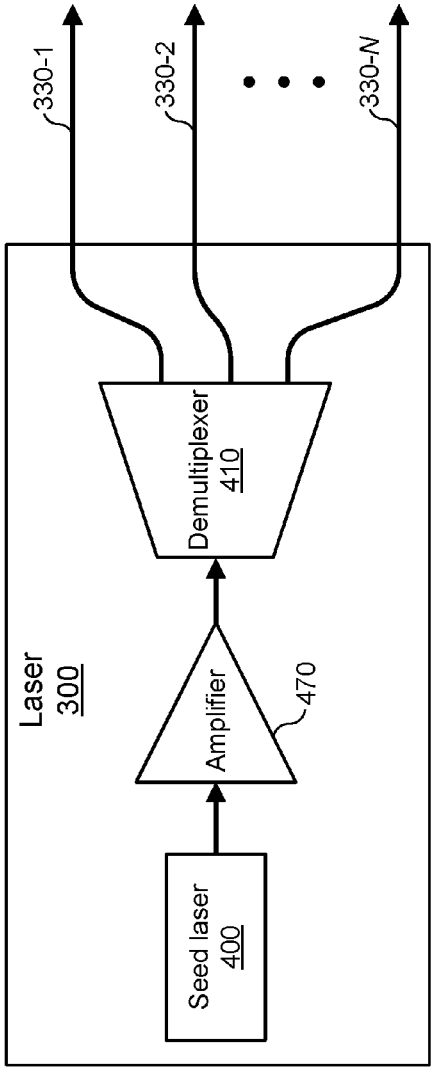

Figure 28

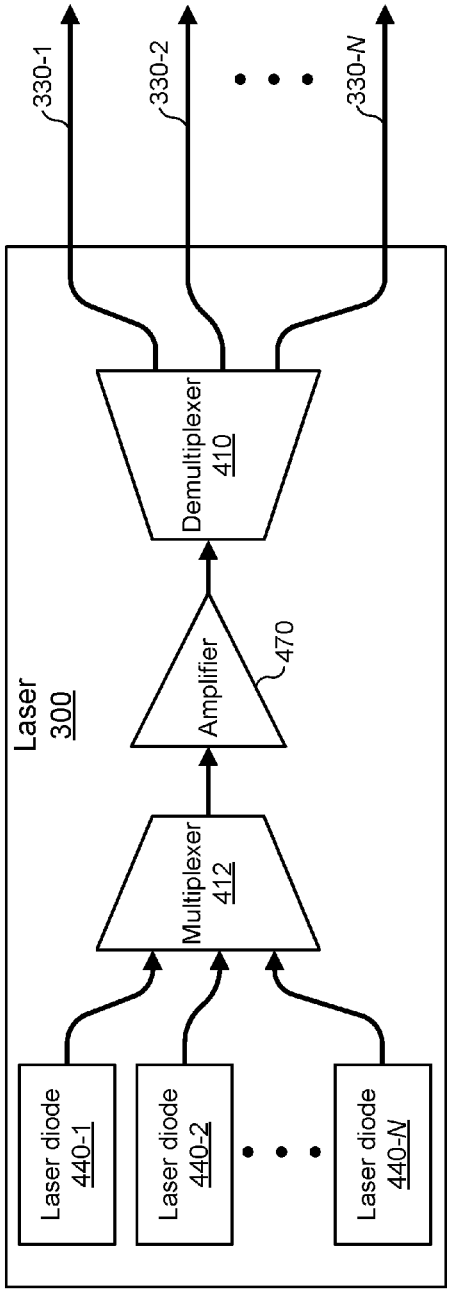

Figure 29

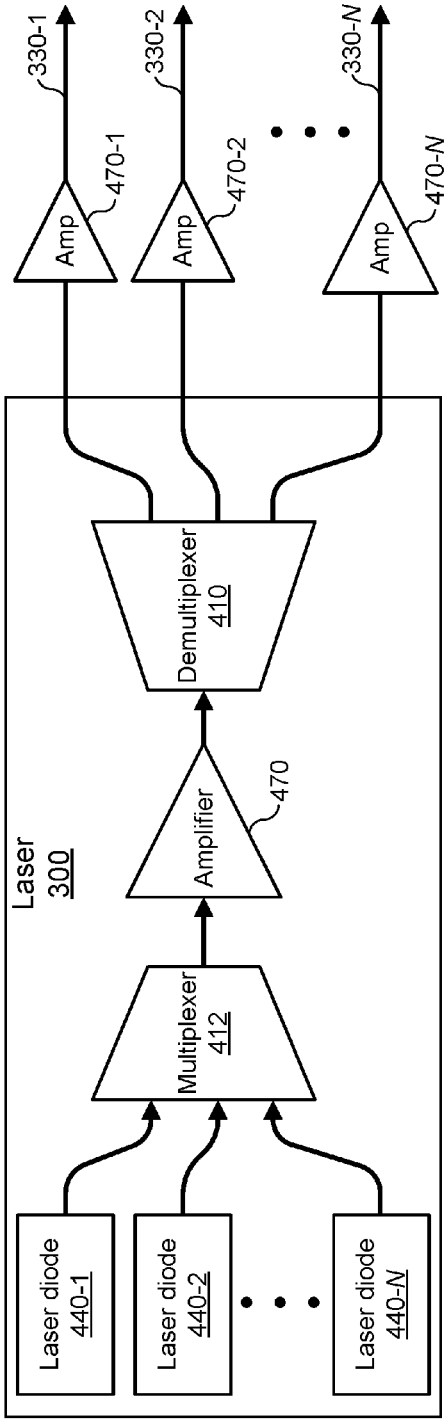

Figure 30

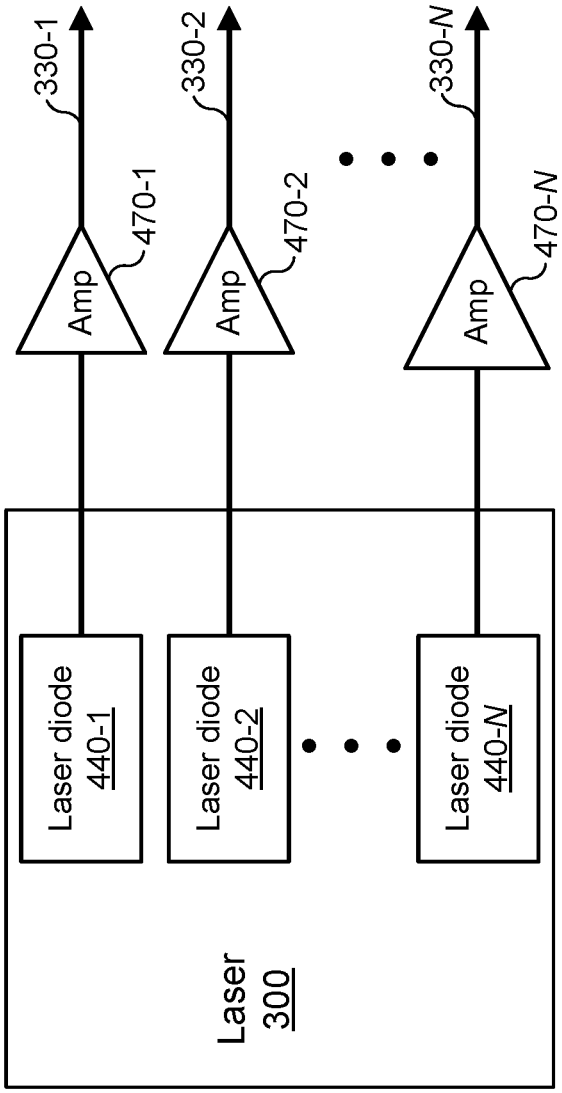
330-1
330-2
330-N
Amp
470-1
Amp
470-2
Amp
470-N
Laser diode
440-1
Laser diode
440-2
Laser diode
440-N
Laser
300

Figure 31

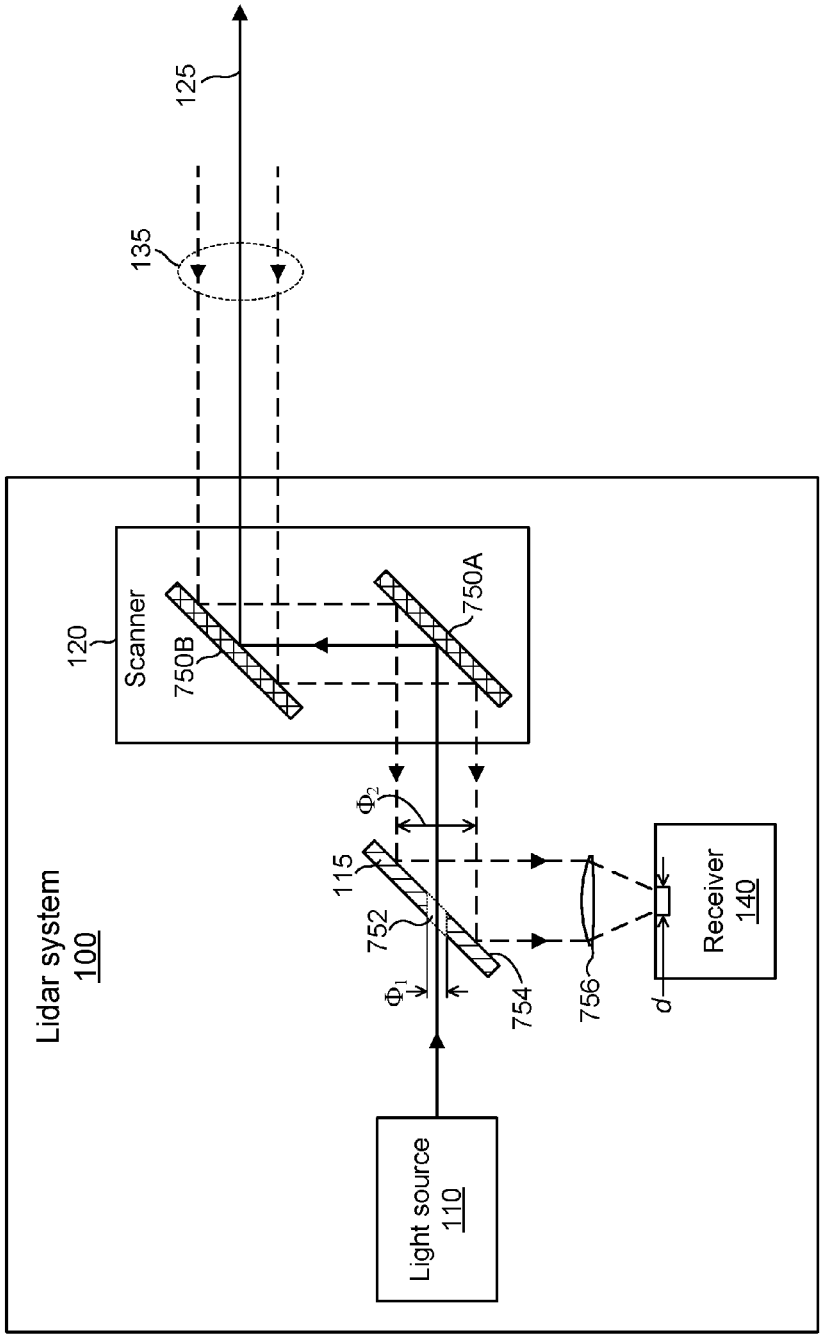
Lidar system
100
Light source
110
Scanner
120
750B
750A
115
752
754
756
Receiver
140
125
135
Φ_1
Φ_2
d

Figure 32

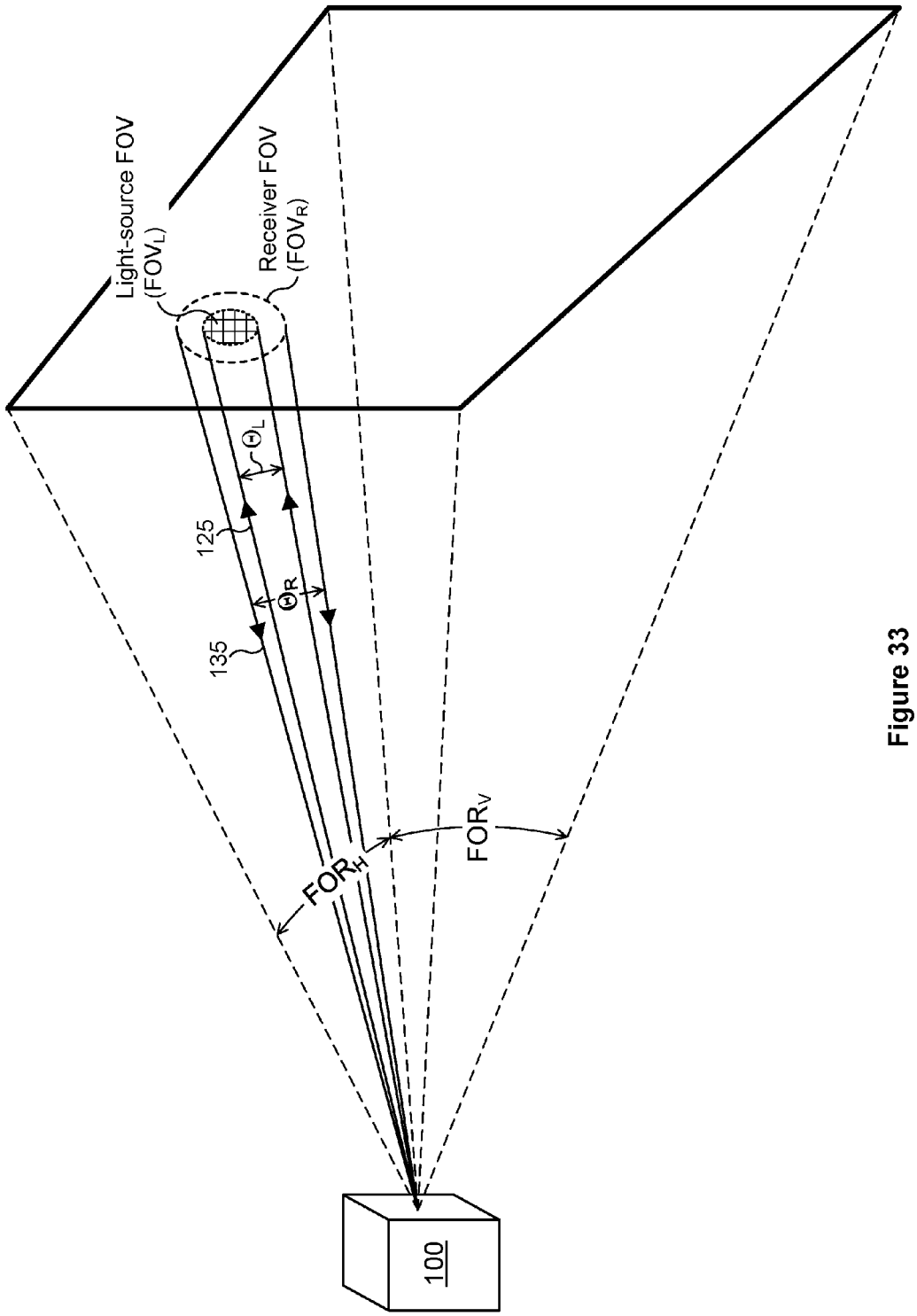
Light-source FOV
(FOV_L)
Receiver FOV
(FOV_R)
Θ_L
Θ_R
125
135
FOR_H
FOR_V
100

Figure 33

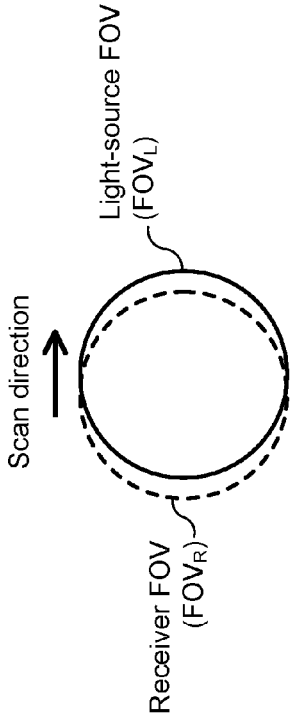

Figure 34

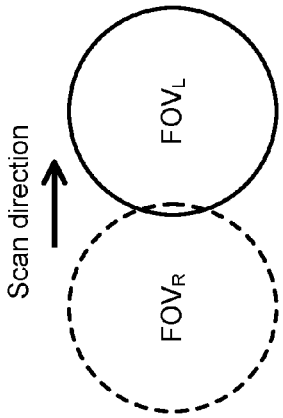

Figure 35

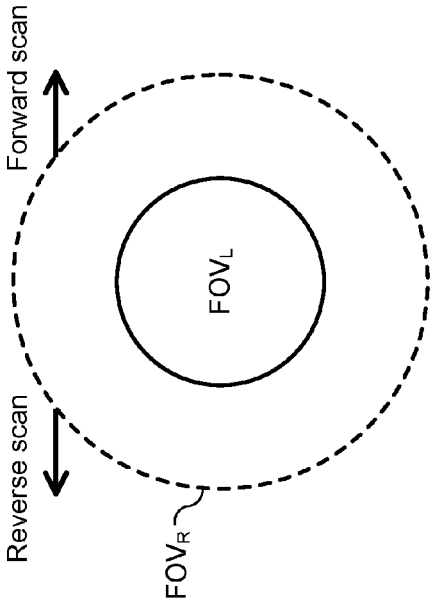

Figure 36

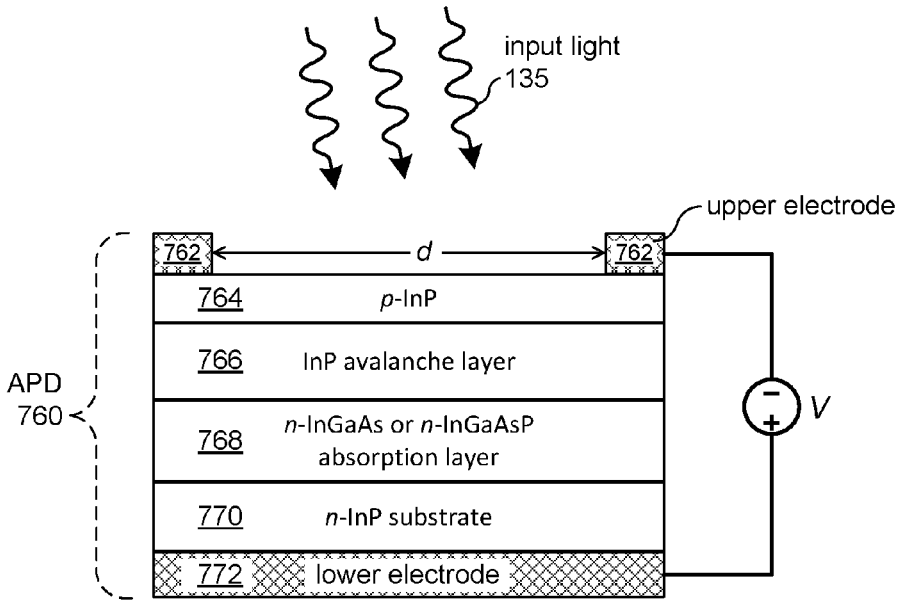

Figure 37

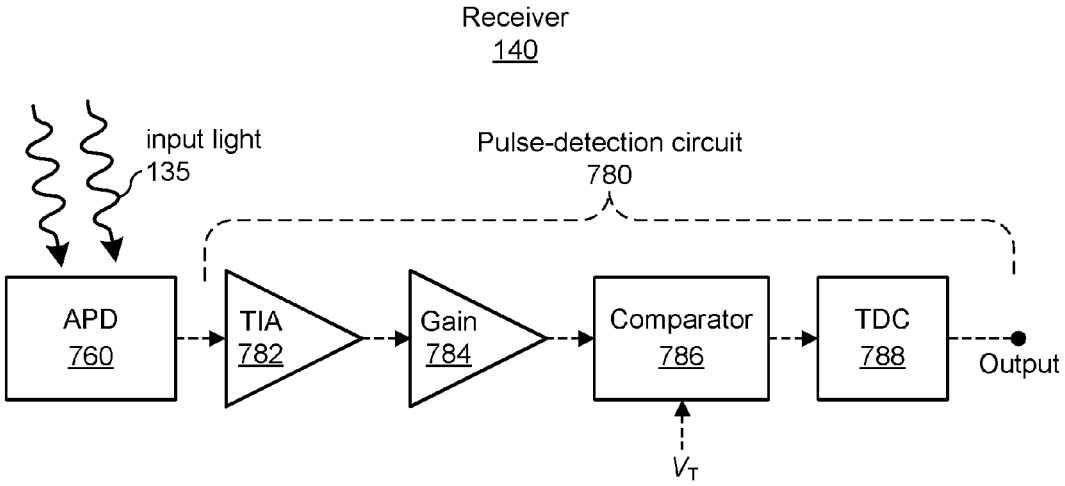

Figure 38

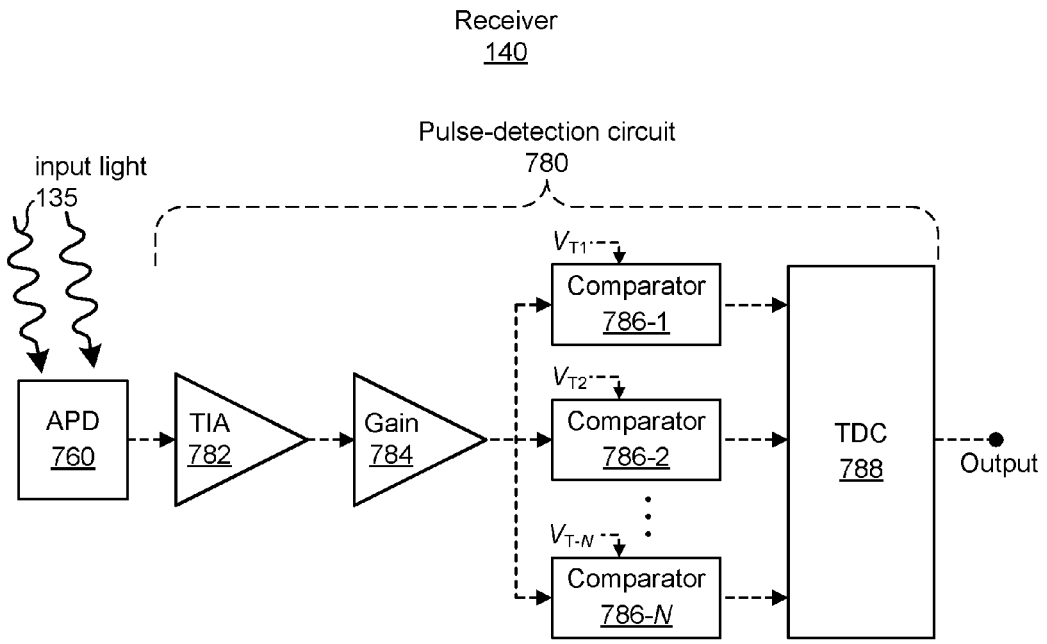

Figure 39

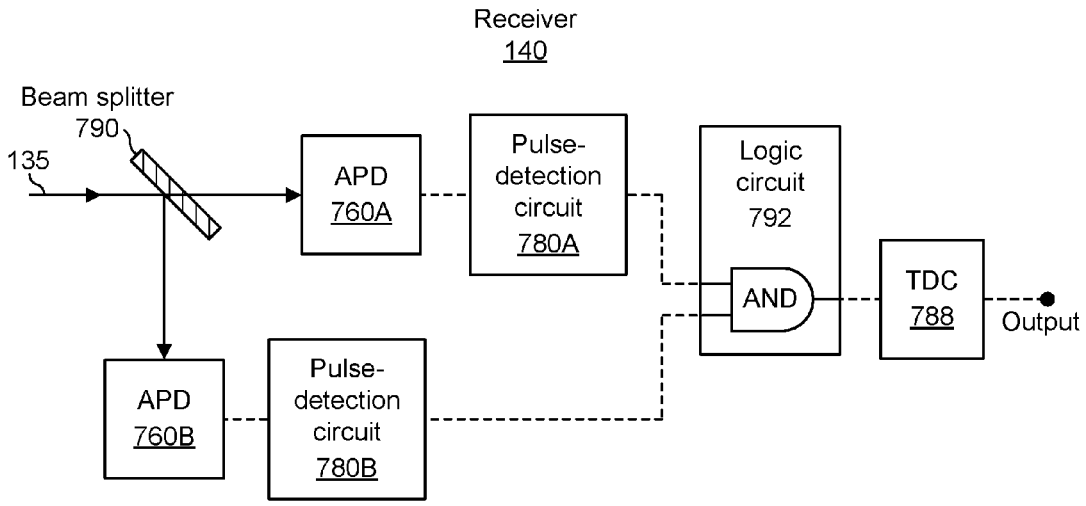

Figure 40

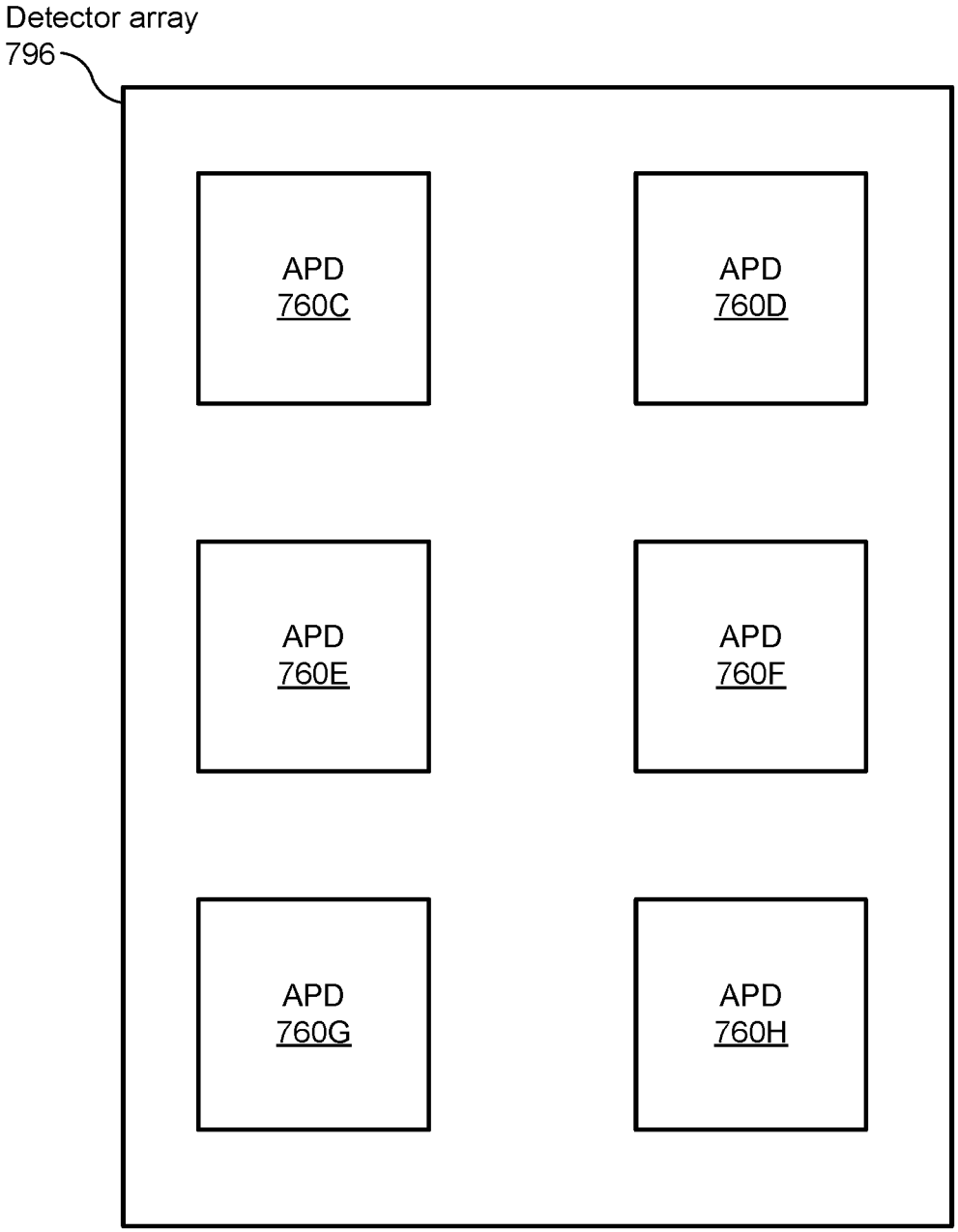
Detector array
796
APD
760C
APD
760D
APD
760E
APD
760F
APD
760G
APD
760H

Figure 41

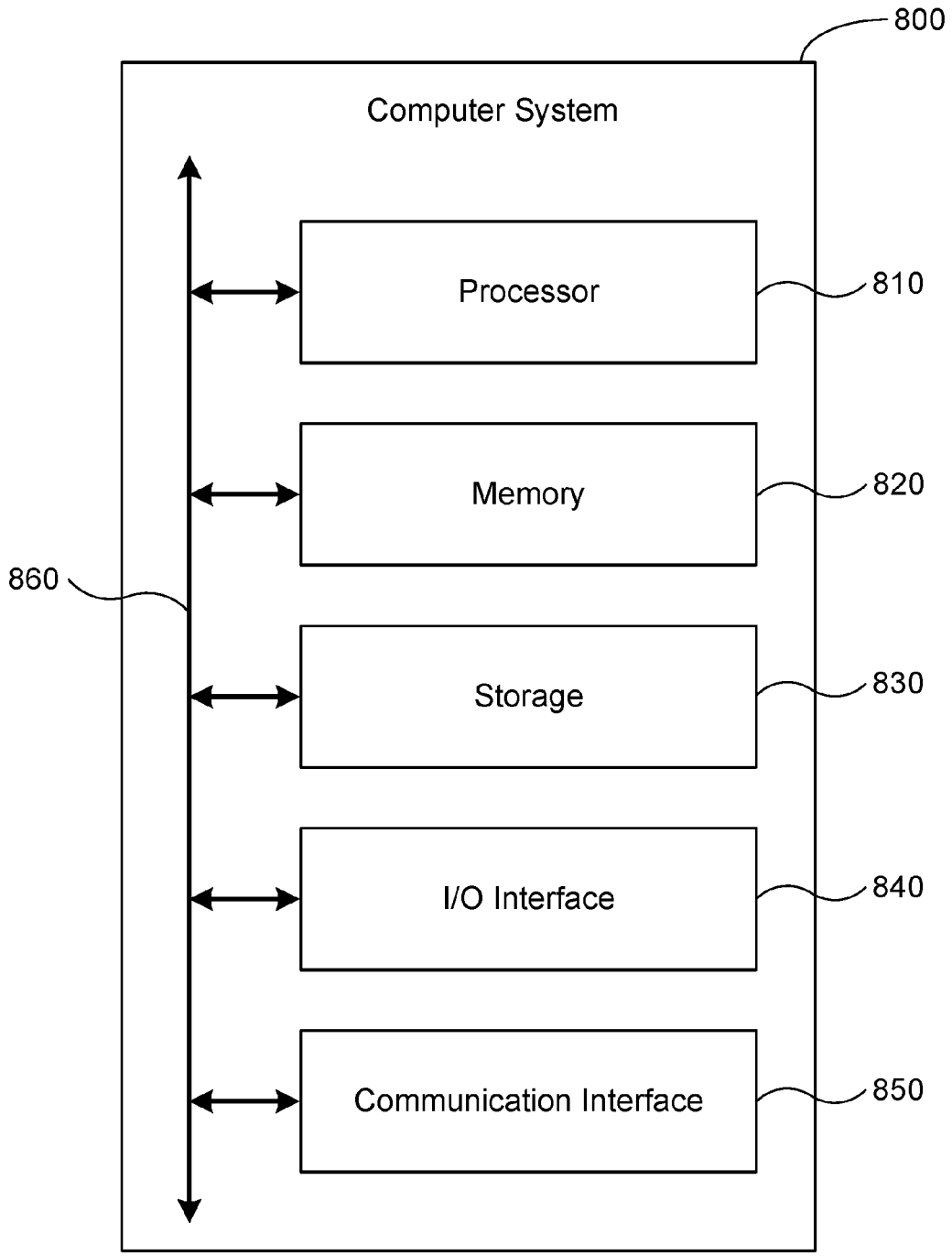
800
Computer System
Processor
810
Memory
820
860
Storage
830
I/O Interface
840
Communication Interface
850

Figure 42

LIDAR SYSTEM WITH DISTRIBUTED LASER AND MULTIPLE SENSOR HEADS

INCORPORATION BY REFERENCE TO ANY PRIORITY APPLICATIONS

Any and all applications for which a foreign or domestic priority claim is identified in the Application Data Sheet as filed with the present application are hereby incorporated by reference under 37 CFR 1.57. Namely, this application is a continuation of U.S. patent application Ser. No. 15/363,726, filed Nov. 29, 2016, and entitled "LIDAR SYSTEM WITH DISTRIBUTED LASER AND MULTIPLE SENSOR HEADS," which claims the benefit, under 35 U.S.C. §119(e), of U.S. Provisional Patent Application 62/261,214, filed Nov. 30, 2015, the entirety of each of which is incorporated herein by reference.

BACKGROUND

Field

This disclosure generally relates to lidar systems.

Description of the Related Art

Light detection and ranging (lidar) is a technology that can be used to measure distances to remote targets. Typically, a lidar system includes a light source and a detector. The light source can be, for example, a laser which emits light having a particular operating wavelength. The operating wavelength of a lidar system may lie, for example, in the infrared, visible, or ultraviolet portions of the electromagnetic spectrum. The light source emits light toward a target which then scatters the light. Some of the scattered light is received back at the detector. The system determines the distance to the target based on one or more characteristics associated with the returned light. For example, the system may determine the distance to the target based on the time of flight of a returned light pulse.

SUMMARY

In some embodiments, a lidar system comprises: a light source configured to emit pulses of light; a plurality of optical links, wherein each optical link couples the light source to a corresponding sensor head of a plurality of sensor heads, wherein the optical link is configured to convey at least a portion of the emitted pulses of light from the light source to the corresponding sensor head; and the plurality of sensor heads, wherein each sensor head comprises: a scanner configured to scan pulses of light across a field of regard of the sensor head, wherein the scanned pulses of light comprise the portion of the emitted pulses of light conveyed from the light source to the sensor head by the corresponding optical link; and a receiver configured to detect at least a portion of the scanned pulses of light scattered or reflected by a target located downrange from the sensor head.

BRIEF DESCRIPTION OF THE DRAWINGS

FIG. **1** illustrates an example light detection and ranging (lidar) system.

FIG. **2** illustrates an example scan pattern produced by a lidar system.

FIG. **3** illustrates an example lidar system that includes a laser, sensor, and laser-sensor link.

FIG. **4** illustrates an example lidar system where the laser-sensor link includes an optical link and an electrical link coupled between the laser and sensor.

FIG. **5** illustrates an example lidar system with a laser coupled to multiple sensor heads by multiple respective laser-sensor links.

FIG. **6** illustrates an example vehicle with a lidar system that includes a laser with multiple sensor heads coupled to the laser by multiple laser-sensor links.

FIG. **7** illustrates an example laser with a seed laser and a demultiplexer that distributes light from the seed laser to multiple optical links.

FIG. **8** illustrates an example seed laser that includes a laser diode driven by a pulse generator.

FIG. **9** illustrates an example seed laser that includes a laser diode and an optical modulator.

FIG. **10** illustrates an example seed laser that includes a laser diode driven by a pulse generator and an optical modulator driven by another pulse generator.

FIG. **11** illustrates an example seed laser with multiple laser diodes that are combined together by a multiplexer.

FIG. **12** illustrates an example wavelength-dependent delay line.

FIG. **13** illustrates an example lidar system that includes a seed laser, amplifier, and sensor.

FIG. **14** illustrates an example spectrum of an optical signal before and after passing through a spectral filter.

FIG. **15** illustrates example optical pulses before and after the pulses pass through a temporal filter.

FIG. **16** illustrates an example double-pass fiber-optic amplifier.

FIG. **17** illustrates example absorption spectra for erbium and ytterbium ions incorporated into a glass host (e.g., fused silica).

FIG. **18** illustrates example absorption and emission spectra for a glass host doped with a combination of erbium and ytterbium.

FIG. **19** illustrates an example single-pass fiber-optic amplifier.

FIG. **20** illustrates an example booster amplifier that produces a free-space output beam.

FIG. **21** illustrates an example lidar system that includes three amplifiers.

FIG. **22** illustrates an example lidar system with a laser that includes a seed laser and an amplifier.

FIG. **23** illustrates an example lidar system with an optical link that includes an amplifier.

FIG. **24** illustrates an example lidar system with a sensor head that includes an amplifier.

FIG. **25** illustrates an example lidar system where the sensor head includes an amplifier coupled to an output collimator.

FIG. **26** illustrates an example lidar system where the sensor head includes a free-space amplifier.

FIG. **27** illustrates an example laser where the seed laser is combined with a supplemental light source.

FIG. **28** illustrates an example laser that includes a seed laser, amplifier, and demultiplexer.

FIG. **29** illustrates an example laser that includes multiple laser diodes, a multiplexer, an amplifier, and a demultiplexer.

FIG. **30** illustrates an example laser where the laser is coupled to multiple optical links that each include an amplifier.

FIG. **31** illustrates an example laser with multiple laser diodes coupled to multiple respective optical links that each include an amplifier.

FIG. **32** illustrates an example lidar system with an example overlap mirror.

FIG. **33** illustrates an example light-source field of view and receiver field of view for a lidar system.

FIG. **34** illustrates an example light-source field of view and receiver field of view with a corresponding scan direction.

FIG. **35** illustrates an example receiver field of view that is offset from a light-source field of view.

FIG. **36** illustrates an example forward-scan direction and reverse-scan direction for a light-source field of view and a receiver field of view.

FIG. **37** illustrates an example InGaAs avalanche photodiode (APD).

FIG. **38** illustrates an APD coupled to an example pulse-detection circuit.

FIG. **39** illustrates an APD coupled to an example multi-channel pulse-detection circuit.

FIG. **40** illustrates an example receiver that includes two APDs coupled to a logic circuit.

FIG. **41** illustrates an example detector array.

FIG. **42** illustrates an example computer system.

DETAILED DESCRIPTION

FIG. **1** illustrates an example light detection and ranging (lidar) system **100**. In particular embodiments, a lidar system **100** may be referred to as a laser ranging system, a laser radar system, a LIDAR system, or a laser detection and ranging (LADAR or ladar) system. In particular embodiments, a lidar system **100** may include a light source **110**, mirror **115**, scanner **120**, receiver **140**, or controller **150**. The light source **110** may be, for example, a laser which emits light having a particular operating wavelength in the infrared, visible, or ultraviolet portions of the electromagnetic spectrum. As an example, light source **110** may include a laser with an operating wavelength between approximately 1.2 μm and 1.7 μm. The light source **110** emits an output beam of light **125** which may be continuous-wave, pulsed, or modulated in any suitable manner for a given application. The output beam of light **125** is directed downrange toward a remote target **130**. As an example, the remote target **130** may be located a distance D of approximately 1 m to 1 km from the lidar system **100**.

Once the output beam **125** reaches the downrange target **130**, the target may scatter or reflect at least a portion of light from the output beam **125**, and some of the scattered or reflected light may return toward the lidar system **100**. In the example of FIG. **1**, the scattered or reflected light is represented by input beam **135**, which passes through scanner **120** and is directed by mirror **115** to receiver **140**. In particular embodiments, a relatively small fraction of the light from output beam **125** may return to the lidar system **100** as input beam **135**. As an example, the ratio of input beam **135** average power, peak power, or pulse energy to output beam **125** average power, peak power, or pulse energy may be approximately 10^{-1}, 10^{-2}, 10^{-3}, 10^{-4}, 10^{-5}, 10^{-6}, 10^{-7}, 10^{-8}, 10^{-9}, 10^{-10}, 10^{-11}, or 10^{-12}. As another example, if a pulse of output beam **125** has a pulse energy of 1 microjoule (μJ), then the pulse energy of a corresponding pulse of input beam **135** may have a pulse energy of approximately 10 nanojoules (nJ), 1 nJ, 100 picojoules (pJ), 10 pJ, 1 pJ, 100 femtojoules (fJ), 10 fJ, 1 fJ, 100 attojoules (aJ), 10 aJ, or 1 aJ. In particular embodiments, output beam **125** may be referred to as a laser beam, light beam, optical beam, emitted beam, or beam. In particular embodiments, input beam **135** may be referred to as a return beam, received beam, return light, received light, input light, scattered light, or reflected light. As used herein, scattered light may refer to light that is scattered or reflected by a target **130**. As an example, an input beam **135** may include: light from the output beam **125** that is scattered by target **130**; light from the output beam **125** that is reflected by target **130**; or a combination of scattered and reflected light from target **130**.

In particular embodiments, receiver **140** may receive or detect photons from input beam **135** and generate one or more representative signals. For example, the receiver **140** may generate an output electrical signal **145** that is representative of the input beam **135**. This electrical signal **145** may be sent to controller **150**. In particular embodiments, controller **150** may include a processor, computing system (e.g., an ASIC or FPGA), or other suitable circuitry configured to analyze one or more characteristics of the electrical signal **145** from the receiver **140** to determine one or more characteristics of the target **130**, such as its distance downrange from the lidar system **100**. This can be done, for example, by analyzing the time of flight or phase modulation for a beam of light **125** transmitted by the light source **110**. If lidar system **100** measures a time of flight of T (e.g., T represents the round-trip time for light to travel from the lidar system **100** to the target **130** and back to the lidar system **100**), then the distance D from the target **130** to the lidar system **100** may be expressed as $D=c\cdot T/2$, where c is the speed of light (approximately 3.0×10^8 m/s). As an example, if a time of flight is measured to be T=300 ns, then the distance from the target **130** to the lidar system **100** may be determined to be approximately D=45.0 m. As another example, if a time of flight is measured to be T=1.33 μs, then the distance from the target **130** to the lidar system **100** may be determined to be approximately D=199.5 m. In particular embodiments, a distance D from lidar system **100** to a target **130** may be referred to as a distance, depth, or range of target **130**. As used herein, the speed of light c refers to the speed of light in any suitable medium, such as for example in air, water, or vacuum. As an example, the speed of light in vacuum is approximately 2.9979×10^8 m/s, and the speed of light in air (which has a refractive index of approximately 1.0003) is approximately 2.9970×10^8 m/s.

In particular embodiments, light source **110** may include a pulsed laser. As an example, light source **110** may be a pulsed laser that produces pulses of light with a pulse duration or pulse width of approximately 10 picoseconds (ps) to 20 nanoseconds (ns). As another example, light source **110** may be a pulsed laser that produces pulses with a pulse duration of approximately 200-400 ps. As another example, light source **110** may be a pulsed laser that produces pulses at a pulse repetition frequency of approximately 100 kHz to 5 MHz or a pulse period (e.g., a time between consecutive pulses) of approximately 200 ns to 10 μs. In particular embodiments, light source **110** may have a substantially constant pulse repetition frequency, or light source **110** may have a variable or adjustable pulse repetition frequency. As an example, light source **110** may be a pulsed laser that produces pulses at a substantially constant pulse repetition frequency of approximately 640 kHz (e.g., 640,000 pulses per second), corresponding to a pulse period of approximately 1.56 μs. As another example, light source **110** may have a pulse repetition frequency that can be varied from approximately 700 kHz to 3 MHz.

In particular embodiments, light source **110** may produce a free-space output beam **125** having any suitable average optical power, and the output beam **125** may have optical pulses with any suitable pulse energy or peak optical power. As an example, output beam **125** may have an average

power of approximately 1 mW, 10 mW, 100 mW, 1 W, 10 W, or any other suitable average power. As another example, output beam **125** may include pulses with a pulse energy of approximately 0.1 μJ, 1 μJ, 10 μJ, 100 μJ, 1 mJ, or any other suitable pulse energy. As another example, output beam **125** may include pulses with a peak power of approximately 10 W, 100 W, 1 kW, 5 kW, 10 kW, or any other suitable peak power. An optical pulse with a duration of 400 ps and a pulse energy of 1 μJ has a peak power of approximately 2.5 kW. If the pulse repetition frequency is 500 kHz, then the average power of an output beam **125** with 1-μJ pulses is approximately 0.5 W.

In particular embodiments, light source **110** may include a laser diode, such as for example, a Fabry-Perot laser diode, a quantum well laser, a distributed Bragg reflector (DBR) laser, a distributed feedback (DFB) laser, or a vertical-cavity surface-emitting laser (VCSEL). As an example, light source **110** may include an aluminum-gallium-arsenide (AlGaAs) laser diode, an indium-gallium-arsenide (InGaAs) laser diode, or an indium-gallium-arsenide-phosphide (InGaAsP) laser diode. In particular embodiments, light source **110** may include a pulsed laser diode with a peak emission wavelength of approximately 1400-1600 nm. As an example, light source **110** may include a laser diode that is current modulated to produce optical pulses. In particular embodiments, light source **110** may include a pulsed laser diode followed by one or more optical-amplification stages. As an example, light source **110** may be a fiber-laser module that includes a current-modulated laser diode with a peak wavelength of approximately 1550 nm followed by a single-stage or a multi-stage erbium-doped fiber amplifier (EDFA). As another example, light source **110** may include a continuous-wave (CW) or quasi-CW laser diode followed by an external optical modulator (e.g., an electro-optic modulator), and the output of the modulator may be fed into an optical amplifier.

In particular embodiments, an output beam of light **125** emitted by light source **110** may be a collimated optical beam with any suitable beam divergence, such as for example, a divergence of approximately 0.1 to 3.0 milliradian (mrad). A divergence of output beam **125** may refer to an angular measure of an increase in beam size (e.g., a beam radius or beam diameter) as output beam **125** travels away from light source **110** or lidar system **100**. In particular embodiments, output beam **125** may have a substantially circular cross section with a beam divergence characterized by a single divergence value. As an example, an output beam **125** with a circular cross section and a divergence of 1 mrad may have a beam diameter or spot size of approximately 10 cm at a distance of 100 m from lidar system **100**. In particular embodiments, output beam **125** may be an astigmatic beam or may have a substantially elliptical cross section and may be characterized by two divergence values. As an example, output beam **125** may have a fast axis and a slow axis, where the fast-axis divergence is greater than the slow-axis divergence. As another example, output beam **125** may be an astigmatic beam with a fast-axis divergence of 2 mrad and a slow-axis divergence of 0.5 mrad.

In particular embodiments, an output beam of light **125** emitted by light source **110** may be unpolarized or randomly polarized, may have no specific or fixed polarization (e.g., the polarization may vary with time), or may have a particular polarization (e.g., output beam **125** may be linearly polarized, elliptically polarized, or circularly polarized). As an example, light source **110** may produce linearly polarized light, and lidar system **100** may include a quarter-wave plate that converts this linearly polarized light into circularly polarized light. The circularly polarized light may be transmitted as output beam **125**, and lidar system **100** may receive input beam **135**, which may be substantially or at least partially circularly polarized in the same manner as the output beam **125** (e.g., if output beam **125** is right-hand circularly polarized, then input beam **135** may also be right-hand circularly polarized). The input beam **135** may pass through the same quarter-wave plate (or a different quarter-wave plate) resulting in the input beam **135** being converted to linearly polarized light which is orthogonally polarized (e.g., polarized at a right angle) with respect to the linearly polarized light produced by light source **110**. As another example, lidar system **100** may employ polarization-diversity detection where two polarization components are detected separately. The output beam **125** may be linearly polarized, and the lidar system **100** may split the input beam **135** into two polarization components (e.g., s-polarization and polarization) which are detected separately by two photodiodes (e.g., a balanced photoreceiver that includes two photodiodes).

In particular embodiments, lidar system **100** may include one or more optical components configured to condition, shape, filter, modify, steer, or direct the output beam **125** or the input beam **135**. As an example, lidar system **100** may include one or more lenses, mirrors, filters (e.g., bandpass or interference filters), beam splitters, polarizers, polarizing beam splitters, wave plates (e.g., half-wave or quarter-wave plates), diffractive elements, or holographic elements. In particular embodiments, lidar system **100** may include a telescope, one or more lenses, or one or more mirrors to expand, focus, or collimate the output beam **125** to a desired beam diameter or divergence. As an example, the lidar system **100** may include one or more lenses to focus the input beam **135** onto an active region of receiver **140**. As another example, the lidar system **100** may include one or more flat mirrors or curved mirrors (e.g., concave, convex, or parabolic mirrors) to steer or focus the output beam **125** or the input beam **135**. For example, the lidar system **100** may include an off-axis parabolic mirror to focus the input beam **135** onto an active region of receiver **140**. As illustrated in FIG. **1**, the lidar system **100** may include mirror **115** (which may be a metallic or dielectric mirror), and mirror **115** may be configured so that light beam **125** passes through the mirror **115**. As an example, mirror **115** (which may be referred to as an overlap mirror, superposition mirror, or beam-combiner mirror) may include a hole, slot, or aperture which output light beam **125** passes through. As another example, mirror **115** may be configured so that at least 80% of output beam **125** passes through mirror **115** and at least 80% of input beam **135** is reflected by mirror **115**. In particular embodiments, mirror **115** may provide for output beam **125** and input beam **135** to be substantially coaxial so that the two beams travel along substantially the same optical path (albeit in opposite directions).

In particular embodiments, lidar system **100** may include a scanner **120** to steer the output beam **125** in one or more directions downrange. As an example, scanner **120** may include one or more scanning mirrors that are configured to rotate, tilt, pivot, or move in an angular manner about one or more axes. In particular embodiments, a flat scanning mirror may be attached to a scanner actuator or mechanism which scans the mirror over a particular angular range. As an example, scanner **120** may include a galvanometer scanner, a resonant scanner, a piezoelectric actuator, a polygonal scanner, a rotating-prism scanner, a voice coil motor, a DC motor, a stepper motor, or a microelectromechanical systems (MEMS) device, or any other suitable actuator or mechanism. In particular embodiments, scanner **120** may be con-

figured to scan the output beam **125** over a 5-degree angular range, 20-degree angular range, 30-degree angular range, 60-degree angular range, or any other suitable angular range. As an example, a scanning mirror may be configured to periodically rotate over a 15-degree range, which results in the output beam **125** scanning across a 30-degree range (e.g., a Θ-degree rotation by a scanning mirror results in a 2Θ-degree angular scan of output beam **125**). In particular embodiments, a field of regard (FOR) of a lidar system **100** may refer to an area or angular range over which the lidar system **100** may be configured to scan or capture distance information. As an example, a lidar system **100** with an output beam **125** with a 30-degree scanning range may be referred to as having a 30-degree angular field of regard. As another example, a lidar system **100** with a scanning mirror that rotates over a 30-degree range may produce an output beam **125** that scans across a 60-degree range (e.g., a 60-degree FOR). In particular embodiments, lidar system **100** may have a FOR of approximately 10°, 20°, 40°, 60°, 120°, or any other suitable FOR.

In particular embodiments, scanner **120** may be configured to scan the output beam **125** horizontally and vertically, and lidar system **100** may have a particular FOR along the horizontal direction and another particular FOR along the vertical direction. As an example, lidar system **100** may have a horizontal FOR of 10° to 120° and a vertical FOR of 2° to 45°. In particular embodiments, scanner **120** may include a first mirror and a second mirror, where the first mirror directs the output beam **125** toward the second mirror, and the second mirror directs the output beam **125** downrange. As an example, the first mirror may scan the output beam **125** along a first direction, and the second mirror may scan the output beam **125** along a second direction that is substantially orthogonal to the first direction. As another example, the first mirror may scan the output beam **125** along a substantially horizontal direction, and the second mirror may scan the output beam **125** along a substantially vertical direction (or vice versa). In particular embodiments, scanner **120** may be referred to as a beam scanner, optical scanner, or laser scanner.

In particular embodiments, one or more scanning mirrors may be communicatively coupled to controller **150** which may control the scanning mirror(s) so as to guide the output beam **125** in a desired direction downrange or along a desired scan pattern. In particular embodiments, a scan pattern (which may be referred to as an optical scan pattern, optical scan path, or scan path) may refer to a pattern or path along which the output beam **125** is directed. As an example, scanner **120** may include two scanning mirrors configured to scan the output beam **125** across a 60° horizontal FOR and a 20° vertical FOR. The two scanner mirrors may be controlled to follow a scan path that substantially covers the 60°×20° FOR. As an example, the scan path may result in a point cloud with pixels that substantially cover the 60°×20° FOR. The pixels may be approximately evenly distributed across the 60°×20° FOR. Alternately, the pixels may have a particular nonuniform distribution (e.g., the pixels may be distributed across all or a portion of the 60°×20° FOR, and the pixels may have a higher density in one or more particular regions of the 60°×20° FOR).

In particular embodiments, receiver **140** may be referred to as a photoreceiver, optical receiver, optical sensor, detector, photodetector, or optical detector. In particular embodiments, lidar system **100** may include a receiver **140** that receives or detects at least a portion of input beam **135** and produces an electrical signal that corresponds to input beam **135**. As an example, if input beam **135** includes an optical pulse, then receiver **140** may produce an electrical current or voltage pulse that corresponds to the optical pulse detected by receiver **140**. As another example, receiver **140** may include one or more avalanche photodiodes (APDs) or one or more single-photon avalanche diodes (SPADs). As another example, receiver **140** may include one or more PN photodiodes (e.g., a photodiode structure formed by a p-type semiconductor and a n-type semiconductor) or one or more PIN photodiodes (e.g., a photodiode structure formed by an undoped intrinsic semiconductor region located between p-type and n-type regions). Receiver **140** may have an active region or an avalanche-multiplication region that includes silicon, germanium, or InGaAs. The active region of receiver **140** may have any suitable size, such as for example, a diameter or width of approximately 50-500 μm. In particular embodiments, receiver **140** may include circuitry that performs signal amplification, sampling, filtering, signal conditioning, analog-to-digital conversion, time-to-digital conversion, pulse detection, threshold detection, rising-edge detection, or falling-edge detection. As an example, receiver **140** may include a transimpedance amplifier that converts a received photocurrent (e.g., a current produced by an APD in response to a received optical signal) into a voltage signal. The voltage signal may be sent to pulse-detection circuitry that produces an analog or digital output signal **145** that corresponds to one or more characteristics (e.g., rising edge, falling edge, amplitude, or duration) of a received optical pulse. As an example, the pulse-detection circuitry may perform a time-to-digital conversion to produce a digital output signal **145**. The electrical output signal **145** may be sent to controller **150** for processing or analysis (e.g., to determine a time-of-flight value corresponding to a received optical pulse).

In particular embodiments, controller **150** may be electrically coupled or communicatively coupled to light source **110**, scanner **120**, or receiver **140**. As an example, controller **150** may receive electrical trigger pulses or edges from light source **110**, where each pulse or edge corresponds to the emission of an optical pulse by light source **110**. As another example, controller **150** may provide instructions, a control signal, or a trigger signal to light source **110** indicating when light source **110** should produce optical pulses. Controller **150** may send an electrical trigger signal that includes electrical pulses, where each electrical pulse results in the emission of an optical pulse by light source **110**. In particular embodiments, the frequency, period, duration, pulse energy, peak power, average power, or wavelength of the optical pulses produced by light source **110** may be adjusted based on instructions, a control signal, or trigger pulses provided by controller **150**. In particular embodiments, controller **150** may be coupled to light source **110** and receiver **140**, and controller **150** may determine a time-of-flight value for an optical pulse based on timing information associated with when the pulse was emitted by light source **110** and when a portion of the pulse (e.g., input beam **135**) was detected or received by receiver **140**. In particular embodiments, controller **150** may include circuitry that performs signal amplification, sampling, filtering, signal conditioning, analog-to-digital conversion, time-to-digital conversion, pulse detection, threshold detection, rising-edge detection, or falling-edge detection.

In particular embodiments, a lidar system **100** may be used to determine the distance to one or more downrange targets **130**. By scanning the lidar system **100** across a field of regard, the system can be used to map the distance to a number of points within the field of regard. Each of these depth-mapped points may be referred to as a pixel. A

collection of pixels captured in succession (which may be referred to as a depth map, a point cloud, or a frame) may be rendered as an image or may be analyzed to identify or detect objects or to determine a shape or distance of objects within the FOR. As an example, a depth map may cover a field of regard that extends 60° horizontally and 15° vertically, and the depth map may include a frame of 100-2000 pixels in the horizontal direction by 4-400 pixels in the vertical direction.

In particular embodiments, lidar system **100** may be configured to repeatedly capture or generate point clouds of a field of regard at any suitable frame rate between approximately 0.1 frames per second (FPS) and approximately 1,000 FPS. As an example, lidar system **100** may generate point clouds at a frame rate of approximately 0.1 FPS, 0.5 FPS, 1 FPS, 2 FPS, 5 FPS, 10 FPS, 20 FPS, 100 FPS, 500 FPS, or 1,000 FPS. As another example, lidar system **100** may be configured to produce optical pulses at a rate of 5×10^5 pulses/second (e.g., the system may determine 500,000 pixel distances per second) and scan a frame of 1000×50 pixels (e.g., 50,000 pixels/frame), which corresponds to a point-cloud frame rate of 10 frames per second (e.g., 10 point clouds per second). In particular embodiments, a point-cloud frame rate may be substantially fixed, or a point-cloud frame rate may be dynamically adjustable. As an example, a lidar system **100** may capture one or more point clouds at a particular frame rate (e.g., 1 Hz) and then switch to capture one or more point clouds at a different frame rate (e.g., 10 Hz). A slower frame rate (e.g., 1 Hz) may be used to capture one or more high-resolution point clouds, and a faster frame rate (e.g., 10 Hz) may be used to rapidly capture multiple lower-resolution point clouds.

In particular embodiments, a lidar system **100** may be configured to sense, identify, or determine distances to one or more targets **130** within a field of regard. As an example, a lidar system **100** may determine a distance to a target **130**, where all or part of the target **130** is contained within a field of regard of the lidar system **100**. In particular embodiments, target **130** may include all or part of an object that is moving or stationary relative to lidar system **100**. As an example, target **130** may include all or a portion of a person, vehicle, motorcycle, truck, train, bicycle, wheelchair, pedestrian, animal, road sign, traffic light, lane marking, road-surface marking, parking space, pylon, guard rail, traffic barrier, pothole, railroad crossing, obstacle in or near a road, curb, stopped vehicle on or beside a road, utility pole, house, building, trash can, mailbox, tree, any other suitable object, or any suitable combination of all or part of two or more objects.

In particular embodiments, one or more lidar systems **100** may be integrated into a vehicle. As an example, multiple lidar systems **100** may be integrated into a car to provide a complete 360-degree horizontal FOR around the car. As another example, 6-10 lidar systems **100**, each system having a 45-degree to 90-degree horizontal FOR, may be combined together to form a sensing system that provides a point cloud covering a 360-degree horizontal FOR. The lidar systems **100** may be oriented so that adjacent FORs have an amount of spatial or angular overlap to allow data from the multiple lidar systems **100** to be combined or stitched together to form a single or continuous 360-degree point cloud. As an example, the FOR of each lidar system **100** may have approximately 1-15 degrees of overlap with an adjacent FOR. In particular embodiments, a vehicle may refer to a mobile machine configured to transport people or cargo. For example, a vehicle may include, may take the form of, or may be referred to as a car, automobile, motor vehicle, truck, bus, van, trailer, off-road vehicle, farm vehicle, lawn mower, construction equipment, golf cart, motorhome, taxi, motorcycle, scooter, bicycle, skateboard, train, snowmobile, watercraft (e.g., a ship or boat), aircraft (e.g., a fixed-wing aircraft, helicopter, or dirigible), or spacecraft. In particular embodiments, a vehicle may include an internal combustion engine or an electric motor that provides propulsion for the vehicle.

In particular embodiments, one or more lidar systems **100** may be included in a vehicle as part of an advanced driver assistance system (ADAS) to assist a driver of the vehicle in the driving process. For example, a lidar system **100** may be part of an ADAS that provides information or feedback to a driver (e.g., to alert the driver to potential problems or hazards) or that automatically takes control of part of a vehicle (e.g., a braking system or a steering system) to avoid collisions or accidents. A lidar system **100** may be part of a vehicle ADAS that provides adaptive cruise control, automated braking, automated parking, collision avoidance, alerts the driver to hazards or other vehicles, maintains the vehicle in the correct lane, or provides a warning if an object or another vehicle is in a blind spot.

In particular embodiments, one or more lidar systems **100** may be integrated into a vehicle as part of an autonomous-vehicle driving system. As an example, a lidar system **100** may provide information about the surrounding environment to a driving system of an autonomous vehicle. An autonomous-vehicle driving system may include one or more computing systems that receive information from a lidar system **100** about the surrounding environment, analyze the received information, and provide control signals to the vehicle's driving systems (e.g., steering wheel, accelerator, brake, or turn signal). As an example, a lidar system **100** integrated into an autonomous vehicle may provide an autonomous-vehicle driving system with a point cloud every 0.1 seconds (e.g., the point cloud has a 10 Hz update rate, representing 10 frames per second). The autonomous-vehicle driving system may analyze the received point clouds to sense or identify targets **130** and their respective distances or speeds, and the autonomous-vehicle driving system may update control signals based on this information. As an example, if lidar system **100** detects a vehicle ahead that is slowing down or stopping, the autonomous-vehicle driving system may send instructions to release the accelerator and apply the brakes.

In particular embodiments, an autonomous vehicle may be referred to as an autonomous car, driverless car, self-driving car, robotic car, or unmanned vehicle. In particular embodiments, an autonomous vehicle may refer to a vehicle configured to sense its environment and navigate or drive with little or no human input. As an example, an autonomous vehicle may be configured to drive to any suitable location and control or perform all safety-critical functions (e.g., driving, steering, braking, parking) for the entire trip, with the driver not expected to control the vehicle at any time. As another example, an autonomous vehicle may allow a driver to safely turn their attention away from driving tasks in particular environments (e.g., on freeways), or an autonomous vehicle may provide control of a vehicle in all but a few environments, requiring little or no input or attention from the driver.

In particular embodiments, an autonomous vehicle may be configured to drive with a driver present in the vehicle, or an autonomous vehicle may be configured to operate the vehicle with no driver present. As an example, an autonomous vehicle may include a driver's seat with associated controls (e.g., steering wheel, accelerator pedal, and brake

pedal), and the vehicle may be configured to drive with no one seated in the driver's seat or with little or no input from a person seated in the driver's seat. As another example, an autonomous vehicle may not include any driver's seat or associated driver's controls, and the vehicle may perform substantially all driving functions (e.g., driving, steering, braking, parking, and navigating) without human input. As another example, an autonomous vehicle may be configured to operate without a driver (e.g., the vehicle may be configured to transport human passengers or cargo without a driver present in the vehicle). As another example, an autonomous vehicle may be configured to operate without any human passengers (e.g., the vehicle may be configured for transportation of cargo without having any human passengers onboard the vehicle).

FIG. **2** illustrates an example scan pattern **200** produced by a lidar system **100**. In particular embodiments, a lidar system **100** may be configured to scan output optical beam **125** along one or more particular scan patterns **200**. In particular embodiments, a scan pattern **200** may have any suitable horizontal FOR (FOR_H) and any suitable vertical FOR (FOR_V). For example, a scan pattern **200** may have a field of regard (e.g., $FOR_H \times FOR_V$) of 40°×30°, 90°×40°, or 60°×15°. As another example, a scan pattern **200** may have a FOR_H greater than or equal to 10°, 25°, 30°, 40°, 60°, 90°, or 120°. As another example, a scan pattern **200** may have a FOR_V greater than or equal to 2°, 5°, 10°, 15°, 20°, 30°, or 45°. In the example of FIG. **2**, reference line **220** represents a center of the field of regard of scan pattern **200**. In particular embodiments, reference line **220** may have any suitable orientation, such as for example, a horizontal angle of 0° (e.g., reference line **220** may be oriented straight ahead) and a vertical angle of 0° (e.g., reference line **220** may have an inclination of 0°), or reference line **220** may have a nonzero horizontal angle or a nonzero inclination (e.g., a vertical angle of +10° or −10°. In FIG. **2**, if the scan pattern **200** has a 60°×15° field of regard, then scan pattern **200** covers a ±30° horizontal range with respect to reference line **220** and a ±7.5° vertical range with respect to reference line **220**. Additionally, optical beam **125** in FIG. **2** has an orientation of approximately −15° horizontal and +3° vertical with respect to reference line **220**. Optical beam **125** may be referred to as having an azimuth of −15° and an altitude of +3° relative to reference line **220**. In particular embodiments, an azimuth (which may be referred to as an azimuth angle) may represent a horizontal angle with respect to reference line **220**, and an altitude (which may be referred to as an altitude angle, elevation, or elevation angle) may represent a vertical angle with respect to reference line **220**.

In particular embodiments, a scan pattern **200** may include multiple pixels **210**, and each pixel **210** may be associated with one or more laser pulses and one or more corresponding distance measurements. In particular embodiments, a cycle of scan pattern **200** may include a total of $P_x \times P_y$ pixels **210** (e.g., a two-dimensional distribution of P_x by P_y pixels). As an example, scan pattern **200** may include a distribution with dimensions of approximately 100-2,000 pixels **210** along a horizontal direction and approximately 4-400 pixels **210** along a vertical direction. As another example, scan pattern **200** may include a distribution of 1,000 pixels **210** along the horizontal direction by 64 pixels **210** along the vertical direction (e.g., the frame size is 1000×64 pixels) for a total of 64,000 pixels per cycle of scan pattern **200**. In particular embodiments, the number of pixels **210** along a horizontal direction may be referred to as a horizontal resolution of scan pattern **200**, and the number of pixels **210** along a vertical direction may be referred to as a vertical resolution. As an example, scan pattern **200** may have a horizontal resolution of greater than or equal to 100 pixels **210** and a vertical resolution of greater than or equal to 4 pixels **210**. As another example, scan pattern **200** may have a horizontal resolution of 100-2,000 pixels **210** and a vertical resolution of 4-400 pixels **210**.

In particular embodiments, each pixel **210** may be associated with a distance (e.g., a distance to a portion of a target **130** from which an associated laser pulse was scattered) or one or more angular values. As an example, a pixel **210** may be associated with a distance value and two angular values (e.g., an azimuth and altitude) that represent the angular location of the pixel **210** with respect to the lidar system **100**. A distance to a portion of target **130** may be determined based at least in part on a time-of-flight measurement for a corresponding pulse. An angular value (e.g., an azimuth or altitude) may correspond to an angle (e.g., relative to reference line **220**) of output beam **125** (e.g., when a corresponding pulse is emitted from lidar system **100**) or an angle of input beam **135** (e.g., when an input signal is received by lidar system **100**). In particular embodiments, an angular value may be determined based at least in part on a position of a component of scanner **120**. As an example, an azimuth or altitude value associated with a pixel **210** may be determined from an angular position of one or more corresponding scanning mirrors of scanner **120**.

FIG. **3** illustrates an example lidar system **100** that includes a laser **300**, sensor **310**, and laser-sensor link **320**. In particular embodiments, laser **300** may be configured to emit pulses of light and may be referred to as a laser system, laser head, or light source. In particular embodiments, laser **300** may include, may be part of, may be similar to, or may be substantially the same as light source **110** illustrated in FIG. **1** and described above. Additionally, the lidar system **100** in FIG. **3** may include components similar to those of lidar system **100** in FIG. **1** (e.g., mirror **115**, scanner **120**, receiver **140**, or controller **150**). In the example of FIG. **3**, laser **300** is coupled to a remotely located sensor **310** by a laser-sensor link **320** (which may be referred to as a link). In particular embodiments, sensor **310** may be referred to as a sensor head and may include a mirror **115**, scanner **120**, receiver **140**, or controller **150**. As an example, laser **300** may include a pulsed laser diode (e.g., a pulsed DFB laser) followed by an optical amplifier, and light from the laser **300** may be conveyed by an optical fiber of laser-sensor link **320** to a scanner **120** in a remotely located sensor **310**. A length of laser-sensor link **320** or a separation distance between laser **300** and sensor **310** may be approximately 0.5 m, 1 m, 2 m, 5 m, 10 m, 20 m, 50 m, 100 m, or any other suitable distance.

FIG. **4** illustrates an example lidar system **100** where the laser-sensor link **320** includes an optical link **330** and an electrical link **350** coupled between the laser **300** and the sensor **310**. The lidar system **100** in FIG. **4** includes a light source (e.g., laser **300**) that is located remotely from a sensor head **310**, where the sensor head **310** includes other lidar-system components (e.g., output collimator **340**, mirror **115**, scanner **120**, receiver **140**, and controller **150**). In particular embodiments, a laser-sensor link **320** may refer to a cable harness, conduit, or assembly that provides an optical or electrical connection between a light source (e.g., laser **300**) and a sensor head **310**. A laser-sensor link **320** may have any suitable length (e.g., a length greater than or equal to 0.5 m, 1 m, 2 m, 5 m, 10 m, 20 m, 50 m, or 100 m) and may be used to send optical or electrical signals from laser **300** to sensor **310** or from sensor **310** to laser **300**. A laser-sensor link **320** may include any suitable number of optical links **330** (e.g.,

0, 1, 2, 3, 5, or 10 optical links **330**) or any suitable number of electrical links **350** (e.g., 0, 1, 2, 3, 5, or 10 electrical links **350**). In FIG. **4**, the laser-sensor link **320** includes one optical link **330** from laser **300** to output collimator **340** and one electrical link **350** that connects laser **300** and controller **150**. Each optical link **330** and each electrical link **350** of a laser-sensor link **320** may have any suitable length, such as for example, a length of approximately 0.5 m, 1 m, 2 m, 5 m, 10 m, 20 m, 50 m, or 100 m. As an example, laser **300** and sensor **310** may be located approximately 4 meters apart, and a fiber-optic cable **330** that conveys light from laser **300** to sensor **310** may have a length of greater than or equal to 4 meters.

In particular embodiments, an optical link **330** may include optical fiber (which may be referred to as fiber-optic cable or fiber) that conveys, carries, transports, or transmits light between a laser **300** and a sensor **310**. As an example, optical link **330** (which may be referred to as a fiber-optic link or a fiber link) may include any suitable type of optical fiber, such as for example, single-mode (SM) fiber, multi-mode (MM) fiber, large-mode-area (LMA) fiber, polarization-maintaining (PM) fiber, photonic-crystal or photonic-bandgap fiber, gain fiber (e.g., rare-earth-doped optical fiber for use in an optical amplifier), or any suitable combination thereof. As another example, optical link **330** may include a glass SM fiber with a core diameter of approximately 8 μm and a cladding diameter of approximately 125 μm. As another example, optical link **330** may include a photonic-crystal fiber or a photonic-bandgap fiber in which light is confined or guided by an arrangement of air holes distributed along the length of a glass fiber. In particular embodiments, an optical link **330** may include a fiber-optic cable that is coupled to, attached to, or terminated at an output collimator **340**. In FIG. **4**, optical link **330** conveys optical pulses (which are emitted by laser **300**) to sensor head **310**, and the optical link **330** is terminated at output collimator **340**. The output collimator **340** may include a lens or a fiber-optic collimator that receives light from a fiber-optic cable **330** and produces a free-space optical beam **125**. In FIG. **4**, output collimator **340** receives optical pulses conveyed from laser **300** by optical link **330** and produces a free-space optical beam **125** that includes the optical pulses. The output collimator **340** directs the free-space optical beam **125** through mirror **115** and to scanner **120**.

In particular embodiments, an electrical link **350** may include electrical wire or cable that conveys or transmits electrical power or one or more electrical signals between laser **300** and sensor **310**. In particular embodiments, an electrical link **350** may convey electrical power to sensor **310** from laser **300**, or vice versa. As an example, laser **300** may include a power supply or a power conditioner that provides electrical power to the laser **300**, and additionally, the power supply or power conditioner may provide power to one or more components of sensor **310** (e.g., scanner **120**, receiver **140**, or controller **150**) via one or more electrical links **350**.

In particular embodiments, electrical link **350** may convey one or more electrical signals from laser **300** to sensor **310**, or vice versa. The electrical signals may include data or information in the form of an analog or digital signal. As an example, an electrical link **350** may include a coaxial cable or twisted-pair cable configured to transmit an analog or digital signal from receiver **140** or controller **150** to a controller or processor located in laser **300**. As another example, an electrical link **350** may convey instructions or a drive signal for scanner **120** from a controller or processor located in laser **300** to sensor **310**. As another example, all or part of a controller or processor may be located in laser **300**, and one or more electrical links **350** may convey signals to or from scanner **120**, receiver **140**, or controller **150** located in sensor **310**. As another example, an electrical link **350** may provide an interlock signal from sensor **310** to laser **300**. If controller **150** detects a fault condition indicating a problem with the lidar system **100**, the controller **150** may change a voltage on an interlock line (e.g., from 5 V to 0 V) indicating that laser **300** should shut down, stop emitting light, or reduce the power or energy of emitted light. A fault condition may be triggered by a failure of scanner **120**, by a failure of receiver **140**, or by a person or object coming within a threshold distance of sensor **310** (e.g., within 0.1 m, 0.5 m, 1 m, 5 m, or any other suitable distance).

In particular embodiments, sensor head **310** may include a scanner **120** configured to scan pulses of light across a field of regard of the sensor head **310**. The scanned pulses of light may include pulses of light emitted by laser **300** and conveyed from the laser **300** to the sensor **310** by fiber-optic cable **330** of optical link **320**. In particular embodiments, sensor head **310** may include a receiver **140** configured to detect at least a portion of the scanned pulses of light scattered or reflected by a target **130** located downrange from the sensor head **310**. The target **130** may be at least partially contained within a field of regard of the sensor head **310** and located a distance D from the sensor head **310** that is less than or equal to a maximum range R_{MAX} of the lidar system **100**. In particular embodiments, a maximum range (which may be referred to as a maximum distance) of a lidar system **100** may refer to the maximum distance over which the lidar system **100** is configured to sense or identify targets **130** that appear in a field of regard of the lidar system **100**. The maximum range of lidar system **100** may be any suitable distance, such as for example, 25 m, 50 m, 100 m, 200 m, 500 m, or 1 km. As an example, a lidar system **100** with a 200-m maximum range may be configured to sense or identify various targets **130** located up to 200 m away from a sensor head **310** of the lidar system **100**. For a lidar system **100** with a 200-m maximum range (R_{MAX}=200 m), the time of flight corresponding to the maximum range is approximately $2 \cdot R_{MAX}/c \cong 1.33$ μs.

In particular embodiments, lidar system **100** may include one or more processors (e.g., controller **150**) configured to determine a distance D from sensor **310** to a target **130** based at least in part on a time of flight for a pulse of light to travel from the sensor **310** to the target **130** and back to the sensor **310**. As an example, a controller **150** may be located in laser **300** or in sensor **310**, or parts of a controller **150** may be distributed between laser **300** and sensor **310**. As another example, lidar system **100** may include two or more processors (e.g., one processor may be located in laser **300** and another processor may be located in sensor **310**). A time-of-flight value or a distance from sensor **310** to target **130** may be determined by a controller **150** located in laser **300** or sensor **310**. Alternately, a time-of-flight value or a distance to target **130** may be determined by a combination of devices located in laser **300** and sensor **310**. As an example, each sensor head **310** of a lidar system **100** may include electronics (e.g., an electronic filter, transimpedance amplifier, threshold detector, or time-to-digital (TDC) converter) configured to receive or process a signal from receiver **140** or from an APD or SPAD of receiver **140**. Additionally, laser **300** may include processing electronics configured to determine a time-of-flight value or a distance to target **130** based on a signal received from a sensor head **310** via an electrical link **350**.

A lidar system **100** as described or illustrated herein may also include various elements described or illustrated in U.S. Provisional Patent Application No. 62/243,633, filed Oct. 19, 2015 and entitled "Lidar System with Improved Signal-to-Noise Ratio in the Presence of Solar Background Noise" or U.S. Provisional Patent Application No. 62/251,672, filed Nov. 5, 2015 and entitled "Lidar System with Improved Scanning Speed for High-Resolution Depth Mapping," each of which is incorporated herein by reference.

FIG. **5** illustrates an example lidar system **100** with a laser **300** coupled to multiple sensor heads (**310-1**, **310-2**, . . . , **310**-N) by multiple respective laser-sensor links (**320-1**, **320-2**, . . . , **320**-N). In particular embodiments, each laser-sensor link **320** may couple laser **300** to a corresponding sensor head **310**, and each laser-sensor link **320** may include an optical link **330** configured to convey pulses of light from laser **300** to the corresponding sensor head **310**. In FIG. **5**, the laser-sensor links **320-1** through **320**-N may each include a fiber-optic cable having a length greater than or equal to 1 meter. In particular embodiments, a lidar system **100** may include a laser **300** coupled to 1, 2, 4, 6, 8, 10, 20, or any other suitable number of sensor heads **310**. In FIG. **5**, lidar system **100** includes N laser-sensor links **320** which couple laser **300** to N respective sensor heads **310**. In FIG. **5**, laser-sensor link **320-1** couples laser **300** to sensor **310-1**, laser-sensor link **320-2** couples laser **300** to sensor **310-2**, and laser-sensor link **320**-N couples laser **300** to sensor **310**-N. In particular embodiments, each laser-sensor link **320** may be configured to convey at least a portion of pulses of light emitted by laser **300** to a corresponding sensor head **310**. As an example, in FIG. **5**, lidar system **100** may include six laser-sensor links **320** and six sensors **310** (e.g., N=6), and each pulse emitted by laser **300** may be split between each of the six sensor heads **310**. As another example, each pulse emitted by laser **300** may be directed to a particular sensor head so that each sensor head receives one out of every six pulses emitted by laser **300** (e.g., the 1st, 7th, 13th, . . . pulses may be conveyed to sensor **310-1**; the 2nd, 8th, 14th, . . . pulses may be conveyed to sensor **310-2**; etc.).

FIG. **6** illustrates an example vehicle with a lidar system that includes a laser **300** with multiple sensor heads **310** coupled to the laser **300** by multiple laser-sensor links **320**. In particular embodiments, each laser-sensor link **320** may include one or more optical links **330** or one or more electrical links **350**. As an example, each laser-sensor link **320** may include an optical link **330** configured to convey at least a portion of the pulses of light emitted by laser **300** to a corresponding sensor head **310**. Additionally, each sensor head **310** may include a scanner **120** configured to scan the pulses of light conveyed from the laser **300** to the sensor head **310** by the corresponding optical link **330**. As another example, each laser-sensor link **320** may include one or more electrical links **350** that convey electrical power or signals between laser **300** and a corresponding sensor head **310**.

In particular embodiments, a lidar system **100** may be incorporated into a vehicle, and sensor heads **310** may be positioned or oriented to provide a greater than or equal to 30-degree view of an environment around the vehicle. As an example, a lidar system **100** with multiple sensor heads **310** may provide a horizontal field of regard around a vehicle of approximately 30°, 45°, 60°, 90°, 120°, 180°, 270°, or 360°. Each sensor head **310** may be attached to or incorporated into a bumper, fender, grill, side panel, spoiler, roof, headlight assembly, taillight assembly, rear-view mirror assembly, hood, trunk, window, or any other suitable part of a vehicle. In the example of FIG. **6**, four sensor heads **310** are positioned at or near the four corners of the vehicle (e.g., the sensor heads may be incorporated into a light assembly, side panel, bumper, or fender), and laser **300** may be located within the vehicle (e.g., in or near the trunk). The four sensor heads **310** may each provide a 90° to 120° horizontal field of regard (FOR), and the four sensor heads **310** may be oriented so that together they provide a complete 360-degree view around the vehicle. As another example, a lidar system **100** may include six sensor heads **310** positioned on or around a vehicle, where each sensor head **310** provides a 60° to 90° horizontal FOR. As another example, a lidar system **100** may include eight sensor heads **310**, and each sensor head **310** may provide a 45° to 60° horizontal FOR. As another example, a lidar system **100** may include six sensor heads **310**, where each sensor head **310** provides a 70° horizontal FOR with an overlap between adjacent FORs of approximately 10°. As another example, a lidar system **100** may include two sensor heads **310** which together provide a forward-facing horizontal FOR of greater than or equal to 30°. In particular embodiments, data from each of multiple sensor heads **310** may be combined or stitched together to generate a point cloud that covers a greater than or equal to 30-degree horizontal view around a vehicle. As an example, laser **300** may include a controller or processor that receives data from each sensor head **310** (e.g., via a corresponding electrical link **350**) and processes the received data to construct a point cloud covering a 360-degree horizontal view around a vehicle or to determine distances to one or more targets **130**.

FIG. **7** illustrates an example laser **300** with a seed laser **400** and a demultiplexer **410** that distributes light from the seed laser to multiple optical links (**330-1**, **330-2**, . . . , **330**-N). Each optical link conveys light received from the demultiplexer **410** to a corresponding sensor head (e.g., optical link **330-1** conveys light to sensor head **310-1**, etc.). In particular embodiments, demultiplexer **410** may include an optical-power splitter, an optical switch, a wavelength demultiplexer, or any suitable combination thereof. In particular embodiments, seed laser **400** may produce optical pulses, and laser **300** may also include one or more optical amplifiers (not illustrated in FIG. **7**) to amplify the seed-laser pulses. In particular embodiments, a lidar system **100** may include N optical links (**330-1**, **330-2**, . . . , **330**-N) coupled to N respective sensor heads (**310-1**, **310-2**, . . . , **310**-N), and laser **300** may include a 1×N optical demultiplexer **410** configured to distribute pulses of light between the N optical links. The pulses of light distributed to the optical links may be pulses directly emitted by the seed laser **400** or pulses that are emitted by the seed laser **400** and then amplified by one or more optical amplifiers.

In particular embodiments, each optical link (**330-1**, **330-2**, . . . , **330**-N) may be approximately the same length, or the optical links may have two or more different lengths. As an example, each optical link may include a fiber-optic cable with a length of approximately 20 m. As another example, the optical links may each include a fiber-optic cable with a particular or different length (e.g., two of the optical links may include a 5-m fiber, another two optical links may include a 10-m fiber, and one optical link may include a 20-m fiber). In particular embodiments, the sensor heads (**310-1**, **310-2**, . . . , **310**-N) may emit optical pulses at substantially the same time or at different times with respect to each other. As an example, a demultiplexer **410** may split a single optical pulse into N optical pulses. The N optical pulses may be conveyed to the N sensor heads by fiber-optic cables having substantially the same length, and the pulses

may be emitted by the sensor heads at approximately the same time. As another example, the N optical pulses may be conveyed to the N sensor heads by fiber-optic cables having two or more different lengths, and, due to the different propagation times associated with the different fiber lengths, the pulses may be emitted at different times. As another example, the demultiplexer **410** may direct different optical pulses to different sensor heads at different times, resulting in the pulses being emitted by the sensor heads at different times. In particular embodiments, since each sensor head may emit and receive pulses independent of other sensor heads, the operation of a lidar system **100** as described and illustrated herein may not specifically depend on whether the pulses are emitted in a time-synchronous fashion or the pulses are emitted without regard to the relative time synchronization.

In particular embodiments, demultiplexer **410** may include a 1×N fiber-optic power splitter with one fiber-optic input port and N fiber-optic output ports. As an example, an optical-power splitter may include one or more fused biconical taper (FBT) splitters which are assembled by placing two or more fibers adjacent to one another and then fusing the fibers together by applying heat. As another example, an optical-power splitter may include a planar lightwave circuit (PLC) made by fabricating optical waveguides on a glass substrate using a lithographic process. In particular embodiments, a power splitter may be a passive optical device (e.g., requiring no electronics or electrical power) configured to split each pulse of light received at an input port into N pulses of light which are then sent to each of the respective N output ports. A 1×N optical-power splitter may send each pulse of the N pulses to a corresponding optical link (**330-1**, **330-2**, . . . , **330**-N) for transmission to a corresponding sensor head (**310-1**, **310-2**, . . . , **310**-N).

In particular embodiments, a power splitter may split each received pulse of light substantially evenly into N pulses, where each of the N pulses has approximately 1/N of the energy or power of the received pulse of light. As an example, for a lidar system **100** with 8 sensor heads **310** (e.g., N=8), a demultiplexer **410** that includes a 1×8 power splitter may split a received pulse into 8 pulses, and each of those pulses may have approximately ⅛ of the pulse energy of the received pulse. If the received pulse has a pulse energy of 8 μJ, then each of the 8 pulses may have a pulse energy of approximately 1 μJ.

In particular embodiments, a power splitter may split each received pulse of light into N pulses with an unequal distribution of energy or power between the N pulses. As an example, for a lidar system **100** with 6 sensor heads **310**, a power splitter may split each received optical pulse into 2 high-energy pulses, 2 medium-energy pulses, and 2 low-energy pulses. Each high-energy pulse may have approximately 25% of the energy of the received pulse, each medium-energy pulse may have approximately 15% of the energy of the received pulse, and each low-energy pulse may have approximately 10% of the energy of the received pulse. As another example, for a lidar system **100** with 8 sensor heads **310**, a power splitter may split a received pulse into 4 high-energy pulses and 4 low-energy pulses. Each high-energy pulse may have approximately 15% to 20% of the energy of the received pulse, and each low-energy pulse may have approximately 5% to 10% of the energy of the received pulse. Splitting an optical pulse in an unequal manner may allow a lidar system **100** to supply higher-energy pulses to sensor heads **310** which are more critical to the lidar-system performance. As an example, the 4 high-energy pulses may be sent to sensor heads **310** that are substantially forward facing (e.g., facing in the direction of travel of a vehicle), and the 4 low-energy pulses may be sent to side-facing or rear-facing sensor heads **310**. An optical pulse with a higher energy may provide a sensor head **310** with a correspondingly longer maximum range as compared to a lower-energy pulse. As an example, sensor heads **310** supplied with high-energy pulses may have a maximum range of approximately 200 m, while sensor heads **310** supplied with low-energy pulses may have a maximum range of approximately 100 m.

In particular embodiments, demultiplexer **410** may include a 1×N optical switch. As an example, demultiplexer **410** may include a fiber-optic switch that allows light received at an input fiber-optic port to be selectively directed to one of N output fiber-optic ports. A 1×N optical switch may employ a switching mechanism that is based on mechanical switching, piezoelectric switching, thermal switching, liquid-crystal switching, switching with a MEMS device, or switching between waveguides in a PLC. A laser **300** may emit optical pulses with a pulse repetition frequency f, and a 1×N optical switch may sequentially switch the emitted pulses between each of the N optical links **330** (e.g., each optical link **330** receives one pulse for every N pulses emitted by laser **300**). Each sensor **310** may then perform lidar scanning with pulses having a pulse repetition frequency of approximately f/N. As an example, if laser **300** has a pulse repetition frequency of 3.6 MHz and lidar system **100** has 6 sensor heads **310**, then each sensor head **310** will receive every sixth pulse resulting in a sensor-head pulse repetition frequency of approximately 600 kHz. A demultiplexer **410** that sequentially switches input light to one of N output ports may be referred to as a temporal demultiplexer.

In particular embodiments, demultiplexer **410** may include a wavelength demultiplexer, which may be referred to as a wavelength splitter, a demux, or a wavelength division multiplexer (WDM). As an example, demultiplexer **410** may include a 1×N fiber-optic wavelength demultiplexer that receives light at N different wavelengths and directs the light to one of N output ports based on wavelength. A wavelength demultiplexer may perform wavelength splitting using a prism, diffraction grating, holographic grating, arrayed waveguide grating, or one or more dichroic filters. In particular embodiments, a lidar system **100** may use any suitable number of different wavelengths split between any suitable number of sensor heads **310**. As an example, laser **300** may produce pulses at N different wavelengths, and the pulses may be sent to N respective sensor heads **310** according to wavelength. As another example, laser **300** may produce pulses at N/2 different wavelengths, and the lidar system **100** may include N sensor heads **310** (e.g., each pulse at a particular wavelength may be split between two sensor heads **310**).

In particular embodiments, the pulses of light emitted by laser **300** may have N different wavelengths, and demultiplexer **410** may include a wavelength demultiplexer that sends each pulse having a particular wavelength to a corresponding optical link **330** for transmission to a corresponding sensor head **310**. As an example, laser **300** may include N laser diodes each configured to produce light at a particular wavelength, or laser **300** may include one wavelength-tunable laser configured to produce light at N different wavelengths. In particular embodiments, the N different wavelengths may have any suitable wavelength separation between adjacent wavelengths, such as for example a wavelength separation of approximately 0.8 nm, 1.6 nm, 4 nm, or 10 nm. As an example, laser **300** may produce pulses at four different wavelengths with a 1.6-nm wavelength separation

(e.g., 1550.1 nm, 1551.7 nm, 1553.3 nm, and 1554.9 nm), and the demultiplexer **410** may include a 1×4 wavelength demultiplexer that sends each of the four different wavelengths to a corresponding optical link **330**. A laser **300** may produce optical pulses at N different wavelengths (e.g., a repeating sequence of pulses at wavelengths $\lambda_1, \lambda_2, \ldots, \lambda_N$) with a pulse repetition frequency f. A 1×N wavelength demultiplexer may send each different wavelength to a particular sensor head **310** (e.g., each sensor head **310** receives one pulse for every N pulses emitted by laser **300**), resulting in a sensor-head pulse repetition frequency of approximately f/N. As an example, if laser **300** has a pulse repetition frequency of 4.8 MHz and produces pulses at 8 different wavelengths (corresponding to 8 sensor heads **310**), then each sensor head **310** will receive one out of eight pulses, resulting in a pulse repetition frequency for each sensor head **310** of approximately 600 kHz.

In particular embodiments, demultiplexer **410** may include a combination of one or more optical-power splitters, one or more optical switches, or one or more wavelength demultiplexers. As an example, demultiplexer **410** may include a 1×m optical-power splitter followed by m 1×N/m optical switches. The parameters N and m may each have any suitable positive integer value (e.g., 1, 2, 3, 4, 6, 8, or 10), where N is greater than m. If m=2 and N=8, then demultiplexer **410** includes a 1×2 power splitter followed by two 1×4 optical switches. As another example, demultiplexer **410** may include a 1×m optical switch followed by m 1×N/m optical-power splitters. If m=2 and N=6, then demultiplexer **410** includes a 1×2 optical switch followed by two 1×3 power splitters. The 1×2 optical switch may alternate between directing pulses to one of its two output ports. Every other pulse emitted by laser **300** may be directed to one of the two output ports, and each pulse is then split into three pulses by one of the 1×3 power splitters coupled to an output port of the switch. As another example, demultiplexer **410** may include a 1×m wavelength splitter followed by m 1×N/m optical-power splitters, and laser **300** may produce pulses at m different wavelengths. If m=4 and N=8, then demultiplexer **410** includes a 1×4 wavelength splitter followed by 4 1×2 optical-power splitters, and laser **300** may produce pulses at 4 different wavelengths. As another example, demultiplexer **410** may include a 1×m optical-power splitter followed by m 1×N/m wavelength splitters, and laser **300** may produce pulses at N/m different wavelengths. If m=4 and N=8, then demultiplexer **410** includes a 1×4 optical-power splitter followed by four 1×2 wavelength splitters. If laser **300** produces pulses at two different wavelengths, then each pulse may be split into four pulses by the power splitter, and each of the four pulses may be directed to one of two sensor heads **310** by the corresponding wavelength splitter.

FIG. **8** illustrates an example seed laser **400** that includes a laser diode **440** driven by a pulse generator **430**. Seed laser **400** or laser diode **440** in FIG. **8** may be referred to as a pulsed laser or a pulsed laser diode. In particular embodiments, a seed laser **400** may include a function generator **420**, a pulse generator **430**, a laser diode **440**, or a temperature controller **450**. In the example of FIG. **8**, seed laser **400** includes function generator **420** coupled to pulse generator **430**, which is in turn coupled to laser diode **440**. Additionally, temperature controller **450** is coupled to laser diode **440**. In particular embodiments, seed laser **400** may produce optical seed pulses, which are emitted at the seed-laser output (which may be a free-space output or a fiber-optic output). In particular embodiments, the optical seed pulses may have a pulse repetition frequency of less than or equal to 100 MHz (e.g., approximately 500 kHz, 640 kHz, 750 kHz, 1 MHz, 2 MHz, 4 MHz, 5 MHz, 10 MHz, 20 MHz, 50 MHz, or 100 MHz), a pulse duration of less than or equal to 20 nanoseconds (e.g., approximately 200 ps, 400 ps, 500 ps, 800 ps, 1 ns, 2 ns, 4 ns, 8 ns, 10 ns, 15 ns, or 20 ns), a duty cycle of less than or equal to 1% (e.g., approximately 0.01%, 0.02%, 0.05%, 0.1%, 0.2%, 0.5%, or 1%), or an operating wavelength of between 1400 nm and 2050 nm. As an example, the seed pulses may have a pulse repetition frequency of 500-750 kHz, a pulse duration of less than or equal to 2 ns, and a duty cycle of less than or equal to 0.1%. As another example, the seed pulses may have a pulse repetition frequency of approximately 640 kHz, and a pulse duration of approximately 1 ns (which corresponds to a duty cycle of approximately 0.064%). A duty cycle may be determined from the ratio of pulse duration to pulse period or from the product of pulse duration and pulse repetition frequency. The laser diode **440** may have any suitable operating wavelength, such as for example, an operating wavelength of approximately 1400 nm, 1500 nm, 1550 nm, 1600 nm, or 2000 nm. In particular embodiments, the seed pulses may be relatively low-power optical pulses, and the seed-laser output may be coupled to one or more optical amplifiers configured to amplify the low-power pulses to produce amplified pulses of light which are emitted by laser **300**. As an example, the seed pulses may have an average power of greater than or equal to 1 μW. As another example, the seed pulses may have an average power of between approximately 0.1 μW and 10 μW.

In particular embodiments, seed laser **400** may include a laser diode **440** that is electrically driven by pulse generator **430** to produce optical seed pulses. In the example of FIG. **8**, function generator **420** supplies a voltage signal **422** to pulse generator **430**, and pulse generator **430** drives laser diode **440** with a current signal **432**. As an example, function generator **420** may produce a pulsed voltage signal with a pulse repetition frequency of between approximately 0.5 and 2 MHz and a pulse duration of approximately 500 ps. Pulse generator **430** may drive laser diode **440** with a pulsed current signal **432** that corresponds to the voltage signal **422** received from function generator **420**. In particular embodiments, voltage signal **422** may include voltage pulses having any suitable shape, such as for example, square-shaped pulses, triangle-shaped pulses, Gaussian-shaped pulses, or pulses having an arbitrary shape or a combination of shapes. In particular embodiments, current signal **432** may have a DC offset or may include current pulses having any suitable shape, such as for example, square-shaped pulses, triangle-shaped pulses, Gaussian-shaped pulses, or pulses having an arbitrary shape or a combination of shapes. The pulses of current signal **432** may have a shape or duration similar to that of voltage signal **422**. Additionally, laser diode **440** may emit optical pulses with a shape (e.g., square, triangle, Gaussian, or arbitrary) or duration that at least approximately corresponds to the shape or duration of the current pulses supplied by pulse generator **430**.

In particular embodiments, laser diode **440** may be a Fabry-Perot laser diode, a DFB laser, or a DBR laser. As an example, laser diode **440** may be a DFB laser coupled to an optical fiber. Additionally, the light emitted by laser diode **440** may pass through an optical isolator that reduces the amount of back-reflected light that may be coupled back into the laser diode **440**. In particular embodiments, seed laser **400** may include a single laser diode **440** having a substantially fixed operating wavelength. As an example, laser diode **440** may be a single-wavelength laser configured to operate at a particular operating wavelength with limited

wavelength tunability. As another example, laser diode **440** may include a DFB laser with an operating wavelength between approximately 1400 nm and 1600 nm, and the DFB laser may be wavelength tunable over a range of approximately 4 nm (e.g., by adjusting the operating temperature of the laser diode **440**).

In particular embodiments, laser diode **440** may operate without temperature control, or seed laser **400** may include a temperature controller **450** to stabilize the operating temperature of laser diode **440**. As an example, the package or the semiconductor substrate of laser diode **440** may be thermally coupled to a thermoelectric cooler (TEC) driven by temperature controller **450** to adjust or stabilize the laser-diode operating temperature. The laser-diode operating temperature may be stabilized to within any suitable range of a target temperature set point, such as for example, within approximately ±0.01° C., ±0.05° C., ±0.1° C., ±0.5° C., or ±1° C. of a target temperature. Stabilization of the temperature of laser diode **440** may provide for the laser-diode operating wavelength to be substantially stable (e.g., the peak wavelength of laser diode **440** may vary by less than any suitable value, such as for example, less than approximately 0.1 nm, 0.5 nm, 1 nm, or 2 nm). If lidar system **100** includes a narrow-band optical filter, then the laser diode **440** may be temperature stabilized so as to match the laser-diode operating wavelength to the passband of the optical filter. In particular embodiments, the temperature controller **450** may be used to adjust the operating wavelength of laser diode **440** by adjusting the laser-diode set-point temperature. As an example, the laser diode **440** may include a DFB laser with an operating wavelength that may be temperature tuned from approximately 1548 nm to approximately 1552 nm by adjusting the temperature set-point of the laser.

In particular embodiments, seed laser **400** may include a wavelength-tunable laser configured to produce light at multiple wavelengths. As an example, a wavelength-tunable laser may produce optical pulses at multiple wavelengths of light corresponding to the multiple sensor heads **310** of a lidar system **100**. In particular embodiments, laser diode **440** may be a wavelength-tunable laser. As an example, laser diode **440** may have an operating wavelength that may be tunable over any suitable wavelength range, such as for example, 1 nm, 10 nm, 20 nm, 50 nm, or 100 nm. As another example, laser diode **440** may be tunable from approximately 1400 nm to approximately 1440 nm or from approximately 1530 nm to approximately 1560 nm. In particular embodiments, laser diode **440** may be an external-cavity diode laser which includes a laser diode and a wavelength-selective element, such as for example, a diffraction grating or a grating structure integrated within the semiconductor structure of the laser diode. In particular embodiments, laser diode **440** may be configured to produce optical pulses at multiple wavelengths. As an example, laser diode **440** may produce sequences of N pulses having N different wavelengths. The pulses may be amplified and each pulse may be conveyed to one or more particular sensor heads **310** based on the wavelength of the pulse.

In particular embodiments, seed laser **400** may include a fiber laser. As an example, seed laser **400** may include a fiber laser configured to produce optical pulses, or seed laser **400** may include a CW fiber laser. As another example, seed laser **400** may include a wavelength-tunable fiber laser. As another example, seed laser **400** may include a mode-locked fiber laser that produces optical pulses at a pulse repetition frequency greater than or equal to 1 MHz. Additionally, the seed laser **400** may include a pulse picker that extracts individual pulses from the optical pulses produced by the seed laser **400**. The pulse picker may include an electrically controlled electro-optic switch or acousto-optic modulator. As an example, a mode-locked fiber laser may produce optical pulses at a pulse repetition frequency of approximately 100 MHz, and a pulse picker (which may be located after the fiber laser) may "pick" or extract one pulse out of every 100 pulses produced by the fiber laser, resulting in a pulse repetition frequency of approximately 1 MHz. As another example, seed laser **400** may include a cavity-dumped fiber laser. The fiber laser may include an optical switch (e.g., an acousto-optic modulator or a Pockels cell) located in the laser cavity and configured to periodically select or "dump" a pulse out of the laser cavity. For example, the seed laser **400** may be a mode-locked fiber laser with a pulse repetition frequency of 75 MHz, and the cavity dumper may select 1 pulse out of every 100 pulses, resulting in an output pulse repetition frequency of approximately 750 kHz.

In particular embodiments, light source **110**, laser **300**, or seed laser **400** may include a diode-pumped solid-state laser (DPSS laser). As an example, seed laser **400** may include a Q-switched DPSS laser configured to produce optical pulses in a free-space output beam **125** that is coupled to scanner **120**. A gain crystal of a DPSS laser may include neodymium-doped yttrium aluminum garnet (Nd:YAG), neodymium-doped yttrium aluminum borate (Nd:YAB), erbium-doped glass, or glass or YAB doped with erbium (e.g., Er:YAB) or doped with erbium and ytterbium (e.g., Er:Yb:YAB). The gain crystal may be pumped by a diode laser that produces a free-space pump beam coupled to the gain crystal. The pump laser may operate at any suitable wavelength, such as for example, approximately 908 nm, 915 nm, 940 nm, 960 nm, 976 nm, 980 nm, 1050 nm, 1064 nm, 1450 nm, or 1480 nm. A Q-switch of a DPSS laser may be an active Q-switch (e.g., an acousto-optic modulator or electro-optic modulator) or a passive Q-switch (e.g., a saturable-absorber material, such as for example, cobalt-doped spinel ($MgAl_2O_4$), glass doped with lead-sulfide (PbS) quantum dots, or vanadium-doped YAG).

FIG. **9** illustrates an example seed laser **400** that includes a laser diode **440** and an optical modulator **460**. In particular embodiments, seed laser **400** may include a laser diode **440** configured to produce CW light and an amplitude modulator **460** configured to receive the CW light and produce optical seed pulses from the received CW light. In particular embodiments, optical modulator **460** may be an electro-absorption modulator (EAM), an electro-optic modulator (EOM), a semiconductor optical amplifier (SOA) modulator, or an acousto-optic modulator (AOM). An EAM may include a semiconductor material configured to modulate the intensity of light through a change in optical absorption caused by an applied electric field. An EAM may be switched between a substantially absorbing state and a substantially transmissive state to produce optical pulses from CW light supplied by laser diode **440**. An EOM may include an electro-optic material (e.g., lithium niobate, lithium tantalite, ammonium dihydrogen phosphate, potassium titanyl phosphate, potassium di-deuterium phosphate, β-barium borate, or a suitable organic polymer) that exhibits the electro-optic effect in which the material's refractive index changes in response to an applied electric field. As an example, the EOM may be a fiber-coupled device that includes an optical interferometer formed by waveguides fabricated into a lithium-niobate substrate, where the optical transmission through the device is modulated by changing the voltage applied across one arm of the interferometer. A

SOA may include a semiconductor gain medium that is substantially opaque or absorbing when in an off state (e.g., when little or no electrical current is applied to the SOA) and that is transparent or amplifying when current above a threshold current is applied. By pulsing the current that drives the SOA, the SOA can produce output optical pulses from CW light supplied by laser diode **440**. An AOM may include a piezoelectric transducer attached to an optical material, and the piezoelectric material may be used to excite sound waves in the optical material that diffract or deflect the direction of an optical beam.

In particular embodiments, modulator **460** may have an extinction ratio of greater than or equal to 10 dB, 20 dB, 30 dB, 40 dB, or any other suitable value. The extinction ratio is an on/off ratio that represents the amount of light transmitted through the modulator **460** in an on state versus an off state. As an example, if modulator **460** transmits 10 μW of average power in an on state and 10 nW of average power in an off state, then modulator **460** has an extinction ratio of 30 dB (which corresponds to 0.1% of optical leakage in the off state).

In particular embodiments, optical modulator **460** may be an external modulator coupled to laser diode **440** by optical fiber. As an example, optical modulator **460** may be a fiber-coupled EAM, EOM, or SOA configured to receive CW light from laser diode **440** on an input optical fiber and produce optical pulses on an output optical fiber. In particular embodiments, optical modulator **460** may be integrated into the semiconductor structure of laser diode **440** or integrated into the packaging of laser diode **440**. As an example, laser diode **440** may have a semiconductor gain region configured to produce CW light, and the gain region may be adjacent to a SOA or EA region that modulates the CW light. In particular embodiments, laser diode **440** may be driven by a DC current source (not illustrated in FIG. **9**) to produce CW light, and modulator **460** may be driven by a pulse generator **430** which in turn is triggered or driven by a function generator **420**. In FIG. **9**, function generator **420** may produce voltage pulses, and pulse generator **430** may drive the modulator **460** with voltage or current pulses that correspond to the pulses from the function generator **420**. In particular embodiments, function generator **420** and pulse generator **430** may be two separate devices, or function generator **420** and pulse generator **430** may be integrated together into a single device.

FIG. **10** illustrates an example seed laser **400** that includes a laser diode **440** driven by a pulse generator **430**A and an optical modulator **460** driven by another pulse generator **430**B. In particular embodiments, seed laser **400** may include a laser diode **440** configured to produce longer-duration optical pulses (e.g., $\tau \cong 2\text{-}20$ ns duration) and an amplitude modulator **460** configured to receive the longer-duration pulses and produce shorter-duration seed pulses (e.g., $\Delta t \cong 0.2\text{-}2$ ns duration) from the received pulses. In the example of FIG. **10**, laser diode **440** produces optical pulses with a duration of τ, and modulator **460** selectively transmits a portion of the laser-diode pulses to produce output optical seed pulses with a duration of Δt, where $\Delta t < \tau$ (e.g., $\tau \cong 5$ ns and $\Delta t \cong 500$ ps). In particular embodiments, the laser-diode pulses may have any suitable duration τ (e.g., 1 ns, 2 ns, 5 ns, 10 ns, or 20 ns), and the optical seed pulses may have any suitable duration Δt (e.g., 100 ps, 200 ps, 400 ps, 600 ps, 1 ns, or 2 ns), where $\Delta t < \tau$.

In FIG. **10**, function generator **420** supplies voltage signals **422**A and **422**B to pulse generators **430**A and **430**B, respectively. Function generator **420** may supply a pulsed voltage signal **422**A to pulse generator **430**A, and pulse generator **430**A may drive laser diode **440** with a corresponding pulsed current signal **432**A. Function generator **420** may also supply a pulsed voltage signal **422**B to pulse generator **430**B, and pulse generator **430**B may drive modulator **460** with a corresponding pulsed voltage or current signal **432**B. The pulsed signal **432**A may include current pulses with a duration of approximately τ, and the pulsed signal **432**B may include current or voltage pulses with a duration of approximately Δt, where $\Delta t < \tau$ (e.g., $\tau \cong 5$ ns and $\Delta t \cong 500$ ps). Additionally, a rising edge of a pulse of signal **432**B may be delayed by a delay time T with respect to a rising edge of a corresponding pulse of signal **432**A. In particular embodiments, function generator **420** may be a single device with two outputs, or function generator **420** may include two separate function generators (e.g., a master function generator and a slave function generator, where the output of the slave function generator is triggered by or based on the output of the master). In particular embodiments, function generator **420** and pulse generators **430**A and **430**B may each be separate devices, or two or three of these devices may be integrated together into a single device.

In particular embodiments, seed laser **400** may include a laser diode **440** configured to produce optical pulses having a duration τ. The seed laser **400** may also include an optical modulator **460** configured to receive the optical pulses from the laser diode **440** and selectively transmit a portion of each of the received optical pulses to produce output optical seed pulses, where each optical seed pulse has a duration less than τ. In FIG. **10**, the laser diode **440** produces an optical pulse with a duration τ, and the modulator selects a portion of the laser-diode pulse to produce a seed pulse with a duration of Δt, where $\Delta t < \tau$. The selected portion of the laser-diode pulse may be delayed by delay T with respect to the rising edge of the laser-diode pulse. In FIG. **10**, the selected portion of the laser-diode pulse includes the portion of the laser-diode pulse between the two vertical dashed lines having a Δt separation, where one line is delayed by delay T with respect to the rising edge of the laser-diode pulse. As an example, the laser-diode pulse may have a duration τ of 5 ns, and the seed pulse may have a duration Δt of 0.5 ns. If the delay time T is 2 ns, then modulator **460** may transmit the portion of the laser-diode pulse from approximately 2 ns to 2.5 ns after the rising edge of the laser-diode pulse.

As illustrated in FIG. **10**, an optical pulse emitted by laser diode **440** may include one or more initial spikes or oscillations in intensity followed by a plateau region with a substantially uniform intensity. In particular embodiments, modulator **460** may transmit a portion of a plateau region of the laser-diode pulse, resulting in an emitted seed pulse that may be substantially uniform or stable (e.g., the seed pulse may exhibit little or no intensity spikes or oscillations). Additionally, the seed pulse may exhibit little or no substantial wavelength variation relative to the initial portion of the laser-diode pulse. The modulator **460** is driven to select a slice or portion of the laser-diode pulse by switching from an off state (or, absorptive state) to an on state (or, transmissive state) for a duration of time Δt. In particular embodiments, since laser diode **440** is operating in a pulsed mode (rather than a CW mode), the output seed pulses may exhibit little or no presence of leakage light during the time between successive seed pulses.

In particular embodiments, the modulator **460** may be driven in a digital fashion between on and off states. As an example, the modulator **460** may be driven from an absorbing state to a transmitting state and then back to an absorbing state, which may result in a seed pulse with a substantially

square shape (as illustrated in the example of FIG. **10**). In particular embodiments, the modulator **460** may be driven in an analog fashion to produce seed pulses with other suitable shapes, such as for example, triangular, Gaussian, or arbitrary shapes. As an example, the modulator **460** may be driven relatively gradually from an absorbing state to a transmitting state to produce a seed pulse with a gradually rising front edge. Similarly, the modulator **460** may be driven relatively gradually from a transmitting state to an absorbing state to produce a seed pulse with a gradually falling trailing edge.

FIG. **11** illustrates an example seed laser **400** with multiple laser diodes (**440-1**, **440-2**, . . . , **440**-N) that are combined together by a multiplexer **412**. In particular embodiments, seed laser **400** may include multiple laser diodes **440** configured to operate at multiple different wavelengths and an optical multiplexer **412** configured to combine the light produced by each laser diode **440** into a single output optical fiber. As an example, seed laser **400** may include N laser diodes **440** configured to operate at N different wavelengths. In particular embodiments, each laser diode **440** may be a pulsed laser diode driven by a separate pulse generator **430** (not illustrated in FIG. **10**). As an example, N separate pulse generators **430** may each be driven or triggered by a separate function generator **420** (not illustrated in FIG. **10**). The function generators **420** may operate independently or may be synchronized with respect to one another so that the pulses can be emitted with a particular time delay between successive pulses. As another example, the N pulse generators **430** may be driven by a single function generator **420** that has N trigger-signal outputs. Additionally, the function generator **420** may have N−1 electrical delays so that the pulses from each laser diode **440** can be synchronized or time-delayed with respect to one another. In particular embodiments, any suitable number of function generators **420**, pulse generators **430**, or electrical delays may be integrated together into a single device.

In particular embodiments, multiplexer **412** may be referred to as a wavelength combiner, a mux, or a wavelength division multiplexer (WDM). In particular embodiments, multiplexer **412** may be similar to demultiplexer **410** described above, where the direction of light in multiplexer **412** is reversed with respect to demultiplexer **410**. As an example, multiplexer **412** may have N input ports coupled to N laser diodes **440**, and multiplexer **412** may combine light from the input ports together into a single output port. In particular embodiments, a N×1 multiplexer **412** may perform wavelength combining using a prism, diffraction grating, holographic grating, arrayed waveguide grating, or one or more dichroic filters. In particular embodiments, seed laser **400** may include N optical amplifiers (not illustrated in FIG. **10**). As an example, each laser diode **440** may be coupled to an optical amplifier located between the laser diode and the multiplexer **412**. The optical amplifiers may be configured to amplify the light from each laser diode **440** separately prior to combining in multiplexer **412**.

In particular embodiments, the N laser diodes **440** may produce optical pulses at N respective wavelengths, and each laser diode **440** may produce pulses at a pulse repetition frequency f. Additionally, the pulses produced by each of the laser diodes **440** may be synchronized so that after being combined together by multiplexer **412** the output seed pulses include N sets of time-interleaved pulses which are substantially evenly spaced in time. As an example, each laser diode **440** may emit pulses that are delayed with respect to pulses from a preceding laser diode **440** by a time delay of 1/(f×N). The pulses from the N laser diodes **440** may be combined by the N×1 multiplexer **412**, resulting in an output seed-laser repetition frequency of f×N. As an example, seed laser **400** may include N=8 laser diodes **440**, and each laser diode **440** may produce pulses at a f=640-kHz pulse repetition frequency with a time delay relative to pulses emitted by a preceding laser diode **440** of 1/(640 kHz×8)≅195 ns. This results in an output seed-laser repetition frequency of approximately 5.12 MHz with a pulse period of approximately 195 ns. In particular embodiments, the output seed-laser pulses may be sent to a fiber-optic amplifier for amplification. A fiber-optic amplifier may exhibit improved performance (e.g., reduced amplified spontaneous emission) when amplifying the output seed-laser pulses due to the higher pulse repetition frequency and higher duty cycle provided by combining pulses from multiple laser diodes **440** into a single pulse stream for amplification. Additionally, undesirable nonlinear effects in optical fiber may be reduced or avoided by interleaving the pulses in a time-synchronized manner so that the pulses do not overlap in time.

FIG. **12** illustrates an example wavelength-dependent delay line **500**. In particular embodiments, a lidar system **100** may include a wavelength-dependent delay line **500** configured to receive input light that includes the N operating wavelengths of the lidar system **100** and produce time-delayed output light. The delay line **500** imparts a wavelength-dependent time delay so that the time-delayed output light includes the input light where each wavelength of input light experiences a particular time delay based on its wavelength. In the example of FIG. **12**, the delay line **500** includes an optical circulator **510**, N fiber Bragg gratings (FBGs) **520**, and N−1 fiber delays **530**. In particular embodiments, circulator **510** may be a three-port fiber-optic component that directs light that enters at one port out to another port. In FIG. **12**, light entering at port **1** (the input of delay line **500**) is directed to port **2**, and light entering at port **2** is directed to port **3** (the output of delay line **500**).

In particular embodiments, a FBG **520** may be a fiber-optic component that includes a periodic variation in the refractive index of the fiber core (e.g., a distributed Bragg reflector, an apodized grating, or a chirped fiber Bragg grating) which acts as a wavelength-specific reflector. Each FBG **520** corresponds to a particular operating wavelength of the lidar system **100** and is configured to reflect that particular operating wavelength and transmit the other wavelengths of the lidar system **100**. As an example, laser **300** or seed laser **400** may produce optical pulses at N different wavelengths (e.g., wavelengths λ_1, λ_2, . . . , λ_N), and delay line **500** may include N FBGs **520** corresponding to each of the N wavelengths. FIG. **12** includes example reflection spectra for each of the FBGs **520** where the x-axis corresponds to wavelength and the y-axis corresponds to reflected optical power (P_R). FBG-λ1 reflects light at wavelength λ1 (over a Δλ bandwidth) and transmits light at other wavelengths. Similarly, FBG-λ2, FBG-λ3, and FBG-λN each reflect light at wavelengths λ2, λ3, and λN, respectively. Each FBG **520** may have any suitable reflectively (e.g., reflectivity greater than or equal to 50%, 75%, 90%, 95%, 99%, or 99.9%) over any suitable bandwidth (e.g., Δλ may be approximately 0.1 nm, 0.2 nm, 0.5 nm, 1 nm, 5 nm, 10 nm, or 20 nm). As an example, FBG-λ1 may have a reflectivity of greater than 99% over a 0.5-nm bandwidth centered at 1550.1 nm.

In particular embodiments, delay line **500** may include multiple FBGs **520** arranged in series and separated from one another by a fiber delay **530**, where fiber delay **530** is a particular length of optical fiber corresponding to a particu-

lar round-trip delay time ΔT. The length L of fiber delay **530** may be related to a time delay ΔT between pulses reflected by successive FBGs **520** based on the expression $2 \cdot L = \Delta T \cdot c/n$, where n is the refractive index experienced by light traveling through the fiber delay **530**. As an example, a time delay of approximately 195 ns can be achieved with an optical fiber having a refractive index of 1.44 and a length of 20.3 m. In FIG. **12**, light with wavelength λ1 is reflected by FBG-λ1 and proceeds to the output of delay line **500**. Light with wavelength λ2 passes through FBG-λ1, is reflected by FBG-λ2, and then proceeds to the output with a time delay (relative to the λ1-wavelength light) of approximately ΔT. Light with wavelength λ3 passes through FBG-λ1 and FBG-λ2, is reflected by FBG-λ3, and then proceeds to the output with a time delay (relative to the λ1-wavelength light) of approximately 2. T. Light with wavelength λN passes through the first N−1 FBGs, is reflected by FBG-λN, and then proceeds to the output with a time delay (relative to the λ1-wavelength light) of approximately $(N-1) \cdot \Delta T$. Any light that falls outside the reflection bands of the N FBGs **520** may pass through the FBGs **520**. This outside-band light (which may include undesirable noise or amplified spontaneous emission from an optical amplifier) may be prevented from propagating through the delay line **500** and effectively filtered out from the lidar system **100**.

In particular embodiments, a wavelength-dependent delay line **500** may be included in a seed laser **400** or an optical amplifier, or a wavelength-dependent delay line **500** may be located between a seed laser **400** and an optical amplifier or between two optical amplifiers. In particular embodiments, a wavelength-dependent delay line **500** may be used in a lidar system **100** to separate one broadband pulse of light into N time-delayed pulses of light. As an example, a seed laser **400** (or a seed laser **400** followed by an optical amplifier) may be configured to produce broadband pulses of light with a spectral bandwidth that covers the N operating wavelengths of a lidar system **100**. As an example, a lidar system **100** may operate with N=8 wavelengths of light (e.g., wavelengths $\lambda_1, \lambda_2, \ldots, \lambda_8$), and each pulse produced by seed laser **400** may have an optical spectrum that includes or spans the 8 wavelengths. The seed-laser pulses may be sent to the input of delay line **500**, which may produce 8 pulses at the output, where each of the 8 pulses corresponds to one of the 8 lidar-system operating wavelengths. The 8 pulses may be time delayed with respect to one another according to the length of the respective fiber delays **530**. As an example, delay line **500** may receive broadband input pulses with a pulse repetition frequency f, and the output pulses may have a pulse repetition frequency of f×N and a time delay ΔT between successive output pulses of approximately 1/(f×N). In particular embodiments, each fiber delay **530** may have approximately the same length so that successive output pulses have substantially the same time delay with respect to one another. In particular embodiments, undesirable nonlinear effects in optical fiber may be reduced or avoided by separating a broadband input pulse into multiple output pulses, since the multiple output pulses are separated in time and have reduced peak powers compared to the input pulse.

In particular embodiments, a wavelength-dependent delay line **500** may be used in a lidar system **100** to separate N time-coincident pulses of light into N time-delayed pulses of light. As an example, seed laser **400** may include N laser diodes **400** configured to produce pulses at N different wavelengths with little or no substantial time delay between the pulses. The seed-laser pulses may be triggered by a signal from a single-output function generator **420** so that the pulses are emitted at substantially the same time. The N time-coincident pulses may be passed through a delay line **500** to produce N pulses separated from one another by a particular time delay according to wavelength.

FIG. **13** illustrates an example lidar system **100** that includes a seed laser **400**, amplifier **470**, and sensor **310**. In particular embodiments, a lidar system **100** may include one or more seed lasers **400**, one or more amplifiers **470**, or one or more sensors **310**. In particular embodiments, seed laser **400** may include (1) a laser diode (e.g., a DFB laser) driven by a pulse generator **430**, (2) a wavelength-tunable laser configured to produce light at multiple wavelengths, (3) multiple laser diodes **440** configured to produce light at multiple respective wavelengths, or (4) any other suitable laser source. In particular embodiments, seed laser **400** may produce low-power optical pulses, and one or more optical amplifiers **470** may be configured to amplify the low-power pulses to produce amplified pulses of light. The amplified pulses of light may correspond to optical pulses emitted by laser **300**. As an example, amplifier **470** may receive optical seed pulses having an average power of greater than or equal to 1 microwatt, and the amplified output pulses from the amplifier **470** may have an average power of greater than or equal to 1 mW. As another example, amplifier **470** may receive optical seed pulses having a pulse energy of greater than or equal to 1 pJ, and the amplified output pulses from the amplifier **470** may have a pulse energy of greater than or equal to 0.1 μJ.

In particular embodiments, an amplifier **470** may be referred to as a fiber amplifier, optical amplifier, fiber-optic amplifier, optical amp, or amp. In particular embodiments, all or part of an amplifier **470** may be included in a laser **300**, an optical link **330**, or a sensor head **310**. In particular embodiments, an amplifier **470** may include any suitable number of optical-amplification stages. As an example, an amplifier **470** of a lidar system **100** may include 1, 2, 3, 4, or 5 optical-amplification stages. In particular embodiments, amplifier **470** may include a single-pass amplifier in which light makes one pass through the amplifier **470**. In particular embodiments, amplifier **470** may include a double-pass amplifier in which light makes two passes through the amplifier gain medium. In particular embodiments, amplifier **470** may act as a preamplifier (e.g., an amplifier that amplifies seed pulses from a laser diode **440** or a seed laser **400**), a mid-stage amplifier (e.g., an amplifier that amplifies light from another amplifier), or a booster amplifier (e.g., an amplifier that sends output light to a scanner **120** or a sensor head **310**). A preamplifier may refer to the first amplifier in a series of two or more amplifiers, a booster amplifier may refer to the last amplifier in a series of amplifiers, or a mid-stage amplifier may refer to any amplifier located between a preamplifier and a booster amplifier.

In particular embodiments, amplifier **470** may provide any suitable amount of optical power gain, such as for example, a gain of approximately 5 dB, 10 dB, 20 dB, 30 dB, 40 dB, 50 dB, 60 dB, or 70 dB. As an example, amplifier **470** (which may include two or more separate amplification stages) may receive pulses with a 1-μW average power and produce amplified pulses with a 5-W average power, corresponding to an optical power gain of approximately 67 dB. As another example, amplifier **470** may include two or more amplification stages each having a gain of greater than or equal to 20 dB, corresponding to an overall gain of greater than or equal to 40 dB. As another example, amplifier may include three amplification stages having gains of approximately 30 dB, 20 dB, and 10 dB, respectively, corresponding to an overall gain of approximately 60 dB.

FIG. **14** illustrates an example spectrum of an optical signal before and after passing through a spectral filter. In particular embodiments, a spectral filter, which may be referred to as an optical filter, may include an absorptive filter, dichroic filter, long-pass filter, short-pass filter, or band-pass filter. In particular embodiments, a spectral filter may be substantially transmissive to light over a particular range of wavelengths (e.g., a pass-band) and may substantially block (e.g., through absorption or reflection) the transmission of light outside of the pass-band range. As an example, a spectral filter may be a dichroic filter (which may be referred to as a reflective, thin-film, or interference filter) which includes a substantially transparent optical substrate (e.g., glass or fused silica) with a series of thin-film optical coatings configured to transmit light over a particular wavelength range and reflect other wavelengths of light. As another example, a spectral filter may include a FBG **520** configured to transmit light over a particular pass-band and substantially block light outside of the pass-band. In the example of FIG. **14**, the spectral filter is a band-pass filter with a center wavelength of λ_C and a pass-band from λ_{LO} to λ_{HI}, which corresponds to a filter bandwidth of $\lambda_{HI}-\lambda_{LO}$.

In particular embodiments, a spectral filter may have an optical transmission (within a pass-band) of greater than or equal to 50%, 70%, 80%, 90%, 95%, 99%, or any other suitable transmission value. Additionally, a spectral filter may have an optical transmission of less than or equal to 50%, 20%, 10%, 1%, 0.5%, 0.1%, or any other suitable transmission value for wavelengths outside the pass-band. The optical transmission outside the pass-band may also be expressed in terms of decibels (dB) of attenuation. For example, the filter attenuation for wavelengths outside the pass-band may be greater than or equal to 3 dB, 10 dB, 15 dB, 20 dB, 30 dB, or any other suitable attenuation value. An attenuation value of 20 dB corresponds to blocking approximately 99% of the incident light power and transmission of approximately 1% of incident light. In particular embodiments, a spectral filter may transmit light at one or more operating wavelengths of a lidar system **100** and block or attenuate light away from the transmitted wavelengths by greater than or equal to 3 dB, 10 dB, 15 dB, 20 dB, 30 dB, or any other suitable attenuation value. The light that is away from the transmitted wavelengths may refer to light with a wavelength outside of a pass-band of the spectral filter. As an example, a spectral filter may transmit greater than or equal to 90% of incident light within a spectra-filter pass-band and may block or attenuate light outside of the pass-band by 20 dB. As another example, a spectral filter may have a filter attenuation of greater than or equal to 20 dB for wavelengths between approximately [λ_{LO}−100 nm] and λ_{LO} and wavelengths between approximately λ_{HI} and [λ_{HI}+100 nm].

In particular embodiments, a spectral filter may have any suitable filter bandwidth, such as for example, a filter bandwidth of 0.1 nm, 0.2 nm, 0.5 nm, 1 nm, 2 nm, 5 nm, or 10 nm. As an example, a spectral filter may have a pass-band with a 1-nm bandwidth that is centered about center wavelength 1554.9 nm. In particular embodiments, an optical filter may have a relatively narrow pass-band (e.g., a spectral-filter bandwidth of less than or equal to 0.05 nm, 0.1 nm, 0.2 nm, 0.5 nm, or 1 nm), and a laser diode **440** of the lidar system **100** may be temperature stabilized so that the laser-diode operating wavelength is matched to the spectral-filter pass-band. In particular embodiments, an optical filter may have a relatively broad pass-band (e.g., a spectral-filter bandwidth of greater than or equal to 1 nm, 2 nm, 5 nm, 10 nm, 20 nm, or 50 nm), and a laser diode **440** may not require temperature stabilization to maintain its operating wavelength within the spectral-filter pass-band.

In particular embodiments, an optical spectrum before passing through a spectral filter may include a signal spectrum along with background optical noise, which may include amplified spontaneous emission (ASE) originating from an amplifier **470**. In FIG. **14**, the signal spectrum, which may represent the spectrum for a series of optical pulses, is centered at wavelength λ_C and has a bandwidth of $\delta\lambda$. The signal spectrum is contained within the pass-band of the spectral filter and passes through the filter with little or no attenuation (e.g., ≤10% attenuation). Similarly, the optical pulses associated with the signal spectrum may pass through the filter with little or no attenuation or distortion to their shape. In FIG. **14**, the optical spectrum before passing through the spectral filter includes a broadband offset associated with ASE. In particular embodiments, an ASE spectrum may extend over a wavelength range of approximately 20 nm, 40 nm, 60 nm, or 80 nm (e.g., from approximately 1510 nm to approximately 1590 nm). The portion of the ASE that falls outside the spectral-filter pass-band may be substantially attenuated, as indicated by the after-spectral-filter spectrum illustrated in FIG. **14** where wavelengths less than λ_{LO} and greater than λ_{HI} are attenuated after passing through the spectral filter. In particular embodiments, a spectral filter may be used to reduce or substantially remove unwanted optical signals or noise (e.g., ASE) from a laser **300**, seed laser **400**, or amplifier **470** of a lidar system **100**. As an example, an optical filter may be located at or near an output of an optical amplifier **470**, and the filter may be configured to remove any suitable amount of the ASE from the amplifier output **470**, such as for example, 50%, 60%, 80%, 90%, 95%, or 99% of the ASE. As another example, an optical filter with a 1-nm bandwidth that receives a signal with background optical noise that extends over approximately 50 nm may remove approximately 94% to 98% of the background noise from the signal.

In particular embodiments, a spectral filter may have a single pass-band (e.g., 1550-1552 nm) or two or more distinct pass-bands (e.g., 1550-1552 nm and 1555-1557 nm). As an example, for a lidar system **100** with N operating wavelengths, a spectral filter may have N pass-bands corresponding to each of the N operating wavelengths. In particular embodiments, the center wavelength λ_C or the bandwidth $\delta\lambda$ of a spectral filter may be substantially fixed. In particular embodiments, a spectral filter may have an adjustable center wavelength λ_C or an adjustable bandwidth $\delta\lambda$. As an example, the center wavelength of a spectral filter may be dynamically changed to match the changing wavelength of a wavelength-tunable seed laser **400** or laser diode **440**.

FIG. **15** illustrates example optical pulses before and after the pulses pass through a temporal filter. In particular embodiments, optical pulses from a laser diode **440**, seed laser **400**, laser **300**, or amplifier **470** may be passed through a temporal filter to reduce or remove inter-pulse noise (e.g., optical noise located temporally between successive pulses). In particular embodiments, a temporal filter may have a transmitting state (which may be referred to as an "on" or "open" state) and a non-transmitting state (which may be referred to as an "off" or "closed" state). A temporal filter in the transmitting state may be substantially transmissive or may allow light to propagate through the filter with minimal attenuation (e.g., the filter may have an optical transmission of greater than or equal to 70%, 80%, 90%, 95%, or 99%). In the non-transmitting state, the filter may be substantially opaque or blocking (e.g., the filter may have an optical

transmission less than or equal to 20%, 10%, 2%, 1%, 0.5%, or 0.1%). As an example, when a temporal filter is in a non-transmitting state, an optical signal (e.g., ASE) may be substantially prevented from being transmitted through the filter (e.g., the optical signal may experience an attenuation of greater than or equal to 10 dB, 20 dB, 30 dB, 40 dB, or any other suitable attenuation value).

In particular embodiments, a temporal filter may be configured to be in a transmitting state when an optical pulse is present and to be in a non-transmitting state otherwise. As an example, an optical amplifier **470** may receive and amplify pulses from a seed laser **400**, and a temporal filter located at the output of the amplifier **470** may be switched between transmitting and non-transmitting states according to when an amplified seed pulse is present. The temporal filter may receive a trigger signal from seed laser **400** or function generator **420** indicating when the filter should switch from non-transmitting to transmitting or from transmitting to non-transmitting. In the example of FIG. **15**, the pulses before passing through a temporal filter have a pulse width of Δt and an amount of ASE offset noise (e.g., ASE produced by an amplifier **470**). After passing through the temporal filter, the pulses retain their duration and overall shape, and the amount of ASE noise between successive pulses is reduced. When a pulse is present (e.g., when a pulse is incident on or traveling through the temporal filter), the filter is in the open state, and when there is no pulse present, the filter switches to the closed state. In particular embodiments, a temporal filter may be configured to be open for a duration of time that is greater than or equal to the pulse duration Δt. As an example, a temporal filter may be configured to be open for a period of time approximately equal to Δt, 2Δt, 3Δt, SΔt, or 10Δt. Δs another example, a temporal filter may be open for a 2Δt window of time, where the window is approximately centered on the time when the pulse is present.

In particular embodiments, a temporal filter, which may be referred to as an optical filter, may include an optical switch, a SOA device, or an electro-absorption (EA) device. As an example, a temporal filter may include an on/off optical switch that employs any suitable switching mechanism (e.g., mechanical switching, piezoelectric switching, thermal switching, liquid-crystal switching, switching with a MEMS device, or switching between waveguides in a PLC) to selectively switch between allowing light to pass through the switch and blocking or preventing light from being transmitted through the switch. As another example, a temporal filter may include a SOA device that is substantially opaque or absorbing when in a non-transmitting state (e.g., when little or no electrical current is applied to the SOA device) and that is transparent or amplifying when current above a threshold current is applied. As another example, a temporal filter may include an EA device that blocks or transmits light through a change in optical absorption caused by an electric field applied to a semiconductor material.

In particular embodiments, an optical filter may include a spectral filter, a temporal filter, or a combination of a spectral filter and a temporal filter. As an example, an optical filter may include a series combination of a spectral filter and a temporal filter (e.g., a spectral filter followed by a temporal filter, or vice versa). In particular embodiments, lidar system **100** may include one or more spectral filters or one or more temporal filters. As an example, one or more spectral or temporal filters may be included in laser **300**, sensor **310**, optical link **330**, seed laser **400**, or amplifier **470**. As another example, one or more optical filters may be located at an input or output of an amplifier **470**. In particular embodiments, a lidar system **100** may include one or more optical filters, where each optical filter is configured to reduce an amount of ASE light produced by one or more optical amplifiers **470**. As an example, one or more optical filters may be located at the output of an amplifier **470** to reduce the amount of ASE from the amplifier **470** that propagates beyond the amplifier **470**. In particular embodiments, a lidar system **100** may include an optical amplifier **470** that includes one or more optical filters, where each optical filter is configured to reduce an amount of ASE light produced by the optical amplifier **470**. In particular embodiments, a lidar system **100** that includes one or more optical filters may exhibit a reduced amount of optical or electrical noise relative to a lidar system without optical filters. In particular embodiments, a laser system or amplifier **470** that includes one or more optical filters or optical isolators may be substantially prevented from producing unwanted light (e.g., through Q-switching or self lasing) when no optical pulse is present. As an example, during a time between successive optical pulses, one or more optical filters or isolators may prevent an amplifier **470** from emitting a Q-switched pulse.

FIG. **16** illustrates an example double-pass fiber-optic amplifier **470**. In particular embodiments, an optical amplifier **470** may receive light at its input, amplify the input light, and send the amplified light to an output. The received input light may include optical pulses from a seed laser **400** or from a previous amplification state (e.g., two or more amplifiers **470** may be coupled together in series). The amplified output light may be sent to another amplifier **470** (e.g., to provide another stage of amplification), a demultiplexer **410** (e.g., for distribution to multiple optical links **330** or multiple sensor heads **310**), an optical link **330**, or a sensor head **310**. In particular embodiments, an amplifier **470** may be part of a master oscillator power amplifier (MOPA) or master oscillator fiber amplifier (MOFA) in which a master oscillator (e.g., a seed laser **400**) sends relatively low-power optical pulses to one or more optical amplifiers **470** for amplification. As an example, an amplifier **470** may receive pulses with an input pulse energy (E_{in}) of approximately 10 pJ and produce amplified pulses with an output pulse energy (E_{out}) of approximately 10 nJ. The optical gain (G) of the amplifier **470** in decibels, which may be determined from the expression $G=10 \log(E_{out}/E_{in})$, is approximately 30 dB. As another example, an amplifier **470** may receive input pulses with a peak power (P_{in}) of approximately 10 W and produce amplified output pulses with a peak power (P_{out}) of approximately 1 kW. The optical gain (G) of the amplifier **470**, which may be determined from the expression $G=10 \log(P_{out}/P_{in})$, is approximately 20 dB.

In particular embodiments, an optical amplifier **470** may include one or more circulators **510**, one or more couplers (**600**A, **600**B), one or more photodiodes (PD **610**A, PD **610**B), one or more isolators (**620**A, **620**B), one or more filters **630**, one or more pump lasers **640**, one or more pump WDMs **650**, one or more gain fibers **660**, or one or more reflectors **670**. The double-pass amplifier **470** illustrated in FIG. **16** includes an input coupler **600**A and photodiode (PD) **610**A, an input isolator **620**A, a circulator **510**, a pump laser **640** and pump WDM **650**, a gain fiber **660**, a reflector **670**, an output isolator **620**B, an output coupler **600**B and PD **610**B, and an output filter **630**. In the example of FIG. **16**, after passing through the coupler **600**A and isolator **620**A, the input light is directed from port **1** to port **2** of circulator **510** and then travels through pump WDM **650** and gain fiber **660**. The light is reflected by reflector **670** and travels back through gain fiber **660** and pump WDM **650**.

During the two passes through the gain fiber **660**, the input light undergoes amplification through a process of stimulated emission. The amplified light is directed from port **2** to port **3** of the circulator where it then travels through isolator **620**B, coupler **600**B, and filter **630**. The amplified light is directed to the output of amplifier **470**, at which point the amplified output light may be sent to another amplifier **470**, a demultiplexer, an optical link **330**, or a sensor head **310**.

In particular embodiments, a fiber-optic amplifier **470** may include a gain fiber **660** that is optically pumped (e.g., provided with energy) by a pump laser **640**. The optically pumped gain fiber **660** provides optical gain to particular wavelengths of light traveling through the gain fiber **660**. The pump light and the light to be amplified may both propagate substantially through the core of the gain fiber **660**. The gain fiber **660** may be an optical fiber doped with rare-earth ions, such as for example erbium (Er), neodymium (Nd), ytterbium (Yb), praseodymium (Pr), holmium (Ho), thulium (Tm), dysprosium (Dy), any other suitable rare-earth element, or any suitable combination thereof. The rare-earth dopants absorb light from the pump laser **640** and are "pumped" or promoted into excited states that provide amplification to particular wavelengths of light through stimulated emission. The rare-earth ions in excited states may also emit photons through spontaneous emission, resulting in the production of ASE light by amplifier **470**. In particular embodiments, an amplifier **470** with erbium-doped gain fiber **660** may be referred to as an erbium-doped fiber amplifier (EDFA) and may be used to amplify light having wavelengths between approximately 1520 nm and approximately 1600 nm. In particular embodiments, a gain fiber **660** may be doped with a combination of erbium and ytterbium dopants and may be referred to as a Er:Yb co-doped fiber, Er:Yb:glass fiber, Er:Yb fiber, Er:Yb-doped fiber, or erbium/ytterbium-doped fiber. An amplifier **470** with Er:Yb co-doped gain fiber may be referred to as an erbium/ytterbium-doped fiber amplifier (EYDFA). An EYDFA may be used to amplify light having wavelengths between approximately 1520 nm and approximately 1620 nm. In particular embodiments, a gain fiber **660** doped with ytterbium may be part of a ytterbium-doped fiber amplifier (YDFA). A YDFA may be used to amplify light having wavelengths between approximately 1000 nm and approximately 1130 nm. In particular embodiments, a gain fiber **660** doped with thulium may be part of a thulium-doped fiber amplifier (TDFA). A TDFA may be used to amplify light having wavelengths between approximately 1900 nm and approximately 2100 nm.

In particular embodiments, a fiber-optic amplifier **470** may refer to an amplifier where light is amplified while propagating through a gain fiber **660** (e.g., the light is not amplified while propagating as a free-space beam). In particular embodiments, an amplifier **470** where the light being amplified makes one pass through a gain fiber **660** may be referred to as a single-pass amplifier **470** (as described below), and an amplifier **470** where the light being amplified makes two passes through a gain fiber **660** (as illustrated in FIG. **16**) may be referred to as a double-pass amplifier **470**. In particular embodiments, the length of gain fiber **660** in an amplifier **470** may be 0.5 m, 1 m, 2 m, 4 m, 6 m, 10 m, 20 m, or any other suitable gain-fiber length. In particular embodiments, gain fiber **660** may be a SM or LMA optical fiber with a core diameter of approximately 7 μm, 8 μm, 9 μm, 10 μm, 12 μm, 20 μm, 25 μm, or any other suitable core diameter. The numerical aperture (NA), composition, or refractive indices of the components of an optical fiber may be configured so that the optical fiber remains in single-mode operation for the wavelength of light propagating through the fiber. In the example of FIG. **16** (as well as some of the other figures described herein), a line or an arrow between two optical components may represent a fiber-optic cable. As an example, coupler **600**A and isolator **620**A may be coupled together by a fiber-optic cable represented by the arrow that connects the two components. As another example, the input and output illustrated in FIG. **16** may each represent a fiber-optic cable.

In particular embodiments, pump laser **640** may produce light at any wavelength suitable to provide optical excitation to the dopants of gain fiber **660**. As an example, pump laser **640** may be a fiber-coupled laser diode with an operating wavelength of approximately 908 nm, 915 nm, 940 nm, 960 nm, 976 nm, 980 nm, 1050 nm, 1064 nm, 1450 nm, or 1480 nm. As another example, an erbium-doped or erbium/ytterbium-doped gain fiber **660** may be pumped with a 976-nm laser diode. In particular embodiments, pump laser **640** may be operated as a CW light source and may produce any suitable amount of average optical pump power, such as for example, approximately 100 mW, 500 mW, 1 W, 2 W, 5 W, or 10 W of pump power. In particular embodiments, light from pump laser **640** may be coupled into gain fiber **660** via a pump wavelength-division-multiplexer (WDM) **650**. A pump WDM **650** may refer to a three-port device that combines input-amplifier light at port **1** having a particular wavelength with pump light at port **2** having a different wavelength and sends the combined light out port **3**. As an example, the input-amplifier light may have a wavelength of approximately 1530-1565 nm and may be combined by pump WDM **650** with pump-laser light having a wavelength of approximately 975-985 nm. The combined light is then coupled to gain fiber **660**, where the pump-laser light pumps the gain fiber **660**, and the input-amplifier light is amplified. The input-amplifier light makes a first pass through the gain fiber, is reflected by reflector **670**, and then makes a second pass through the gain fiber **660**. The amplified light then passes through pump WDM **650** and back to port **2** of the circulator **510** where it is sent to port **3**.

In particular embodiments, reflector **670** may include a mirror or a FBG **520**. As an example, reflector **670** may include a metallic or dielectric mirror configured to receive light from gain fiber **660** and reflect the received light back into the gain fiber **660**. As another example, reflector **670** may include one or more FBGs **520** configured to reflect light corresponding to one or more operating wavelengths of lidar system **100** and transmit or attenuate light that is away from the reflected wavelengths. For example, reflector **670** may include a FBG **520** that reflects light between approximately 1400 nm to approximately 1440 nm and transmits light over the wavelength ranges of approximately 1300-1400 nm and approximately 1440-1540 nm. In particular embodiments, a double-pass amplifier **470** may include a circulator **510**, a gain fiber **660** having a first end and a second end, and a FBG **520**, where the first end of the gain fiber **660** is coupled to the circulator **510** and the second end is coupled to the FBG **520**. In FIG. **16**, the upper end of gain fiber **660** is coupled to port **2** of circulator **510** via pump WDM **650**, and the lower end of gain fiber **660** is coupled to reflector **670**, which may include one or more FBGs **520**.

In particular embodiments, reflector **670** may include a FBG **520** that reflects light at the wavelength of the input light that is received and amplified by amplifier **470**. As an example, amplifier **470** may receive pulses of light having a wavelength of approximately 1552 nm, and reflector **670** may include a FBG **520** configured to reflect light at 1552 nm. The FBG **520** may be similar to the FBGs **520** described

above with respect to FIG. **12**. The FBG **520** may have any suitable reflectively (e.g., reflectivity greater than or equal to 50%, 75%, 90%, 95%, 99%, or 99.9%) over any suitable bandwidth (e.g., Δλ, may be approximately 0.1 nm, 0.2 nm, 0.5 nm, 1 nm, 5 nm, 10 nm, or 20 nm). As an example, reflector **670** may include a FBG **520** with a reflectivity of greater than or equal to 99% over a 2-nm bandwidth centered at 1552 nm. As another example, reflector **670** may include a FBG **520** with a reflectivity of greater than or equal to 90% over a 10-nm bandwidth centered at 1550 nm. In particular embodiments, a reflector **670** may include a FBG **520** with a relatively narrow reflectivity range (e.g., the bandwidth Δλ, may be less than or equal to 0.1 nm, 0.2 nm, 0.5 nm, 1 nm, or 2 nm), and lidar system **100** may include a laser diode **440** that is temperature stabilized so that its operating wavelength matches the reflectivity range of the FBG **520**.

In particular embodiments, reflector **670** may include a FBG **520** that reflects light at one or more operating wavelengths and transmits or attenuates light that is away from the one or more operating wavelengths. As an example, the FBG **520** may reflect light from approximately 1555 nm to approximately 1560 nm, and the FBG **520** may transmit light at wavelengths outside that range. In particular embodiments, outside of its range of reflectivity, a FBG **520** may have a reflectivity of less than or equal to 50%, 20%, 10%, 5%, 2%, 1%, 0.5%, or less than any suitable reflectivity value. As an example, a FBG **520** with a reflectivity range of 1555-1560 nm may have a reflectivity of less than or equal to 50% (or, a transmission of greater than or equal to 50%) over the ranges of approximately 1455-1555 nm and approximately 1560-1660 nm. In particular embodiments, out-of-band light (e.g., light that is outside the reflectivity range of a FBG **520**) may be substantially transmitted through the FBG **520**. In FIG. **16**, a reflector **670** that includes a FBG **520** may transmit out-of-band light (e.g., optical noise, such as for example, ASE produced in gain fiber **660**) so that the light is dumped out of the reflector **670** and is not reflected back into the gain fiber **660**. In particular embodiments, a reflector **670** that includes a FBG **520** may act as a spectral filter by removing greater than or equal to 50%, 60%, 80%, 90%, 95%, or 99% of the out-of-band light received by the reflector **670**. As an example, greater than or equal to 90% of ASE light that is produced in the gain fiber **660** and that propagates to reflector **670** may be transmitted through the reflector **670** and effectively removed from the amplifier **470**. In particular embodiments, reflector **670** may include a FBG **520** that reflects light at a pump-laser wavelength (e.g., 976 nm). Light from pump laser **640** that is not absorbed in the gain fiber **660** may be reflected by reflector **670** to make a second pass through the gain fiber **660**. This may result in an improvement in pumping efficiency since a greater fraction of pump-laser light may be absorbed by configuring the pump light to make two passes through the gain fiber **660**.

In particular embodiments, reflector **670** may include two or more FBGs **520** coupled together in series. As an example, reflector **670** may include a wavelength-dependent delay line similar to the wavelength-dependent delay line **500** described above. In particular embodiments, a reflector **670** with a wavelength-dependent delay line may include N FBGs **520** and N−1 fiber delays **530** connected together in series as illustrated in FIG. **12**. As an example, reflector **670** may include a wavelength-dependent delay line that separates a broadband pulse of light into N time-delayed pulses of light or that separates N time-coincident pulses of light into N time-delayed pulses of light. As another example, the input light to the amplifier **470** may include N time-coincident pulses of light having N different wavelengths, and the output light from the amplifier **470** may include N amplified pulses that are time delayed with respect to one another according to wavelength.

In particular embodiments, coupler **600**A may be a fiber-optic splitter or tap coupler that splits off a portion of input light and sends it to PD **610**A. The remaining light that is not split-off propagates on to isolator **620**A. Similarly, coupler **600**B may be a tap coupler that splits off a portion of output light and sends it to PD **610**B with the remaining light proceeding to filter **630**. The tap coupler **600**A or **600**B may couple approximately 0.5%, 1%, 2%, 3%, 5%, 10%, or any other suitable percentage of light to PD **610**A or PD **610**B, respectively. As an example, input coupler **600**A may split off approximately 10% of the input light and direct it to PD **610**A and send the remaining approximately 90% of input light on to the isolator **620**A. As another example, output coupler **600**B may split off approximately 1% of the amplified light and direct it to PD **610**B and send the remaining approximately 99% of the amplified light on to the filter **630**. In particular embodiments, an amplifier **470** may include an input coupler **600**A, an output coupler **600**B, or both an input coupler **600**A and an output coupler **600**B.

In particular embodiments, PD **610**A or **610**B may be a silicon, germanium, or InGaAs PN or PIN photodiode. In particular embodiments, coupler **600**A and PD **610**A may be used to monitor the light coming into the amplifier **470**, and coupler **600**B and PD **610**B may be used to monitor the light after amplification. As an example, PD **610**A may receive the split-off input light from coupler **600**A, and PD **610**A may generate an electrical signal based on the received light. Similarly, PD **610**B may receive the split-off output light from coupler **600**B, and PD **610**B may generate an electrical signal based on the output light. The electrical signal from PD **610**A or PD **610**B may be sent to a processor or controller **150** for monitoring the status of the input or output light, respectively. If a voltage or current of the electrical signal from PD **610**A drops below a particular predetermined threshold level, then a processor or controller **150** may determine that there is insufficient light coming into the amplifier **470**. The amplifier **470** may be shut down or disabled (e.g., the pump laser **640** may be turned off or the amount of light it produces may be reduced) to avoid possible damage to the amplifier **470**. If a voltage or current of the electrical signal from PD **610**B drops below a particular predetermined threshold level, then a processor or controller **150** may determine that there is a problem with amplifier **470** (e.g., there may be a broken optical fiber, pump laser **640** may be failing, or one of the other components in amplifier **470** may be failing). In particular embodiments, signals from PD **610**A or PD **610**B may be used to adjust or monitor the gain or output power of amplifier **470**. As an example, a ratio of signals from PDs **610**A and **610**B may be used to determine the gain of amplifier **470**, and the amplifier gain may be adjusted by changing the pump-laser current (which changes the amount of pump power provided by pump laser **640**). As another example, a signal from PD **610**B may be used to determine the output power of amplifier **470**, and the amplifier output power may be adjusted by changing the current supplied to pump laser **640**.

In particular embodiments, amplifier **470** may include an input optical isolator **620**A or an output optical isolator **620**B. An optical isolator (**620**A, **620**B) may include a Faraday rotator, and the operation of an optical isolator may be based on the Faraday effect where the polarization of light traveling through the isolator is rotated in the same direction

regardless of the direction of travel of the light. In particular embodiments, an optical isolator (**620**A, **620**B) may be a fiber-coupled device configured to reduce or attenuate backward-propagating light. Backward-propagating light may originate from ASE light from a gain fiber **660** or from optical reflections at one or more optical interfaces of the components in amplifier **470**, and the backward-propagating light may destabilize or cause damage to a seed laser **400**, laser diode **440** or amplifier **470**. Isolators **620**A and **620**B in FIG. **16** are configured to allow light to pass in the direction of the arrow drawn in the isolator and block light propagating in the reverse direction. In FIG. **16**, a laser diode **440** may provide the input light to amplifier **470**, and isolator **620**A may significantly reduce the amount of backward-propagating light that travels back to the laser diode **440**. The output of amplifier **470** in FIG. **16** may be coupled to a second amplifier, and isolator **620**B may reduce the amount of light that propagates back into the amplifier **470**.

In FIG. **16**, input isolator **620**A may allow light to propagate from coupler **600**A to port **1** of circulator **510**, but any light propagating in the reverse direction may be attenuated. As an example, back-reflected light propagating from port **1** of circulator **510** to isolator **620**A may be attenuated by greater than or equal to 5 dB, 10 dB, 20 dB, 30 dB, 40 dB, 50 dB, or any other suitable attenuation value. As another example, if isolator **620**A attenuates back-reflected light by greater than or equal to 30 dB, then less than or equal to 0.1% of light propagating from port **1** of circulator **510** may be transmitted through the isolator **620**A and to coupler **600**A. In particular embodiments, circulator **510** may perform an optical isolation function. As an example, amplifier **470** may not include isolator **620**A or **620**B, and circulator **510** may include one or more optical elements that act as an input or output optical isolator.

In particular embodiments, an amplifier **470** may include an optical filter **630**. The output optical filter **630** in FIG. **16** may be configured to remove greater than or equal to 50% of the optical noise propagating toward the amplifier output (e.g., the optical noise may include ASE produced by the gain fiber **660**). In particular embodiments, amplifier **470** may include an optical filter **630** located at the amplifier input, an optical filter **630** located at the amplifier output, or optical filters **630** located at both the input and output of amplifier **470**. In particular embodiments, amplifier **470** may include an optical filter **630** that includes a spectral filter (as described above with respect to FIG. **14**) or a temporal filter (as described above with respect to FIG. **15**). As an example, amplifier **470** may include an optical filter **630** located at the input to amplifier **470**, and the optical filter **630** may include a spectral filter, a temporal filter, or a combination of spectral and temporal filters. An input optical filter **630** may reduce the amount of optical noise (e.g., ASE from a previous amplifier stage) at the input to an amplifier **470**. In the example of FIG. **16**, amplifier **470** includes an optical filter **630** located at the output of amplifier **470**. An output optical filter **630** (which may include a spectral filter, a temporal filter, or a combination of spectral and temporal filters) may reduce the amount of optical noise accompanying the amplified optical pulses that propagate out of amplifier **470**. The optical noise may include ASE from gain fiber **660** that is coupled to port **3** of circulator and toward the amplifier output. As an example, optical filter **630** in FIG. **16** may remove greater than or equal to 80% of the ASE from the output of amplifier **470**.

FIG. **17** illustrates example absorption spectra for erbium and ytterbium ions incorporated into a glass host (e.g., fused silica). Erbium exhibits an absorption spectrum that extends from approximately 950 nm to approximately 1020 nm. Ytterbium exhibits an absorption spectrum that extends from approximately 890 nm to approximately 1020 nm. The erbium and ytterbium ions have a peak absorption between approximately 970 nm and approximately 985 nm. As an example, an erbium-doped or ytterbium-doped fiber amplifier **470** may be pumped with a pump laser **640** having a wavelength of approximately 976 nm or 980 nm.

FIG. **18** illustrates example absorption and emission spectra for a glass host doped with a combination of erbium and ytterbium. The erbium/ytterbium emission spectra extends from approximately 1470 nm to approximately 1630 nm. As an example an EYDFA with Er:Yb-doped gain fiber may be used to amplify light having wavelengths between approximately 1470 nm and approximately 1630 nm.

FIG. **19** illustrates an example single-pass fiber-optic amplifier **470**. In FIG. **19**, input light makes a single pass through the gain fiber **660**, and after passing through the output of amplifier **470**, the amplified output light may be sent to another amplifier **470**, a demultiplexer, an optical link **330**, or a sensor head **310**. In particular embodiments, a single-pass amplifier **470** may include one or more optical filters (e.g., **630**A or **630**B), couplers (e.g., **600**A or **600**B), photodiodes (e.g., **610**A or **610**B), isolators (e.g., **620**A or **620**B), gain fibers **660**, pump lasers (e.g., **640**A or **640**B), or pump WDMs (e.g., **650**A or **650**B). The single-pass amplifier **470** illustrated in FIG. **19** has an input that includes an input filter **630**A, an input coupler **600**A and PD **610**A, and an input isolator **620**A. The optical gain for the amplifier **470** is provided by pump lasers **640**A and **640**B which are coupled to gain fiber **660** through pump WDMs **650**A and **650**B, respectively. The gain fiber **660** in FIG. **19** may be an erbium-doped or erbium/ytterbium-doped gain fiber **660**. The single-pass amplifier **470** illustrated in FIG. **19** has an output that includes an output isolator **620**B, an output coupler **600**B and PD **610**B, and an output filter **630**B.

In particular embodiments, an amplifier **470** may include 1, 2, 3, or any other suitable number of pump lasers **640**. The double-pass amplifier **470** in FIG. **16** includes one pump laser **640**, and the single-pass amplifier **470** in FIG. **19** includes two pump lasers (**640**A, **640**B). In particular embodiments, a double-pass amplifier **470** may include one pump laser **640** (as illustrated in FIG. **16**), or a double-pass amplifier **470** may include two pump lasers **640** (e.g., one pump laser coupled to each end of the gain fiber **660**). In particular embodiments, a single-pass amplifier **470** may have one pump laser (e.g., pump laser **640**A or **640**B), or a single-pass amplifier **470** may have two pump lasers (e.g., pump lasers **640**A and **640**B). In particular embodiments, a pump laser may be co-propagating or counter-propagating with respect to the light that is amplified by an amplifier **470**. In FIG. **19**, pump laser **640**A is a co-propagating pump laser (e.g., the pump-laser light propagates in the same direction as the light that is amplified by the amplifier **470**), and pump laser **640**B is a counter-propagating pump laser (e.g., the pump-laser light propagates in the opposite direction to the light that is amplified). In particular embodiments, one pump laser may be used to provide pump light to both ends of a gain fiber **660**. As an example, pump laser **640**A in FIG. **19** may be split (e.g., with a 3-dB fiber-optic power splitter) into two fibers, where one fiber is coupled to pump WDM **650**A and the other fiber is coupled to pump WDM **650**B. In particular embodiments, two or more pump lasers with different wavelengths may be combined together using a wavelength combiner or a WDM device. As an example, light from a pump laser operating at 974 nm may be combined with light from a pump laser operating at 976 nm,

and the combined 974-nm/976-nm pump light may be coupled into a gain fiber **660**. In particular embodiments, an amplifier **470** that includes multiple pump lasers may provide higher pump power to a gain fiber **660** or may provide redundant pump-laser sources in case one of the pump lasers fails.

FIG. **20** illustrates an example booster amplifier **470** that produces a free-space output beam **125**. In particular embodiments, a booster amplifier **470** may refer to an amplifier that sends an output beam **125** to a scanner **120** or a sensor head **310**, or a booster amplifier **470** may refer to an amplifier that provides a final amplification stage in a series of two or more amplifiers. As an example, booster amplifier **470** in FIG. **20** may receive optical pulses that have been amplified by one or more previous amplifiers (e.g., a single-stage amplifier **470** or a double-stage amplifier **470**), and the booster amplifier **470** may produce a free-space output beam **125** that is directed to a scanner **120** or a sensor head **310**. As another example, booster amplifier **470** may receive unamplified optical pulses (e.g., from a pulsed laser diode), and booster amplifier **470** may provide a single stage of optical amplification prior to sending a free-space output beam **125** to a scanner **120**. In particular embodiments, a booster amplifier **470** may include an output collimator **340** configured to receive amplified optical pulses produced in gain fiber **660** and produce a free-space optical beam **125** that includes the amplified optical pulses. As an example, the booster amplifier **470** in FIG. **20** may be a fiber-optic amplifier that is terminated at output collimator **340**, and output collimator **340** may produce a free-space output beam **125**.

In particular embodiments, a booster amplifier **470** may provide any suitable amount of optical power gain, such as for example, a gain of approximately 3 dB, 5 dB, 7 dB, 10 dB, 15 dB, 20 dB, or 30 dB. As an example, a booster amplifier **470** may receive pulses with a 100-mW average power and produce amplified pulses with a 1-W average power, corresponding to an optical gain of approximately 10 dB. In particular embodiments, a booster amplifier **470** may include a single pump laser **640** (e.g., a co-propagating or counter-propagating pump laser) or two or more pump lasers **640** (e.g., a co-propagating pump and a counter-propagating pump). As an example, a booster amplifier **470** may include a counter-propagating pump laser **640** located on the output side of the amplifier **470**. In FIG. **20**, the booster amplifier **470** includes a co-propagating pump laser **640** (along with a pump WDM **650**) located on the input side of the amplifier **470**.

In particular embodiments, a booster amplifier **470** may include a gain fiber **660** that is a double-clad gain fiber **660**. In particular embodiments, a double-clad gain fiber **660** may include a core, inner cladding, and outer cladding, where the core is doped with a rare-earth material. As an example, the core may be doped with erbium, or the double-clad gain fiber **660** may be a Er:Yb co-doped fiber where the core is doped with a combination of erbium and ytterbium. The refractive indices of the core, inner cladding, and outer cladding may be configured so that the pump-laser light is confined to propagate primarily in the inner cladding, and the amplified light is confined to propagate primarily in the core. In particular embodiments, a double-clad gain fiber **660** may have a core with any suitable diameter, such as for example, a diameter of approximately 7 μm, 8 μm, 9 μm, 10 μm, 12 μm, 20 μm, or 25 μm. In particular embodiments, gain fiber **660** may be a double-clad photonic-crystal fiber that includes a core doped with rare-earth material where the core is surrounded by an arrangement of holes that extend along the length of the gain fiber **660**.

In particular embodiments, amplifier **470** may include a cladding power stripper **680**, which may also be referred to as a cladding mode stripper. A cladding power stripper **680** may be used to absorb or remove light from the inner cladding or outer cladding in a double-clad gain fiber **660**. As an example, cladding power stripper **680** may be located on the opposite side of the gain fiber **660** from the pump laser **640**, and the cladding power stripper **680** may remove residual, unabsorbed pump-laser light that propagates through the gain fiber **660** without being absorbed in the gain fiber **660**. As an example, the residual pump-laser light may be removed from the inner cladding of the gain fiber **660** to prevent the residual pump light from accompanying the amplified pulses as they exit the amplifier **470**. Additionally, the cladding power stripper **680** may remove ASE produced by the gain fiber **660** that propagates in the inner or outer cladding.

FIG. **21** illustrates an example lidar system **100** that includes three amplifiers **470** (amplifier **1**, amplifier **2**, and amplifier **3**). In the example of FIG. **21**, lidar system **100** includes laser **300**, fiber-optic link **330**, and sensor **310**. Laser **300** includes seed laser **400**, amplifier **1**, and the input portion of amplifier **2**, and fiber-optic link **330** includes the gain fiber **660** of amplifier **2**. The sensor head **310** includes amplifier **3** and scanner **120** along with the output portion (e.g., filter **630**B) of amplifier **2**. In particular embodiments, amplifier **1** may be a double-pass amplifier (e.g., similar to the double-pass amplifier **470** illustrated in FIG. **16**), and amplifier **2** may be a single-pass amplifier (e.g., similar to the single-pass amplifier **470** illustrated in FIG. **19**). Amplifier **1** may act as a preamplifier and amplify seed pulses from seed laser **400**. Amplifier **2** may act as a mid-stage amplifier that receives and amplifies the pulses from amplifier **1**. Amplifier **3** may act as a booster amplifier (e.g., similar to the booster amplifier **470** illustrated in FIG. **20**) that provides a final amplification stage and produces a free-space output beam **125** that is sent to scanner **120**. In particular embodiments, light may be coupled into or out of an amplifier **470** by an optical fiber (e.g., a SM fiber, MM fiber, PM fiber, LMA fiber, photonic-crystal fiber, or photonic-bandgap fiber), or light may be coupled into or out of an amplifier by a free-space beam (e.g., an amplifier output may be terminated by a free-space collimator **340**).

In particular embodiments, a lidar system **100** may include a laser **300** with one or more optical amplifiers **470**, and the lidar system **100** may include multiple optical links **330**. Each optical link **330** may include a gain fiber **660** of an optical amplifier **470**, where the gain fiber **660** is distributed along part of or substantially all of the optical link **330**. In FIG. **21**, laser **300** includes amplifier **1**, and optical link **330** includes the gain fiber **660** of amplifier **2**. In FIG. **21**, gain fiber **660** is part of the fiber-optic link **330**, and gain fiber **660** amplifies optical pulses while the pulses are conveyed from laser **300** to sensor **310**. In particular embodiments, each optical link **330** of a lidar system **100** may include a gain fiber **660** of a fiber-optic amplifier **470**, where the gain fiber **660** is configured to amplify pulses of light received from a seed laser **400**, a laser diode **440**, or a previous amplifier **470**. In FIG. **21**, the gain fiber **660** amplifies pulses of light while the light propagates from laser **300** to a corresponding sensor head **310**. Additionally, the gain fiber **660** forms at least part of the optical link **330** between laser **300** and a corresponding sensor head **310**.

In particular embodiments, one or more components of an amplifier **470** may be located in one or more different parts

of lidar system **100**, and the amplifier **470** may be referred to as a distributed amplifier **470**. As an example, a distributed amplifier **470** may include one or more filters **630**, isolators **620**, couplers **600**, PDs **610**, pump lasers **640**, pump WDMs **650**, or gain fibers **660** located at least in part in laser **300**, fiber-optic link **330**, or sensor head **310**. As another example, a distributed amplifier **470** may include one pump laser **640** located in laser **300** or sensor **310** (e.g., the pump laser **640** may be co-propagating or counter-propagating). As another example, a distributed amplifier **470** may include one pump laser **640** located in laser **300** and another pump laser **640** located in sensor **310**. In the example of FIG. **21**, amplifier **2** is a distributed amplifier **470** where input filter **630**A, input isolator **620**, pump laser **640**, and pump WDM **650** are located in laser **300**, and output filter **630**B is located in sensor **310**.

In particular embodiments, a lidar system **100** may include multiple sensor heads **310**, where each sensor head includes one or more optical amplifiers **470** (e.g., a preamplifier, a mid-stage amplifier, or a booster amplifier), which may be referred to as sensor-head amplifiers **470**. A sensor-head amplifier **470** may be configured to receive pulses of light from a corresponding optical link **330** and amplify the received pulses of light. The sensor-head amplifier **470** may amplify pulses of light conveyed to the sensor head **310** by an optical link **330**, and after amplifying the pulses, the sensor-head amplifier **470** may direct the amplified pulses of light to a scanner **120** for scanning across a field of regard of the sensor head **310**. In FIG. **21**, sensor head **310** includes filter **630**B, amplifier **3**, and scanner **120**. Amplifier **3** is a sensor-head amplifier **470** that receives pulses from fiber-optic link **330** via filter **630**B, amplifies the received pulses, and sends the amplified pulses to scanner **120**. In particular embodiments, a sensor-head amplifier **470** may be a fiber-optic amplifier or a free-space amplifier.

In particular embodiments, a lidar system **100** may include a laser system (which may be referred to as a light source) that is contained within a part of the lidar system **100** (e.g., within laser **300**), or a lidar system **100** may include a distributed laser system that is contained within two or more parts of the lidar system **100**. As an example, a laser system that produces and amplifies optical pulses may be located within laser **300** or within sensor head **310**. As another example, one or more parts of a distributed laser system that produces and amplifies optical pulses may be located or contained within laser **300**, fiber-optic link **330**, or sensor head **310**. FIG. **21** illustrates a distributed laser system that includes seed laser **400**, amplifier **1**, amplifier **2**, and amplifier **3**, where parts of the laser system are located in laser **300**, fiber-optic link **330**, and sensor head **310**.

In particular embodiments, a lidar system **100** may include a laser system that includes: a seed laser **400**; a first fiber-optic amplifier **470**; a first optical filter **630**A; and a second fiber-optic amplifier **470**. In particular embodiments, the laser system may also include a second optical filter **630**B, or the laser system may also include a third fiber-optic amplifier **470**. The seed laser **400** may produce optical seed pulses which are amplified by the first amplifier **470** with a first amplifier gain (e.g., 10 dB, 20 dB, 30 dB or 40 dB) to produce a first-amplifier output that includes amplified seed pulses and ASE. The first optical filter **630**A (which may include a spectral filter, a temporal filter, or a combination of a spectral filter and temporal filter) may remove from the first-amplifier output an amount of the ASE (e.g., remove approximately 50%, 60%, 70%, 80%, 90%, 95%, or 99% of the ASE). The second amplifier **470** may receive the amplified seed pulses from the first optical filter and amplify the received pulses by a second amplifier gain (e.g., 10 dB, 20 dB, 30 dB or 40 dB) to produce output pulses. In particular embodiments, the output pulses may be sent to a third amplification stage, to a demultiplexer **410**, to a fiber-optic link **330**, or to a scanner **120** of a sensor **310**. In particular embodiments, the laser system may include a second optical filter **630**B (which may include a spectral filter, a temporal filter, or a combination of a spectral filter and a temporal filter) that receives the output pulses from the second amplifier **470** and removes an amount of ASE produced by the second amplifier **470** (e.g., removes approximately 50%, 60%, 70%, 80%, 90%, 95%, or 99% of the ASE). In particular embodiments, the laser system may include a third amplifier **470** that receives the output pulses from the second amplifier **470** and amplifies the pulses by a third amplifier gain (e.g., 10 dB, 20 dB, 30 dB or 40 dB). In particular embodiments, the amplified pulses from the third amplifier **470** may be sent to a fourth amplification stage, to a demultiplexer **410**, to a fiber-optic link **330**, or to a scanner **120** of a sensor **310**.

In particular embodiments, the optical seed pulses produced by a seed laser **400** may have an average power of greater than or equal to 1 μW, and the output pulses from a second amplifier **470** may have an average power of greater than or equal to 1 mW. In particular embodiments, the first amplifier gain and the second amplifier gain together may correspond to an overall optical power gain of greater than or equal to 40 dB (e.g., the sum of the first amplifier gain and the second amplifier gain may be greater than or equal to 40 dB). As an example, the first amplifier gain may be approximately equal to 10 dB, 20 dB, or 30 dB, and the second amplifier gain may be approximately equal to 10 dB, 20 dB, or 30 dB. As another example, the first amplifier gain may be approximately equal to 30 dB, and the second amplifier gain may be approximately equal to 20 dB, corresponding to an overall gain of approximately 50 dB.

In particular embodiments, the first fiber-optic amplifier **470** of a laser system may include a single-pass amplifier (e.g., with an erbium-doped or erbium/ytterbium-doped gain fiber **660**), and the second fiber-optic amplifier **470** may include another single-pass amplifier (e.g., with an erbium-doped or erbium/ytterbium-doped gain fiber **660**). In particular embodiments, the first fiber-optic amplifier **470** of a laser system may include a double-pass amplifier (e.g., with a circulator **510**, a gain fiber **660**, and one or more FBGs **520**), and the second fiber-optic amplifier **470** may include a single-pass amplifier (e.g., with an erbium-doped or erbium/ytterbium-doped gain fiber **660**). Additionally, the laser system may also include a third fiber-optic amplifier **470**, where the third amplifier **470** is a booster amplifier (e.g., with a double-clad gain fiber **660** that includes erbium dopants or erbium and ytterbium dopants). In particular embodiments, the first fiber-optic amplifier **470** may include a single-pass or double-pass amplifier, and the second fiber-optic amplifier **470** may include a booster amplifier that sends a free-space output beam **125** to a scanner **120** of a sensor **310** (e.g., the first amplifier **470** may be located in laser **300** and the second amplifier **470** may be located in sensor **310**). The lidar system **100** in FIG. **21** may be referred to as having a laser system that includes seed laser **400**, amplifier **1**, amplifier **2**, and amplifier **3**. Amplifiers **1**, **2**, and **3** may correspond to the first, second, and third amplifiers, respectively, as described above. Additionally, filters **630**A and **630**B in FIG. **21** may correspond to the first and second optical filters as described above.

In particular embodiments, the output pulses produced by a laser system with two or three stages of amplification may

have output-pulse characteristics that include one or more of the following: a pulse repetition frequency of less than or equal to 100 MHz (e.g., approximately 500 kHz, 640 kHz, 750 kHz, 1 MHz, 2 MHz, 4 MHz, 5 MHz, 10 MHz, 20 MHz, 50 MHz, or 100 MHz); a pulse duration of less than or equal to 20 nanoseconds (e.g., approximately 200 ps, 400 ps, 500 ps, 800 ps, 1 ns, 2 ns, 4 ns, 8 ns, 10 ns, 15 ns, or 20 ns); a duty cycle of less than or equal to 1% (e.g., approximately 0.01%, 0.02%, 0.05%, 0.1%, 0.2%, 0.5%, or 1%); an operating wavelength of between 1400 nm and 2050 nm; a pulse energy of greater than or equal to 10 nanojoules (e.g., approximately 10 nJ, 50 nJ, 100 nJ, 500 nJ, 1 μJ, 2 μJ, 5 μJ, or 10 μJ); a peak pulse power of greater than or equal to 1 watt (e.g., approximately 1 W, 10 W, 50 W, 100 W, 200 W, 500 W, 1 kW, 2 kW, or 10 kW); or an average power of less than or equal to 50 watts (e.g., approximately 50 W, 20 W, 10 W, 5 W, 2 W, 1 W, 0.5 W, or 0.1 W). As an example, a laser system may produce an output beam **125** with a pulse repetition frequency of between approximately 500 kHz and approximately 750 kHz, and the pulses may have a pulse duration between approximately 500 ps and approximately 5 ns. As another example, a laser system may produce pulses with a pulse repetition frequency of approximately 750 kHz and a pulse duration of approximately 1 ns, corresponding to a duty cycle of approximately 0.075%. As another example, a laser system may produce pulses with a pulse repetition frequency of approximately 1 MHz and a pulse duration of approximately 5 ns, corresponding to a duty cycle of approximately 0.5%. As another example, a laser system may produce pulses with a pulse duration of approximately 10 ns and a pulse energy of approximately 100 nJ, which corresponds to pulses with a peak power of approximately 10 W. As another example, a laser system may produce pulses with a pulse duration of approximately 700 ps and a pulse energy of approximately 1 μJ, which corresponds to pulses with a peak power of approximately 1.4 kW. As another example, a laser system may produce pulses with a pulse energy of approximately 2 μJ and a pulse repetition frequency of approximately 1 MHz, corresponding to an average power of approximately 2 W. As another example, a laser system may produce an output beam **125** with an average power of less than or equal to 50 W, where the output beam **125** includes ASE that makes up less than or equal to 1%, 5%, 10%, or 25% of the average power, and the optical pulses in the output beam **125** make up greater than or equal to 99%, 95%, 90%, or 75% of the average power, respectively.

In particular embodiments, an optical amplifier **470** may include any suitable number or type of optical components having any suitable arrangement. In particular embodiments, an amplifier **470** may include some, none, or all of the components illustrated in FIG. **16**, **19**, **20**, or **21**. In particular embodiments, an amplifier **470** may include 0, 1, 2, or any other suitable number of couplers and associated PDs. As an example, an amplifier **470** may include only one coupler with an associated PD (e.g., an input coupler **600**A and PD **610**A or an output coupler **600**B and PD **610**B), or an amplifier **470** may include both an input coupler **600**A and an output coupler **600**B (along with associated PDs **610**A and **610**B), as illustrated in FIG. **16**. As another example, an amplifier **470** may include a coupler and PD configured to tap off and monitor light from a pump laser **640**. As another example, an amplifier **470** may include neither an input coupler **600**A nor an output coupler **600**B. In particular embodiments, an amplifier **470** may include **0**, **1**, **2**, or any other suitable number of optical isolators. As an example, an amplifier **470** may include an input isolator **620**A or an output isolator **620**B, or an amplifier **470** may include both an input isolator **620**A and an output isolator **620**B, as illustrated in FIG. **16**. An amplifier **470** may not have an input isolator **620**A if it receives input optical pulses produced by a laser diode **440** that includes an optical isolator in its package. In particular embodiments, an amplifier **470** may include **0**, **1 2**, or any other suitable number of optical filters **630**. As an example, an amplifier **470** may include only one optical filter **630** (e.g., a filter located at an input or output of amplifier **470**), or an amplifier **470** may include optical filters **630** located at both the input and output of amplifier **470**.

In particular embodiments, an amplifier **470** may include any suitable optical components arranged in any suitable order. As an example, an amplifier **470** may include a filter **630** followed by an isolator (**620**A, **620**B), or vice versa. In particular embodiments, an amplifier input may include a filter **630**, coupler **600**A, isolator **620**A, or any other suitable component arranged in any suitable order. As an example, an amplifier input may include a coupler **600**A followed by an isolator **620**A, or an amplifier input may include an isolator **620**A followed by a coupler **600**A. Additionally, an amplifier input may include a filter **630** located before or after a coupler **600**A or isolator **620**A. The amplifier **470** in FIG. **16** has an input that includes coupler **600**A followed by isolator **620**A. In particular embodiments, an amplifier output may include an isolator **620**B, coupler **600**B, PD **610**B, filter **630**, or any other suitable component arranged in any suitable order. For example, an amplifier output may include an isolator **620**B followed by a filter **630**, or vice versa. In FIG. **16**, the amplifier output includes isolator **620**B followed by coupler **600**B, which is followed by filter **630**.

In particular embodiments, two or more optical components may be combined together into a single fiber-optic package. As an example, rather than having a discrete or separate coupler **600**A and isolator **620**A, the two components may be combined together into a single package that includes a coupler **600**A and an isolator **620**A. The package may have three fiber-optic ports: one input port, one output port, and one port for split-off light to be sent to a PD **610**A. As another example, a coupler **600**A, isolator **620**A, and PD **610**A may be combined together into a single package. As another example, isolator **620**A and pump WDM **650**A may be packaged together in a single package. As another example, pump WDM **650**B and tap coupler **600**B may be combined together into a single package. As another example, isolator **620**A, pump WDM **650**A, and tap coupler **600**A may be combined together into a single package. As another example, isolator **620** and collimator **340** may be combined together into a single package.

In particular embodiments, all or most of the optical components of an amplifier **470** may be packaged together within a single housing, where a housing may refer to a box, case, or enclosure that holds or contains the amplifier components. As an example, the components illustrated in FIG. **16** or FIG. **19** may be packaged together in a single housing, and the housing may have an input fiber and an output fiber. The housing may also include one or more electrical connections for conveying electrical power or electrical signals to or from the amplifier **470**. As another example, the components illustrated in FIG. **20** may be packaged together in a single housing, and the housing may have an input fiber and may produce a free-space output beam **125**. In particular embodiments, the optical components for two or more amplifiers **470** may be packaged together within a single housing. As an example, a housing may contain the optical components for a double-pass

amplifier (e.g., amplifier **470** of FIG. **16**) and the optical components for a single-pass amplifier (e.g., amplifier **470** of FIG. **19**). The two amplifiers may be coupled together forming a two-stage optical amplifier. In particular embodiments, the optical components for a laser **300** may be packaged together within a single housing. As an example, the seed laser **400** and amplifier **1** illustrated in FIG. **21** may be packaged together into a single housing. As another example, the seed laser **400**, amplifier **1**, and input portion of amplifier **2** illustrated in FIG. **21** may be packaged together into a single housing. In particular embodiments, a seed laser **400** and one or more amplifier stages **470** may be packaged together into a single housing. As an example, a seed laser **400**, a first-stage amplifier (e.g., amplifier **470** of FIG. **16**), and a second-stage amplifier (e.g., amplifier **470** of FIG. **19**) may be packaged together within a single housing. Additionally, the two amplifiers **470** may include an optical filter **630** that is disposed between the amplifiers.

In particular embodiments, a conventional laser system with one or more fiber-optic amplifiers may exhibit optical nonlinearities associated with the propagation of relatively short-duration or relatively high peak-power optical pulses in optical fiber. As an example, optical nonlinearities such as self-phase modulation (SPM), Raman effects (e.g., Raman scattering), or four-wave mixing (FWM) may cause a reduction in gain of an amplifier **470**, temporal or spectral distortion of optical pulses, or the generation of unwanted light (e.g., light at different wavelengths from the optical pulses). In particular embodiments, a lidar system **100** as described or illustrated herein may provide a reduction or mitigation of effects associated with optical nonlinearities. As an example, a laser system with a fiber-optic link **330** that includes a gain fiber **660** to amplify pulses on the way to a sensor head **310** may reduce the need for additional optical fiber that may contribute to unwanted nonlinear-optical effects in the fiber. As another example, use of optical fiber with larger core diameters (e.g., LMA fiber) may reduce the optical intensity in the optical fiber, which may lead to a reduction in nonlinear-optical effects. As another example, a lidar system **100** with a sensor head **310** that includes a booster amplifier **470** may exhibit reduced nonlinear-optical effects since the final amplification stage is located in the sensor head **310** and the optical pulses may not need to propagate through additional optical fiber after being amplified by the booster amplifier **470**.

In particular embodiments, a laser system as described or illustrated herein may allow the production of optical pulses having a substantially lower duty cycle, lower pulse repetition frequency, longer pulse period, or higher pulse energy than a conventional laser system. As an example, a laser system as described or illustrated herein may include one or more optical isolators **620** or optical filters **630**, which may impede or prevent an optical amplifier **470** of the laser system from emitting unwanted spurious light (e.g., spurious light may be produced through Q-switching or self-lasing). An optical isolator **620** may prevent the emission of spurious light by blocking ASE or reflected light from propagating backwards through an amplifier **470**, and an optical filter **630** may prevent the emission of spurious light by removing unwanted optical noise from a laser system. The emission of spurious light may be inhibited during the time between successive optical pulses propagating through and being amplified by an amplifier **470**. By preventing the production of spurious light between pulses, a laser system as described or illustrated herein may be able to operate with a lower duty cycle or lower pulse repetition frequency than a conventional laser system.

FIG. **22** illustrates an example lidar system **100** with a laser **300** that includes a seed laser **400** and an amplifier **470**. In particular embodiments, laser **300** may include a seed laser **400** and one or more amplifiers **470** that amplify optical pulses produced by the seed laser **400**. As an example, laser **300** may include a seed laser **400** that produces optical pulses which are amplified by one amplifier **470** located in laser **300**. The amplified pulses may also be amplified by one or more additional amplifiers **470** located in laser **300**, optical link **330**, or sensor head **310**. As an example, amplifier **470** in laser **300** may be a single-pass amplifier or a double-pass amplifier, and the lidar system **100** may include one or more additional single-pass or double-pass amplifiers or a booster amplifier with a double-clad gain fiber **660**.

FIG. **23** illustrates an example lidar system **100** with an optical link **330** that includes an amplifier **470**. In particular embodiments, an amplifier **470** may be referred to as being located or included in an optical link **330** if a gain fiber **660** of the amplifier is located in the optical link **330**. As an example, optical link **330** may include the gain fiber **660** of an amplifier **470**, and laser **300** or sensor **310** may include one or more other components of the amplifier **470** (e.g., coupler **600**A or **600**B, PD **610**A or **610**B, isolator **620**, filter **630**, pump laser **640**, or pump WDM **650**). In particular embodiments, seed laser **400** may be located in laser **300** and may produce optical pulses which are amplified by an amplifier **470** located in optical link **330**. As an example, the seed-laser pulses may be split by a demultiplexer **410** and coupled to multiple optical links **330** of a lidar system **100**, and each optical link **330** may include an amplifier **470**. The seed-laser pulses may also be amplified by one or more additional amplifiers located in laser **300** or sensor **310**. As an example, laser **300** may include an amplifier **470**, and the amplifier **470** in optical link **330** may act as a booster amplifier. As another example, the amplifier in optical link **330** may act as a preamplifier or a mid-stage amplifier, and the sensor head **310** may include a booster amplifier **470** that produces a free-space output beam **125**.

FIG. **24** illustrates an example lidar system **100** with a sensor head **310** that includes an amplifier **470**. In particular embodiments, a sensor head **310** of a lidar system **100** may include an optical amplifier **470** that receives optical pulses from a corresponding optical link **330** and amplifies the received pulses. In particular embodiments, seed laser **400** may be located in laser **300** and may produce optical pulses which are amplified by an amplifier **470** located in sensor head **310**. The sensor-head amplifier **470** in FIG. **24** may act as a booster amplifier that produces a free-space output beam **125**. Additionally, prior to reaching the sensor-head booster amplifier **470**, the seed-laser pulses may be amplified by one or more additional preamplifiers or mid-stage amplifiers located in laser **300**, optical link **330**, or sensor head **310**.

In particular embodiments, a gain fiber **660** of an amplifier **470** may be located in a sensor head **310**, and the pump laser **640** of the amplifier **470** may be located in laser **300**. As an example, light from a pump laser **640** located in laser **300** may be sent to the sensor head **310** via an optical fiber that is separate from the optical link **330**. As another example, light from a pump laser **640** may be combined with optical pulses produced in laser **300**, and the combined pump light and pulses may be sent to a sensor head **310** via the same optical link **330**. For example, the optical link **330** may include a double-clad fiber configured to convey both the pump light and the optical pulses produced in laser **300** to the sensor head **310**. The double-clad fiber, which may

include a core, inner cladding, and outer cladding, may not include rare-earth dopants and may not perform optical amplification. The optical pulses produced in laser **300** may propagate substantially in the core of the double-clad fiber, and the pump light may propagate substantially in the inner cladding. The gain fiber in the sensor head **310** may be a double-clad gain fiber **660** that is pumped by the pump light and amplifies the optical pulses from the laser **300**.

In particular embodiments, a lidar system **100** may include a laser system with a combination of two or more of the configurations illustrated in FIGS. **22-24**. As an example, a laser system may include two optical amplifiers **470** having any suitable configuration, such as for example: a first amplifier **470** located in laser **300** and a second amplifier **470** located in optical link **330** or sensor head **310**; a first amplifier **470** located in optical link **330** and a second amplifier located **470** in sensor head **310**; two amplifiers **470** located in laser **300**; or two amplifiers **470** located in sensor head **310**. As another example, a laser system may include three optical amplifiers **470** having any suitable configuration, such as for example: a first amplifier **470** located in laser **300**, a second amplifier **470** located in optical link **330**, and a third amplifier **470** located in sensor head **310**; two amplifiers **470** located in laser **300** and a third amplifier **470** located in optical link **330** or sensor head **310**; one amplifier **470** located in laser **300** and two amplifiers **470** located in sensor head **310**; three amplifiers **470** located in laser **300**; or three amplifiers **470** located in sensor head **310**. In particular embodiments, the amplifiers **470** may have one or more optical filters **630** disposed between two amplifiers **470** or located at an amplifier input or output.

In particular embodiments, a laser system may be part of a lidar system **100** that includes a laser **300**, an optical link **330**, and a sensor head **310**. The laser system may include a seed laser **400**, a first fiber-optic amplifier **470**, and a second fiber-optic amplifier **470**. The seed laser **400** may produce optical pulses which are amplified by the first and second amplifiers **470**. The seed laser **400** may be located in the laser **300**, and the optical link **330** may couple the laser **300** to the sensor head **310**. The first amplifier **470** may be located in the laser **300**, the optical link **330**, or the sensor head **310**. The second amplifier **470** may be located in the laser **300**, the optical link **330**, or the sensor head **310**. As an example, the first amplifier **470** and the second amplifier **470** may both be located in the laser **300**. As another example, the first amplifier **470** may be located in the laser **300**, and the second amplifier **470** may include a gain fiber **660** distributed along a length of the optical link **330**. As another example, the first amplifier **470** may be located in laser **300**, and the second amplifier **470** may be a booster amplifier located in the sensor head **310**. As another example, the first amplifier **470** may be located in the optical link **330**, and the second amplifier **470** may be located in the sensor head **310** (e.g., the second amplifier **470** may be a booster amplifier that produces a free-space output beam **125**). As another example, the first and second amplifiers **470** may be located in the laser **300**, and the laser system may also include a third fiber-optic amplifier **470** that is also located in the laser **300**. As another example, the first and second amplifiers **470** may be located in the laser **300**, and the laser system may also include a third fiber-optic amplifier **470** that includes a gain fiber **660** distributed along a length of the optical link **330**. As another example, the first and second amplifiers **470** may be located in the laser **300**, and the laser system may also include a third amplifier **470** located in the sensor head (e.g., the third amplifier **470** may be a fiber-optic amplifier or a free-space amplifier). As another example, the first amplifier **470** may be located in the laser **300**, the second amplifier **470** may include a gain fiber **660** distributed along a length of the optical link **330**, and the laser system may also include a third amplifier **470** located in the sensor head.

FIG. **25** illustrates an example lidar system **100** where the sensor head **310** includes an amplifier **470** coupled to an output collimator **340**. In particular embodiments, a lidar system **100** may include a sensor head **310** with a fiber-optic amplifier **470**. The fiber-optic amplifier **470** may be a booster amplifier with a double-clad gain fiber **660** that amplifies pulses from a previous optical amplifier **470**. The previous optical amplifier **470** may be located in the sensor head **310**, in optical link **330**, or in laser **300**. In the example of FIG. **25**, the sensor-head amplifier **470** may be a booster amplifier with a fiber-optic output that is terminated at output collimator **340**. The output collimator **340** may produce a free-space output beam **125** that is directed through mirror **115** and to scanner **120**.

FIG. **26** illustrates an example lidar system **100** where the sensor head **310** includes a free-space amplifier **470**. In particular embodiments, a free-space amplifier **470** may refer to an optical amplifier that amplifies a free-space optical beam (e.g., the beam that is amplified is not propagating through an optical fiber). In FIG. **26**, the free-space amplifier **470** receives optical pulses in a free-space optical beam from collimator **340**, and the free-space amplifier **470** amplifies the optical pulses and sends the amplified output pulses to mirror **115** and scanner **120**. The free-space amplifier **470** may act as a booster amplifier that amplifies a free-space input beam and produces an amplified free-space output beam **125**. In particular embodiments, a free-space amplifier **470** may include a pump laser **700** and a gain crystal **710**. As an example, the pump laser **700** may produce a free-space pump beam that is directed or coupled into the gain crystal **710**. The pump laser **700** may have any suitable operating wavelength, such as for example, approximately 908 nm, 915 nm, 940 nm, 960 nm, 976 nm, 980 nm, 1050 nm, 1064 nm, 1450 nm, or 1480 nm. The gain crystal **710** may include any suitable material configured to absorb light from the pump laser **700** and provide gain to a free-space optical beam that passes through the gain crystal **710**. As an example, the gain crystal **710** may include neodymium-doped yttrium aluminum garnet (Nd:YAG), neodymium-doped yttrium aluminum borate (Nd:YAB), erbium-doped glass, or glass or YAB doped with erbium (e.g., Er:YAB) or doped with erbium and ytterbium (e.g., Er:Yb:YAB).

FIG. **27** illustrates an example laser **300** where the seed laser **400** is combined with a supplemental light source **720**. In particular embodiments, a laser system may include one or more seed lasers **400** that produce optical pulses and one or optical amplifiers **470** that amplify the seed-laser pulses. The laser system may also include a supplemental light source **720** that is combined with the one or more seed lasers **400** before proceeding to an amplifier **470**. In particular embodiments, the supplemental light source **720** may include a laser diode or a light-emitting diode (LED). Light from the supplemental light source **720** may be combined with light from the seed laser **400** by a combiner **730**, which may include a wavelength combiner or an optical switch. As an example, the wavelength of the supplemental light source **720** may be different from the seed-laser wavelength, and the combiner **730** may include a wavelength combiner that combines the two wavelengths together onto a single fiber-optic output which is coupled to amplifier **470**. For example, the seed-laser wavelength may be approximately 1550 nm, and the supplemental-light-source wavelength may be approximately 1530 nm. As another example, combiner **730**

may include a 2×1 optical switch configured so that light from either the seed laser **400** or the supplemental light source **720** is sent to the amplifier **470**. The optical switch may be synchronized to the seed laser **400** so that when the seed laser **400** emits a pulse, the optical switch directs the pulse to the amplifier **470**, and between seed-laser pulses, the optical switch may direct light from the supplemental light source **720** to the amplifier **470**.

In particular embodiments, light from the supplemental light source **720** may impede or prevent an optical amplifier **470** from spontaneously emitting spurious light (e.g., emitting an optical pulse through Q-switching or self-lasing). The supplemental light source **720** may suppress or prevent the optical amplifier **470** from emitting spurious optical pulses during times between when a seed-laser pulse is present (e.g., during a time after a first seed-laser pulse is amplified and prior to the receipt of a subsequent second seed-laser pulse). Additionally, light from the supplemental light source **720** may reduce the amount of ASE emitted by the amplifier **470**. Light from the supplemental light source **720** may be amplified by the amplifier **470**, which may prevent the gain in the amplifier **470** from building up to a level where spurious light may be produced or where excessive ASE is emitted.

In particular embodiments, a laser system may include a filter **630** that removes ASE light produced by the amplifier **470** or removes light from the supplemental light source **720** that was amplified by the amplifier **470**. As an example, the filter **630** may be a spectral filter that removes or attenuates light at the wavelength of the supplemental light source **720**. Additionally, the filter **630** may also remove or attenuate ASE light. As another example, the filter **630** may be an optical switch that is synchronized to the seed laser **400** or the supplemental light source **720**. When an amplified seed-laser pulse is present, the optical switch may switch to an open or transmitting state that allows the pulse to propagate to the output. During times between seed-laser pulses, the optical switch may switch to a non-transmitting state to block light from the supplemental light source **720** as well as ASE light from the amplifier **470**. In particular embodiments, the supplemental light source **720** may be configured to emit light in a CW mode or in a pulsed mode. As an example, the supplemental light source **720** may be operated in a pulsed mode in which the supplemental light source **720** is turned on in between seed-laser pulses and turned off when a seed-laser pulse is present. Additionally, the filter **630** may be an optical switch configured to block the transmission of light during times when the supplemental light source **720** is turned on, and when an amplified seed-laser pulse is present, the optical switch may change to a transmitting state to allow the pulse to propagate to the output.

FIG. **28** illustrates an example laser **300** that includes a seed laser **400**, amplifier **470**, and demultiplexer **410**. In particular embodiments, laser **300** may include a seed laser **400**, one or more optical amplifiers **470**, and one or more demultiplexers **410**. As an example, optical pulses from seed laser **400** may be amplified by two or more amplifiers **470** coupled in series before proceeding to demultiplexer **410**. In the example of FIG. **28**, light from the seed laser **400** is amplified by amplifier **470** prior to being sent to demultiplexer **410** for distribution to the N optical links (**330-1**, **330-2**, . . . , **330**-N). In particular embodiments, laser **300** may include a 1×N optical demultiplexer configured to receive amplified seed-laser pulses from amplifier **470** and distribute the amplified seed-laser pulses between N optical links (**330-1**, **330-2**, . . . , **330**-N) coupled to N respective sensor heads **310**. In particular embodiments, laser **300** may include one or more optical amplifiers located after the demultiplexer **410**. As an example, laser **300** may include N optical amplifiers (not illustrated in FIG. **28**) located after the demultiplexer **410**, where each amplifier is configured to amplify light prior to sending the light to a corresponding optical link **330**.

FIG. **29** illustrates an example laser **300** that includes multiple laser diodes (**440-1**, **440-2**, . . . , **440**-N), a multiplexer **412**, an amplifier **470**, and a demultiplexer **410**. In particular embodiments, laser **300** may include one or more laser diodes **440**, one or more multiplexers **412**, one or more optical amplifiers **470**, and one or more demultiplexers **410**. In the example of FIG. **29**, optical pulses from N laser diodes (**440-1**, **440-2**, . . . , **440**-N) are combined together into a single optical fiber by multiplexer **412**, and the combined optical pulses are amplified by amplifier **470**. After amplification, demultiplexer **410** receives the amplified laser-diode pulses from amplifier **470** and distributes the amplified pulses between the N optical links (**330-1**, **330-2**, . . . , **330**-N). In particular embodiments, there may be two or more optical amplifiers **470** located between multiplexer **412** and demultiplexer **410**. In particular embodiments, the N laser diodes (**440-1**, **440-2**, . . . , **440**-N) may produce optical pulses at N different wavelengths, and multiplexer **412** may be a wavelength combiner that combines the N wavelengths of the N respective laser diodes together into a single optical fiber coupled to amplifier **470**. After the pulses are amplified by the optical amplifier **470**, the demultiplexer **410** may separate the pulses by wavelength and send them to a corresponding optical link. As an example, pulses from laser diode **440-1** may be directed by the demultiplexer **410** to optical link **330-1**, pulses from laser diode **440-2** may be directed to optical link **330-2**, and pulses from laser diode **440**-N may be directed to optical link **330**-N. As another example, laser **300** may include 6 laser diodes operating at 6 different wavelengths between approximately 1530 nm and approximately 1560 nm. Each laser diode may be a pulsed laser diode that produces pulses with a pulse repetition frequency of approximately 700 kHz. The laser-diode pulses may be synchronized and time delayed with respect to one another, and when the pulses are interleaved together by multiplexer **412**, the combined pulses may have a pulse repetition frequency of approximately 4.2 MHz. After amplification by amplifier **470**, the 4.2-MHz stream of amplified pulses may be separated by demultiplexer **410** into 6 streams of pulses, each stream having a particular wavelength and a pulse repetition frequency of approximately 700 kHz.

FIG. **30** illustrates an example laser **300** where the laser **300** is coupled to multiple optical links (**330-1**, **330-2**, . . . , **330**-N) that each include an amplifier (**470-1**, **470-2**, . . . , **470**-N). In particular embodiments, each optical link of a lidar system **100** may include a gain fiber **660** of a fiber-optic amplifier **470**, where the gain fiber amplifies pulses while propagating from laser **300** to a corresponding sensor head **310**. In particular embodiments, laser **300** may include one or more laser diodes **440**, one or more multiplexers **412**, one or more optical amplifiers **470**, and one or more demultiplexers **410**. In the example of FIG. **30**, optical pulses from N laser diodes (**440-1**, **440-2**, . . . , **440**-N) are combined together by multiplexer **412**, and the combined optical pulses are amplified by amplifier **470**. After amplification, demultiplexer **410** distributes the amplified pulses between the N optical links (**330-1**, **330-2**, . . . , **330**-N). Each of the N optical links includes a gain fiber **660** of an

amplifier **470**, and the pulses are amplified as they propagate along each optical link **330** to a corresponding sensor head **310**.

In particular embodiments, a lidar system **100** may include one or more multiplexers **412** or one or more demultiplexers **410** configured to combine or distribute optical pulses in any suitable manner. The multiplexers **412** or demultiplexers **410** may be located at any suitable location within the lidar system **100**. As an example, a demultiplexer **410** may be located after one or more optical amplifiers **470** and may be configured to distribute amplified pulses among two or more optical links **330**. Additionally, each of the optical links **330** may also include an optical amplifier **470**. As another example, a multiplexer **412** may be located before an optical amplifier **470** and may be configured to combine light from multiple laser diodes **440**. The laser diodes **440** may be coupled directly to the multiplexer **412**, or the light from each laser diode **440** may be amplified separately prior to being combined by the multiplexer **412**.

FIG. **31** illustrates an example laser **300** with multiple laser diodes (**440-1**, **440-2**, . . . , **440**-N) coupled to multiple respective optical links (**330-1**, **330-2**, . . . , **330**-N) that each include an amplifier (**470-1**, **470-2**, . . . , **470**-N). In particular embodiments, laser **300** may include multiple laser diodes (**440-1**, **440-2**, . . . , **440**-N), where each laser diode is separately coupled to a corresponding optical link. In the example of FIG. **31**, the N laser diodes (**440-1**, **440-2**, . . . , **440**-N) are individually coupled to N respective optical links (**330-1**, **330-2**, . . . , **330**-N), and each optical link includes an optical amplifier. In particular embodiments, laser **300** may also include N optical amplifiers **470** (not illustrated in FIG. **31**), where each amplifier is configured to amplify the pulses produced by a particular laser diode before the pulses are coupled to a corresponding optical link.

FIG. **32** illustrates an example lidar system **100** with an example overlap mirror **115**. In particular embodiments, a lidar system **100** may include a light source **110** configured to emit pulses of light and a scanner **120** configured to scan at least a portion of the emitted pulses of light across a field of regard. As an example, the optical pulses produced by light source **110** may pass through aperture **752** of overlap mirror **115** and then may be coupled to scanner **120**. As another example, optical pulses produced by light source **110** may pass through a demultiplexer **410** (not illustrated in FIG. **32**) which sends a portion of the pulses to scanner **120**. The portion of the pulses sent to scanner **120** may include a fraction of the pulses emitted by light source **110** (e.g., 1 out of every 6 pulses emitted by light source **110**) or may include a fraction of each pulse emitted by light source **110** (e.g., each pulse may be split into 6 pulses, and one of the 6 split pulses may be sent to the scanner **120**. In particular embodiments, a lidar system **100** may include a receiver **140** configured to detect at least a portion of the scanned pulses of light scattered by a target **130** located a distance from the lidar system **100**. As an example, a pulse of light that is directed downrange from lidar system **100** by scanner **120** (e.g., as part of output beam **125**) may scatter off a target **130**, and a portion of the scattered light may propagate back to the lidar system **100** (e.g., as part of input beam **135**) and be detected by receiver **140**.

In particular embodiments, light source **110**, scanner **120**, and receiver **140** may be packaged together within a single housing. As an example, a lidar-system enclosure may contain a light source **110**, overlap mirror **115**, scanner **120**, and receiver **140** of a lidar system **100**. Additionally, the lidar-system enclosure may include a controller **150**, or a controller **150** may be located remotely from the enclosure. The lidar-system enclosure may also include one or more electrical connections for conveying electrical power or electrical signals to or from the enclosure. In particular embodiments, light source **110** may be located remotely from scanner **120** and receiver **140**. As an example, scanner **120** and receiver **140** may be part of a sensor head **310** located remotely from light source **110**. The sensor head **310** may be coupled to the light source **110** by an optical link **330** which conveys at least a portion of the pulses of light emitted by the light source **110** to the sensor head **310**. In particular embodiments, a lidar system **100** may include multiple sensor heads **310**, where each sensor head **310** includes a respective scanner **120** and receiver **140**. The light source **110** may be coupled to each sensor head **310** by a respective optical link **330** which conveys a respective portion of the pulses of light emitted by the light source **110** from the light source **110** to each sensor head **310**.

In particular embodiments, light source **110** may include a seed laser **400** configured to produce optical seed pulses and one or more optical amplifiers **470** that amplify the optical seed pulses to produce the pulses of light emitted by the light source **110**. The seed laser **400** may include one or more laser diodes **440**, such as for example, one or more Fabry-Perot laser diodes, DFB lasers, or DBR lasers. In particular embodiments, light source **110** may include a laser diode **440** without any optical-amplification stages located after the laser diode **440**. As an example, light source **110** may include a pulsed laser diode (e.g., a pulsed Fabry-Perot laser diode, DFB laser, or DBR laser) that is coupled to a scanner **120** without the emitted pulses from the pulsed laser diode being amplified.

In particular embodiments, light source **110** may include an eye-safe laser. An eye-safe laser may refer to a laser with an emission wavelength, average power, peak power, peak intensity, pulse energy, beam size, beam divergence, or exposure time such that emitted light from the laser presents little or no possibility of causing damage to a person's eyes. As an example, light source **110** may be classified as a Class 1 laser product (as specified by the 60825-1 standard of the International Electrotechnical Commission (IEC)) or a Class I laser product (as specified by Title **21**, Section 1040.10 of the United States Code of Federal Regulations (CFR)) that is safe under all conditions of normal use. In particular embodiments, light source **110** may include an eye-safe laser (e.g., a Class 1 or a Class I laser) configured to operate at any suitable wavelength between approximately 1400 nm and approximately 2100 nm. As an example, light source **110** may include an eye-safe laser with an operating wavelength between approximately 1400 nm and approximately 1600 nm. As another example, light source **110** may include an eye-safe laser with an operating wavelength between approximately 1530 nm and approximately 1560 nm.

In particular embodiments, scanner **120** may include one or more mirrors, where each mirror is mechanically driven by a galvanometer scanner, a resonant scanner, a MEMS device, a voice coil motor, or any suitable combination thereof. A galvanometer scanner (which may be referred to as a galvanometer actuator) may include a galvanometer-based scanning motor with a magnet and coil. When an electrical current is supplied to the coil, a rotational force is applied to the magnet, which causes a mirror attached to the galvanometer scanner to rotate. The electrical current supplied to the coil may be controlled to dynamically change the position of the galvanometer mirror. A resonant scanner (which may be referred to as a resonant actuator) may include a spring-like mechanism driven by an actuator to

produce a periodic oscillation at a substantially fixed frequency (e.g., 1 kHz). A MEMS-based scanning device may include a mirror with a diameter between approximately 1 and 10 mm, where the mirror is rotated using electromagnetic or electrostatic actuation. A voice coil motor (which may be referred to as a voice coil actuator) may include a magnet and coil. When an electrical current is supplied to the coil, a translational force is applied to the magnet, which causes a mirror attached to the magnet to move or rotate.

In particular embodiments, a scanner **120** may include any suitable number of mirrors driven by any suitable number of mechanical actuators. As an example, a scanner **120** may include a single mirror configured to scan an output beam **125** along a single direction (e.g., a scanner **120** may be a one-dimensional scanner that scans along a horizontal or vertical direction). The mirror may be driven by one actuator (e.g., a galvanometer) or two actuators configured to drive the mirror in a push-pull configuration. As another example, a scanner **120** may include a single mirror that scans an output beam **125** along two directions (e.g., horizontal and vertical). The mirror may be driven by two actuators, where each actuator provides rotational motion along a particular direction or about a particular axis. As another example, a scanner **120** may include two mirrors, where one mirror scans an output beam **125** along a horizontal direction and the other mirror scans the output beam **125** along a vertical direction. In the example of FIG. **32**, scanner **120** includes two mirrors, mirror **750**A and mirror **750**B. Mirror **750**A may scan output beam **125** along a substantially horizontal direction, and mirror **750**B may scan the output beam **125** along a substantially vertical direction.

In particular embodiments, a scanner **120** may include two mirrors, where each mirror is driven by a corresponding galvanometer scanner. As an example, scanner **120** may include a galvanometer actuator that scans mirror **750**A along a first direction (e.g., horizontal), and scanner **120** may include another galvanometer actuator that scans mirror **750**B along a second direction (e.g., vertical). In particular embodiments, a scanner **120** may include two mirrors, where one mirror is driven by a resonant actuator and the other mirror is driven by a galvanometer actuator. As an example, a resonant actuator may scan mirror **750**A along a first direction, and a galvanometer actuator may scan mirror **750**B along a second direction. The first and second directions may be substantially orthogonal to one another. As an example, the first direction may be substantially horizontal, and the second direction may be substantially vertical, or vice versa. In particular embodiments, a scanner **120** may include one mirror driven by two actuators which are configured to scan the mirror along two substantially orthogonal directions. As an example, one mirror may be driven along a substantially horizontal direction by a resonant actuator or a galvanometer actuator, and the mirror may also be driven along a substantially vertical direction by a galvanometer actuator. As another example, a mirror may be driven along two substantially orthogonal directions by two resonant actuators.

In particular embodiments, a scanner **120** may include a mirror configured to be scanned along one direction by two actuators arranged in a push-pull configuration. Driving a mirror in a push-pull configuration may refer to a mirror that is driven in one direction by two actuators. The two actuators may be located at opposite ends or sides of the mirror, and the actuators may be driven in a cooperative manner so that when one actuator pushes on the mirror, the other actuator pulls on the mirror, and vice versa. As an example, a mirror may be driven along a horizontal or vertical direction by two voice coil actuators arranged in a push-pull configuration. In particular embodiments, a scanner **120** may include one mirror configured to be scanned along two axes, where motion along each axis is provided by two actuators arranged in a push-pull configuration. As an example, a mirror may be driven along a horizontal direction by two resonant actuators arranged in a horizontal push-pull configuration, and the mirror may be driven along a vertical direction by another two resonant actuators arranged in a vertical push-pull configuration.

In particular embodiments, a scanner **120** may include two mirrors which are driven synchronously so that the output beam **125** is directed along any suitable scan pattern **200**. As an example, a galvanometer actuator may drive mirror **750**A with a substantially linear back-and-forth motion (e.g., the galvanometer may be driven with a substantially triangle-shaped waveform) that causes output beam **125** to trace a substantially horizontal back-and-forth pattern. Additionally, another galvanometer actuator may scan mirror **750**B relatively slowly along a substantially vertical direction. For example, the two galvanometers may be synchronized so that for every 64 horizontal traces, the output beam **125** makes a single trace along a vertical direction. As another example, a resonant actuator may drive mirror **750**A along a substantially horizontal direction, and a galvanometer actuator may scan mirror **750**B relatively slowly along a substantially vertical direction.

In particular embodiments, a scanner **120** may include one mirror driven by two or more actuators, where the actuators are driven synchronously so that the output beam **125** is directed along a particular scan pattern **200**. As an example, one mirror may be driven synchronously along two substantially orthogonal directions so that the output beam **125** follows a scan pattern **200** that includes substantially straight lines. In particular embodiments, a scanner **120** may include two mirrors driven synchronously so that the synchronously driven mirrors trace out a scan pattern **200** that includes substantially straight lines. As an example, the scan pattern **200** may include a series of substantially straight lines directed substantially horizontally, vertically, or along any other suitable direction. The straight lines may be achieved by applying a dynamically adjusted deflection along a vertical direction (e.g., with a galvanometer actuator) as an output beam **125** is scanned along a substantially horizontal direction (e.g., with a galvanometer or resonant actuator). If a vertical deflection is not applied, the output beam **125** may trace out a curved path as it scans from side to side. By applying a vertical deflection as the mirror is scanned horizontally, a scan pattern **200** that includes substantially straight lines may be achieved. In particular embodiments, a vertical actuator may be used to apply both a dynamically adjusted vertical deflection as the output beam **125** is scanned horizontally as well as a discrete vertical offset between each horizontal scan (e.g., to step the output beam **125** to a subsequent row of a scan pattern **200**).

In the example of FIG. **32**, lidar system **100** produces an output beam **125** and receives light from an input beam **135**. The output beam **125**, which includes at least a portion of the pulses of light emitted by light source **110**, may be scanned across a field of regard. The input beam **135** may include at least a portion of the scanned pulses of light which are scattered by one or more targets **130** and detected by receiver **140**. In particular embodiments, output beam **125** and input beam **135** may be substantially coaxial. The input and output beams being substantially coaxial may refer to the beams being at least partially overlapped or sharing a common propagation axis so that input beam **135** and output

beam **125** travel along substantially the same optical path (albeit in opposite directions). As output beam **125** is scanned across a field of regard, the input beam **135** may follow along with the output beam **125** so that the coaxial relationship between the two beams is maintained.

In particular embodiments, a lidar system **100** may include an overlap mirror **115** configured to overlap the input beam **135** and output beam **125** so that they are substantially coaxial. In FIG. **32**, the overlap mirror **115** includes a hole, slot, or aperture **752** which the output beam **125** passes through and a reflecting surface **754** that reflects at least a portion of the input beam **135** toward the receiver **140**. The overlap mirror **115** may be oriented so that input beam **135** and output beam **125** are at least partially overlapped. In particular embodiments, input beam **135** may pass through a lens **756** which focuses the beam onto an active region of the receiver **140** (e.g., the active region may have a diameter d). In particular embodiments, overlap mirror **115** may have a reflecting surface **754** that is substantially flat or the reflecting surface **754** may be curved (e.g., mirror **115** may be an off-axis parabolic mirror configured to focus the input beam **135** onto an active region of the receiver **140**).

In particular embodiments, aperture **752** may have any suitable size or diameter Φ_1, and input beam **135** may have any suitable size or diameter Φ_2, where Φ_2 is greater than Φ_1. As an example, aperture **752** may have a diameter Φ_1 of approximately 0.2 mm, 0.5 mm, 1 mm, 2 mm, 3 mm, 5 mm, or 10 mm, and input beam **135** may have a diameter Φ_2 of approximately 2 mm, 5 mm, 10 mm, 15 mm, 20 mm, 30 mm, 40 mm, or 50 mm. In particular embodiments, reflective surface **754** of overlap mirror **115** may reflect greater than or equal to 70% of input beam **135** toward the receiver **140**. As an example, if reflective surface **754** has a reflectivity R at an operating wavelength of the light source **110**, then the fraction of input beam **135** directed toward the receiver **140** may be expressed as $R\times[1-(\Phi_1/\Phi_2)^2]$. For example, if R is 95%, Φ_1 is 2 mm, and Φ_2 is 10 mm, then approximately 91% of input beam **135** may be directed toward the receiver **140** by reflective surface **754**.

FIG. **33** illustrates an example light-source field of view (FOV_L) and receiver field of view (FOV_R) for a lidar system **100**. The light source **110** may emit pulses of light as the FOV_L and FOV_R are scanned across a field of regard of the lidar system **100**. In particular embodiments, a light-source field of view may refer to an angular cone illuminated by the light source **110** at a particular instant of time. Similarly, the receiver field of view may refer to an angular cone over which the receiver **140** may receive or detect light at a particular instant of time, and any light outside the receiver field of view may not be received or detected. As an example, as the light-source field of view is scanned across a field of regard, a portion of a pulse of light emitted by the light source **110** may be sent downrange from lidar system **100**, and the pulse of light may be sent in the direction that the FOV_L is pointing at the time the pulse is emitted. The pulse of light may scatter off a target **130**, and the receiver **140** may receive and detect a portion of the scattered light that is directed along or contained within the FOV_R.

In particular embodiments, scanner **120** may be configured to scan both a light-source field of view and a receiver field of view across a field of regard of the lidar system **100**. Multiple pulses of light may be emitted and detected as the scanner **120** scans the FOV_L and FOV_R across the field of regard of the lidar system **100** while tracing out a scan pattern **200**. In particular embodiments, the light-source field of view and the receiver field of view may be scanned synchronously with respect to one another, so that as the FOV_L is scanned across a scan pattern **200**, the FOV_R follows substantially the same path at the same scanning speed. Additionally, the FOV_L and FOV_R may maintain the same relative position to one another as they are scanned across the field of regard. As an example, the FOV_L may be substantially overlapped with or centered inside the FOV_R (as illustrated in FIG. **33**), and this relative positioning between FOV_L and FOV_R may be maintained throughout a scan. As another example, the FOV_R may lag behind the FOV_L by a particular, fixed amount throughout a scan (e.g., the FOV_R may be offset from the FOV_L in a direction opposite the scan direction).

In particular embodiments, the FOV_L may have an angular size or extent Θ_L that is substantially the same as or that corresponds to the divergence of the output beam **125**, and the FOV_R may have an angular size or extent Θ_R that corresponds to an angle over which the receiver **140** may receive and detect light. In particular embodiments, the receiver field of view may be any suitable size relative to the light-source field of view. As an example, the receiver field of view may be smaller than, substantially the same size as, or larger than the angular extent of the light-source field of view. In particular embodiments, the light-source field of view may have an angular extent of less than or equal to 50 milliradians, and the receiver field of view may have an angular extent of less than or equal to 50 milliradians. The FOV_L may have any suitable angular extent Θ_L, such as for example, approximately 0.1 mrad, 0.2 mrad, 0.5 mrad, 1 mrad, 1.5 mrad, 2 mrad, 3 mrad, 5 mrad, 10 mrad, 20 mrad, 40 mrad, or 50 mrad. Similarly, the FOV_R may have any suitable angular extent Θ_R, such as for example, approximately 0.1 mrad, 0.2 mrad, 0.5 mrad, 1 mrad, 1.5 mrad, 2 mrad, 3 mrad, 5 mrad, 10 mrad, 20 mrad, 40 mrad, or 50 mrad. In particular embodiments, the light-source field of view and the receiver field of view may have approximately equal angular extents. As an example, Θ_L and Θ_R may both be approximately equal to 1 mrad, 2 mrad, or 3 mrad. In particular embodiments, the receiver field of view may be larger than the light-source field of view, or the light-source field of view may be larger than the receiver field of view. As an example, Θ_L may be approximately equal to 1.5 mrad, and Θ_R may be approximately equal to 3 mrad.

In particular embodiments, a pixel **210** may represent or may correspond to a light-source field of view. As the output beam **125** propagates from the light source **110**, the diameter of the output beam **125** (as well as the size of the corresponding pixel **210**) may increase according to the beam divergence Θ_L. As an example, if the output beam **125** has a Θ_L of 2 mrad, then at a distance of 100 m from the lidar system **100**, the output beam **125** may have a size or diameter of approximately 20 cm, and a corresponding pixel **210** may also have a corresponding size or diameter of approximately 20 cm. At a distance of 200 m from the lidar system **100**, the output beam **125** and the corresponding pixel **210** may each have a diameter of approximately 40 cm.

FIG. **34** illustrates an example light-source field of view and receiver field of view with a corresponding scan direction. In particular embodiments, scanner **120** may scan the FOV_L and FOV_R along any suitable scan direction or combination of scan directions, such as for example, left to right, right to left, upward, downward, or any suitable combination thereof. As an example, the FOV_L and FOV_R may follow a left-to-right scan direction (as illustrated in FIG. **34**) across a field of regard, and then the FOV_L and FOV_R may travel back across the field of regard in a right-to-left scan direction. In particular embodiments, a light-source field of view and a receiver field of view may be at least partially

overlapped during scanning. As an example, the FOV_L and FOV_R may have any suitable amount of angular overlap, such as for example, approximately 1%, 2%, 5%, 10%, 25%, 50%, 75%, 90%, or 100% of angular overlap. As another example, if Θ_L and Θ_R are 2 mrad, and FOV_L and FOV_R are offset from one another by 1 mrad, then FOV_L and FOV_R may be referred to as having a 50% angular overlap. As another example, the FOV_L and FOV_R may be substantially coincident with one another and may have an angular overlap of approximately 100%. In the example of FIG. **34**, the FOV_L and FOV_R are approximately the same size and have an angular overlap of approximately 90%.

FIG. **35** illustrates an example receiver field of view that is offset from a light-source field of view. In particular embodiments, a FOV_L and FOV_R may be scanned along a particular scanning direction, and the FOV_R may be offset from the FOV_L in a direction opposite the scanning direction. In the example of FIG. **35**, the FOV_L and FOV_R are approximately the same size, and the FOV_R lags behind the FOV_L so that the FOV_L and FOV_R have an angular overlap of approximately 5%. In particular embodiments, the FOV_R may be configured to lag behind the FOV_L to produce any suitable angular overlap, such as for example, an angular overlap of less than or equal to 50%, 25%, 5%, 1%, or 0.1%. After a pulse of light is emitted by light source **110**, the pulse may scatter from a target **130**, and some of the scattered light may propagate back to the lidar system **100** along a path that corresponds to the orientation of the light-source field of view at the time the pulse was emitted. As the pulse of light propagates to and from the target **130**, the receiver field of view moves in the scan direction and increases its overlap with the previous location of the light-source field of view (e.g., the location of the light-source field of view when the pulse was emitted). For a close-range target (e.g., a target **130** located within 20% of the maximum range of the lidar system), when the receiver **140** detects scattered light from the emitted pulse, the receiver field of view may overlap less than or equal to 20% of the previous location of the light-source field of view. The receiver **140** may receive less than or equal to 20% of the scattered light that propagates back to the lidar system **100** along the path that corresponds to the orientation of the light-source field of view at the time the pulse was emitted. However, since the target **130** is located relatively close to the lidar system **100**, the receiver **140** may still receive a sufficient amount of light to produce a signal indicating that a pulse has been detected. For a midrange target (e.g., a target **130** located between 20% and 80% of the maximum range of the lidar system **100**), when the receiver **140** detects the scattered light, the receiver field of view may overlap between 20% and 80% of the previous location of the light-source field of view. For a target **130** located a distance greater than or equal to 80% of the maximum range of the lidar system **100**, when the receiver **140** detects the scattered light, the receiver field of view may overlap greater than or equal to 80% of the previous location of the light-source field of view. For a target **130** located at the maximum range from the lidar system **100**, when the receiver **140** detects the scattered light, the receiver field of view may be substantially overlapped with the previous location of the light-source field of view, and the receiver **140** may receive substantially all of the scattered light that propagates back to the lidar system **100**.

FIG. **36** illustrates an example forward-scan direction and reverse-scan direction for a light-source field of view and a receiver field of view. In particular embodiments, a lidar system **100** may be configured so that the FOV_R is larger than the FOV_L, and the receiver and light-source FOVs may be substantially coincident, overlapped, or centered with respect to one another. As an example, the FOV_R may have a diameter or angular extent Θ_R, that is approximately 1.5×, 2×, 3×, 4×, 5×, or 10× larger than the diameter or angular extent Θ_L of the FOV_L. In the example of FIG. **36**, the diameter of the receiver field of view is approximately 2 times larger than the diameter of the light-source field of view, and the two FOVs are overlapped and centered with respect to one another. The receiver field of view being larger than the light-source field of view may allow the receiver **140** to receive scattered light from emitted pulses in both scan directions (forward scan or reverse scan). In the forward-scan direction illustrated in FIG. **36**, scattered light may be received primarily by the left side of the FOV_R, and in the reverse-scan direction, scattered light may be received primarily by the right side of the FOV_R. For example, as a pulse of light propagates to and from a target **130** during a forward scan, the FOV_R scans to the right, and scattered light that returns to the lidar system **100** may be received primarily by the left portion of the FOV_R.

In particular embodiments, a lidar system **100** may perform a series of forward and reverse scans. As an example, a forward scan may include the FOV_L and the FOV_R being scanned horizontally from left to right, and a reverse scan may include the two fields of view being scanned from right to left. As another example, a forward scan may include the FOV_L and the FOV_R being scanned along any suitable direction (e.g., along a 45-degree angle), and a reverse scan may include the two fields of view being scanned along a substantially opposite direction. In particular embodiments, the forward and reverse scans may trace paths that are adjacent to or displaced with respect to one another. As an example, a reverse scan may follow a line in the field of regard that is displaced above, below, to the left of, or to the right of a previous forward scan. As another example, a reverse scan may scan a row in the field of regard that is displaced below a previous forward scan, and the next forward scan may be displaced below the reverse scan. The forward and reverse scans may continue in an alternating manner with each scan being displaced with respect to the previous scan until a complete field of regard has been covered. Scans may be displaced with respect to one another by any suitable angular amount, such as for example, by approximately 0.05°, 0.1°, 0.2°, 0.5°, 1°, or 2°.

FIG. **37** illustrates an example InGaAs avalanche photodiode (APD) **760**. In particular embodiments, a receiver **140** may include one or more APDs **760** configured to receive and detect light from an input beam **135**. In particular embodiments, an APD **760** may be configured to detect a portion of pulses of light which are scattered by a target **130** located downrange from lidar system **100**. As an example, an APD **760** may receive a portion of a pulse of light scattered by a target **130**, and the APD **760** may generate an electrical-current signal corresponding to the received pulse of light.

In particular embodiments, an APD **760** may include doped or undoped layers of any suitable semiconductor material, such as for example, silicon, germanium, InGaAs, InGaAsP, or indium phosphide (InP). Additionally, an APD **760** may include an upper electrode **762** and a lower electrode **772** for coupling the ADP **760** to an electrical circuit. As an example, the APD **760** may be electrically coupled to a voltage source that supplies a reverse-bias voltage V to the APD **760**. Additionally, the APD **760** may be electrically coupled to a transimpedance amplifier which receives electrical current generated by the APD **760** and produces an output voltage signal that corresponds to the

received current. The upper electrode **762** or lower electrode **772** may include any suitable electrically conductive material, such as for example a metal (e.g., gold, copper, silver, or aluminum), a transparent conductive oxide (e.g., indium tin oxide), a carbon-nanotube material, or polysilicon. In particular embodiments, the upper electrode **762** may be partially transparent or may have an opening to allow input light **135** to pass through to the active region of the APD **760**. In FIG. **37**, the upper electrode **762** may have a ring shape that at least partially surrounds the active region of the APD, where the active region refers to an area over which the APD **760** may receive and detect input light **135**. The active region may have any suitable size or diameter d, such as for example, a diameter of approximately 25 μm, 50 μm, 80 μm, 100 μm, 200 μm, 500 μm, 1 mm, 2 mm, or 5 mm.

In particular embodiments, an APD **760** may include any suitable combination of any suitable semiconductor layers having any suitable doping (e.g., n-doped, p-doped, or intrinsic undoped material). In the example of FIG. **37**, the InGaAs APD **760** includes a p-doped InP layer **764**, an InP avalanche layer **766**, an absorption layer **768** with n-doped InGaAs or InGaAsP, and an n-doped InP substrate layer **770**. In particular embodiments, an APD **760** may include separate absorption and avalanche layers, or a single layer may act as both an absorption and avalanche region. An InGaAs APD **760** may operate electrically as a PN diode or a PIN diode, and during operation, the APD **760** may be reverse biased with a positive voltage V applied to the lower electrode **772** with respect to the upper electrode **762**. The applied reverse-bias voltage V may have any suitable value, such as for example approximately 5 V, 10 V, 20 V, 30 V, 50 V, 75 V, 100 V, or 200 V.

In FIG. **37**, photons of input light **135** may be absorbed primarily in the absorption layer **768**, resulting in the generation of electron-hole pairs (which may be referred to as photo-generated carriers). As an example, the absorption layer **768** may be configured to absorb photons corresponding to the operating wavelength of the lidar system **100** (e.g., any suitable wavelength between approximately 1400 nm and approximately 1600 nm). In the avalanche layer **766**, an avalanche-multiplication process occurs where carriers (e.g., electrons or holes) generated in the absorption layer **768** collide with the semiconductor lattice of the absorption layer **768**, and produce additional carriers through impact ionization. This avalanche process can repeat numerous times so that one photo-generated carrier may result in the generation of multiple carriers. As an example, a single photon absorbed in the absorption layer **768** may lead to the generation of approximately 10, 50, 100, 200, 500, 1000, 10,000, or any other suitable number of carriers through an avalanche-multiplication process. The carriers generated in an APD **760** may produce an electrical current that is coupled to an electrical circuit which may perform signal amplification, sampling, filtering, signal conditioning, analog-to-digital conversion, time-to-digital conversion, pulse detection, threshold detection, rising-edge detection, or falling-edge detection.

In particular embodiments, the number of carriers generated from a single photo-generated carrier may increase as the applied reverse bias V is increased. If the applied reverse bias V is increased above a particular value referred to as the APD breakdown voltage, then a single carrier can trigger a self-sustaining avalanche process (e.g., the output of the APD **760** is saturated regardless of the input light level). In particular embodiments, an APD **760** that is operated at or above a breakdown voltage may be referred to as a single-photon avalanche diode (SPAD) and may be referred to as operating in a Geiger mode or a photon-counting mode. An APD **760** operated below a breakdown voltage may be referred to as a linear APD **760**, and the output current generated by the APD may be sent to an amplifier circuit (e.g., a transimpedance amplifier). In particular embodiments, receiver **140** may include an APD configured to operate as a SPAD and a quenching circuit configured to reduce a reverse-bias voltage applied to the SPAD when an avalanche event occurs in the SPAD. An APD **760** configured to operate as a SPAD may be coupled to an electronic quenching circuit that reduces the applied voltage V below the breakdown voltage when an avalanche-detection event occurs. Reducing the applied voltage may halt the avalanche process, and the applied reverse-bias voltage may then be re-set to await a subsequent avalanche event. Additionally, the APD **760** may be coupled to a circuit that generates an electrical output pulse or edge when an avalanche event occurs.

In particular embodiments, an APD **760** or an APD **760** and a transimpedance amplifier may have a noise-equivalent power (NEP) that is less than or equal to 100 photons, 50 photons, 30 photons, 20 photons, or 10 photons. As an example, an InGaAs APD **760** may be operated as a SPAD and may have a NEP of less than or equal to 20 photons. As another example, an InGaAs APD **760** may be coupled to a transimpedance amplifier that produces an output voltage signal with a NEP of less than or equal to 50 photons. The NEP of an APD **760** is a metric that quantifies the sensitivity of the APD **760** in terms of a minimum signal (or a minimum number of photons) that the APD **760** can detect. In particular embodiments, the NEP may correspond to an optical power (or to a number of photons) that results in a signal-to-noise ratio of 1, or the NEP may represent a threshold number of photons above which an optical signal may be detected. As an example, if an APD **760** has a NEP of 20 photons, then an input beam **135** with 20 photons may be detected with a signal-to-noise ratio of approximately 1 (e.g., the APD **760** may receive 20 photons from the input beam **135** and generate an electrical signal representing the input beam **135** that has a signal-to-noise ratio of approximately 1). Similarly, an input beam **135** with 100 photons may be detected with a signal-to-noise ratio of approximately 5. In particular embodiments, a lidar system **100** with an APD **760** (or a combination of an APD **760** and transimpedance amplifier) having a NEP of less than or equal to 100 photons, 50 photons, 30 photons, 20 photons, or 10 photons may offer improved detection sensitivity with respect to a conventional lidar system that uses a PN or PIN photodiode. As an example, an InGaAs PIN photodiode used in a conventional lidar system may have a NEP of approximately 10^4 to 10^5 photons, and the noise level in a lidar system with an InGaAs PIN photodiode may be 10^3 to 10^4 times greater than the noise level in a lidar system **100** with an InGaAs APD detector **760**.

In particular embodiments, an optical filter **630** located in front of receiver **140** may be configured to transmit light at one or more operating wavelengths of the light source **110** and attenuate light at surrounding wavelengths. As an example, an optical filter **630** may be a free-space spectral filter located in front of APD **760**. The spectral filter may transmit light at the operating wavelength of the light source **110** (e.g., between approximately 1530 nm and 1560 nm) and may attenuate light outside that wavelength range. As an example, light with wavelengths of approximately 400-1530 nm or 1560-2000 nm may be attenuated by any suitable amount, such as for example, by at least 5 dB, 10 dB, 20 dB, 30 dB, or 40 dB.

FIG. **38** illustrates an APD **760** coupled to an example pulse-detection circuit **780**. In particular embodiments, a pulse-detection circuit **780** may include circuitry that receives a signal from a detector (e.g., an electrical current from APD **760**) and performs current-to-voltage conversion, signal amplification, sampling, filtering, signal conditioning, analog-to-digital conversion, time-to-digital conversion, pulse detection, threshold detection, rising-edge detection, or falling-edge detection. The pulse-detection circuit **780** may determine whether an optical pulse has been received by an APD **760** or may determine a time associated with receipt of an optical pulse by APD **760**. In particular embodiments, a pulse-detection circuit **780** may include a transimpedance amplifier (TIA) **782**, a gain circuit **784**, a comparator **786**, or a time-to-digital converter (TDC) **788**. In particular embodiments, a pulse-detection circuit **780** may be included in a receiver **140** or a controller **150**, or parts of a pulse-detection circuit **780** may be included in a receiver **140** and controller **150**. As an example, a TIA **782** and a voltage-gain circuit **784** may be part of a receiver **140**, and a comparator **786** and a TDC **788** may be part of a controller **150** that is coupled to the receiver **140**.

In particular embodiments, a pulse-detection circuit **780** may include a TIA **782** configured to receive an electrical-current signal from an APD **760** and produce a voltage signal that corresponds to the received electrical-current signal. As an example, in response to a received optical pulse, an APD **760** may produce a current pulse corresponding to the optical pulse. A TIA **782** may receive the current pulse from the APD **760** and produce a voltage pulse that corresponds to the received current pulse. In particular embodiments, a TIA **782** may also act as an electronic filter. As an example, a TIA **782** may be configured as a low-pass filter that removes or attenuates high-frequency electrical noise by attenuating signals above a particular frequency (e.g., above 1 MHz, 10 MHz, 20 MHz, 50 MHz, 100 MHz, 200 MHz, or any other suitable frequency). In particular embodiments, a pulse-detection circuit **780** may include a gain circuit **784** configured to amplify a voltage signal. As an example, a gain circuit **784** may include one or more voltage-amplification stages that amplify a voltage signal received from a TIA **782**. For example, the gain circuit **784** may receive a voltage pulse from a TIA **782**, and the gain circuit **784** may amplify the voltage pulse by any suitable amount, such as for example, by a gain of approximately 3 dB, 10 dB, 20 dB, 30 dB, 40 dB, or 50 dB. Additionally, the gain circuit **784** may also act as an electronic filter configured to remove or attenuate electrical noise.

In particular embodiments, a pulse-detection circuit **780** may include a comparator **786** configured to receive a voltage signal from TIA **782** or gain circuit **784** and produce an electrical-edge signal (e.g., a rising edge or a falling edge) when the received voltage signal rises above or falls below a particular threshold voltage V_T. As an example, when a received voltage rises above V_T, a comparator **786** may produce a rising-edge digital-voltage signal (e.g., a signal that steps from approximately 0 V to approximately 2.5 V, 3.3 V, 5 V, or any other suitable digital-high level). As another example, when a received voltage falls below V_T, a comparator **786** may produce a falling-edge digital-voltage signal (e.g., a signal that steps down from approximately 2.5 V, 3.3 V, 5 V, or any other suitable digital-high level to approximately 0 V). The voltage signal received by the comparator **786** may be received from a TIA **782** or gain circuit **784** and may correspond to an electrical-current signal generated by an APD **760**. As an example, the voltage signal received by the comparator **786** may include a voltage pulse that corresponds to an electrical-current pulse produced by the APD **760** in response to receiving an optical pulse. The voltage signal received by the comparator **786** may be an analog signal, and an electrical-edge signal produced by the comparator **786** may be a digital signal.

In particular embodiments, a pulse-detection circuit **780** may include a time-to-digital converter (TDC) **788** configured to receive an electrical-edge signal from a comparator **786** and determine an interval of time between emission of a pulse of light by the light source **110** and receipt of the electrical-edge signal. The output of the TDC **788** may be a numerical value that corresponds to the time interval determined by the TDC **788**. In particular embodiments, a TDC **788** may have an internal counter or clock with any suitable period, such as for example, 5 ps, 10 ps, 15 ps, 20 ps, 30 ps, 50 ps, 100 ps, 0.5 ns, 1 ns, 2 ns, 5 ns, or 10 ns. As an example, the TDC **788** may have an internal counter or clock with a 20 ps period, and the TDC **788** may determine that an interval of time between emission and receipt of a pulse is equal to 25,000 time periods, which corresponds to a time interval of approximately 0.5 microseconds. The TDC **788** may send the numerical value "25000" to a processor or controller **150** of the lidar system **100**. In particular embodiments, a lidar system **100** may include a processor configured to determine a distance from the lidar system **100** to a target **130** based at least in part on an interval of time determined by a TDC **788**. As an example, the processor may be an ASIC or FPGA and may be a part of controller **150**. The processor may receive a numerical value (e.g., "25000") from the TDC **788**, and based on the received value, the processor may determine the distance from the lidar system **100** to a target **130**.

In particular embodiments, determining an interval of time between emission and receipt of a pulse of light may be based on determining (1) a time associated with the emission of the pulse by light source **110** or lidar system **100** and (2) a time when scattered light from the pulse is detected by receiver **140**. As an example, a TDC **788** may count the number of time periods or clock cycles between an electrical edge associated with emission of a pulse of light and an electrical edge associated with detection of scattered light from the pulse. Determining when scattered light from the pulse is detected by receiver **140** may be based on determining a time for a rising or falling edge (e.g., a rising or falling edge produced by comparator **786**) associated with the detected pulse. In particular embodiments, determining a time associated with emission of a pulse of light may be based on an electrical trigger signal. As an example, light source **110** may produce an electrical trigger signal for each pulse of light that is emitted, or an electrical device (e.g., function generator **420** or controller **150**) may provide a trigger signal to the light source **110** to initiate the emission of each pulse of light. A trigger signal associated with emission of a pulse may be provided to TDC **788**, and a rising edge or falling edge of the trigger signal may correspond to a time when a pulse is emitted. In particular embodiments, a time associated with emission of a pulse may be determined based on an optical trigger signal. As an example, a time associated with the emission of a pulse of light may be determined based at least in part on detection of a portion of light from the emitted pulse of light. The portion of light may be detected by a separate detector (e.g., a PIN photodiode or an APD **760**) or by the receiver **140**. A portion of light from an emitted pulse of light may be scattered or reflected from a surface (e.g., a surface of a beam splitter or a surface of light source **110**, mirror **115**, or scanner **120**) located within lidar system **100** or sensor head

310. Some of the scattered or reflected light may be received by an APD **760** of receiver **140**, and a pulse-detection circuit **780** coupled to the APD **760** may determine that a pulse has been received. The time at which the pulse was received may be associated with the emission time of the pulse. In particular embodiments, receiver **140** may include one APD **760** and one pulse-detection circuit **780** configured to detect a portion of an emitted pulse of light that is scattered or reflected from within the lidar system **100** as well a portion of the pulse of light that is subsequently scattered by a target **130**. In particular embodiments, receiver **140** may include two APDs **760** and two pulse-detection circuits **780**. One APD **760** and pulse-detection circuit **780** may detect a portion of an emitted pulse of light that is scattered or reflected from within the lidar system **100**, and the other APD **760** and pulse-detection circuit **780** may detect a portion of the pulse of light scattered by a target **130**.

In particular embodiments, a lidar system **100** may include a processor configured to determine a distance D from the lidar system **100** to a target **130** based at least in part on a round-trip time of flight for a pulse of light emitted by the light source **110** to travel from the lidar system **100** to the target **130** and back to the lidar system **100**. In particular embodiments, a round-trip time of flight for a pulse of light may be determined based at least in part on a rising edge or a falling edge associated with the pulse of light detected by receiver **140**. As an example, a pulse of light detected by receiver **140** may generate a current pulse in an APD **760**, which results in a rising-edge signal produced by a comparator **786** coupled to the APD **760**. In particular embodiments, a lidar system **100** may include a TDC **788** configured to determine a time interval between emission of a pulse of light by light source **110** and detection by receiver **140** of at least a portion of the pulse of light scattered by a target **130**.

FIG. **39** illustrates an APD **760** coupled to an example multi-channel pulse-detection circuit **780**. In particular embodiments, a multi-channel pulse-detection circuit **780** may include two or more comparators **786** and a TDC **788** with two or more input channels. In the example of FIG. **39**, the multi-channel pulse detection circuit includes a TIA **782** that receives a current signal from APD **760** and a gain circuit **784** that boosts a voltage signal provided by TIA **782**. The amplified voltage signal from the gain circuit **784** is sent to the N comparators (comparators **786-1**, **786-2**, . . . , **786**-N), and each comparator is supplied with a particular reference or threshold voltage (V_{T1}, V_{T2}, . . . , $V_{T\text{-}N}$). In particular embodiments, a multi-channel pulse-detection circuit **780** may include 2, 3, 4, 6, 8, 16, 32, 64, 128, or any other suitable number of comparators **786**. As an example, a multi-channel pulse-detection circuit **780** may include N=8 comparators **786**, and each comparator may be configured to provide a rising or falling edge to TDC **788** when a voltage signal provided by TIA **782** or gain circuit **784** rises above or falls below a particular threshold voltage V_T. For example, four of the comparators **786** may provide a rising edge when the voltage signal rises above 0.2 V, 0.4 V, 0.6 V, and 0.8 V, respectively, and the other four comparators **786** may provide a falling edge when the voltage signal falls below 0.2 V, 0.4 V, 0.6 V, and 0.8 V, respectively. A multi-channel pulse-detection circuit **780** may provide additional information about a received pulse of light, such as for example, a shape of the pulse, a duration of the pulse, or timing information about the rising edge, falling edge, or peak of the pulse.

In particular embodiments, a multi-channel pulse-detection circuit **780** may include two comparators (**786-1**, **786-2**). The first comparator **786-1** may produce a first electrical-edge signal when a voltage signal provided by TIA **782** or gain circuit **784** rises above a threshold voltage V_{T1}. The second comparator **786-2** may produce a second electrical-edge signal when the voltage signal falls below a threshold voltage V_{T2}. The threshold voltages V_{T1} and V_{T2} may be the same or may be different voltages. As an example, if V_{T1} and V_{T2} are the same, the edge from the first comparator **786-1** may correspond to a particular level of a rising edge of a received pulse, and the edge from the second comparator **786-2** may correspond to the same level of a falling edge of the received pulse. Additionally, the time difference between the two edges may represent a width or duration of the pulse. In particular embodiments, a multi-channel pulse-detection circuit **780** may include a TDC **788** configured to receive the first and second electrical-edge signals from comparators **786-1** and **786-2**, respectively. The TDC **788** may determine a duration of the received pulse of light based on a time difference between receipt of the first and second electrical-edge signals. The TDC **788** may determine a first interval of time between emission of the pulse of light by the light source **110** and receipt of the first electrical-edge signal by the TDC **788**. Additionally, the TDC **788** may determine a second interval of time between emission of the pulse of light and receipt of the second electrical-edge signal. The TDC **788** may determine a time associated with a peak of the received pulse of light based at least in part on the first and second electrical-edge signals (e.g., the peak may be located approximately midway between the times associated with the first and second electrical-edge signals). In particular embodiments, a processor or controller **150** may determine a distance from the lidar system **100** to a target **130** based at least in part on a duration of a received pulse of light, a shape of a received pulse of light, a first or second interval of time associated with a rising or falling edge, respectively, of a received pulse of light, or a time associated with a peak of a received pulse of light.

FIG. **40** illustrates an example receiver **140** that includes two APDs (**760**A, **760**B) coupled to a logic circuit **792**. In particular embodiments, a receiver **140** may include two or more APDs **760** which are coupled to a logic circuit **792** (e.g., each APD may be coupled to the logic circuit through a pulse-detection circuit). The logic circuit **792** may include one or more logic gates (e.g., one or more AND gates), where the logic gates are configured to produce an output indicating that the receiver **140** has detected an optical pulse only if each of the APDs (**760**A, **760**B) or their associated pulse-detection circuits (**780**A, **780**B) produces an electrical signal corresponding to detection of the optical pulse. In the example of FIG. **40**, input beam **135** is split by beam splitter **790** into two beams which are coupled to APDs **760**A and **760**B. APD **760**A is coupled to pulse-detection circuit **780**A, and APD **760**B is coupled to pulse-detection circuit **780**B. Each pulse-detection circuit illustrated in FIG. **40** may include a TIA **782**, a gain circuit **784**, or a comparator **786**, and a comparator **786** of each pulse-detection circuit may provide a digital signal to the logic circuit **792**. The logic circuit **792** in FIG. **40** includes a single AND gate which may be configured to provide an electrical-edge signal to TDC **788** only if both pulse-detection circuits **780**A and **780**B provide a digital-high signal to the AND gate. The receiver **140** illustrated in FIG. **40** provides redundancy that may reduce the probability of false pulse-detection events caused by noise (e.g., noise in an APD resulting from dark current or thermally induced carrier generation). A noise event in APD **760**A or **760**B may cause an associated pulse-detection circuit **780**A or **780**B to produce a digital-high signal.

However, the AND gate will not send an electrical-edge signal to the TDC **788** if it receives a digital-high signal from only one of the pulse-detection circuits **780**A or **780**B. The AND gate will only send an electrical-edge signal to the TDC **788** if it receives a digital-high signal from both pulse-detection circuits **780**A and **780**B, which indicates that both APDs **760**A and **760**B have detected an optical pulse.

FIG. **41** illustrates an example detector array **796**. In particular embodiments, a receiver **140** may include an array **796** of two or more APDs **760**. A detector array **796** may include any suitable number or arrangement of APDs **760**. As an example, a detector array **796** may include two APDs **760** arranged side-by-side or one above the other. An arrangement of two side-by-side APDs **760** may be used to scan alternate pixels **210** across a field of regard (e.g., APD **760**C may detect light from odd-numbered pixels **210**, and APD **760**D may detect light from even-numbered pixels **210**). The detector array **796** in FIG. **41** includes six APDs (**760**C, **760**D, **760**E, **760**F, **760**G, and **760**H) arranged in a 2×3 configuration. A detector array **796** may allow a lidar system **100** to simultaneously scan multiple rows in a field of regard. As an example, detector **760**C or **760**D may scan a particular row (e.g., row #1), detector **760**E or **760**F may scan another row (e.g., row #17), and detector **760**G or **760**H may scan a different row (e.g., row #33). On a subsequent scan across the field of regard, detector **760**C or **760**D may scan row #2, detector **760**E or **760**F may scan row #18, and detector **760**G or **760**H may scan row #34.

FIG. **42** illustrates an example computer system **800**. In particular embodiments, one or more computer systems **800** may perform one or more steps of one or more methods described or illustrated herein. In particular embodiments, one or more computer systems **800** may provide functionality described or illustrated herein. In particular embodiments, software running on one or more computer systems **800** may perform one or more steps of one or more methods described or illustrated herein or may provide functionality described or illustrated herein. Particular embodiments may include one or more portions of one or more computer systems **800**. In particular embodiments, a computer system may be referred to as a computing device, a computing system, a computer, a general-purpose computer, or a data-processing apparatus. Herein, reference to a computer system may encompass one or more computer systems, where appropriate.

Computer system **800** may take any suitable physical form. As an example, computer system **800** may be an embedded computer system, a system-on-chip (SOC), a single-board computer system (SBC), a desktop computer system, a laptop or notebook computer system, a mainframe, a mesh of computer systems, a server, a tablet computer system, or any suitable combination of two or more of these. As another example, all or part of computer system **800** may be combined with, coupled to, or integrated into a variety of devices, including, but not limited to, a camera, camcorder, personal digital assistant (PDA), mobile telephone, smartphone, electronic reading device (e.g., an e-reader), game console, smart watch, clock, calculator, television monitor, flat-panel display, computer monitor, vehicle display (e.g., odometer display or dashboard display), vehicle navigation system, lidar system, ADAS, autonomous vehicle, autonomous-vehicle driving system, cockpit control, camera view display (e.g., display of a rear-view camera in a vehicle), eyewear, or head-mounted display. Where appropriate, computer system **800** may include one or more computer systems **800**; be unitary or distributed; span multiple locations; span multiple machines; span multiple data centers; or reside in a cloud, which may include one or more cloud components in one or more networks. Where appropriate, one or more computer systems **800** may perform without substantial spatial or temporal limitation one or more steps of one or more methods described or illustrated herein. As an example, one or more computer systems **800** may perform in real time or in batch mode one or more steps of one or more methods described or illustrated herein. One or more computer systems **800** may perform at different times or at different locations one or more steps of one or more methods described or illustrated herein, where appropriate.

As illustrated in the example of FIG. **42**, computer system **800** may include a processor **810**, memory **820**, storage **830**, an input/output (I/O) interface **840**, a communication interface **850**, or a bus **860**. Computer system **800** may include any suitable number of any suitable components in any suitable arrangement.

In particular embodiments, processor **810** may include hardware for executing instructions, such as those making up a computer program. As an example, to execute instructions, processor **810** may retrieve (or fetch) the instructions from an internal register, an internal cache, memory **820**, or storage **830**; decode and execute them; and then write one or more results to an internal register, an internal cache, memory **820**, or storage **830**. In particular embodiments, processor **810** may include one or more internal caches for data, instructions, or addresses. Processor **810** may include any suitable number of any suitable internal caches, where appropriate. As an example, processor **810** may include one or more instruction caches, one or more data caches, or one or more translation lookaside buffers (TLBs). Instructions in the instruction caches may be copies of instructions in memory **820** or storage **830**, and the instruction caches may speed up retrieval of those instructions by processor **810**. Data in the data caches may be copies of data in memory **820** or storage **830** for instructions executing at processor **810** to operate on; the results of previous instructions executed at processor **810** for access by subsequent instructions executing at processor **810** or for writing to memory **820** or storage **830**; or other suitable data. The data caches may speed up read or write operations by processor **810**. The TLBs may speed up virtual-address translation for processor **810**. In particular embodiments, processor **810** may include one or more internal registers for data, instructions, or addresses. Processor **810** may include any suitable number of any suitable internal registers, where appropriate. Where appropriate, processor **810** may include one or more arithmetic logic units (ALUs); may be a multi-core processor; or may include one or more processors **810**.

In particular embodiments, memory **820** may include main memory for storing instructions for processor **810** to execute or data for processor **810** to operate on. As an example, computer system **800** may load instructions from storage **830** or another source (such as, for example, another computer system **800**) to memory **820**. Processor **810** may then load the instructions from memory **820** to an internal register or internal cache. To execute the instructions, processor **810** may retrieve the instructions from the internal register or internal cache and decode them. During or after execution of the instructions, processor **810** may write one or more results (which may be intermediate or final results) to the internal register or internal cache. Processor **810** may then write one or more of those results to memory **820**. One or more memory buses (which may each include an address bus and a data bus) may couple processor **810** to memory **820**. Bus **860** may include one or more memory buses. In particular embodiments, one or more memory management

units (MMUs) may reside between processor **810** and memory **820** and facilitate accesses to memory **820** requested by processor **810**. In particular embodiments, memory **820** may include random access memory (RAM). This RAM may be volatile memory, where appropriate. Where appropriate, this RAM may be dynamic RAM (DRAM) or static RAM (SRAM). Memory **820** may include one or more memories **820**, where appropriate.

In particular embodiments, storage **830** may include mass storage for data or instructions. As an example, storage **830** may include a hard disk drive (HDD), a floppy disk drive, flash memory, an optical disc, a magneto-optical disc, magnetic tape, or a Universal Serial Bus (USB) drive or a combination of two or more of these. Storage **830** may include removable or non-removable (or fixed) media, where appropriate. Storage **830** may be internal or external to computer system **800**, where appropriate. In particular embodiments, storage **830** may be non-volatile, solid-state memory. In particular embodiments, storage **830** may include read-only memory (ROM). Where appropriate, this ROM may be mask ROM (MROM), programmable ROM (PROM), erasable PROM (EPROM), electrically erasable PROM (EEPROM), flash memory, or a combination of two or more of these. Storage **830** may include one or more storage control units facilitating communication between processor **810** and storage **830**, where appropriate. Where appropriate, storage **830** may include one or more storages **830**.

In particular embodiments, I/O interface **840** may include hardware, software, or both, providing one or more interfaces for communication between computer system **800** and one or more I/O devices. Computer system **800** may include one or more of these I/O devices, where appropriate. One or more of these I/O devices may enable communication between a person and computer system **800**. As an example, an I/O device may include a keyboard, keypad, microphone, monitor, mouse, printer, scanner, speaker, camera, stylus, tablet, touch screen, trackball, another suitable I/O device, or any suitable combination of two or more of these. An I/O device may include one or more sensors. Where appropriate, I/O interface **840** may include one or more device or software drivers enabling processor **810** to drive one or more of these I/O devices. I/O interface **840** may include one or more I/O interfaces **840**, where appropriate.

In particular embodiments, communication interface **850** may include hardware, software, or both providing one or more interfaces for communication (such as, for example, packet-based communication) between computer system **800** and one or more other computer systems **800** or one or more networks. As an example, communication interface **850** may include a network interface controller (NIC) or network adapter for communicating with an Ethernet or other wire-based network or a wireless NIC (WNIC); a wireless adapter for communicating with a wireless network, such as a WI-FI network; or an optical transmitter (e.g., a laser or a light-emitting diode) or an optical receiver (e.g., a photodetector) for communicating using fiber-optic communication or free-space optical communication. Computer system **800** may communicate with an ad hoc network, a personal area network (PAN), an in-vehicle network (IVN), a local area network (LAN), a wide area network (WAN), a metropolitan area network (MAN), or one or more portions of the Internet or a combination of two or more of these. One or more portions of one or more of these networks may be wired or wireless. As an example, computer system **800** may communicate with a wireless PAN (WPAN) (such as, for example, a BLUETOOTH WPAN), a WI-FI network, a Worldwide Interoperability for Microwave Access (WiMAX) network, a cellular telephone network (such as, for example, a Global System for Mobile Communications (GSM) network), or other suitable wireless network or a combination of two or more of these. As another example, computer system **800** may communicate using fiber-optic communication based on 100 Gigabit Ethernet (100 GbE), 10 Gigabit Ethernet (10 GbE), or Synchronous Optical Networking (SONET). Computer system **800** may include any suitable communication interface **850** for any of these networks, where appropriate. Communication interface **850** may include one or more communication interfaces **850**, where appropriate.

In particular embodiments, bus **860** may include hardware, software, or both coupling components of computer system **800** to each other. As an example, bus **860** may include an Accelerated Graphics Port (AGP) or other graphics bus, a controller area network (CAN) bus, an Enhanced Industry Standard Architecture (EISA) bus, a front-side bus (FSB), a HYPERTRANSPORT (HT) interconnect, an Industry Standard Architecture (ISA) bus, an INFINIBAND interconnect, a low-pin-count (LPC) bus, a memory bus, a Micro Channel Architecture (MCA) bus, a Peripheral Component Interconnect (PCI) bus, a PCI-Express (PCIe) bus, a serial advanced technology attachment (SATA) bus, a Video Electronics Standards Association local bus (VLB), or another suitable bus or a combination of two or more of these. Bus **860** may include one or more buses **860**, where appropriate.

In particular embodiments, various modules, circuits, systems, methods, or algorithm steps described in connection with the implementations disclosed herein may be implemented as electronic hardware, computer software, or any suitable combination of hardware and software. In particular embodiments, computer software (which may be referred to as software, computer-executable code, computer code, a computer program, computer instructions, or instructions) may be used to perform various functions described or illustrated herein, and computer software may be configured to be executed by or to control the operation of computer system **800**. As an example, computer software may include instructions configured to be executed by processor **810**. In particular embodiments, owing to the interchangeability of hardware and software, the various illustrative logical blocks, modules, circuits, or algorithm steps have been described generally in terms of functionality. Whether such functionality is implemented in hardware, software, or a combination of hardware and software may depend upon the particular application or design constraints imposed on the overall system.

The following paragraphs describe various specific embodiments of a lidar system and a laser system:

A lidar system comprising: a light source configured to emit pulses of light; a plurality of optical links, wherein each optical link couples the light source to a corresponding sensor head of a plurality of sensor heads, wherein the optical link is configured to convey at least a portion of the emitted pulses of light from the light source to the corresponding sensor head; and the plurality of sensor heads, wherein each sensor head comprises: a scanner configured to scan pulses of light across a field of regard of the sensor head, wherein the scanned pulses of light comprise the portion of the emitted pulses of light conveyed from the light source to the sensor head by the corresponding optical link; and a receiver configured to detect at least a portion of the scanned pulses of light scattered or reflected by a target located downrange from the sensor head.

The lidar system, wherein: the target is at least partially contained within the field of regard of the sensor head and is located a distance from the sensor head that is less than or equal to a maximum range of the lidar system; and the sensor head further comprises a processor configured to determine the distance from the sensor head to the target based at least in part on a time of flight for a pulse of light to travel from the sensor head to the target and back to the sensor head.

The lidar system, wherein the lidar system is incorporated into a vehicle wherein the sensor heads are positioned to provide a 360-degree view of an environment around the vehicle.

The lidar system, wherein each optical link comprises a fiber-optic cable having a length greater than or equal to 1 meter.

The lidar system, further comprising a plurality of electrical links corresponding to the plurality of optical links, wherein each electrical link couples the light source to a respective sensor head of the plurality of sensor heads, wherein the electrical link is configured to convey electrical power or one or more electrical signals between the light source and the respective sensor head.

The lidar system, wherein the light source comprises: a seed laser configured to produce low-power optical pulses; and one or more optical amplifiers configured to amplify the low-power optical pulses to produce the pulses of light emitted by the light source.

The lidar system, wherein the light source further comprises one or more optical filters, wherein each optical filter is configured to reduce an amount of amplified spontaneous emission light produced by one or more of the optical amplifiers.

The lidar system, wherein the light source further comprises a supplemental light source combined with the seed laser, wherein light from the supplemental light source is configured to prevent at least one of the optical amplifiers from spontaneously emitting an optical pulse during a time after amplification of a first low-power optical pulse and prior to receipt of a second low-power optical pulse.

The lidar system, wherein the light source comprises: a plurality of laser diodes, wherein each laser diode is configured to produce light at a different operating wavelength; and an optical multiplexer configured to combine the light produced by each laser diode into a single optical fiber.

The lidar system, wherein the light source comprises a wavelength-tunable laser configured to produce optical pulses at a plurality of wavelengths of light corresponding to the plurality of sensor heads, wherein each wavelength produced by the wavelength-tunable laser is conveyed to a corresponding sensor head.

The lidar system, wherein the light source comprises an optical amplifier comprising one or more optical filters, wherein each optical filter is configured to reduce an amount of amplified spontaneous emission light produced by the optical amplifier.

The lidar system, wherein: the lidar system comprises N optical links coupled to N respective sensor heads; and the light source comprises a 1×N optical demultiplexer configured to distribute the emitted pulses of light between the N optical links.

The lidar system, wherein the optical demultiplexer comprises an optical-power splitter, an optical switch, or a wavelength demultiplexer.

The lidar system, wherein distributing the emitted pulses of light between the N optical links comprises: splitting each emitted pulse of light into N pulses of light; and sending each pulse of the N pulses to a corresponding optical link for transmission to a corresponding sensor head.

The lidar system, wherein: the pulses of light emitted by the light source comprise pulses having N different wavelengths; and distributing the emitted pulses of light between the N optical links comprises sending each pulse having a particular wavelength to a corresponding optical link for transmission to a corresponding sensor head.

The lidar system, wherein each optical link comprises a gain fiber of a fiber-optic amplifier, wherein the gain fiber is configured to amplify the portion of the emitted pulses of light while propagating from the light source to the corresponding sensor head.

The lidar system, wherein each optical link comprises a gain fiber of an optical amplifier, wherein the gain fiber is distributed along a length of the optical link and is configured to amplify the portion of the emitted pulses of light while the portion of the emitted pulses of light is conveyed from the light source to the corresponding sensor head.

The lidar system, wherein each sensor head further comprises an optical amplifier configured to: amplify the pulses of light conveyed to the sensor head by the optical link; and send the amplified pulses of light to the scanner for scanning across the field of regard of the sensor head.

The lidar system, wherein the optical amplifier is a free-space amplifier or a fiber-optic amplifier.

A laser system comprising: a seed laser configured to produce optical seed pulses; a first fiber-optic amplifier configured to amplify the seed pulses by a first amplifier gain to produce a first-amplifier output that comprises amplified seed pulses and amplified spontaneous emission (ASE); a first optical filter configured to remove from the first-amplifier output an amount of the ASE; and a second fiber-optic amplifier configured to receive the amplified seed pulses from the first optical filter and amplify the received pulses by a second amplifier gain to produce output pulses, wherein the output pulses have output-pulse characteristics comprising: a pulse repetition frequency of less than or equal to 100 MHz; a pulse duration of less than or equal to 20 nanoseconds; and a duty cycle of less than or equal to 1%.

The laser system, wherein the output-pulse characteristics further comprise: an operating wavelength of between approximately 1400 nm and 2050 nm; a pulse energy of greater than or equal to 10 nanojoules; a peak power of greater than or equal to 1 watt; and an average power of less than or equal to 50 watts, wherein the ASE comprises less than or equal to 25% of the average power.

The laser system, wherein: the optical seed pulses have an average power of greater than or equal to 1 microwatt; the output pulses have an average power of greater than or equal to 1 milliwatt; and the first amplifier gain and the second amplifier gain together correspond to an overall optical power gain of greater than or equal to 40 dB.

The laser system, wherein the seed laser comprises a laser diode configured to be electrically driven by a pulse generator to produce the optical seed pulses.

The laser system, wherein the seed laser comprises: a laser diode configured to produce continuous-wave (CW) light; and an optical modulator configured to receive the CW light and produce the optical seed pulses from the received CW light.

The laser system, wherein the seed laser comprises: a laser diode configured to produce optical pulses having a duration τ; and an optical modulator configured to: receive the optical pulses from the laser diode; and selectively transmit a portion of each of the received optical pulses to

produce the optical seed pulses, wherein each optical seed pulse has a duration less than τ.

The laser system, wherein the seed laser comprises: a plurality of laser diodes, wherein each laser diode is configured to produce light at a different wavelength; and an optical multiplexer configured to combine the light produced by each laser diode into a single optical fiber.

The laser system, further comprising a wavelength-dependent delay line configured to receive input light comprising a plurality of operating wavelengths of the laser system and produce time-delayed light, wherein the time-delayed light comprises the light at the plurality of operating wavelengths, wherein each wavelength of the plurality of operating wavelengths has a particular time delay based on the wavelength.

The laser system, wherein the delay line comprises: a circulator; and a plurality of fiber Bragg gratings (FBGs) corresponding to the plurality of operating wavelengths, wherein: the FBGs are arranged in series and separated from one another by a particular length of optical fiber; and each FBG is configured to reflect one wavelength of the operating wavelengths.

The laser system, wherein the seed laser comprises a wavelength-tunable laser configured to produce light at a plurality of wavelengths.

The laser system, wherein the seed laser comprises a mode-locked fiber laser and a pulse picker configured to extract optical pulses produced by the mode-locked fiber laser.

The laser system, wherein the first optical filter is configured to remove greater than or equal to 80% of the ASE from the first-amplifier output.

The laser system, wherein the first optical filter comprises a spectral filter configured to transmit light at one or more operating wavelengths of the laser system and attenuate light away from the transmitted wavelengths by at least 20 dB.

The laser system, wherein the first optical filter comprises a temporal filter comprising an optical switch or a semiconductor optical amplifier, wherein the temporal filter is configured to be in a transmitting state when an amplified seed pulse is present and to be in a non-transmitting state otherwise, wherein when operating in the non-transmitting state, the ASE is substantially prevented from being transmitted through the first optical filter.

The laser system, further comprising a second optical filter configured to receive the output pulses from the second amplifier and reduce an amount of ASE produced by the second amplifier.

The laser system, further comprising an optical demultiplexer configured to receive the output pulses from the second fiber-optic amplifier and distribute the output pulses to a plurality of optical links of a lidar system, wherein the optical links are coupled to a respective plurality of sensor heads of the lidar system.

The laser system, further comprising an output collimator configured to receive the output pulses from the second fiber-optic amplifier and produce a free-space optical beam comprising the output pulses.

The laser system, wherein: the first fiber-optic amplifier comprises a double-pass amplifier comprising: a circulator; an erbium-doped or erbium/ytterbium-doped gain fiber comprising a first end and a second end, wherein the first end is coupled to the circulator; and a fiber Bragg grating (FBG) coupled to the second end of the gain fiber, wherein the FBG is configured to reflect light corresponding to one or more operating wavelengths of the laser system and transmit or attenuate light that is away from the reflected wavelengths; and the second fiber-optic amplifier comprises a booster amplifier comprising a double-clad gain fiber comprising erbium dopants or erbium and ytterbium dopants.

The laser system, wherein: the first fiber-optic amplifier comprises a first single-pass amplifier comprising a first gain fiber comprising erbium dopants or erbium and ytterbium dopants; the second fiber-optic amplifier comprises a second single-pass amplifier comprising a second gain fiber comprising erbium dopants or erbium and ytterbium dopants; and the laser system further comprises a third fiber-optic amplifier, wherein the third amplifier comprises a booster amplifier comprising a double-clad gain fiber comprising erbium dopants or erbium and ytterbium dopants.

The laser system, wherein: the first fiber-optic amplifier comprises a double-pass amplifier comprising: a circulator; an erbium-doped or erbium/ytterbium-doped gain fiber comprising a first end and a second end, wherein the first end is coupled to the circulator; and a fiber Bragg grating (FBG) coupled to the second end of the gain fiber, wherein the FBG is configured to reflect light corresponding to one or more operating wavelengths of the laser system and transmit or attenuate light that is away from the reflected wavelengths; the second fiber-optic amplifier comprises a single-pass amplifier comprising erbium-doped or erbium/ytterbium-doped gain fiber; and the laser system further comprises a third fiber-optic amplifier, wherein the third amplifier comprises a booster amplifier comprising a double-clad gain fiber comprising erbium dopants or erbium and ytterbium dopants.

The laser system, wherein the second fiber-optic amplifier comprises a booster amplifier comprising a double-clad gain fiber comprising erbium dopants or erbium and ytterbium dopants.

The laser system, wherein the booster amplifier further comprises a cladding mode stripper.

The laser system, wherein the seed laser, the first amplifier, the first optical filter, and the second amplifier are packaged together within a single housing.

The laser system, wherein the laser system further comprises a third fiber-optic amplifier configured to receive the output pulses from the second amplifier and amplify the output pulses by a third amplifier gain, wherein the third amplifier comprises a booster amplifier comprising a double-clad gain fiber comprising erbium dopants or erbium and ytterbium dopants.

The laser system, wherein the laser system is part of a lidar system comprising a light source, an optical link, and a sensor head, wherein: the optical link couples the light source to the sensor head; the seed laser is disposed in the light source; the first fiber-optic amplifier is disposed in the light source, the optical link, or the sensor head; and the second fiber-optic amplifier is disposed in the light source, the optical link, or the sensor head.

The laser system, wherein: the first and second amplifiers are disposed in the light source; and the laser system further comprises a third fiber-optic amplifier comprising a gain fiber distributed along a length of the optical link.

The laser system, wherein: the first amplifier is disposed in the light source; and the second amplifier comprises a gain fiber distributed along a length of the optical link.

The laser system, wherein: the first and second amplifiers are disposed in the light source; and the laser system further comprises a third amplifier disposed in the sensor head, wherein the third amplifier comprises a free-space amplifier or a fiber-optic amplifier.

The laser system, wherein: the first amplifier is disposed in the light source; the second amplifier comprises a gain

fiber distributed along a length of the optical link; and the laser system further comprises a third amplifier disposed in the sensor head, wherein the third amplifier comprises a free-space amplifier or a fiber-optic amplifier.

A lidar system comprising: a light source configured to emit pulses of light; a scanner configured to scan at least a portion of the emitted pulses of light across a field of regard; and a receiver configured to detect at least a portion of the scanned pulses of light scattered by a target located a distance from the lidar system.

The lidar system, further comprising a sensor head located remotely from the light source, wherein: the sensor head comprises the scanner and the receiver; and the sensor head is coupled to the light source by an optical link, wherein the optical link conveys the portion of the emitted pulses of light from the light source to the sensor head.

The lidar system, wherein the lidar system further comprises one or more additional sensor heads, wherein: each of the additional sensor heads comprises a respective scanner and receiver; and the light source is coupled to each of the additional sensor heads by a respective optical link which conveys a respective portion of the emitted pulses of light from the light source to each of the additional sensor heads.

The lidar system, wherein the lidar system is incorporated into a vehicle wherein the sensor head and one or more additional sensor heads of the lidar system are positioned to provide a greater than or equal to 30-degree view of an environment around the vehicle.

The lidar system, wherein the lidar system has a maximum range of greater than or equal to 50 meters.

The lidar system, wherein the field of regard comprises: a horizontal field of regard greater than or equal to 25 degrees; and a vertical field of regard greater than or equal to 5 degrees.

The lidar system, wherein the lidar system has a horizontal resolution of greater than or equal to 100 pixels and a vertical resolution of greater than or equal to 4 pixels.

The lidar system, wherein the lidar system is configured to generate point clouds at a rate between approximately 0.1 frames per second and approximately 1,000 frames per second.

The lidar system of, wherein the light source comprises a pulsed laser diode.

The lidar system, wherein the light source comprises: a seed laser configured to produce optical seed pulses; and one or more optical amplifiers configured to amplify the optical seed pulses to produce the pulses of light emitted by the light source.

The lidar system, wherein the seed laser comprises a distributed-feedback (DFB) laser or a distributed-Bragg reflector (DBR) laser.

The lidar system, wherein the light source comprises a booster amplifier comprising a double-clad gain fiber comprising erbium dopants or erbium and ytterbium dopants.

The lidar system, wherein the light source comprises: a plurality of laser diodes, wherein each laser diode is configured to produce light at a different operating wavelength; and an optical multiplexer configured to combine the light produced by each laser diode into a single optical fiber.

The lidar system, wherein the light source is an eye-safe laser with an operating wavelength between approximately 1400 nm and approximately 1600 nm.

The lidar system, wherein the pulses of light emitted by the light source have pulse characteristics comprising: an operating wavelength between approximately 1400 nm and approximately 1600 nm; a pulse repetition frequency of less than or equal to 100 MHz; a pulse duration of less than or equal to 20 nanoseconds; and a duty cycle of less than or equal to 1%.

The lidar system, wherein the pulse characteristics further comprise: a pulse energy of greater than or equal to 10 nanojoules; a peak power of greater than or equal to 1 watt; and an average power of less than or equal to 50 watts.

The lidar system, wherein the light source comprises an optical filter configured to transmit light at one or more operating wavelengths of the light source and attenuate light away from the transmitted wavelengths by at least 10 dB.

The lidar system, wherein the light source comprises an optical filter configured to reduce an amount of amplified spontaneous emission light produced by one or more optical amplifiers of the light source.

The lidar system, wherein the light source comprises a diode-pumped solid-state (DPSS) laser.

The lidar system, wherein the scanner comprises one or more mirrors, wherein each mirror is mechanically driven by a galvanometer scanner, a resonant scanner, a microelectromechanical systems (MEMS) device, or a voice coil motor.

The lidar system, wherein the scanner comprises: a first mirror driven by a first galvanometer scanner that scans the first mirror along a first direction; and a second mirror driven by a second galvanometer scanner that scans the second mirror along a second direction substantially orthogonal to the first direction.

The lidar system, wherein the scanner comprises: a first mirror driven by a resonant scanner that scans the first mirror along a first direction; and a second mirror driven by a galvanometer scanner that scans the second mirror along a second direction substantially orthogonal to the first direction.

The lidar system, wherein the scanner comprises two mirrors driven synchronously, wherein the synchronously driven mirrors trace out a scan pattern that comprises substantially straight lines.

The lidar system, wherein the scanner comprises a mirror driven by two actuators configured to scan the mirror along two substantially orthogonal directions.

The lidar system, wherein the scanner comprises a mirror configured to be scanned along two axes, wherein motion along each axis is provided by two actuators arranged in a push-pull configuration.

The lidar system, wherein: an output beam of the lidar system comprises the portion of the emitted pulses of light which are scanned across the field of regard; an input beam of the lidar system comprises the portion of the scanned pulses of light detected by the receiver; and the input and output beams are substantially coaxial.

The lidar system, further comprising an overlap mirror configured to overlap the input and output beams so that they are substantially coaxial, wherein the overlap mirror comprises: a hole, slot, or aperture which the output beam passes through; and a reflecting surface that reflects at least a portion of the input beam toward the receiver.

The lidar system, wherein: scanning the portion of the emitted pulses of light across the field of regard comprises scanning a field of view of the light source across the field of regard; and the scanner is further configured to scan a field of view of the receiver across the field of regard, wherein the light-source field of view and the receiver field of view are scanned synchronously with respect to one another.

The lidar system, wherein the light-source field of view and the receiver field of view are at least partially overlapped during scanning.

The lidar system, wherein: the light-source field of view and the receiver field of view are scanned along a scanning direction; and the receiver field of view is offset from the light-source field of view in a direction opposite the scanning direction.

The lidar system, wherein an angular extent of the light-source field of view is approximately equal to an angular extent of the receiver field of view.

The lidar system, wherein: the light-source field of view has an angular extent of less than or equal to 50 milliradians; and the receiver field of view has an angular extent of less than or equal to 50 milliradians.

The lidar system, wherein: the receiver comprises an avalanche photodiode (APD); and detecting the portion of the scanned pulses of light scattered by the target comprises: receiving, by the APD, a pulse of light of the portion of the scanned pulses of light scattered by the target; and generating, by the APD, an electrical-current signal corresponding to the received pulse of light.

The lidar system, wherein the receiver further comprises a transimpedance amplifier configured to receive the electrical-current signal from the APD and produce a voltage signal that corresponds to the received electrical-current signal.

The lidar system, wherein the receiver further comprises a comparator configured to produce an electrical-edge signal when a voltage signal corresponding to the electrical-current signal generated by the APD rises above a predetermined threshold voltage.

The lidar system, further comprising a time-to-digital converter (TDC) configured to: receive the electrical-edge signal; and determine an interval of time between emission of the pulse of light by the light source and receipt of the electrical-edge signal.

The lidar system, wherein determining the interval of time comprises determining a time associated with the emission of the pulse of light by the light source, wherein the time associated with the emission of the pulse of light is determined based at least in part on detection by the receiver of a portion of light from the emitted pulse of light.

The lidar system, further comprising a processor configured to determine the distance from the lidar system to the target based at least in part on the interval of time determined by the TDC.

The lidar system, wherein the receiver further comprises: a first comparator configured to produce a first electrical-edge signal when a voltage signal corresponding to the electrical-current signal generated by the APD rises above a first predetermined threshold voltage; a second comparator configured to produce a second electrical-edge signal when the voltage signal falls below a second predetermined threshold voltage; and a time-to-digital converter (TDC) configured to: receive the first and second electrical-edge signals; determine a first interval of time between emission of the pulse of light by the light source and receipt of the first electrical-edge signal; and determine a second interval of time between emission of the pulse of light by the light source and receipt of the second electrical-edge signal.

The lidar system, further comprising a processor configured to determine the distance from the lidar system to the target based at least in part on the first and second intervals of time.

The lidar system, further comprising an optical filter located in front of the receiver, wherein the optical filter is configured to transmit light at one or more operating wavelengths of the light source and attenuate light at surrounding wavelengths by at least 10 dB.

The lidar system, wherein the receiver comprises an array of two or more avalanche photodiodes (APDs).

The lidar system, wherein the receiver comprises: an avalanche photodiode (APD) configured to operate as a single-photon avalanche diode (SPAD); and a quenching circuit configured to reduce a reverse-bias voltage applied to the SPAD when an avalanche event occurs in the SPAD.

The lidar system, wherein the receiver comprises: two or more avalanche photodiodes (APDs); and one or more logic gates coupled to the APDs, wherein the logic gates are configured to produce an output indicating that the receiver has detected an optical pulse only if each of the APDs produces an electrical signal corresponding to detection of the optical pulse.

The lidar system, further comprising a processor configured to determine the distance from the lidar system to the target based at least in part on a round-trip time of flight for a pulse of light emitted by the light source to travel from the lidar system to the target and back to the lidar system.

The lidar system, wherein the round-trip time of flight is determined based at least in part on a rising edge or a falling edge associated with the pulse of light detected by the receiver.

The lidar system, further comprising a time-to-digital converter (TDC) configured to determine a time interval between emission of a pulse of light by the light source and detection by the receiver of at least a portion of the pulse of light scattered by the target.

In particular embodiments, a computing device may be used to implement various modules, circuits, systems, methods, or algorithm steps disclosed herein. As an example, all or part of a module, circuit, system, method, or algorithm disclosed herein may be implemented or performed by a general-purpose single- or multi-chip processor, a digital signal processor (DSP), an ASIC, a FPGA, any other suitable programmable-logic device, discrete gate or transistor logic, discrete hardware components, or any suitable combination thereof. A general-purpose processor may be a microprocessor, or, any conventional processor, controller, microcontroller, or state machine. A processor may also be implemented as a combination of computing devices, e.g., a combination of a DSP and a microprocessor, a plurality of microprocessors, one or more microprocessors in conjunction with a DSP core, or any other such configuration.

In particular embodiments, one or more implementations of the subject matter described herein may be implemented as one or more computer programs (e.g., one or more modules of computer-program instructions encoded or stored on a computer-readable non-transitory storage medium). As an example, the steps of a method or algorithm disclosed herein may be implemented in a processor-executable software module which may reside on a computer-readable non-transitory storage medium. In particular embodiments, a computer-readable non-transitory storage medium may include any suitable storage medium that may be used to store or transfer computer software and that may be accessed by a computer system. Herein, a computer-readable non-transitory storage medium or media may include one or more semiconductor-based or other integrated circuits (ICs) (such, as for example, field-programmable gate arrays (FPGAs) or application-specific ICs (ASICs)), hard disk drives (HDDs), hybrid hard drives (HHDs), optical discs (e.g., compact discs (CDs), CD-ROM, digital versatile discs (DVDs), blue-ray discs, or laser discs), optical disc drives (ODDs), magneto-optical discs, magneto-optical drives, floppy diskettes, floppy disk drives (FDDs), magnetic tapes, flash memories, solid-state drives (SSDs),

RAM, RAM-drives, ROM, SECURE DIGITAL cards or drives, any other suitable computer-readable non-transitory storage media, or any suitable combination of two or more of these, where appropriate. A computer-readable non-transitory storage medium may be volatile, non-volatile, or a combination of volatile and non-volatile, where appropriate.

In particular embodiments, certain features described herein in the context of separate implementations may also be combined and implemented in a single implementation. Conversely, various features that are described in the context of a single implementation may also be implemented in multiple implementations separately or in any suitable sub-combination. Moreover, although features may be described above as acting in certain combinations and even initially claimed as such, one or more features from a claimed combination may in some cases be excised from the combination, and the claimed combination may be directed to a sub-combination or variation of a sub-combination.

While operations may be depicted in the drawings as occurring in a particular order, this should not be understood as requiring that such operations be performed in the particular order shown or in sequential order, or that all operations be performed. Further, the drawings may schematically depict one more example processes or methods in the form of a flow diagram or a sequence diagram. However, other operations that are not depicted may be incorporated in the example processes or methods that are schematically illustrated. For example, one or more additional operations may be performed before, after, simultaneously with, or between any of the illustrated operations. Moreover, one or more operations depicted in a diagram may be repeated, where appropriate. Additionally, operations depicted in a diagram may be performed in any suitable order. Furthermore, although particular components, devices, or systems are described herein as carrying out particular operations, any suitable combination of any suitable components, devices, or systems may be used to carry out any suitable operation or combination of operations. In certain circumstances, multitasking or parallel processing operations may be performed. Moreover, the separation of various system components in the implementations described herein should not be understood as requiring such separation in all implementations, and it should be understood that the described program components and systems may be integrated together in a single software product or packaged into multiple software products.

Various embodiments have been described in connection with the accompanying drawings. However, it should be understood that the figures may not necessarily be drawn to scale. As an example, distances or angles depicted in the figures are illustrative and may not necessarily bear an exact relationship to actual dimensions or layout of the devices illustrated.

The scope of this disclosure encompasses all changes, substitutions, variations, alterations, and modifications to the example embodiments described or illustrated herein that a person having ordinary skill in the art would comprehend. The scope of this disclosure is not limited to the example embodiments described or illustrated herein. Moreover, although this disclosure describes or illustrates respective embodiments herein as including particular components, elements, functions, operations, or steps, any of these embodiments may include any combination or permutation of any of the components, elements, functions, operations, or steps described or illustrated anywhere herein that a person having ordinary skill in the art would comprehend.

The term "or" as used herein is to be interpreted as an inclusive or meaning any one or any combination, unless expressly indicated otherwise or indicated otherwise by context. Therefore, herein, the expression "A or B" means "A, B, or both A and B." As another example, herein, "A, B or C" means at least one of the following: A; B; C; A and B; A and C; B and C; A, B and C. An exception to this definition will occur if a combination of elements, devices, steps, or operations is in some way inherently mutually exclusive.

As used herein, words of approximation such as, without limitation, "approximately," "substantially," or "about" refer to a condition that when so modified is understood to not necessarily be absolute or perfect but would be considered close enough to those of ordinary skill in the art to warrant designating the condition as being present. The extent to which the description may vary will depend on how great a change can be instituted and still have one of ordinary skill in the art recognize the modified feature as having the required characteristics or capabilities of the unmodified feature. In general, but subject to the preceding discussion, a numerical value herein that is modified by a word of approximation such as "approximately" may vary from the stated value by ±0.5%, ±1%, ±2%, ±3%, ±4%, ±5%, ±10%, ±12%, or ±15%.

As used herein, the terms "first," "second," "third," etc. may be used as labels for nouns that they precede, and these terms may not necessarily imply a particular ordering (e.g., a particular spatial, temporal, or logical ordering). As an example, a system may be described as determining a "first result" and a "second result," and the terms "first" and "second" may not necessarily imply that the first result is determined before the second result.

As used herein, the terms "based on" and "based at least in part on" may be used to describe or present one or more factors that affect a determination, and these terms may not exclude additional factors that may affect a determination. A determination may be based solely on those factors which are presented or may be based at least in part on those factors. The phrase "determine A based on B" indicates that B is a factor that affects the determination of A. In some instances, other factors may also contribute to the determination of A. In other instances, A may be determined based solely on B.

What is claimed is:

1. A lidar system comprising:

one or more light sources configured to produce one or more optical signals;

a demultiplexer configured to separate the one or more optical signals into a plurality of sub-portions and to distribute the plurality of sub-portions of the one or more optical signals via a plurality of optical links, wherein:

the one or more optical signals comprise a plurality of pulses; and

the plurality of sub-portions of the one or more optical signals comprise sub-portions of each of the plurality of pulses, wherein the sub-portions of each of the plurality of pulses are unequal;

a plurality of sensor heads configured to respectively receive the plurality of sub-portions of the one or more optical signals via the plurality of optical links, the plurality of sensor heads further being configured to emit the plurality of sub-portions of the one or more optical signals into a plurality of fields of view and to detect reflected or scattered light from the plurality of fields of view;

one or more optical amplifiers configured to amplify the one or more optical signals or the plurality of sub-portions of the one or more optical signals; and

one or more filters configured to reduce amplified spontaneous emission produced by the one or more optical amplifiers.

2. The lidar system of claim **1**, wherein the plurality of sensor heads respectively comprise a plurality of scanners, each of the plurality of scanners being configured to scan at least one of the sub-portions of the one or more optical signals within a corresponding field of regard that includes at least one of the plurality of fields of view.

3. The lidar system of claim **1**, wherein the plurality of sensor heads respectively comprise a plurality of receivers to detect the reflected or scattered light.

4. The lidar system of claim **1**, wherein the plurality of sensor heads respectively comprise a plurality of processors, each of the plurality of processors being configured to determine a distance to a target based on at least a portion of the reflected or scattered light.

5. The lidar system of claim **4**, wherein each of the plurality of processors is configured to determine the distance to the target based at least in part on a roundtrip time of flight for a pulse of light traveling between the sensor head and the target.

6. The lidar system of claim **1**, wherein the lidar system is incorporated into a vehicle.

7. The lidar system of claim **6**, wherein the sensor heads are positioned about the vehicle to provide at least a 180-degree view of an environment around the vehicle.

8. The lidar system of claim **1**, further comprising the plurality of optical links.

9. The lidar system of claim **8**, where at least one of the optical links comprises a fiber-optic cable having a length greater than or equal to 1 meter.

10. The lidar system of claim **8**, further comprising a plurality of electrical links respectively corresponding to the plurality of optical links, the plurality of electrical links being configured to convey electrical signals to the plurality of sensor heads.

11. The lidar system of claim **1**, wherein the one or more light sources comprise one or more seed lasers configured to produce the one or more optical signals.

12. The lidar system of claim **11**, wherein:

the plurality of pulses comprises a first pulse and a second pulse; and

the one or more light sources further comprise one or more supplemental light sources whose light is combined with that of the one or more seed lasers prior to amplification in order to reduce the likelihood of at least one of the one or more optical amplifiers spontaneously emitting amplified light during a time between the first pulse and the second pulse.

13. The lidar system of claim **1**, wherein the one or more light sources are configured to produce light at a plurality of different operating wavelengths.

14. The lidar system of claim **1**, further comprising an optical multiplexer configured to combine a plurality of the one or more optical signals from a plurality of the one or more light sources into a single optical fiber.

15. The lidar system of claim **14**, wherein the output of the optical multiplexer is provided to the one or more optical amplifiers to amplify the plurality of the one or more optical signals.

16. The lidar system of claim **1**, wherein the plurality of sub-portions of the one or more optical signals comprise a plurality of wavelengths of light, and wherein the plurality of sub-portions of the one or more optical signals are respectively distributed to the plurality of sensor heads.

17. The lidar system of claim **16**, wherein the plurality of sub-portions of the one or more optical signals comprising a plurality of wavelengths of light are emitted by a plurality of the one or more light sources respectively operating at the plurality of wavelengths or by a tunable light source operating at the plurality of wavelengths.

18. The lidar system of claim **1**, wherein the demultiplexer comprises an optical power splitter, an optical switch, or a wavelength demultiplexer.

19. The lidar system of claim **1**, wherein:

the plurality of sensor heads are provided about a vehicle; and

stronger ones of the sub-portions of each of the plurality of pulses are provided to forward-facing sensor heads on the vehicle.

20. The lidar system of claim **1**, wherein:

the plurality of sensor heads are provided about a vehicle; and

weaker ones of the sub-portions of each of the plurality of pulses are provided to rear-facing sensor heads on the vehicle.

21. The lidar system of claim **1**, wherein a plurality of the one or more optical amplifiers respectively comprise the plurality of optical links.

22. A lidar system comprising:

one or more light sources configured to produce one or more optical signals, wherein:

the one or more light sources comprise one or more seed lasers configured to produce the one or more optical signals; and

the one or more optical signals comprise a first pulse and a second pulse;

a demultiplexer configured to separate the one or more optical signals into a plurality of sub-portions and to distribute the plurality of sub-portions of the one or more optical signals via a plurality of optical links;

a plurality of sensor heads configured to respectively receive the plurality of sub-portions of the one or more optical signals via the plurality of optical links, the plurality of sensor heads further being configured to emit the plurality of sub-portions of the one or more optical signals into a plurality of fields of view and to detect reflected or scattered light from the plurality of fields of view;

one or more optical amplifiers configured to amplify the one or more optical signals or the plurality of sub-portions of the one or more optical signals, wherein the one or more light sources further comprise one or more supplemental light sources whose light is combined with that of the one or more seed lasers prior to amplification in order to reduce the likelihood of at least one of the one or more optical amplifiers spontaneously emitting amplified light during a time between the first pulse and the second pulse; and

one or more filters configured to reduce amplified spontaneous emission produced by the one or more optical amplifiers.

23. The lidar system of claim **22**, wherein the plurality of sensor heads respectively comprise a plurality of processors, each of the plurality of processors being configured to determine a distance to a target based on at least a portion of the reflected or scattered light.

24. The lidar system of claim **22**, wherein the lidar system is incorporated into a vehicle.

25. The lidar system of claim **22**, wherein the demultiplexer comprises an optical power splitter, an optical switch, or a wavelength demultiplexer.

* * * * *