IN THE UNITED STATES PATENT AND TRADEMARK OFFICE

In re Patent of:	Angus Pacala et al.	
U.S. Patent No.:	11,190,750	Attorney Docket No.: 56432-0092IP2
Issue Date:	November 3, 2021	
Appl. Serial No.:	16/046,643	
Filing Date:	July 26, 2018	
Title:	OPTICAL IMAGING SYSTEM WITH A PLURALITY OF SENSE CHANNELS	

DECLARATION OF JAMES F. SHANLEY, PH.D.

TABLE OF CONTENTS

I. INTRODUCTION 1

II. BACKGROUND AND QUALIFICATIONS 2

III. MATERIALS REVIEWED AND CONSIDERED 6

IV. LEGAL UNDERSTANDING 6

A. The Person of Ordinary Skill in the Art 7

B. Claim Construction 7

C. Obviousness 7

V. SUMMARY OF OPINIONS 10

VI. TECHNOLOGY BACKGROUND 11

A. Overview of LiDAR and Time-of-Flight 11

B. LiDAR Basics 16

C. LiDAR System Design and Elements 19

VII. THE '750 PATENT 31

A. Overview 31

B. Specification 32

C. Prosecution History 34

D. Claims 34

VIII. LEVEL OF ORDINARY SKILL IN THE ART 36

IX. CLAIM CONSTRUCTION 38

X. OVERVIEW OF THE PRIOR ART 39

A. U.S. Patent No. 10,203,399 ("Retterath") 39

B. U.S. Patent App. Pub. No. US 2013/0300838 ("Borowski") 44

C. U.S. Patent Pub. No. 2014/0211194 ("Pacala").....47

D. U.S. Patent No. 8,736,818 ("Weimer") 48

E. U.S. Patent No. 7,787,105 ("Hipp").....49

F. U.S. Patent App. Pub. No. 20160274223 ("Imai") 51

G. JP Publication No. JP 2015-078953 ("Higashi") 58

H. U.S. Patent Application Publication No. 2017/0040368 to Grzesik ("Grzesik") 60

XI. OBVIOUSNESS ANALYSIS FOR THE CHALLENGED CLAIMS.....62

A. Ground 1A: Retterath and Borowski Render Obvious Claims 44, 45, 48, and 50 62

B. Ground 1B: Retterath, Borowski, and Weimer Render Obvious Claims 44-48 and 50 95

C. Ground 1C: Retterath, Borowski, and Hipp Render Obvious Claims 44, 45, 48, and 50.....104

D. Ground 1D: Retterath, Borowski, Weimer, and Hipp Render Obvious Claims 44-48, 50.....109

E. Ground 2 – Claims 44-48, 50 are obvious based on Imai, Higashi, and Grzesik 109

F. Ground 3 – Claims 44-48 and 50 are obvious based on Weimer, Borowski, and Hipp 135

G. Secondary Considerations.....150

XII. CONCLUSION 150

EXHIBIT LIST

No.	Short Name	Exhibit
1001	’750 Patent	U.S. Patent No. 11,190,750 to Pacala *et al*.
1002	’750 Prosecution History	Prosecution history for U.S. Patent No. 11,190,750
1004	My CV	My Curriculum Vitae
1005	Retterath	U.S. Patent No. 10,203,399 to Retterath *et al*.
1006	Borowski	U.S. Patent Pub. No. 2013/0300838 to Borowski
1007	Hipp	U.S. Patent No. 7,787,105 to Hipp
1008	Weimer	U.S. Patent No. 8,736,818 to Weimer *et al*
1009	Imai	U.S. Patent App. Pub. No. 2016/0274223
1010	Higashi	JP Publication No. JP 2015-078953 (“Higashi”)
1011	Higashi	Certified English Translation of JP Publication No. JP 2015-078953
1012	Grzesik	U.S. Patent Application Publication No. US2017/0040368 to Grzesik
1013	Pacala	U.S. Patent App. Pub. No. 2014/0211194 (“Pacala”)
1014	Lee Sensors	Lee *et al.*, “Accuracy-Power Controllable LiDAR Sensor System with 3D Object Recognition for Autonomous Vehicle,” in *Sensors*, Vol. 20, Iss. 19 (Oct. 2020)
1015	ITC Termination	ITC Inv. No. 337-TA-1363, Certain Lidar (Light Detection and Ranging) Systems And Components Thereof, EDIS Document Details

No.	Short Name	Exhibit
1016	Pennecot	U.S. Patent No. 9,651,658 to Pennecot *et al.*
1017	Tan	U.S. Patent No. 7,544,945 to Tan *et al.*
1018	Hipp-747	U.S. Patent No. 6,747,747 to Hipp
1019	Marino	Marino *et al.*, *A compact 3D imaging laser radar system using Geiger-mode APD arrays: system and measurements*, MIT Lincoln Lab (2003)
1020	ITC Complaint	Complaint in ITC Inv. No. 337-TA-1363
1021	Delaware Complaint	Complaint in *Ouster, Inc. v. Hesai Group et al*, No. 23-cv-00406 (D. Del.)
1022	Stay Order	Order Granting Stay in *Ouster, Inc. v. Hesai Group et al.*, No. 23-cv-00406 (D. Del.)
1023	Matsubara	Matsubara *et al.*, *Development of Next Generation LiDAR*, R&D Review of Toyota CRDL (2012)
1024	Hall	U.S. Patent No. 7,969,558 to Hall *et al*
1025	Li	U.S. Patent No. 10,199,801 to Li *et al.*
1026	JCC	Joint Claim Construction Statement from ITC Inv. No. 337-TA-1363
1027	Imai Priority	Certified English Translation of JP 2015-055314
1028	Albert	U.S. Patent Pub. No. 2016/0327639 to Albert *et al*
1029	Delic	PCT Pub. No. WO2017/004663 to Delic *et al*
1030	Spies-041	German Pat No. DE 10 2004 014 041 B4 ("Spies-041")

No.	Short Name	Exhibit
1031	Spies-041	Certified English Translation of DE 10 2004 014 041 B4 ("Spies-041")
1032	Spies-977	German Pat. No. DE 101 53 977 B4 ("Spies-977")
1033	Spies-977	Certified English Translation of DE 101 53 977 B4 ("Spies-977")
1034	IEEE Review	Donati, Silvano, *Photodetectors: Devices, Circuits and Applications*, Chapter 6, 2d Ed., The Institute of Electrical and Electronics Engineers, Inc. (2021, John Wiley & Sons, Inc.)
1035	NIST	*Performance Analysis of Next-Generation LADAR for Manufacturing, Construction, and Mobility*, National Institute of Standards and Technology (2004)
1036	Droz	U.S. Patent No. 8,742,325 to Droz
1037	DGC	*Report to Congress: DARPA Prize Authority* (2006)
1038	Team DAD	Hall *et al.*, *Team DAD Technical Paper*, DARPA Grand Challenge (2005)
1039	McManamon	McManamon, *Field Guide to LiDAR*, SPIE Field Guides, Vol. FG36 (2015)

I. INTRODUCTION

1. My name is Dr. James F. Shanley. I have been retained by Fish & Richardson P.C. as an independent expert on behalf of Petitioner Hesai Technology Co., Ltd. ("Hesai"). I understand that Hesai is petitioner in an *inter partes* review ("IPR") of U.S. Patent No. 11,190,750 (the "'750 patent") (EX1001) before the Patent Trial and Appeal Board ("PTAB" or "Board"). I understand the '750 patent is assigned to Patent Owner Ouster, Inc. ("Ouster"). I have been asked to provide my independent analysis of the '750 patent in light of the materials cited below and my knowledge and experience in this field during the relevant period. I have been asked to consider what a person of ordinary skill in the art at the time of the alleged invention of the '750 patent (a "POSITA"; refer to ¶¶72-77) would have understood from the teachings of the '750 patent, including scientific and technical knowledge related to the '750 patent. I have also been asked to consider whether the references relied on by Hesai render obvious claims 44-48 and 50 of the '750 patent.2. I am being compensated at my standard consulting rate for my time providing my independent analysis, plus reasonable out-of-pocket expenses. I have received no additional compensation for my work in this matter, and my compensation does not depend upon the content of my opinions, any testimony that

I may provide, or the ultimate outcome of the matter. All of the opinions set forth in this declaration are my own.

II. BACKGROUND AND QUALIFICATIONS

3. Full descriptions of my educational background, professional work, qualifications, and publications are set forth more fully in my *curriculum vitae*, which is attached to this declaration as Exhibit 1004. Here, I provide a summary of my background and qualifications.

4. I received my bachelor's degree in physics from Clarkson University in 1966. Afterwards, I received my master's degree in physics in 1970 and my doctorate degree in electrical engineering and physics in 1980, both from the University of Massachusetts, Amherst.

5. Over 40 years after I received my doctorate degree, I have accumulated broad in-depth knowledge and experience in the theory, system analysis, design and build of optics, lasers, diode lasers, photodetectors, opto-mechanical, electrical and electronics hardware associated with LiDAR systems operating at infrared to UV wavelengths. I also have substantial experience in atmospheric physics, algorithm development, signal processing and analysis of LiDAR systems. My experience includes designing and building receiver detectors, transceiver optics and associated electronics as well as gas, solid state, and diode laser transmitters. I have also fabricated a range of photodetectors using III-V, II-VI, and silicon materials.

6. I have 12 patents or pending patent applications, and over 45 peer-reviewed publications in the areas of lasers, semiconductor lasers, optical and infrared (IR) imaging systems, laser ranging and imaging systems, light emitting diodes (LEDs), and electro-optic systems.

7. I am involved in a number of professional organizations related to electrical engineering, optical engineering, physics, and electro-optical systems, including American Physical Society, Institute of Electrical and Electronics Engineers (IEEE), Society of Photo-Optical Industrial Engineers (SPIE), Society for Information Display, and American Institute of Aeronautics & Astronautics (AIAA).

8. Because of my research and achievements in the general areas of electrical engineering, optical engineering, and physics, I have received a number of honors and awards. These include the AIAA Sensors Award, Honeywell Technical Achievement Award, and Polaroid Outstanding Engineer C. I was also the editor for two SPIE books on IR Surveillance Technologies, the Chairman of Several SPIE Imaging Conference Sessions, and was an invited lecturer at Hong Kong Science and Technical University.

9. Through my working experiences with various companies over the years, I was also personally involved designing and building a number of LiDAR systems. The first LiDAR system I participated in designing, building, and testing was when I was working at Honeywell Electro-Optics Center during 1976-1985.

The system was a coherent CO2 Laser Radar for the detection and imaging of military platforms. This system could provide Doppler information as well as range and image of the object being illuminated. Further embellishments of the system were for nape of the earth flight, helicopter wire detection and IFF (identification friend or foe). In addition, I fabricated the 4 and 12 element photodiode arrays for these LiDAR's.

10. While working at General Electric's (GE) Space Systems Division during 1985-1989, I was responsible for building and integrating electro-optic sensors and systems on spacecraft for both military and civilian (NASA and NOAA) applications. As part of this responsibility, we built a prototype CO2 Laser Radar for a satellite-based system for measuring global wind velocity. This prototype was packaged and taken to NOAA in Boulder, Colorado to make wind measurement and to verify wind velocity models. The prototype was part of a NASA program called LAWS (Laser Atmospheric Wind Sounder) to set the systems requirements for a future satellite system. We employed several distinct types of algorithms for atmospheric measurements including linear regression, second order regression and several types of proprietary fitting schemes. While at GE, I also led a group developing and fabricating diode lasers for various LiDAR applications. This included fabricating high power diode lasers arrays and multi-mode diode laser

arrays for pumping solid state laser materials such as Nd:YAG, erbium, etc. for use in LiDAR applications being developed on internal GE IRAD.

11. While at GE, I was also involved in development of holographic gratings (diffractive optics) for collimating the output beams of diode laser arrays for higher laser output power, improved single mode emission, and beam steering. The work also included developing external cavity diode lasers using Bragg gratings. These laser sources were being developed for a variety of future LiDAR, earth resources sensing and military applications. Some examples include submarine acoustic detection using blue green laser LiDAR scattering of particulate in seawater and SLCSAT submarine laser communication satellite using high power blue green lasers,

12. While working at McDonnell Douglas during 1989-2005, I participated in developing laser and LiDAR systems, diode pumped solid state lasers and diode lasers for programs that included MOLA (Mars Observer Laser Altimeter), NEAR (Near Earth Asteroid Rendezvous), and Satellite Laser Communication. I worked in a group developing laser diode technology for extremely high-power diode lasers used for weapons, X-Ray lithography and laser fusion.

13. While working at Scram Technologies during 2005-2011, I was involved in building a small handheld infrared LiDAR for target designation, range

and range rate determination. The key features of this LiDAR device were the miniature transceiver optics, high power diode laser and compact electronics.

III. MATERIALS REVIEWED AND CONSIDERED

14. In forming the opinions expressed in this Declaration, I relied upon my education and experience in the relevant field of the art, and have considered the viewpoint of a POSITA (refer to ¶¶72-77) at the time of the alleged invention. I have also reviewed and considered the documents listed in the Exhibit List of this declaration. Although this declaration refers to selected portions of the cited references for the sake of brevity, it should be understood that these are examples, and that a POSITA would have viewed the references cited herein in their entirety and in combination with other references cited herein or cited within the references themselves. The references used in this declaration, therefore, should be viewed as being considered herein in their entireties.

IV. LEGAL UNDERSTANDING

15. I understand that issues such as invalidity and claim construction are analyzed based on certain legal standards. Counsel for Hesai has provided me with an understanding of these standards, and I have applied them in my analysis set forth in this declaration.

A. The Person of Ordinary Skill in the Art

16. I understand that a POSITA is a hypothetical person who is presumed to be aware of all pertinent prior art, thinks along conventional wisdom in the art, and is a person of ordinary creativity—not an automaton.

17. I understand the level of ordinary skill in the art is evaluated based on various factors, including: the level of education and work experience of persons in the field; the type of problems encountered in the field; and the sophistication of the technology at issue. (Refer also to ¶¶72-77, below.)

B. Claim Construction

18. I understand that, as a general rule, the claim terms of a patent are understood to have their ordinary and customary meaning to a POSITA at the time of the invention when read in the context of the patent and its prosecution history. I understand that there are certain exceptions to the general rule, including lexicography and disavowal, but based upon my review of the ’750 patent, I am not aware of any instances those exceptions in connection with this proceeding.

C. Obviousness

19. I understand a patent claim is still invalid if the differences between the claimed subject matter and the prior art are such that the subject matter as a whole would have been obvious to a person of ordinary skill in the pertinent art at the time the invention was made.

20. I understand an obviousness determination includes the consideration of various factors, including the scope and content of the prior art, the differences, if any, between the prior art and the claimed subject matter, the level of ordinary skill in the art, and the existence of objective indicia of obviousness or non-obviousness.

21. I understand an obviousness determination can be based on a single prior art reference or a combination of multiple prior art references and the knowledge of a POSITA. I understand the prior art itself may provide a suggestion, motivation, or reason to combine or modify the teachings of the prior art, or that such a reason may come from other sources, such as the knowledge of a POSITA, common sense, and market forces. However, I understand it is impermissible to rely on hindsight or to use the claimed invention as a roadmap to reach a finding of obviousness.

22. I understand the following rationales may support a finding of obviousness:

- Combining prior art elements according to known methods to yield predictable results;
- Simple substitution of one known element for another to obtain predictable results;
- Use of known technique to improve similar devices (methods, or products) in the same way;

- Applying a known technique to a known device (method or product) ready for improvement to yield predictable results;
- "Obvious to try" – choosing from a finite number of identified, predictable solutions, with a reasonable expectation of success;
- Known work in one field of endeavor may prompt variations of it for use in either the same field or a different one based on design incentives or other market forces if the variations are predictable to one of ordinary skill in the art;
- Some teaching, suggestion, or motivation in the prior art that would have led one of ordinary skill to modify the prior art reference or to combine prior art reference teachings to arrive at the claimed invention.

23. I understand an obviousness finding requires a reasonable expectation of success in achieving the claimed invention. The expectation of success need only be reasonable; a perfect implementation or commercial embodiment of the invention is not required.

24. I understand that objective indicia of obviousness or non-obviousness may include commercial success attributable to the alleged invention; a long-felt but unmet need for the alleged invention; praise of the alleged invention by others in the field; and skepticism towards the alleged invention by experts. I understand that any secondary considerations must bear a nexus to the alleged invention. I understand the nexus requirement is not satisfied if, for example, the purported commercial success is tied to features of a product that were known in the prior art rather than the alleged invention.

V. SUMMARY OF OPINIONS

25. For purposes of this declaration, I have been asked to analyze claims 44-48, and 50 of the ’750 Patent (“the Challenged Claims”) in view of the prior art. In my opinion, the Challenged Claims are obvious based on the following grounds:

Ground 1A: Claims 44, 45, 48, and 50 are obvious based on U.S. Patent No. 10,203,399 (“Retterath”) in combination with U.S. Patent App. Pub. No. 2013/0300838 (“Borowski”).

Ground 1B: Claims 44-48, 50 are obvious based on Retterath, Borowski, and U.S. Patent No. 8,736,818 (“Weimer”)

Ground 1C: Claims 44, 45, 48, and 50 are obvious based on Retterath, Borowski and U.S. Patent No. 7,787,105 (“Hipp”).

Ground 1D: Claims 44-48, and 50 are obvious based on Retterath, Borowski, Weimer, and Hipp.

Ground 2: Claims 44-48 and 50 are obvious based on U.S. Patent App. Pub. No. 2016/0274223 (“Imai”), JP Pub. No. JP 2015-078953 (“Higashi”), and U.S. Patent No. 9,911,774 (“Grzesik”).

Ground 3: Claims 44-48, and 50 are is obvious based on Weimer, Borowski, and Hipp.

26. I provide the bases for my opinions in the following sections.

VI. TECHNOLOGY BACKGROUND

27. In this section, I provide an overview of technical concepts and design principles underlying LiDAR technology and the ’750 Patent.

A. Overview of LiDAR and Time-of-Flight

28. The ’750 Patent and the prior art discussed in this declaration all generally relate to systems that use LiDAR (which stands for “Light Detection and Ranging”) to measure distance to objects.

29. The concept of using LiDAR to probe distant objects had its humble origins in 1930, when Irish physicist E. H. Synge proposed using light to probe the earth’s atmosphere and to measure cloud distance. Synge’s rudimentary apparatus used a searchlight as the multi-spectral high-power light source to measure atmospheric particulate scattering and to determine distance to clouds. Through appropriate spectral filtering, he was able to isolate individual light wavelengths to investigate light scattering from atmospheric molecules and particulate. Synge determined that he could measure the distance to clouds using the same light reflection techniques.

30. After Synge’s discovery, various types of light sources with appropriate spectral filters were employed to isolate specific wavelengths for light scattering measurements. However, the technology was not sufficiently advanced for these systems to be useful in practical applications. It wasn’t until a single coherent

monochromatic light source was developed that LiDAR became practical—in other words, the laser was the critical missing piece.

31. The advent of the laser in early 1960 at Hughes Aircraft was followed shortly by the development of the first true coherent light detecting and ranging system, originally named "COLIDAR," and later shortened to just "LIDAR." This first system was used for tracking satellites and other celestial bodies. Today, several different types of lasers are known and commercially available, operating at various power levels. These include gas, solid state and semiconductor lasers, operating at wavelengths ranging from deep Ultraviolet (UV), Visible, Infrared (IR), to Submillimeter.

32. The terms "LiDAR" and "LaDAR" are both used to refer to light-based distance measurement and object probing systems. "LiDAR" stands for "light detection and ranging," whereas "LaDAR" stands for and laser detection and ranging (Ladar) systems. Presently, the terms LiDAR and LaDAR are frequently used interchangeably. Conventionally, however, LiDAR typically referred to systems requiring lower power, shorter range, and optionally using light-emitting diodes (LEDs) as the light source. LaDAR, on the other hand, typically referred to applications using higher power lasers for longer ranges and for geospatial, space, planetary, and other imaging applications requiring long range and high resolution.

33. The number and types of LiDAR applications has increased substantially since its early uses in the 1960s, due at least in part to the availability and variety of lasers, LED light sources, and photodetector receivers. Consequently, many compact high-sensitivity systems are commercially and publicly available, featuring a variety of lasers and detectors operating at different wavelengths and power levels. There are now literally hundreds of uses for the technology. Representative examples include the following:

- Helicopter, airplane and missile fire avoidance and terrain following;
- Planetary and asteroid topographical mapping and distance measurement;
- Earth resource sensing and pollution detection;
- Satellite wind velocity measurements for improved weather forecasting;
- Commercial airplane pilot replacement for altitude and air speed measurement;
- Laser altimetry; and
- Autonomous vehicles and robotics.

34. As one example of the evolution of LiDAR, in 2005, a company called Velodyne Acoustics developed a LiDAR device for autonomous-vehicle navigation. EX1038, 1-2. Velodyne developed its LiDAR device as part of the 2005 DARPA Grand Challenge, a government-sponsored event intended to encourage the development of autonomous-vehicle technology. EX1037. The Velodyne team,

which called itself Team DAD, designed the system to use 64 pairs of transmitters and detectors, mounted on a rotating platform powered by a built-in motor. EX1038, 8-9. The rotating platform enabled the device to have a 360-degree field-of-view horizontally, and the spacing of the transmitters and detector supported a 20-degree field-of-view vertically. *Id*. This allowed the device to generate a "very high-density profile map of the surrounding environment." *Id*. On-board software then used this information to make autonomously navigation the terrain.

35. Velodyne's first commercial LiDAR device, based on the design described above, was called the HDL-64E, images of which are shown below:

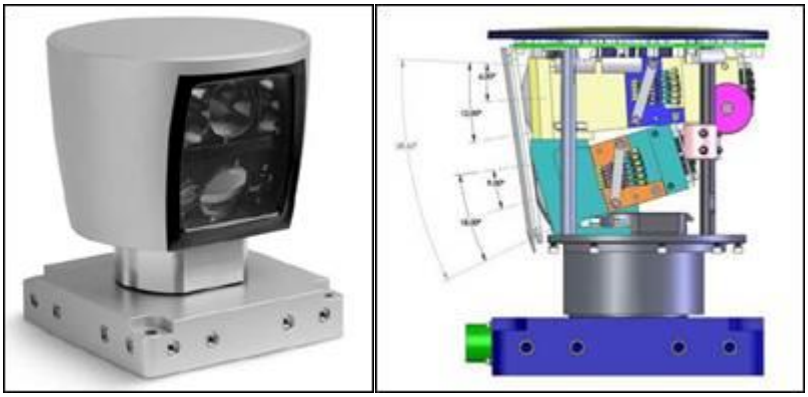

Velodyne continues to make LiDAR devices today, incorporating more recent improvements in LiDAR technology. For example, in 2016, Velodyne released its "Puck" design LiDAR sensor, the VLP-16, an image of which is shown below. Versions of the VLP-16 are still sold by Velodyne today. The Hall reference (U.S. Patent No. 9,983,297) that I discuss in my opinions on obviousness below is a

Velodyne patent that appears to describe the technology used in the VLP-16 (or a related design).

36. Many other companies have emerged in the market for LiDAR for autonomous vehicles, employing a range of different technologies to develop better LiDAR devices that can detect objects at longer ranges and under more difficult lighting or weather conditions, and that are more accurate and less sensitive to stray light and other noise.

37. As one example, Waymo, the self-driving car company, develops its own LiDAR detection modules. For example, the Droz reference (U.S. Patent No. 10,605,984) that I discuss in my opinions on obviousness below is a Waymo patent that describes various detector-side techniques that Waymo had incorporated into its LiDAR system to minimize erroneous readings, such as optical filters to block stray light and waveguides to minimize cross-talk.

B. LiDAR Basics

38. The basic components of a conventional LiDAR system are shown in the figure below:

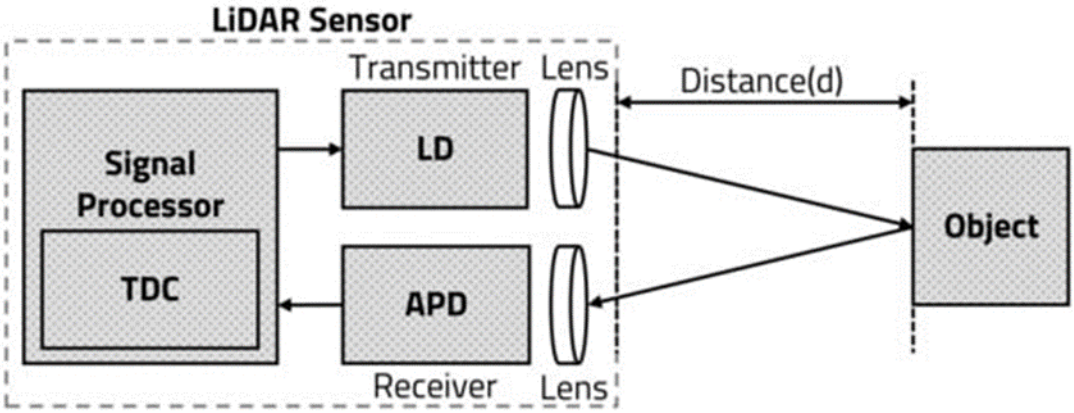

EX1014, FIG. 2. The basic components include the following:

- The transmitter (a light source): usually a laser, and depending on the power required may be either a semiconductor or a solid-state laser. LEDs may be used for lower power and lower resolution applications.
- Transmitter optics: optical components (such as a lens) to collimate the output beam and direct it to the interrogated object.
- Receiver optics: optical components that capture the reflected signal light and have the appropriate filters and baffles to reject or absorb stray light or any other non-signal light.
- The receiver: detects the signal light. In conventional systems the receiver is typically one of the following types of photodetectors: photoconductors,

photodiodes, avalanche photodiodes (APDs), or single- photon avalanche photodiodes (SPADs). A single photodetector or arrays of photodetectors may be used depending on system requirements.

- An electronics module: includes circuitry and other electronics for controlling the lasers and synchronizing the pulsed laser with the received return signal. The time-to-digital-converters (TDC) (used to measure the time of flight, discussed below) and signal processing electronics are typically also contained in this module.

39. The operating principles of the basic lidar system are illustrated in the figure below.

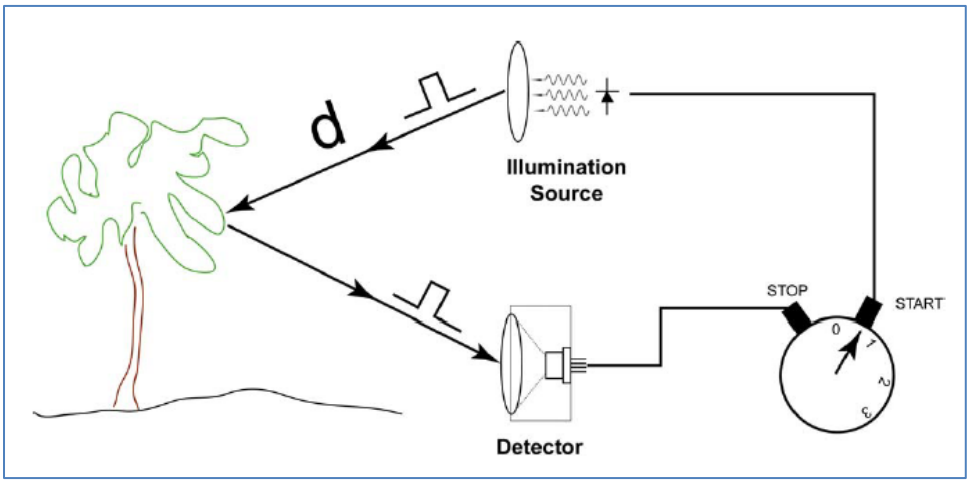

EX1035, 2.3. The illumination source (*e.g.*, a laser) emits narrow light pulses, and the echoes that are reflected from the target are detected to measure distance. The

distance is determined based on the time elapsed between the emission and the detection. Specifically, the distance is the time difference multiplied by the speed of light, divided by two, or: $x = c\Delta t / 2$. For example, if the time between emission and detection is one microsecond, then the distance measured is $(1 \times 10^{-6}\ s)/2 \times 2.99 \times 10^{8}\ m/s = 149.5$ meters. This measurement technique is referred to as "time-of-flight" or "TOF."

40. When multiple distance measurements are processed for the different points in the environment, the resulting information can be combined to generate a three-dimensional map of the environment, also referred to as a "point cloud," an example of which is shown below:

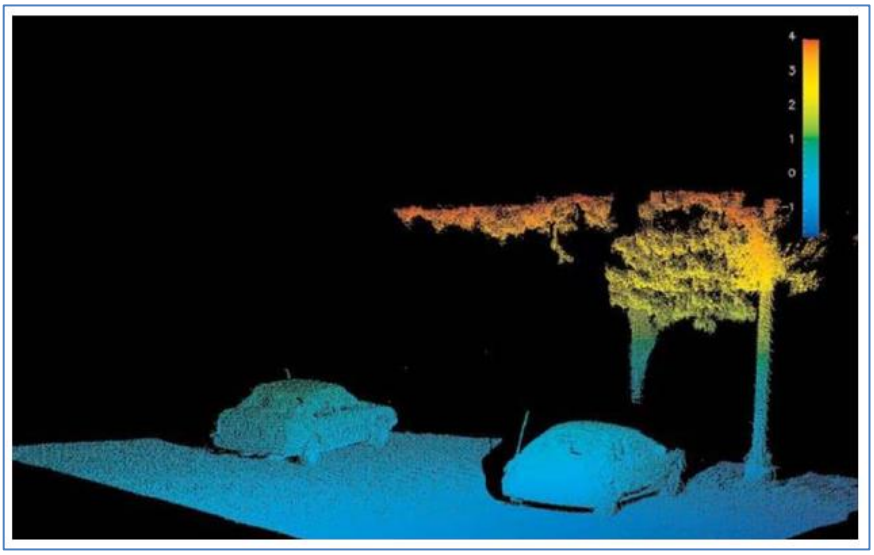

Id., at FIG. 6.3.

C. LiDAR System Design and Elements

1. Single-Beam and Multi-Beam Systems

41. As I discussed above, early LiDAR devices were focused first on detecting satellites and celestial bodies, and shortly thereafter, on military applications, for example, for determining the distance to a target. These systems were much simpler than modern LiDAR systems, and typically did not need to generate a map of an entire 3-D environment—they only needed to measure the distance to a point, or the distance of objects in a two-dimensional plane. EX1024, 1:32-39. These tasks could be accomplished using a single laser that scans a target or field.

42. As the technology progressed, however, researchers and engineers in the field realized that a more detailed map of the environment could be achieved by using multiple transmitters, emitting multiple beams of light, each paired with a corresponding detector. The transmitter/detector pairs could then be moved or rotated to scan a large area.

43. For example, U.S. Patent No. 6,747,747 ("Hipp-747"), a 2002 patent, summarized the then-known devices using light "for determining a distance profile," and noted that the "disadvantages of the apparatuses described consist of the fact that in each case only a limited region can be monitored." EX1018, 1:7-13, 1:33-41. Hipp-747 explained that conventional LiDAR devices can be improved through "the

simultaneous transmission of a plurality of light signal in the direction of a plurality of reflection/remission points disposed, spaced apart from one another," along with a "light receiver [that] includes a plurality of photodiodes for the reception of light signals reflected/remitted by the reflection/remission points." *Id.*, 1:52-58. Hipp-747 explained that "Due to the simultaneous transmission of a plurality of light rays in different directions, a larger region, namely the region covered by the totality of the simultaneously emitted light rays, can be monitored [rather] than with the transmission of an individual light ray which only allows the monitoring of a line extending along this one light ray." *Id.*, 1:66-2:16. In Hipp-747's exemplary embodiment, the transmitters and detectors were arranged in a fan shape, as shown in Figures 1 and 3:

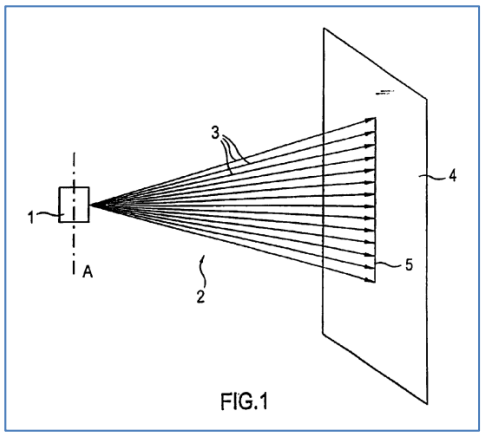

FIG.1

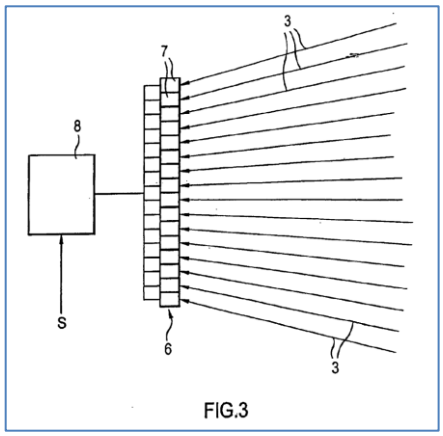

FIG.3

Id., Figs. 1, 3. Hipp-747 further explained that one could use a well-known "light deflection unit to deflect a fan-shaped light bundle," which "makes it possible in

comparison with scanners known from the prior art to monitor not only a plane, but also a space." *Id.*, 2:62-3:4.

2. Array Configurations

44. Some systems, such as the system described by "Hall", positioned the emitters and detectors in two-dimensional *arrays*. EX1024, FIGS. 13, 22. Organizing the emitters and detectors in multi-column arrays, as compared to a single column, for example, facilitated a more compact device. The height and overall size could be reduced. Moreover, such two-dimensional arrays facilitated wider field-of-view at a particular rotational position.

45. I note that many other devices incorporated these design principles. Retterath, which I discuss in more detail below, describes an array configuration. In particular, Retterath describes matching the emission region of each detector with the field-of-view for a corresponding emitter. EX1005, FIGS. 4, 8; 9:53-10:31; 10:40-50. The Droz reference describes a system in which emitter and detector arrays are on printed circuit boards. EX1036, FIG. 2, 3:59-4:5. They are positioned in a rotating housing to obtain a rotational field of view. *Id.*

3. Alignment

46. The time-of-fight calculation could be facilitated by pairing each emitter with a corresponding detector. Because the time-of-flight calculation is based on the round trip time for a photon to leave the emitter and reach the detector,

receipt of the photon by the corresponding detector promotes an accurate calculation. In other words, if a detector generators a signal based on phtons from another source than the corresponding emitter (e.g., stray photons), the time-of-flight calculation may not be accurate.

47. Weimer (U.S. Patent No. 8,736,818), as I discuss in more detail below, described a known technique to promote proper pairing and prevent stray photons from impacting the time-of-flight determination. In particular, each emitter-detector pair was aligned to have a coincident field of view and angularly spaced from other pairs. EX1008, 3:1-12, FIG.3A. "Large fields of view per detector are not desirable because a wide field of view results in the acceptance of more background light than a narrower field of view, reducing the signal to noise ratio." *Id*., 1:53-56. "[T]he goal for good daytime performance has been to have the laser spot size only slightly smaller than the receivers instantaneous field of view." *Id*., 1:56-59. In particular, Weimer described the known technique of controlling the spot size of each emitter in order that "individual beams [] can be directed to cover an area corresponding to a single pixel of the detector." *Id*., 4:56. Such emitter/detector pairs were known and utilized in other LiDAR systems. *See, e.g.*, EX1005, FIGS.4, 8, 3:5-9; 7:41-8:40, 9:58-10:31; EX1009, [0072]; [0060-65], [0067], [0036], [0047], FIGS. 10, 11.

4. Emitters

48. Conventional LiDAR devices employed laser diodes to emit electromagnetic radiation. EX1039, 67. Various types of lasers were known. A type of laser referred to as vertical-cavity surface-emitting laser ("VCSEL") were known to be particularly beneficial in LiDAR applications. VCSEL emitters were designed to emit photons from a cavity formed in the upper surface of semiconductor layers were capable of producing a tighter beam divergence than other types of emitters, such as edge-emitting lasers. As a result, VCSELs could produce a more precise illumination spot. Moreover, VCSELs facilitated emission in a direction perpendicular to a PCB where they were mounted, facilitated high-speed activation, reduced energy consumption, and manufacturing benefits, among others. *See, e.g.*, EX1017, 4:51-5:21; EX1024, 4:55-62.

5. Receiver Detectors

49. As stated above, there are many types of light detectors available. These include photoconductors, photodiodes, avalanche photodiodes (APDs) and single-photon avalanche photodiodes (SPADs). LiDAR devices, and particularly compact, mobile LiDAR devices, such as those used in autonomous vehicles, require highly sensitive receivers capable of low noise and high signal-to-noise ratios. Under these design constraints, APDs and SPADs represent the two best options, and have been known and used in LiDAR systems well before May 2017. SPADs,

in particular, are considered to be optimal in many applications because they can attain a high gain which enables them to detect a single photon.

50. Early LiDAR devices, such as LiDAR-based rangefinders, employed avalanche photodiodes ("APDs"). The basic operation of an APD uses the "avalanche" effect to create a larger gain. When photons enter the APD, they excite electrons within the semiconductor, which are accelerated by a reverse bias voltage to free other electrons. The process accelerates through further electron collisions, and generates a current. As more photons are received at the diode, a more current flows, which makes for a more perceptible and detectable electrical signal. If the diode receives too much reverse bias, however, it can break down and generate such a large current that the device may fail. Thus, in traditional APDs (also sometimes referred to as "linear-mode" APDs), the diode is reverse biased toward that breakdown voltage, but not beyond it. When operating below the breakdown voltage, there is a linear relationship between the number of photons detected and the current generated.

51. SPADs are related to APDs in operation, and have a similar current-voltage characteristic. Indeed, SPADs are sometimes even referred to as "Geiger-mode" APDs. But unlike APDs, which operate at a reverse bias below the breakdown voltage, SPADs are designed to operate ***above*** the breakdown voltage, by applying a high reverse-bias and designing the photodiode structure so that it can

operate without damage even at very high gains. As a result, when even a single photon is received, a SPAD triggers a very strong avalanche effect and outputs a relatively large current. EX1023, 8 ("SPADs, also known as Geiger-mode avalanche photodiodes, are reverse biased at their characteristic breakdown voltage, thus providing single-photon detection capability."); EX1019, 4; EX1028, [0012]-[0014], [0020]-[0021]; EX1012, [0003], [0005], [0029]. SPADs thus generate a signal that is the equivalent of a binary state representing photon detection: either no photon is detected, and no current is generated, or a photon is detected, and a large current is generated. Using SPADs in a LiDAR system allows the system to detect objects even at large ranges or under poor conditions, when the intensity of the reflected light may be weak.

52. The image below helps illustrate the different operating regions and gains associated with APDs and SPADs[1]:

[1] This image is reproduced from https://4sense.medium.com/apple-lidar-demystified-spad-vcsel-and-fusion-aa9c3519d4cb. The article is describing the LiDAR technology used in certain specific mobile devices, but the figure accurately describes the operation of APDs and SPADs more generally.

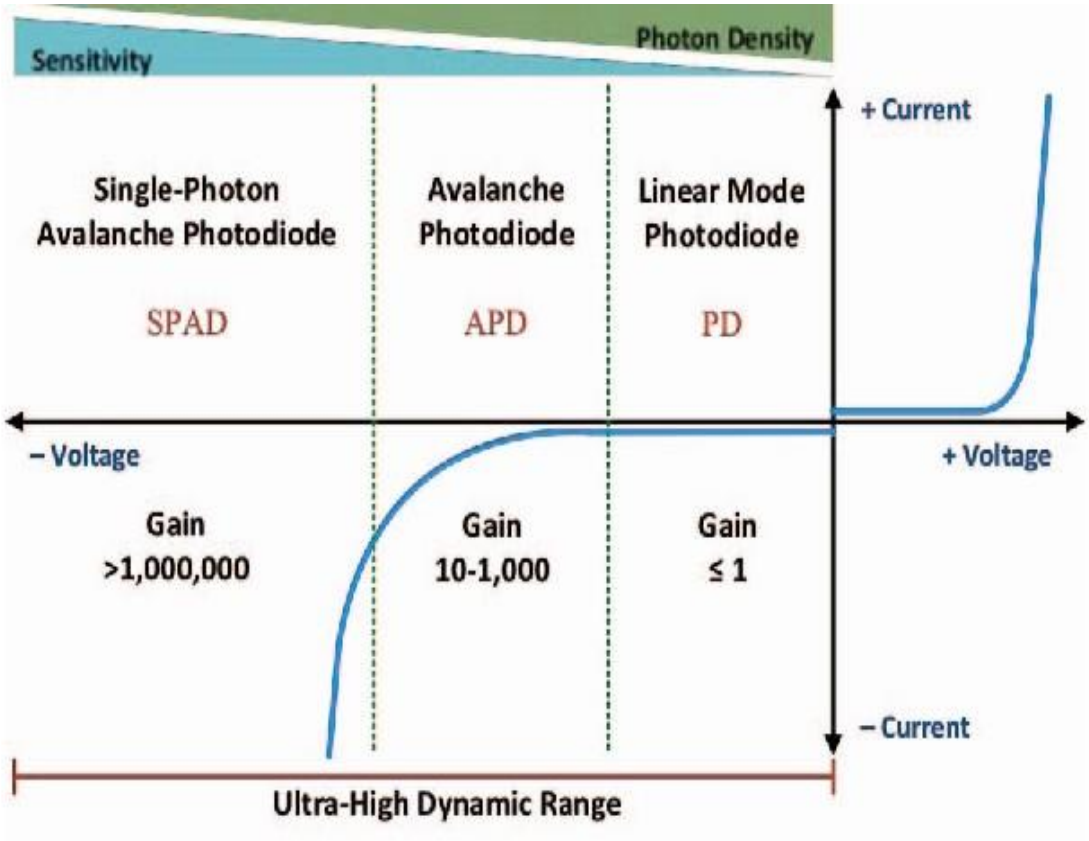

Because APDs and SPADs use a reverse-bias voltage, the voltage of interest is negative. Hence, the figure above begins close to the zero voltage range (at the y-axis) and shows the current generated with respect to photon density as the voltage becomes more negative (*i.e.*, as the reverse-bias increases). In the APD operating range, the gain increases with the reverse-bias up to the breakdown voltage (the vertical dotted green line). Beyond the breakdown voltage, the gain increases dramatically, even for a very low photon density (*i.e.*, a single photon).

53. One additional important aspect of SPADs is the need for a quenching circuit. In a linear-mode APD, the breakdown voltage is never reached, and so the output current remains linear relative to the number of detected photons. In SPADs,

however, even a single photon causes such a large avalanche effect, and generates such a high current, that additional photons no longer have an effect on the output. In order to detect additional photons, a special circuit, called a "quenching circuit," is used to reduce the voltage below breakdown. The time it takes to "quench" the SPAD may be referred to as the recovery period or recovery time, and is the time it takes to reset the SPAD so that it can detect another photon.

54. Because SPADs are effectively inoperable to detect photons during their recovery period, in real-time detection applications, the use of a single SPAD can be problematic, as incoming photons will not be detected during the recovery period. Thus, in practical applications, multiple SPADs, in a one- or two-dimensional array, may be used to detect photons corresponding to a single point in space or a single transmitter on the transmit side. By using a plurality of SPADs to detect photons corresponding to a particular point of interest or field of view, the array of SPADs can collectively detect and process multiple photons, even if any one particular SPAD is in a recovery period at a given point in time. EX1006, [0022], [0053], [0078]; EX1011, [0071]-[0072], [0075]; EX1028, [0049]-[0050], [0138]-[0139]. Forming each detector to include multiple SPADs was known to promote detection of photons even if one or some of the SPADs where in the process of quenching and reset. *Id.*; *see also* EX1006, FIGS.6, 11, 12a, 12b, 18-19, [0223-

24, 27-28], [0021], [0034], [0042], [0062], [0127], [0192], [0197-98], [0241-42]; EX1028, [0049]-[0050], [0138]-[0139]; EX1011, [0071].

6. Noise and Interference

55. Because LiDAR systems are designed to detect information about objects and environments outside of the system, there is a high potential for noise and interference to affect the system—specifically, in the form of light that gives rise to erroneous measurements. Noise and interference can affect the sensitivity of the system—for example, the ability of the LiDAR device to accurately detect objects at longer ranges, or in poor weather conditions. They may be particularly problematic in systems that employ SPADs, because even a single errant photon may cause a false positive detection, while also rendering the SPAD inoperable until it is quenched. Two particularly well-known noise conditions affecting LiDAR systems are stray light and cross-talk.

56. Stray light is defined as any light that is unwanted and interferes with the performance of an optical system's intended function. Stray light can originate from the object the optical system is capturing or from unintended external or internal emitters. Examples of stray light include:

- Light reflections off mechanical mounting surfaces inside the optical system
- Light leaking through a gap in the system enclosure

- Light scattering off dust and other imperfections on the system's optical surfaces

- Man-made and natural light sources, such as municipal lights, the sun, or the moon.

57. Stray light can usually be described as one of two types: (1) ghosts or and (2) glare. Ghosts arise in imaging systems when light from an object in the image field undergoes several unwanted reflections and then falls on the imaging device, creating an unwanted "ghost" image of the object. Flare, or veiling glare, occurs when light scatters inside the optical system either off imperfections in the optical surfaces, or off mechanical elements in the system. Atmospheric reflection of light such as haze or sky glow can also cause glare.

58. Unwanted stray light can reduce the contrast of images and reduce the sensitivity of detection systems. There are a number of well-known ways to reduce the impact of stray light, including the following:

- Black paint: using black anodized surfaces or absorptive black paint on all optical mounting surfaces.

- Optical filters: filters that only allow light at certain wavelengths (*e.g.*, signal light from the transmitter) to pass through the system. Depending on system requirements, these can pass either a narrow- or wide-band width.

- Reduced apertures: limits the amount of light reaching the detector from surrounding reflections.

- Baffles: obstacles placed in the optical path that prevent light from propagating where it is not wanted.

- Absorptive filters: placed in front of the detectors to absorb unwanted stray light and can help to reduce the effects of scattered light, which can cause veiling glare.

59. In many LiDAR systems, combinations of these techniques may be used to prevent stray light from reaching a detector.

60. Cross-talk is a type of interference that occurs when a signal from one communication channel is inadvertently transferred to a different communication channel. In the context of LiDAR systems, cross-talk typically manifests as optical cross-talk—*e.g.*, light intended for one detector may inadvertently also be detected at an adjacent detector. The problem of optical cross-talk between adjacent detectors in a SPAD array, in particular, may impose a substantial limit on the density of arrays. Because cross-talk increases as the distance between adjacent detectors is reduced, tightly packed arrays will be more prone to cross-talk, and thus less accurate.

61. Other than reducing the density of the SPAD array—which has the disadvantage of either increasing the size of the device, or reducing the number of SPADs (and thus the sensitivity/accuracy)—several techniques are known and employed to minimize optical cross-talk. These techniques are typically designed to reduce the likelihood that a photon from one channel or one SPAD will be detected at an adjacent channel or SPAD. For example, to prevent incoming light at one detector channel from bleeding into an adjacent channel, apertures may be provided

on the surface of the device or the surface of the SPAD array, reducing the field of view of individual detectors so that light from adjacent channels is less likely to be received.

62. In my opinion, the challenged claims of the ’750 Patent represent obvious combinations of the features and technologies described above.

VII. THE ‘750 PATENT

63. In this section, I provide an overview of ’750 Patent, a summary of the prosecution history, and a listing of the challenged claims.

A. Overview

64. The ‘750 Patent is titled “*Opitcal Imaging System with a Plurality of Sense Channels*.” EX1001. The underlying application was filed on May 18, 2021, and is related to Provisional App. No. 62/232,222, filed on September 24, 2015. *Id.*

65. For purposes of my analysis, I have been informed that the priority date of the ’750 patent is no earlier than the filing date of its provisional application—September 24, 2015. I have been informed that references in the proposed grounds (below) qualify as prior art under 35 U.S.C. § 102(a) because each of those references was filed and/or published before that date. I understand that claims of the ’750 Patent may not be entitled to the effective filing date of September 24, 2015, and Hesai may challenge the priority date of the claims in other proceedings.

B. Specification

66. The ’750 Patent is directed to a system for collecting distance information. EX1001, 1:22-35. Figure 2 illustrates an embodiment of the system 100, which includes a transmit section (blue) and receive section (red):

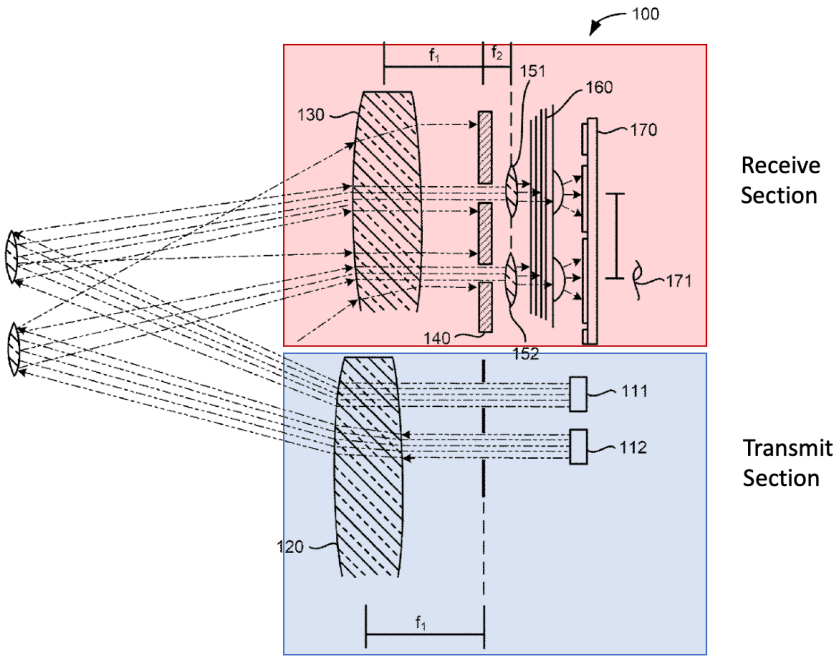

Id., FIG. 2 (annotated).

67. The transmit section includes a plurality of illumination sources 110, 111, 112, which may include any “suitable type of optical transmitter” such as laser diodes or light-emitting diodes. *Id*., 1:64-2:4, 12:19-23. The illumination sources are positioned behind a bulk transmitting optic 120, such that beams emitted from the sources pass through the optic to the surrounding field. *Id*., 5:25-35.

68. After photons from the beams reflect off of objects in the field, they return to the receive section through a bulk imaging optic 130. *Id.*, 2:3-12 , 3:51-62. The photons pass through an aperture layer 140, which includes a plurality of apertures separated by a stop region. *Id.*, 2:2-12. The specification explains that "each aperture in the set of apertures 144 defines a field of view in the field coincident a discrete spot output by a corresponding illumination source in the set of illumination sources 110," while "the stop region 146 absorbs and/or reflects light rays reflected from surfaces in the field outside of fields of view defined by the set of apertures 144 and passing through the bulk imaging optic 130." *Id.*, 2:3-12.

69. Behind the aperture layer 140 are a plurality of lenses 150, an optical filter 160, and a plurality of pixels 170. *Id.*, 2:14-21. Each lens 150 collimates light passing through a corresponding aperture. *Id.*, 7:21-25. The optical filter passes light having a specific wavelength band, while blocking wavelengths outside of that band. *Id.*, 7:49-62. And each pixel 170 detects photons passed through its corresponding aperture 144 and lens 150. *Id.*, 8:49-9:6. The specification states that each pixel may be formed as an array of single-photon avanalanche diodes (SPADs) or any other type of photodetector, such APDs, photomultipliers, or quantum dot detectors. *Id.*, 9:1-7, 10:40-54.

C. Prosecution History

70. The application underlying the ’750 Patent was filed on July 26, 2018, and most of the initial claims were allowed in the first office action without any §102/§103 rejections based upon prior art publications. EX1002, 1091-1100. A few claims were rejected in the first office action based on a non-statutory double-patenting ground. EX1002, 1094-1096. In response, the applicant submitted a terminal disclaimer and furthermore added ten new claims (which included the issued claims 44-48 and 50 challenged here). EX1002, 1334-1347. Several months later, all claims were allowed; none of the newly added claims were subject to a rejection based upon a prior art publication. EX1002, 1701-1709. The examiner’s “reasons for allowance” for independent claim 44 merely quoted the claim language without identifying publications that were deemed pertinent or overcome. EX1002, 1707-1708.

D. Claims

71. I understand that Hesai challenges claims 44-48 and 50 of the ‘750 Patent, which I reproduce below:

Claim 44	
44(a)	An optical imaging system comprising:
44(b)	a bulk imaging optic;

44(c)	a plurality of pixels arranged behind the bulk imaging optic, wherein each pixel in the plurality of pixels comprises a plurality of single photon avalanche diodes (SPADs) and has a field of view that is non-overlapping beyond a threshold distance in a field external to the optical imaging system with fields of view of all other pixels in the plurality of pixels, and wherein the plurality of pixels includes at least a first pixel and a second pixel;
44(d)	an aperture layer disposed between the bulk imaging optic and the plurality of pixels, the aperture layer comprising a plurality of apertures separated from each other by a stop region, the plurality of apertures including a first aperture disposed in a first optical path extending between the bulk imaging optic and the first pixel and a second aperture disposed in a second optical path extending between the bulk imaging optic and the second pixel;
44(e)	a bulk transmitting optic disposed adjacent to the bulk imaging optic; and
44(f)	a plurality of emitters arranged to project electromagnetic radiation through the bulk transmitting optic and into the field according to an illumination pattern where electromagnetic radiation output from each emitter in the illumination pattern is coincident with a field of view of a corresponding pixel in the plurality of pixels.
Claim 45	
45	The optical imaging system of claim 44 wherein the plurality of pixels further includes third and fourth pixels, and the plurality of apertures further includes a third aperture disposed in a third optical path extending between the bulk imaging optic and the third pixel and a fourth aperture disposed in a fourth optical path extending between the bulk imaging optic and the fourth pixel.
Claim 46	
46	The optical imaging system of claim 44 wherein the plurality of emitters comprises a plurality of vertical-cavity surface-emitting lasers (VCSELs).
Claim 47	
47	The optical imaging system of claim 46 wherein each emitter in the plurality of emitters comprises a single VCSEL.

Claim 48	
48	The optical imaging system of claim 44 wherein each pixel in the plurality of pixels is operable to output a signal corresponding to a count of photons incident on the pixel within one sample period.
Claim 50	
50	The optical imaging system of claim 44 wherein the optical imaging system is configured to collect distance data based on recorded times between transmission of beams of electromagnetic radiation emitted from the plurality of emitters and detection of photons originating from the beams of electromagnetic radiation.

VIII. LEVEL OF ORDINARY SKILL IN THE ART

72. In my opinion, based upon my knowledge and experience in this area, a POSITA as of September 24, 2015 would have had an undergraduate degree in mechanical or electrical engineering or physics and two to three years of experience in the field of LiDAR design. Less work experience may be compensated by a higher level of education or vice versa. The following factors support my opinion. My analysis is thus based on the perspective of a POSITA having this level of knowledge and skill at the relevant time of the invention. For purposes of my analysis, I have been informed that the priority date of the ’750 patent is no earlier than September 24, 2015, and I have applied this timeframe as being the relevant time for the perspective of a POSITA.

73. First, the typical level of education for persons working in the field would include an undergraduate degree in mechanical or electrical engineering or physics. Time-of-flight sensors like LiDAR are a combination of optical,

mechanical, and electrical design elements. For example, I would expect a typical engineer who works for an automotive LiDAR company to have an undergraduate degree in one of these fields. Certain engineers will have more advanced degrees, such as a masters or Ph.D. in a more-specialized area of optics or optoelectronics, but an undergraduate degree in mechanical or electrical engineering or physics would be the typical background and would provide engineers in the field with a baseline knowledge of the optical, electrical, and mechanical design principles underlying time-of-flight devices. I also note that while there is not typically an undergraduate degree specific to the field of optics, a student on track for a degree in mechanical or electrical engineering or physics would have sufficient exposure to optics principles to then work in that area.

74. Second, 2-3 years of experience in the field would be typical for a person deemed to have ordinary skill in the technology underlying the ’750 Patent. This level of experience would provide an engineer with more specialized focus in optics, device structure, the use of different emitters and detectors, and processing circuitry to generate point-cloud data. He or she would have been familiar with the design principles and tradeoffs underlying the subject matter of the ’750 Patent.

75. Third, the types of problems typically encountered in the field relate to improving detection speed, accuracy, range, and resolution. An engineer with a mechanical or electrical or physics background and 2-3 years of work experience

with time-of-flight devices like LiDAR would have been familiar with these problems and working on solutions to address them. For example, a typical engineer at that level would be tasked with evaluating different emitters—*e.g.*, EELs, LEDs, and VCSELs—and detectors—*e.g.*, APDs and SPADs—to decide whether they improve accuracy and detection capability and are cost-effective. He or she would also be tasked with evaluating different optics elements such as lenses, absorption layers, and filters for the same reasons.

76. Fourth, the proposed level of skill is consistent with the sophistication of the technology claimed in the ’750 Patent. The patent concerns LiDAR design, including the use of certain emitter and detector types, and optical features like the arrangement of emitter-detector pairs.

77. For these reasons, it is my opinion that the appropriate level of skill in the art is an undergraduate degree in mechanical or electrical engineering or physics and 2-3 years of experience in time-of-flight sensor design, such as LiDAR.

IX. CLAIM CONSTRUCTION

78. For purposes of this proceeding, I have applied the ordinary and customary meaning of the claim terms as they would have been understood to a POSITA at the time of the alleged invention of the ’750 Patent, and I have considered that meaning in the context of the patent and its prosecution history. Based upon my review of the ’750 Patent and my knowledge and experience in this field, the claim

language does not include specialized terms that require further explanation or elaborative definitions. The ordinary and customary meaning would have recognized and understood by a POSITA.

79. I understand that in the parallel ITC proceeding, Hesai and Ouster have submitted preliminary constructions for certain terms of the ’750 Patent before that proceeding was terminated. EX1026. For the reasons detailed in the element-by-element analysis below, each of the prior art combinations that I analyzed herein would have achieved a predictable result that is similar to the embodiment described in the ’750 patent. Accordingly, based upon my review of the ’750 Patent and the prior art combinations analyzed below, the Challenged Claims are rendered obvious regardless of whether any of those preliminary constructions from the now-terminated ITC proceed were imposed in this proceeding. When the prior art combinations are rightfully understood, those preliminary constructions would not change the result in this proceeding.

X. OVERVIEW OF THE PRIOR ART

80. In this section, I provide an overview of the prior art references that I have relied on to inform my opinions.

A. U.S. Patent No. 10,203,399 (“Retterath”)

81. Retterath is titled “*Methods And Apparatus For Array Based LiDAR Systems With Reduced Interference*.” EX1005. It was filed on November 12, 2013.

82. Retterath describes a multi-beam LiDAR system, including features that reduce cross-talk interference between adjacent emitter-detector pairs. *Id.*, Abstract. As shown in Figure 4, the LiDAR system includes an array of emitters 100, each of which emits a beam 110:

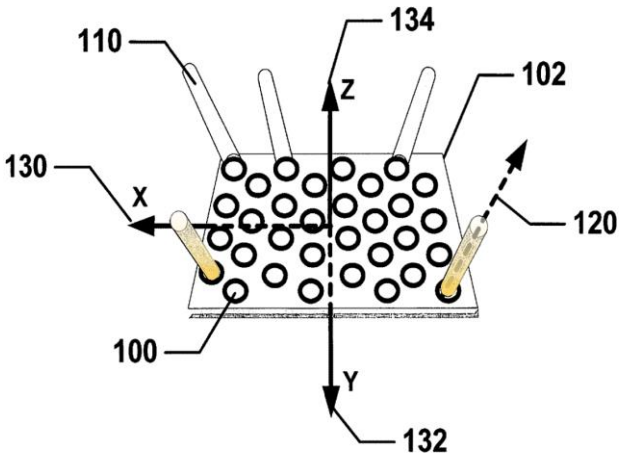

Id., FIG. 4 (annotated).

83. Each beam is emitted along a unique vector 120 that is angularly spaced from the other vectors in the array. *Id.*, 7:41-8:14. The pattern and vector of each beam is defined by a collimating lens 66 and directional lens 70 as shown in Figure 5A:

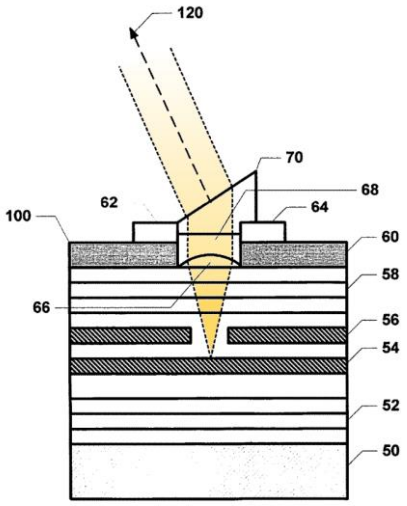

Id., FIG. 5A, 8:20-40.

The collimating lens 66 gather lights from the "active layer 54" and focus the lights into a beam.

84. The system includes a transmit macro lens 80 positioned such that emitter beams pass through the transmit macro lens 80 to the surrounding environment, where they reflect off objects in the field and return to the device through a receive macro lens 230. *Id*. Figures 6 and 10 illustrate the transmit and receive sections of the device:

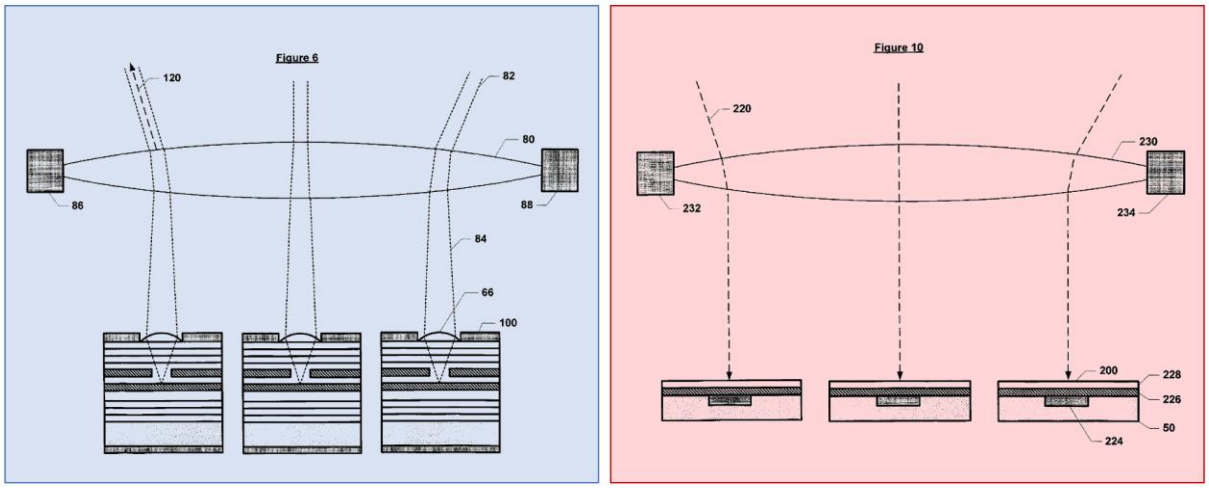

Transmit Section Receive Section

Id., FIGS. 6, 10 (annotated).

85. After the beams pass through the bulk receiving optic 230, they are reflected off of objects in the field and then detected by an array of detector elements 200, as shown in Figure 8:

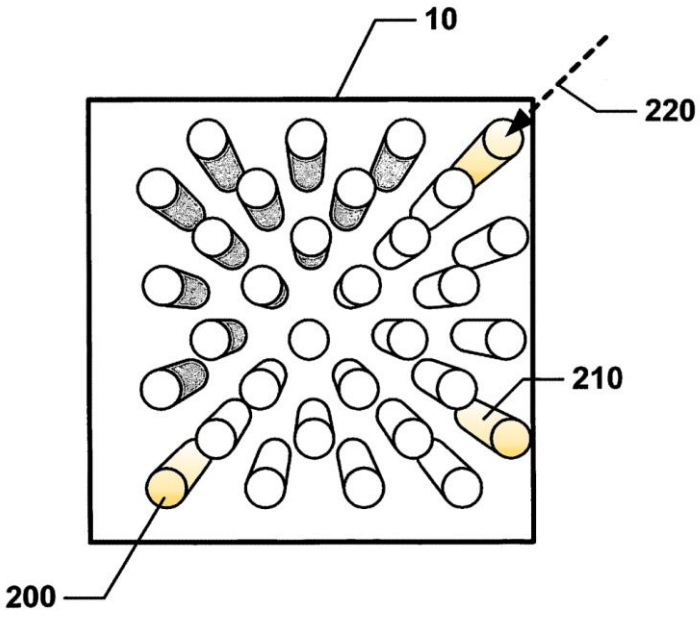

Id., FIG. 8 (annotated); 9:53-10:31.

86. Each detector 200 defines a field of view that receives light beams 210 along a unique vector 220. *Id.*, 9:56-59 ("Each detector of detector elements 200 has an optimal receive detector vector (coincident axis) 220 along which the maximum optical energy will be transferred.").

87. A principal teaching of Retterath is that each emission vector 120 is "on-coincident axis" with a corresponding detection vector 220. *Id.*, 6:23-28 ("For each emitter/detector set of elements 100/200, the emitter and detector vectors are coincident and form a common on-coincident axis that is at an angle relative to a vector normal to the plane of the array that is unique for that emitter/detector set."); *Id.*, 6:29-39. The design ensures that the majority of photons received at a given detector are emitted from its corresponding emitter, thus reducing interference. *Id.*, 3:5-9 ("The combination of an array of emitter/detector sets coupled with the on-coincident axis approach for each of the emitter/detector sets provides for reduced interference among emitters within a given LiDAR unit and also among different LiDAR units."); 9:62-65 ("Inbound optical energy that is more than slightly-non-parallel to the receive detector vector (coincident axis) 220 will be substantially blocked by the detector waveguide or directed elsewhere by the macro lens.").

B. U.S. Patent App. Pub. No. US 2013/0300838 ("Borowski")

88. Borowski is titled *Methods and Devices for Generating a Representation of a 3D Scene at Very High Speed*. EX1006. Borowski was published on November 14, 2013.

89. Borowski "relates to a 3D landscape real-time imager" that includes "at least one illuminating part … designed to scan at least a portion of the landscape at a given range and having an ultra-short laser pulse source emitting at least one wavelength," "an optical rotating block, with a vertical axis of rotation, and controlled such that given packets of pulses are shaped in a pattern of rotating beams sent toward the said at least partial landscape," and "at least one receiving part [having] a set of SPAD detector arrays, each arranged along a vertical direction and rotating at a given speed in synchronism with the optical rotating block of the illuminating part" so that "the detection data of the SPAD detector arrays [is] combined to acquire 3D imaging data of the said at least partial landscape." *Id.*, Abstract.

90. Borowski "provide[s] an imaging technique capable of generating a precise image of complex scenes in a faster way than with conventional imaging techniques." [0003]. The technique also "offers an improved trade-off between image depth resolution and fast data acquisition for the detection of movements." *Id.*

91. Borowski notes "the recovery time of the SPADs" is a limiting acquisition speed of the imager. *Id.*, [0044] ("After a SPAD has been triggered, it cannot receive further signals within a recovery time of the order of 20 ns."). According to Borowski, "this limitation can also be eliminated by using multiple SPADs" so that "[e]ven if some of the SPADs have been triggered already, the remaining SPADs can still receive light." *Id.* "In that way, the pulse spacing in the pulse trains can be reduced to values even well below the SPAD recovery time." *Id.* (further noting the addition of a diffuser "will statistically distribute the photons on different SPADs, so that there is at least a substantial probability that further photons hit SPADs which have not been triggered yet").

92. Borowski utilizes "ultra-sensitive SPADs, which can be easily fabricated with a CMOS process, combined with a simple low cost germanium process." *Id.*, [0014]. "In the example shown in FIG. 1 [reproduced below], four SPAD sensor cells 3-6 are built on the same first CMOS IC 1." *Id.*, [0154].

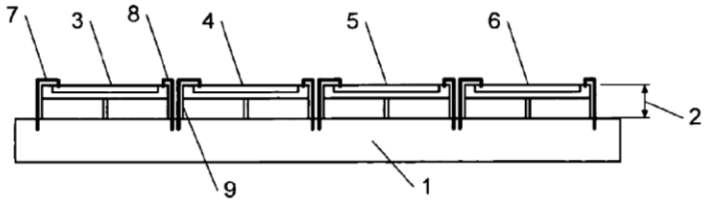

Id., FIG. 1, [0154-57]

93. Acknowledging "the SPAD sensor array [in FIG. 1] is under a pseudo-linear shape," Borowski notes that "[i]n other embodiments, the SPAD sensor array

is designed as a 2D architecture, each SPAD sensor cell having a geometric shape designed to be jointly contacted with its neighbors." [0157].

94. In FIG. 12(a) (reproduced below), Borowski describes a macro-cell as "a 4-SPAD sensor cell 92 of the SPAD sensor array." [0233].

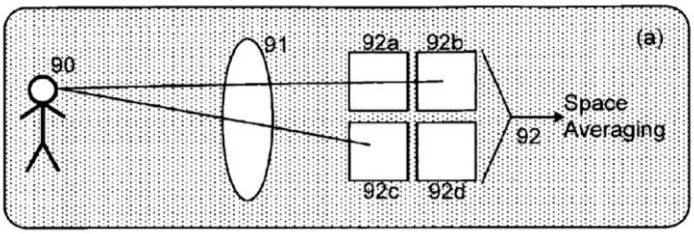

Id., FIG. 12(a)

95. In this illustrated example,

> After a single pulse is received from an object 90 in the illuminated scene through a convenient collecting optics 91, only two SPADs 92 b and 92 c are impinged by photons related to the emitted light pulse series of the illuminating device. A DSP associated with the 4-SPAD sensor cell arranged in a macro-cell reads in the timestamp values of each of the four SPAD sensor cell 92a, 92b, 92c and 92d, and then an averaging in space is performed and used as a partial data of a part of a representation of the illuminated 3D scene. *Id.*, [0233], *see also* FIG. 27, [0323] ("N diodes … will react like a single SPAD with a very fast recovery time.").

96. Borowski further provides examples of its "optical rotating block with a vertical axis of rotation," (abstract), where "the SPAD detector array [] is rotated around a vertical axis," [0293], FIG. 25; [0167], [0283], [0285], [0291-92], [0294-300], FIG. 24 (rotations of optics).

C. U.S. Patent Pub. No. 2014/0211194 ("Pacala")

97. Pacala is titled *Cost-effective lidar sensor for multi-signal detection, weak signal detection and signal disambiguation and method of using same*. EX1013. Pacala was published on July 31, 2014.

98. Pacala teaches a LiDAR device with a static base 50 that includes a motor and distributed electronics to rotate a turret 60. EX1006, [0013]. Mounted on the turret is an optical system with optoelectronic elements 70, bulk optics 80, and additional electronics:

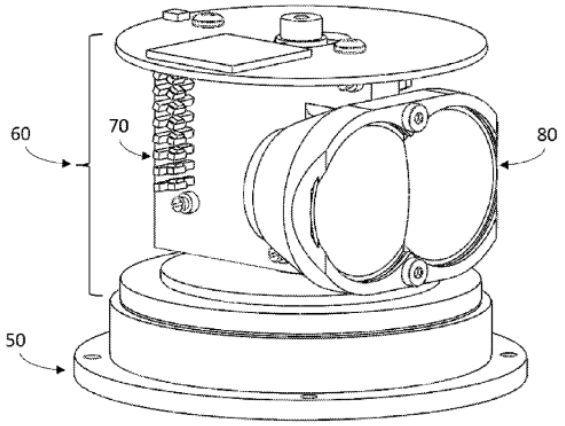

Fig. 2

Id., FIG. 2.

99. Pacala explains that the optoelectronics components 70 include transmitters in the form of lasers, and receivers using SPADs. *Id*., [0012]-[0014]. The device electronics include a TDC to perform time-of-flight calculations. *Id*.

D. U.S. Patent No. 8,736,818 ("Weimer")

100. Weimer is titled *Electronically steered flash LIDAR*. EX1008. It issued on May 27, 2014.

101. Weimer is directed to vehicle-based LiDAR devices. *Id*., FIGS. 1A-D, 4:4-6. Weimer notes that a challenge in these devices is their ability to illuminate large scenes at long distances. *Id*., 1:36-46. In this regard, Weimer explains that: "Large fields of view per detector are not desirable because a wide field of view results in the acceptance of more background light than a narrower field of view, reducing the signal to noise ratio." *Id*., 1:53-56. Thus, "the goal for good daytime performance has been to have the laser spot size only slightly smaller than the receivers instantaneous field of view." *Id*., 1:56-59. To achieve that goal, Weimer teaches controlling the emission pattern of individual laser beams to match the field-of-view of a corresponding detector. *Id*., 4:56-58.

102. An example embodiment is shown in Figure 3A. It includes a transmit section with a multi-beam laser output 208 passed through a bulk optic 318, and a receiver section with a multi-pixel detector array 324 and a bulk optic 322:

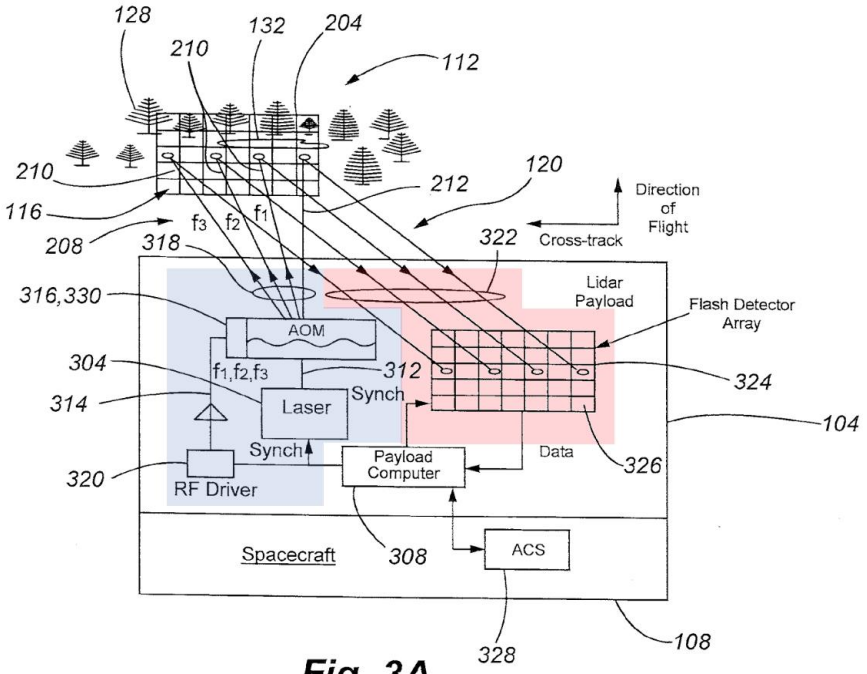

Fig. 3A

Id., FIG. 3A (annotated), 10:17-45.

103. Weimer explains that the illumination source may include a VCSEL array. *Id*., 9:32, 11:39-41. And Weimer teaches that "individual beams 208 can be directed to cover an area corresponding to a single pixel of the detector." *Id*., 4:56-58.

E. U.S. Patent No. 7,787,105 ("Hipp")

104. Hipp is titled *Taking Distance Images*. EX1007. Hipp issued on August 31, 2010.

105. Hipp teaches a laser scanning device that uses pulsed time-of-flight to take distance measurements. *Id*., 1:27-37. A goal described by Hipp is to improve the speed of these measurements over existing 2D and 3D devices. *Id*., 4:27-33.

The device includes a transmit section with an array of laser diodes and a receive section with an array of APDs:

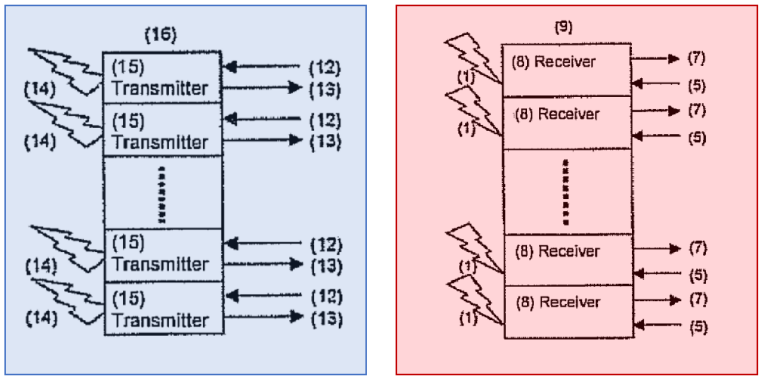

Id., FIGS. 3 and 6 (annotated), 11:63-65, 12:16-22.

106. In one embodiment, the device includes sixteen lasers with sixty-four APD detectors. *Id.*, 19:43-48. In another embodiment, there is a one-to-one correspondence of lasers and APDs. *Id.*, 21:23-28. Hipp recognizes that a problem associated with densely packed emitter and detector arrays is signal interference. *Id.*, 21:46-56 ("electrical interference pulses arise which superimpose themselves with the desired signals, which is a basic problem of the array technique."). To address that concern, Hipp teaches a "shadow mask … designed such that only that light is transmitted which would also be incident on the active zones of the APDs." *Id.*, 21:57-67. The shadow mask 134 is shown in Figure 16, and includes small holes that allow light to pass through to an intended detector:

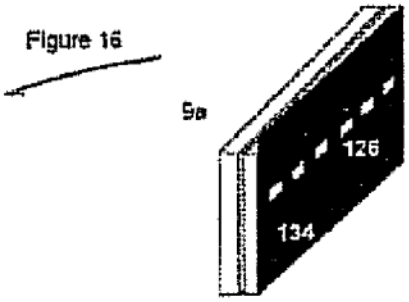

Id., FIG. 16.

107. Hipp teaches that the shadow mask "is attached directly to the APD array," and "[t]he remaining light can be avoided in that the shadow mask is mirror coated superficially, with it thus being achieved that the unwanted light does not enter into the region of the active zones at all or in that the shadow mask is printed onto the cover plate of the APD array or onto an APD with impermeable material." *Id*., 21:60-67. Hipp also recognized that "some of the light which passes through the holes of the shadow mask could be reflected by the APD" and "backscattered" in a manner that causes interference with other APDs. *Id*., 22:1-7. To prevent this, Hipp uses light-absorptive material on the underside of the shadow mask. *Id*., 22:7-10.

F. U.S. Patent App. Pub. No. 20160274223 ("Imai")

108. Imai is titled *Object detecting device, sensing device, and mobile object device*. EX1009. Imai was filed as JP2015-055314 on March 15, 2015.

109. Imai describes a "scanning laser radar" for "emitting light and detecting a distance to the object by … receiving reflected light (scattered light) from the object." EX1009, [0027], FIG. 1, [0029] ("The laser radar 100 is provided with an LDA (laser diode array) including a plurality of LDs (laser diodes) as a light source"), [0030] ("Each LD of the LDA is driven by the LD driving device 12 to emit laser light."), [0040] (distance calculation unit 46), [0048] (measuring time (measuring distance)), 5:28-45; EX1027, [0009]-[0011], [0021], [0048].

110. Specifically, FIG. 2A (annotated below) "illustrates the light projecting optical system 20 and the synchronization system 50." where "[t]he light projecting optical system 20 includes a <u>coupling lens 22</u> arranged on an optical path of the light from the LDA, a reflecting mirror 24 arranged on the optical path of the light through the coupling lens 22, and <u>a rotary mirror 26</u> as a deflector arranged on the optical path of the light reflected by the reflecting mirror 24." *Id.*, [0031].

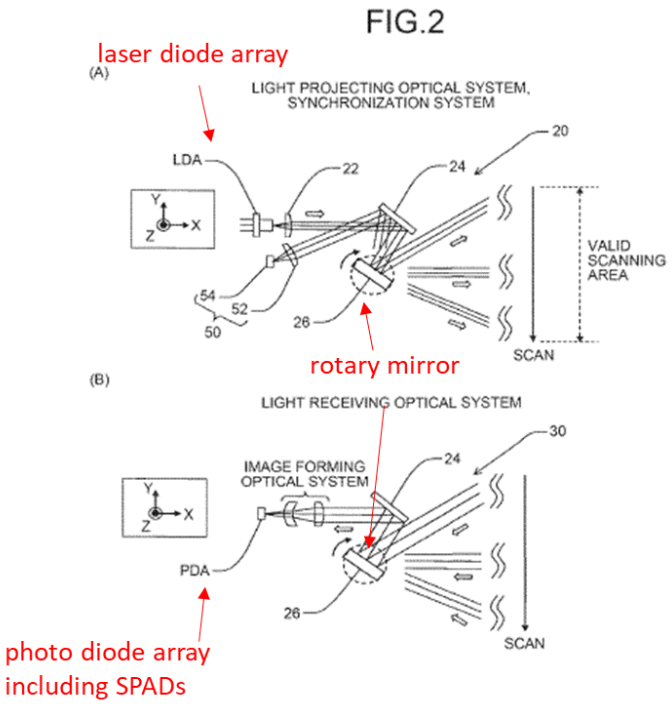

EX1009, FIGS. 2A (top), and 2B (bottom) (annotated); EX1027, FIGS 2A, 2B.

111. As depicted in FIG. 2B (annotated above), "[t]he light receiving optical system 30 includes the rotary mirror 26 which reflects the light projected from the light projecting optical system 20 to be reflected (scattered) by the object located in the valid scanning area, the reflecting mirror 24 which reflects the light from the rotary mirror 26, and an image forming optical system arranged on the optical path of the light from the reflecting mirror 24 to form an image of the light on a PDA (photo diode array) as an optical detector." *Id.*, [0037]; EX1027, [0018].

112. Imai particularly teaches using "an APD (avalanche photodiode), a SPAD (single photon avalanche diode) being used as a Geiger mode APD …. as a light receiving element … for measuring time (measuring distance)" because "APD

and SPAD having a higher sensitivity than that of the PD are advantageous in detection accuracy and detection distance." *Id.*, [0048]; EX1027, [0029].

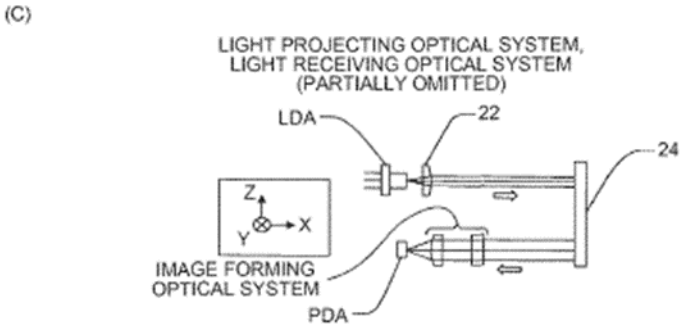

EX1009, FIG. 2C

113. As depicted in FIG. 2C, coupling lens 22 of the projection optical system 20 and imaging lens on the light receiving optical system 30 are adjacent to each other, which comports with the description of the '750 Patent. *Compare*, *id.*, [0038], FIG. 2C *with* EX1001, 11:11-13 ("bulk transmitting optic is adjacent and offset laterally and/or vertically from the bulk imaging optic"), FIGS. 1-2.

114. Imai teaches using the same rotary mirror 26 on the light projecting optical system 20 and the light receiving optical system 30 to synchronously form the image using the scanned pattern depicted in FIG. 6 (annotated below showing main-scanning and sub-scanning directions) and based on "[t]he light projected from the light projecting optical system 20 … reflected (scattered) by the object [and then] guided to the image forming optical system through the rotary mirror 26 and the reflecting mirror 24 to be concentrated on the

PDA by the image forming optical system." *Id.*, [0037], [0033-35], [0078-81], [0101], [0109-12]; EX1027, [0013]-[0018]; [0059]-[0062]; [0082]; [0090]-[0093].

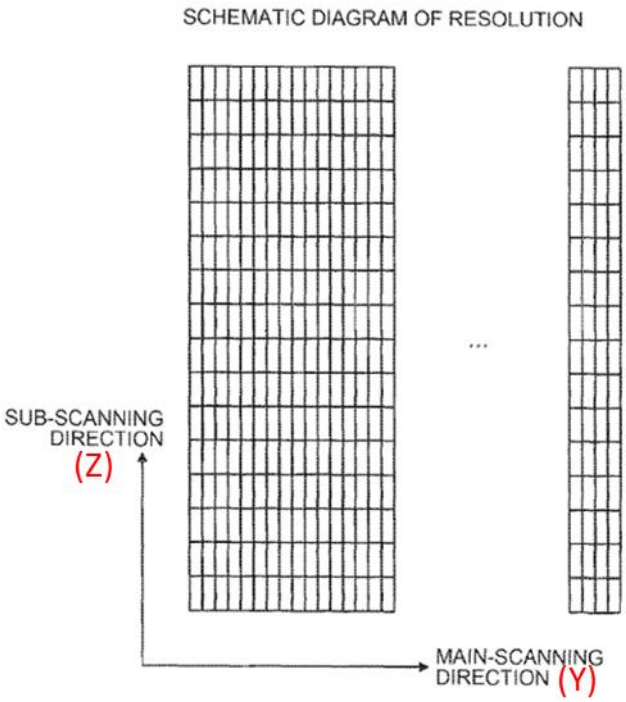

EX1009, FIG. 6 (annotated showing main-scanning (Y) direction and sub-scanning (Z) direction)

115. Imai employs "the LDA (light source) including a plurality of LDs (light emitting units) arranged in the Z-axis direction (direction corresponding to the sub-scanning direction [shown above]), the rotary mirror 26 (deflector) which deflects the light from the LDA, and the PDA (optical detector) including a plurality of PDs (light receiving units) arranged in the direction corresponding to the sub-scanning direction so as to correspond to a plurality of LDs to receive the light deflected by the rotary mirror 26 to be reflected by the object." EX1009, [0072];

[0060-65], [0067], [0036], [0047], FIGS. 4A, 5, 7 (same); EX1027, [0017]; [0028]; [0053]; [0041]-[0048]; FIGS. 4A, 5, 7.

116. I note that the claims of Imai (EX1009) are supported by the description of JP2015-055314 (EX1027). For example, each element of claim 1 of Imai (EX1009) is described in JP2015-055314 (EX1027):

Imai (EX1009) – Claim 1	**JP2015-055314 (EX1027)**
1. An object detecting device comprising:	[0001] ("The present invention relates to an object detection device, a sensing device, and a mobile device, and more specifically, the present invention relates to an object detection device that detects the presence or absence of an object, a distance to the object, and the like, a sensing device that includes the object detection device, and a mobile device that includes the object detection device or the sensing device."); *see also* [0004], [0007]-[0017]
a light source which includes a plurality of light emitting units arranged in a sub-scanning direction;	[0004] ("The present invention is an object detection device comprising a light source comprising a plurality of light emitting units arranged in a sub-scanning direction, a deflector deflecting light from the light source, and a light detector comprising a plurality of light receiving units arranged in a sub-scanning direction corresponding to the plurality of light emitting units, wherein the light detector receives light deflected in the deflector and reflected in the object."); *see also* [0010], [0059], [0066]

a deflector which deflects light from the light source; and	[0066] ("The laser radar 100 of the present embodiment described above includes an LDA (light source) comprising of a plurality of LDs (light emitting units) arranged in the Z-axis direction (direction corresponding to the sub-scanning direction), a rotating mirror 26 (deflector) that deflects the light from the LDA, and a plurality of PDs (light receiving units) arranged in a direction corresponding to the sub-scanning direction corresponding to the plurality of LDs, and a PDA (light detector) that receives the light deflected by the rotating mirror 26 and reflected by the object."); *see also* [0013], [0125]
an optical detector which includes a plurality of light receiving units arranged in the sub-scanning direction so as to correspond to the plurality of light emitting units, and receives light deflected by the deflector and reflected by an object.	[0004] ("The present invention is an object detection device comprising a light source comprising a plurality of light emitting units arranged in a sub-scanning direction, a deflector deflecting light from the light source, and a light detector comprising a plurality of light receiving units arranged in a sub-scanning direction corresponding to the plurality of light emitting units, wherein the light detector receives light deflected in the deflector and reflected in the object."); *see also* [0018], [0042], [0099]

G. JP Publication No. JP 2015-078953 ("Higashi")

117. Higashi is titled *Radar Device*. EX1011 (certified translation). Higashi was filed as 2013-217397 on October 18, 2013 and published on April 23, 2015.

118. Higashi teaches "[a] radar device 1 is mounted in a vehicle and comprises of a light source 2, a one-dimensional scanner 3, a scanning control unit 4, a light detection unit 5 and a processing unit 6." EX1011, [0015], FIG. 1.

119. The radar device 1 also includes collimating lens 41, vibrating mirror 3, receiving lens 42, and a two-dimensional pixel array 21. EX1011, FIG. 3 (annotated below), [0021] ("the light source 2 irradiates the laser light … via the collimating lens 41 … when the laser light … emitted forward of the vehicle reaches an object located in front of the vehicle …, the laser light is reflected by this front object [and] reaches the two-dimensional pixel array 21 after passing through the light receiving lens 42"), [0022].

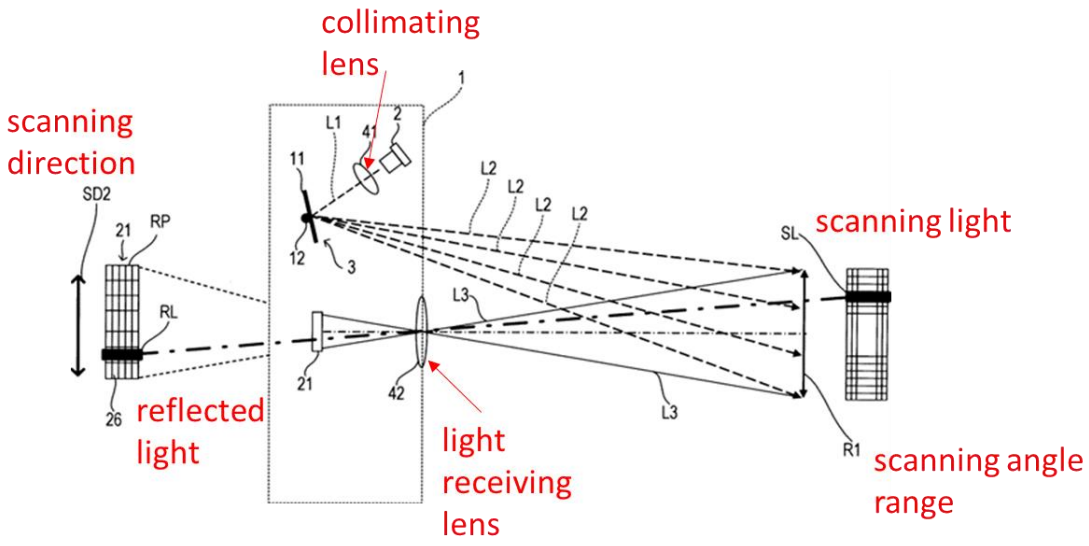

EX1011, FIG. 3 (annotated)

120. "The one-dimensional scanner 3 … vibrates the mirror 11 … about the axis of rotation 12 …, thereby performing a one-dimensional scan … in a predetermined scanning angle range R1." *Id.*, [0016] ("The scanning mechanism … is composed of a MEMS (Micro Electro Mechanical System) or a micromotor").

121. Higashi teaches that "the reflected light is irradiated onto the light receiving surface RP on which a plurality of pixels 26 are arranged in a two-dimensional matrix [of pixel array 21]." *Id.*, [0065], [0066] ("a single laser light irradiation by the light source 2 can irradiate the reflected light to one pixel 26 along the scanning direction SD2 and simultaneously irradiate the reflected light to multiple pixels 26 along a direction perpendicular to the scanning direction SD2").

122. Higashi teaches that each pixel of its pixel array 21 includes multiple SPAD cells. EX1011, FIG. 4 (annotated below), [0027] ("the pixel 26 comprises

four light receiving elements 51 and a readout circuit (Read Out Circuit) 52 provided corresponding to each of the four light receiving elements 51. The light receiving element 51 of this embodiment is a single photon avalanche diode (SPAD).”).

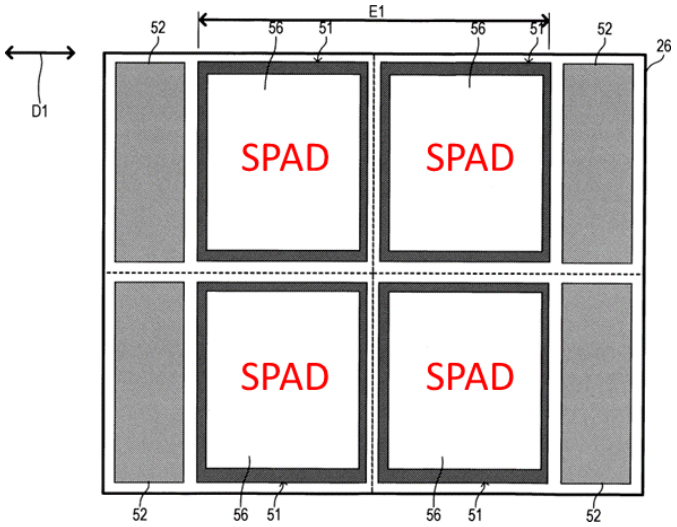

EX1011, FIG. 4 (annotated)

H. U.S. Patent Application Publication No. 2017/0040368 to Grzesik (“Grzesik”)

123. Grzesik is titled *Photodiode placement for cross talk suppression*. EX1012. Grzesik was filed April 14 2015.

124. Grzesik teaches “avalanche photodiodes (APDs) operating in Geiger-mode (GM) can be employed to detect single infrared photon arrival with sub-nanosecond accuracy.” EX1012, [0003]. “One limitation of such densely packed Geiger-mode APDs arrays is optical cross talk.” *Id.*, [0006] (“Some of these charge carriers lose energy by emitting . . . a spectrum of photons, which can be absorbed

and detected at other photodiodes in an array of photodiodes disposed in the substrate [known as secondary detection]").

125. "[T]o reduce optical coupling between the photodiodes in the array," Grzesik discloses "one or more cross talk absorption layers 60 … disposed on … the photodiode array substrate 12." EX1012, [0033], FIG. 3 (annotated below). "The cross talk absorption layer 60 is provided in a pattern that includes open, exposed surface regions or apertures 62 for allowing input radiation to enter the substrate and each photodiode 14, 16, 18. The cross talk absorption layer 60 also includes surface regions 64 which cover the substrate 12 with absorption material." *Id.*, [0033].

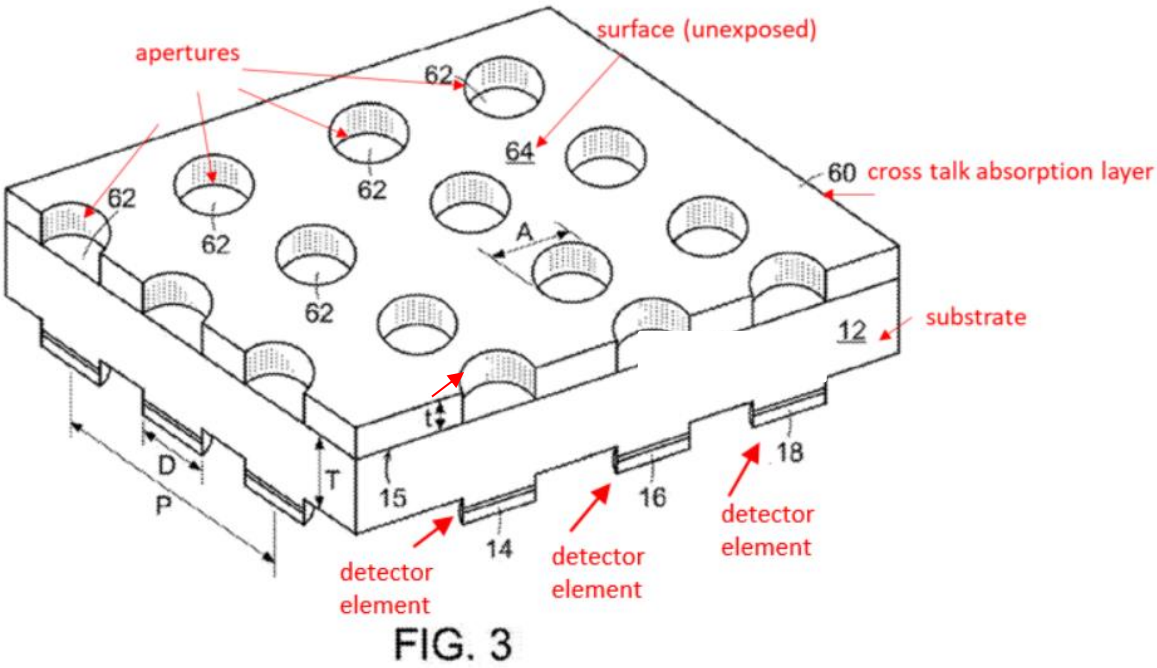

EX1012, FIG. 3 (annotated)

XI. OBVIOUSNESS ANALYSIS FOR THE CHALLENGED CLAIMS

126. In this section, I provide an analysis of how the prior art renders obvious claims 44-48 and 50 of the '750 Patent. I have organized my analysis into the following grounds:

Grounds	Claims	Statutory Basis	Prior Art
1A	44, 45, 48, and 50	§103	Retterath in view of Borowski
1B	44-48 and 50	§103	Retterath in view of Borowski and Weimer
1C	44, 45, 48, and 50	§103	Retterath in view of Borowski and Hipp
1D	44-48, 50	§103	Retterath in view of Borowski, Weimer, and Hipp
2	44-48, 50	§103	Imai in view of Higashi and Grzesik
3	44-48, 50	§103	Weimer in view of Borowski and Hipp

127. For each ground, I address motivation to combine and reasonable expectation of success, and then analyze the teachings of the prior art on an element-by-element basis.

A. Ground 1A: Retterath and Borowski Render Obvious Claims 44, 45, 48, and 50

128. For the reasons set forth in detail below, and based on my review of the '750 patent, file history, and the prior art references cited in my analysis, a POSITA would have readily understood that the combined teachings of Retterath and Borowski provide all elements of claims 44, 45, 48, and 50.

129. Retterath teaches a LiDAR device with an array of emitters, each with a narrow beam spot to produce a plurality of non-overlapping emission regions. Retterath also teaches a plurality of pixels, each with a field-of-view coincident with the emission region of a corresponding emitter. Retterath does not specify the type of pixel used in explicit detail, and it would have been obvious to select SPAD arrays based on the teachings of Borowski. Borowski explains that SPAD arrays improve detection capability in time-of-flight sensors like Retterath. A POSITA would have been motivated to combine the teachings of Retterath and Borowski to achieve the known benefits of SPAD arrays, including improved gain and detection sensitivity.

1. Predictable combination of Retterath and Borowski

130. Based upon my review of the references and my knowledge and experience in this field, it is clear that a POSITA would have been motivated to combine the teachings of Retterath and Borowski. This is particularly the case in view of the relatively late time frame leading up to September 2015 (the filing date of the provisional application).

131. As I explain above, Retterath describes a LiDAR system including an array of detectors (e.g., "detector elements 200") that detect beams reflected off objects in the field. EX1005, Abstract, 3:5-9, 6:23-28, 7:41-8:14, 8:20-40, 9:53-10:31, FIGS. 4, 5A, 6, 8, 10. Borowski provides a straightforward suggestion for implementing SPADs for each of the detector elements in such a LiDAR device. For

example, Borowski describes a 3D landscape real-time imager that includes an illuminating part, an optical rotating block, and a receiving part having "a set of SPAD detector arrays." EX1006, Abstract, [0003], [0014], [0027], [0044], [0154-57], [0233], [0323], FIGS. 1, 5, 12, 27.

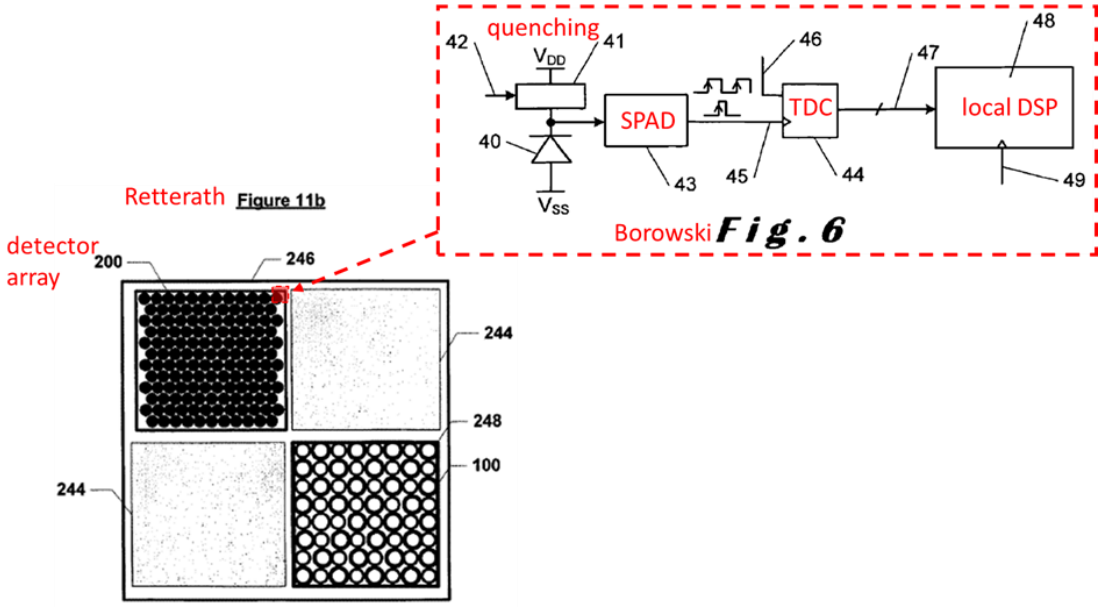

EX1005, FIG. 11b (left), EX1006, FIG. 6 (left) (annotated)

132. In the resulting combination, as depicted above, each pixel in the detector array 200 on Retterath's LiDAR system (e.g., EX1005, FIG. 11b) would have been implemented based on Borowski's suggestions of a SPAD detector (e.g., EX1006, FIG. 6 (depicting 4 SPAD cells per pixel) along with a quenching circuit and signal processing circuitry (e.g., time-digital-converter (TDC) and digital signal processing (DSP) processor) adapted for photon counting to improve sensitivity and imaging speed. EX1006, FIGS. 6, 11, 12a, 12b, 18-19, [0223-24, 27-28], [0021],

[0034], [0042], [0062], [0127], [0192], [0197-98], [0241-42], claim 23. Significantly, each pixel in the detector array 200 of Retterath's LiDAR system would have been implemented as a "macro-cell" having multiple SPADs to pursue the predictable benefits of smart averaging in time and space, enhancing image depth and acquisition speed, based on Borowski's disclosure. *See e.g.*, EX1006, FIG. 12a, [0233] (4-SPAD macro-cell), and [0323] ("N diodes [in FIG. 27] will react like a single SPAD with a very fast recovery time"); EX1029, [0033] ("a SPAD cell [in FIG. 2B] comprising two SPAD structures," [0034] ("dual SPAD structures in a SPAD cell [in FIG. 3A]"). In doing so, the resulting combination would have predictably (and beneficially) employed a conventional operating wavelength (in one example, the infra-red region around 1500 nm, as suggested in both Borowski and Retterath) to provide safe and effective laser emission and detection "as part of a human safety strategy to illuminate a scene containing human beings." EX1005, 19:34-54 ("the light energy is emitted and received as collimated or coherent electromagnetic energy, such as common laser wavelengths of 650 nm, 905 nm or 1550 nm" and "the light energy can be in the wavelength ranges of ultraviolet (UV)—100-400 nm, visible—400-700 nm, near infrared (NIR)—700-1400 nm, infrared (IR)—1400-8000 nm, long-wavelength IR (LWIR)—8 um-15 um, or far IR (FIR)—15 um-1000 um"); EX1006, [0111] ("select wave-lengths in a range which is safe to the eyes of the persons which can be targeted by the illuminating device.");

EX1017, 5:10-15 ("VCSELs can also be fabricated to emit light at various different wavelengths. For example, VCSELs with emission wavelengths in the approximately 1-1.5 μm range are useful for lidar implementations because various wavelengths in that range have certain atmospheric transmission advantages, e.g., low absorption").

133. As I explain below, based on my review of Retterath and Borowski, and my knowledge and experience in the field, a POSITA would have understood that Borowski's suggestions would have been predictably applied to the LiDAR system of Retterath so that multiple SPADs per pixel were utilized, achieving known benefits.

134. As a first reason, a POSITA would have been motivated to predictably combine Retterath and Borowski to enhance the signal to noise ratio of Retterath's detectors. A POSITA would have readily recognized that, by doing so, system performance would be improved. For example, a POSITA would have recognized, based on Borowski's suggestions, that utilizing SPADs in Retterath's system would have improved sensitivity by facilitating detection of single photons. *See e.g.*, EX1006, [0019]. Borowski explicitly described the benefit that SPADs "are able to switch (avalanche) when receiving single photons." *Id.* Such sensitivity would have facilitated an enhanced signal-to-noise ratio and improved scene detection. I note that these benefits of SPADs were widely known in the prior art. *See e.g.*, EX1023,

8 ("SPADs have a very high sensitivity, with the ability to detect single photons, and they can be easily incorporated into an array since their operating voltage is low."), EX1019, 4 (describing SPADs as having "extraordinary" sensitivity for LiDAR applications). Moreover, in doing so, emitter power can be reduced, which facilitates a compact design (e.g., by using smaller emitters).

135. As a second reason, a POSITA would have been motivated to implement Retterath's LiDAR system using multiple SPADs per pixel, based on Borowski's suggestions, to achieve the performance advantages of SPADs known before September 2015. These include a high data-rate output in combination with low-power operation, and with the high signal-to-noise ratio described above, on an integrated circuit, for example. *See e.g.*, EX1028, [0012]-[0014] ("Single photon avalanche diodes are photosensitive detectors which can be implemented in standard CMOS technology and which, in a similar manner to avalanche photo diodes, convert incident photons into current pulses. Unlike avalanche photo diodes, however, single photon avalanche diodes are operated over an avalanche voltage. A single incident photon thus already triggers an avalanche effect which can be detected as a current pulse. Amplification factors of 10^5 to 10^6 allow a high sensitivity and thus the detection of even single photons."), [0020]-[0021] ("Single photon avalanche diodes can be manufactured in a standard CMOS process."), and EX1012, [0003] ("Electronic avalanche photodiodes (APDs) operating in Geiger-

mode (GM) can be employed to detect single infrared photon arrival with sub-nanosecond accuracy"), [0005] ("Geiger-mode APD arrays bonded directly to readout circuits (ROICs)"), [0029] ("Photodiodes in the array can be connected directly to circuitry, such as a photodiode read out integrated circuit (ROIC)").

136. As a third reason, a POSITA would have been prompted to combine Retterath and Borowski to utilize multiple SPADs for each pixel to improve detection capability and accuracy. *See e.g.*, EX1023, 8. Based on my knowledge and experience in the field, a POSITA would have recognized from Borowski's teachings that multi-SPAD pixels advantageously increased the likelihood the pixel would more accurately detect photons, especially when one or more of the individual SPADs was subject to quenching and reset. EX1006, [0053]; [0044]; EX1028, [0049]-[0050], [0138]-[0139]. Borowski describes the output of a multi-SPAD pixel would be filtered and averaged such that it "acts as the equivalent of a single 'perfect' SPAD having no recovery time," which was a known benefit at the time. EX1006, [0053].

137. As a fourth reason, a POSITA would have been motivated to avail Retterath of Borowski's express suggestion for "an improved trade-off between image depth resolution and fast data acquisition for the detection of movements" ([0003]), by "local averaging between adjacent detectors to optimize the tradeoff between speed and sensitivity." EX1006, [0026], *see also* [0083] ("FIG. 12

illustrates smart averaging in time and space for a 4-SPAD detector macro-cell), [0136-38] (an example of local averaging "in space and/or time … of at least some of the SPAD diodes"), [0220] ("a programmable size, multidetector which optimizes the resolution/speed ratio (at macro-cell level)" and "multiply the speed"), [0221] ("Another macro-cell optimization technique … to improve the speed and resolution of the SPAD sensor array"), [0222] ("The macro-cells of programmable size will also encompass the local DSP of the macro-cell"), [0233] ("a smart averaging in time and space for a 4 SPAD macro-cell" in which "a 4-SPAD sensor cell 92 of the SPAD sensor array is arranged in a macrocell to produce an averaging at four pixels distributed on a square in the SPAD sensor array"), [0237] ("smart, variable averaging of data between close groups of SPADs (at the macro-cell level)"), [0248] ("In a macrocell, the depth Z of a dot is acquired on the basis of an digital averaging of the times stamps detected at the TDC converters of the SPAD detector cells linked to the determined macrocell. At the time a first and a second dot are acquired at the macrocell level, the same interpolation process is programmed onto the local DSP associated with the said macrocell. An enhanced resolution is then obtained."), [0249] ("The control signal granularity can range from the finest (at individual cell level) through the middle fine (at the macro-cell level) to the coarse level (at the global level"), [0258] ("This multi-level organization is essential to limit the data

transfer requirements and allows a flexible, local macro-cell on-demand building"), [0267], [0268], [0269-71].

138. As a fifth reason, a POSITA would have found it obvious to combine Retterath and Borowski because doing so would have been—certainly by the timeframe leading up to September 2015—merely the application of a known technique to a known system ready for improvement to yield predictable results. Multi-SPAD detectors in LiDAR systems were known in the timeframe leading up to the '750 patent, and Borowski suggests known implementations of such multi-SPAD detectors. Retterath describes a known LiDAR system that utilized an array of detectors. Both Retterath and Borowski are analogous and similarly relate to LiDAR systems, and, in my view, a POSITA would have recognized that applying Borowski's suggestion to Retterath's system would have led to predictable results of enabling a user to enhance the sensitivity and extend the capability of the resulting LiDAR device—all while maintaining Retterath's purpose/functionality as a LiDAR unit. In my view, a POSITA would have had a reasonable expectation of success in making the proposed modifications based on the similarity of the emitter/detector systems for distance measurement in Retterath and Borowski. Here, Retterath contemplates that, "while various … configurations … have been described for use with the disclosed embodiments, others besides those disclosed may be utilized." EX1005, 19:55-20:22. Borowski plainly suggests another such configuration—

implementing multi-SPAD detectors in a LiDAR system—a suggestion that was already ubiquitous in the prior art before September 2015. *See e.g.*, EX1006, [0014], [0154]; EX1011, FIG. 4, [0027]; EX1005, 6:57-59.

139. In fact, Geiger-mode/SPAD arrays and their benefits were well known and widely studied in the LiDAR field more than a decade before the priority date of the '750 Patent. In 2003, researchers at the MIT Lincoln Lab studied a "compact 3D imaging laser radar system using Geiger-mode APD arrays." EX1019. The research focused on a Gen-III device for rugged and compact LiDAR applications. *Id*., 2. Marino explains that "Because the Gen-III and similar systems rely upon the photon-counting ability of the Lincoln Geiger-mode APD/CMOS arrays, the sensitivity of these systems is extraordinary." *Id*., 4. Marino further explains that future development of SPAD arrays in 3D LiDAR would continue, and that scaling the technology would be "relatively straightforward." *Id*., 5.

140. Development and use of SPAD sensors for LiDAR and time-of-flight applications continued as predicted. In 2012, researchers at Toyota studied SPAD technology for automotive LiDAR. EX1023. The report notes: "SPADs have a very high sensitivity, with the ability to detect single photons, and they can be easily incorporated into an array since their operating voltage is low." *Id*., 8. These features allowed Toyota to incorporate SPAD pixels into a long-range LiDAR sensor. *Id*., 7-8, 11.

141. Others in the field recognized additional benefits that SPAD arrays provided for time-of-flight LIDAR, including high data-rate output, reduced power, compact design, ease of scalability, integration with CMOS logic, high sensitivity and gain, low-power operation, and a low device profile. EX1028, [0012]-[0014], [0020]-[0021]; EX1012, [0004], [0005], [0029]. They also appreciated that multi-SPAD pixels were designed to ensure the pixel could detect photons when one or more of the individual SPADs was subject to quenching and reset. EX1028, [0049]-[0050], [0138]-[0139].

2. Claim 1

142. Based on my review of Retterath and Borowski, and my knowledge and experience in the field, a POSITA would have found it obvious that Borowski's suggestions, predictably combined with the teachings of Retterath, provide all elements of claim 1. I explain in detail below how each limitation of claim 1 is disclosed by the combination of Retterath and Borowski.

a) Element 44(a): An optical imaging system comprising:

143. The Retterath-Borowski combination provides the recited optical imaging system of element 44(a). Retterath discloses "[a]n array-based light detection and ranging (LiDAR) unit" that "includes an array of emitter/detector sets configured to cover a field of view for the unit." EX1005, Abstract. "LiDAR (light detection and ranging) uses laser technology to make precise distance measurements

over short or long distances." *Id.*, 1:18-20. The system emits light beams to a field to "compute the distance to the reflected object based on a time of flight calculation." *Id.*, 7:28-31, 7:17-40 ("compute the distance to the reflected object based on a time of flight calculation"), 2:66-3:21 ("LiDAR (light detection and ranging) systems in accordance with various embodiments of the invention use an array of emitter/detector sets to cover a given field of view where each emitter/detector set is configured to receive reflected light energy that is on a given coincident axis unique for that emitter/detector set and process time of flight information for that received light energy."), 3:58-61.

144. Also in the Retterath-Borowski combination, Borowski teaches "a 3D landscape real-time imager" with emitters "to scan the landscape at a given range" and SPAD detector arrays "to acquire 3D imaging data of the … landscape." EX1006, [0029]-[0031]; *see also*, Abstract; FIGS. 9-12.

b) Element 44(b): a bulk imaging optic;

145. The Retterath-Borowski combination provides a bulk imaging optic. Retterath discloses a plurality of detector elements 200 arranged in an array as shown in Figure 11b:

Figure 11b

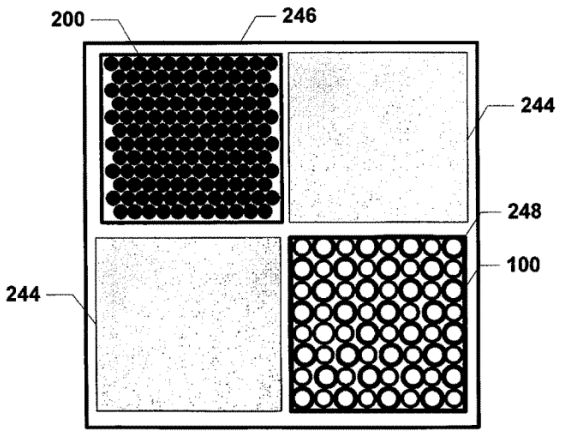

EX1005, FIG. 11b, 6:8-15.

146. The detector array 200 is positioned behind a macro lens 230, which is a bulk imaging optic because it receives light from the external environment and directs it to the detector array in the same manner as the bulk imaging optic in the ’750 Patent:

Figure 10

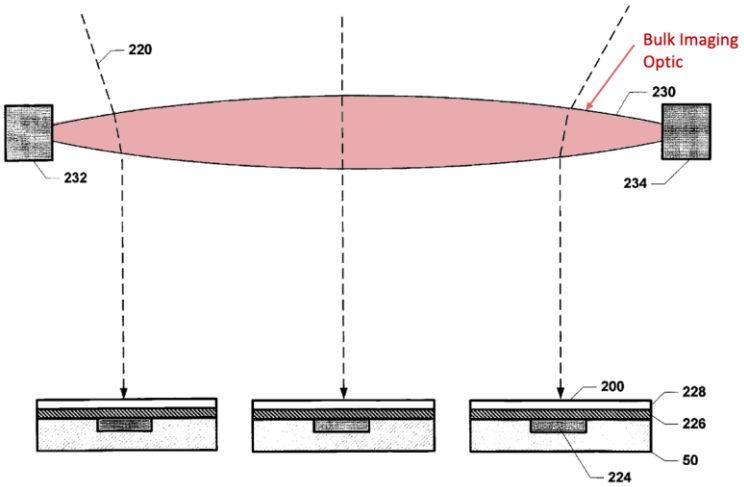

Id., FIG. 10, 10:23-30; EX1001, FIG. 1.

c) Element 44(c): a plurality of pixels arranged behind the bulk imaging optic, wherein each pixel in the plurality of pixels comprises a plurality of single photon avalanche diodes (SPADs) and has a field of view that is non-overlapping beyond a threshold distance in a field external to the optical imaging system with fields of view of all other pixels in the plurality of pixels, and wherein the plurality of pixels includes at least a first pixel and a second pixel;

147. The Retterath-Borowski combination provides element 44(c). Retterath teaches that each detector 200 includes a photoreceptor 224 that comprises a "pixel" because it detects incident light received through bulk optic 230 for a specific location in the array. EX1005, 9:52-10:22, FIGS. 9-10. This is consistent with the '750 Patent, which explains that a pixel may comprise one or more detectors. EX1001, 10:40-54.

148. Retterath also teaches that each pixel in the plurality of pixels has a field of view that is non-overlapping beyond a threshold distance in a field external to the optical imaging system with fields of view of all other pixels in the plurality of pixels. Figures 8 and 9 illustrate the detector geometry:

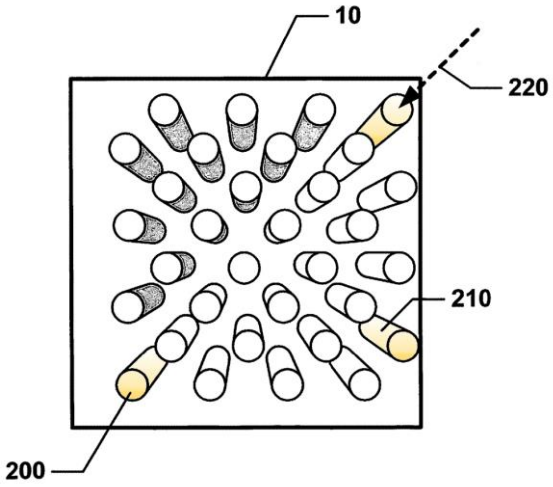

EX1004, FIG. 8 (annotated).

149. Each detector 200—and therefore its photoreceptor 224—has a field-of-view over which it receives light beams 210, each of which is centered along a unique vector 220. *Id.*, 9:56-59 ("Each detector of detector elements 200 has an optimal receive detector vector (coincident axis) 220 along which the maximum optical energy will be transferred."); *see also* 10:24-11:25, 15:14-16:56. I note that the vectors are angularly separated such that the field-of-view for a given detector element is non-overlapping with the field-of-view for all other detector elements at a threshold distance beyond the macro lens. *Id.*

150. Each emitter element 100 includes a collimating lens 66 and directional lens 70 to produce a collimated beam of light 68 that defines an emission region for the individual emitter. EX1005, 8:36-40. The beam—and therefore the emission region—is centered along a unique emission vector 120 as shown below. This is shown in FIGS. 4 and 5A, for example:

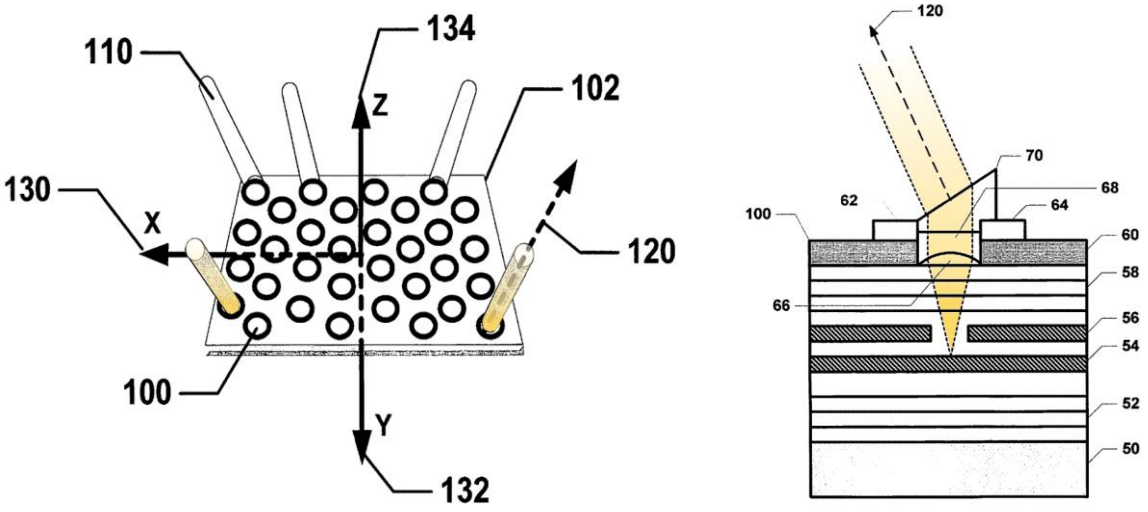

Id., FIGS. 4 and 5A (annotated), 7:61-8:14.

151. Retterath explains that each emission vector 120 is "on-coincident axis" with a corresponding detection vector 220. *Id.*, 6:23-28 ("For each emitter/detector set of elements 100/200, the emitter and detector vectors are coincident and form a common on-coincident axis that is at an angle relative to a vector normal to the plane of the array that is unique for that emitter/detector set."); *Id.*, 6:29-39. Based on my knowledge and experience in the field and my review of Retterath, a POSITA would have readily recognized from this description of Retterath that the field-of-view for each pixel in the Retterath-Borowski combination is non-overlapping beyond a threshold distance in a field external to the optical imaging system with fields of view of all other pixels. EX1005, 6:23-28; 6:29-39; 10:66-11:1. I note additionally that the Retterath-Borowski combination would have been implemented by a POSITA such that each of Retterath's pixels is aligned with Retterath's

corresponding waveguide 222, as I discuss in more detail with reference to element 44(d) and Retterath's FIG. 9. Accordingly, in the combined system, the waveguides further ensure that the field-of-view for each pixel is non-overlapping beyond a threshold distance in the field external to the optical imaging system with fields of view of all other pixels.

152. Retterath describes that each pixel is operable to detect photons emitted from its corresponding optical emitter and received through the bulk imaging optic after being reflected from surfaces within the field. This is shown in Figures 6, 9, and 10, where each photoreceptor receives a beam of light 210 that is coincident with a beam 110 from a corresponding emitter element. EX1004, FIGS. 6, 9, 10, 6:23-28, 8:47-49.

153. The array of detectors 200 on Retterath's LiDAR system would have been implemented, based on Borowski's suggestions to use multi-SPAD detector arrays in which each detector is a macro-cell that includes multiple SPADs, such that each detector array is a pixel comprising a plurality of SPADs. *Supra*, §XI.A.1; EX1005, Abstract, 3:5-9, 6:23-28, 7:41-8:14, 8:20-40, 9:53-10:31, FIGS. 4, 5A, 6, 8, 10; EX1006, Abstract, [0003], [0014], [0027], [0044], [0154-57], [0233], [0323], FIGS. 1, 5, 12, 27.

154. As I discussed previously (refer to Section XI.A.1), a POSITA would have been motivated to use a SPAD array as disclosed in Borowski to implement each pixel in Retterath's LiDAR device.

> *d) Element 44(d): an aperture layer disposed between the bulk imaging optic and the plurality of pixels, the aperture layer comprising a plurality of apertures separated from each other by a stop region, the plurality of apertures including a first aperture disposed in a first optical path extending between the bulk imaging optic and the first pixel and a second aperture disposed in a second optical path extending between the bulk imaging optic and the second pixel;*

155. Retterath teaches the conventional option of including a waveguide layer 215 over the detector array with an aperture at each detector element 200. EX1005, 10:7-22, 3:58-64, FIG. 9, 19:58-61. For instance, Retterath further depicts an example in which the waveguide 222 that defines an opening or aperture for light to pass through along vector 220:

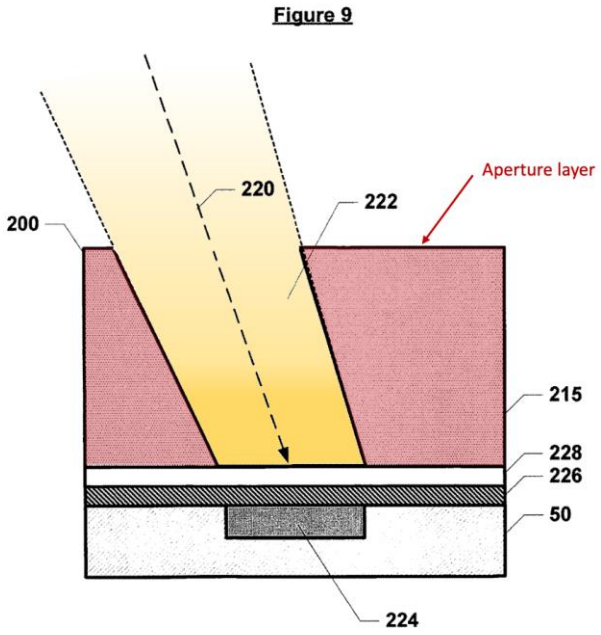

EX1005, FIG. 9 (annotated).

156. The waveguide 222 is formed as "an air gap or shall consist of a material that is substantially transparent to the wavelength of emitted light." *Id.*, 10:12-14. The waveguide material 215 surrounding the waveguide 222 is a stop region that blocks stray light from reaching the detector element. *Id.*, 9:62-65 ("Inbound optical energy that is more than slightly-non-parallel to the receive detector vector (coincident axis) 220 will be substantially blocked by the detector waveguide or directed elsewhere by the macro lens."). Thus, the waveguide helps to define the field of view for its corresponding pixel. *Id.*, 6:20-23.

157. A POSITA would have been motivated, based on Retterath's description, to implement a waveguide layer 215 (FIG. 9) together with the macro detector lens 230 (FIG. 10) to promote reliable detection of desired optical energy

while blocking out extraneous optical energy and reducing cross-talk, which would further improve the signal-to-noise ratio. Consistent with Retterath's description that the waveguide material 215 serves to substantially block inbound optical energy that is more than slightly-non-parallel to the receive detector vector, a POSITA would have recognized that use of the waveguide layer between the macro detector lens and plurality of detectors would further isolate the respective detectors from one another and block extraneous light not directed away from the detector by the macro lens. Moreover, the blocking material of the waveguides would facilitate reduced internal reflections from the neighboring detector elements and/or protective layer, facilitating reduced cross-talk. Notably, Retterath expressly describes utilizing its described features from one embodiment (e.g., FIG. 9) in combination with other embodiments (e.g., FIG. 10), further confirming to a POSITA the predictable benefits and expectation of success in utilizing the macro lens and waveguide features together. EX1005, 19:55-20:12 ("Accordingly, the embodiments are not mutually exclusive combinations of features; rather, the invention can comprise a combination of different individual features selected from different individual embodiments, as understood by persons of ordinary skill in the art. Moreover, elements described with respect to one embodiment can be implemented in other embodiments even when not described in such embodiments unless otherwise noted.").

158. I additionally note that a POSITA would have been motivated to implement Retterath's waveguide layer 215 together with the configuration including Retterath's macro detector lens 230 based on Retterath's express suggestion to do so. For example, Retterath indicates that "elements described with respect to one embodiment can be implemented in other embodiments even when not described in such embodiments unless otherwise noted." EX1005, 19:55-20:12. A POSITA would have recognized, based on Retterath's description of the waveguide, and this straightforward teaching, that structures from one embodiment, such as the waveguide layer 215 of FIG. 9 can be implemented in combination with other embodiments, such as having features shown in FIG. 10. Such an understanding is consistent with my experience, and confirms the predictable benefits that I described above and the expectation of success in using these features together.

159. The waveguide material 215, in the combination, is formed above protective layer 228 and thus disposed between the bulk imaging optic 230 and the plurality of pixels 224:

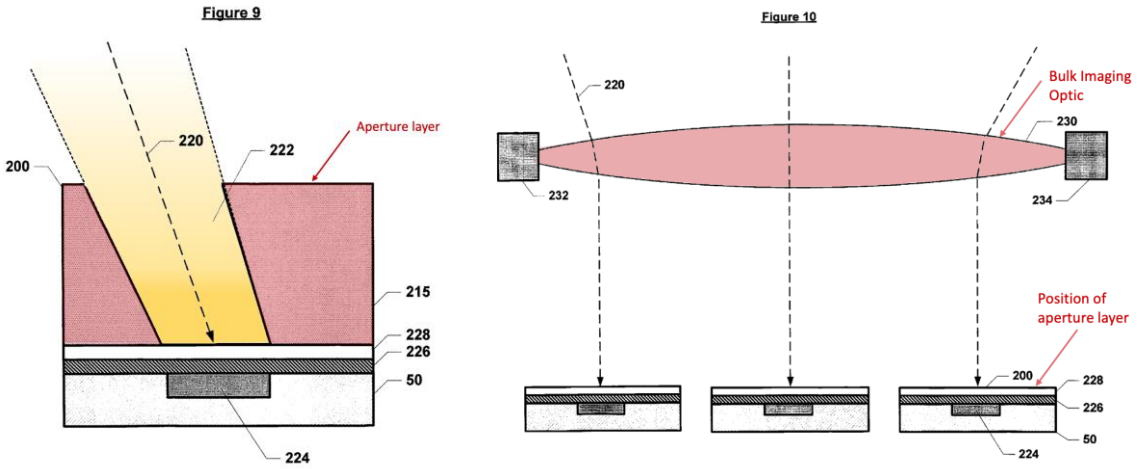

Id., FIGS. 9-10 (annotated).

160. In the resulting combination, based on Retterath's description, a POSITA would have recognized, or found it obvious, that the waveguide material 215 was formed above protective layer 228 and disposed between the bulk imaging optic (e.g., macro detector lens 230) and the plurality of pixels 224. Indeed, doing so would have effectuated Retterath's stated purpose of blocking optical energy that is "more than slightly-non-parallel to the receive detector vector," further ensuring extraneous optical energy not directed elsewhere by the macro lens is not captured by the detector. EX1005, 9:62-65.

161. As explained by Retterath, each detector element 200 includes a dedicated waveguide 222 that forms an aperture over its respective pixel 224. EX1005, 10:4-30, FIGS. 9. Thus, for each detector element 200, an optical path is formed between the bulk imaging optic 230, the aperture 222, and the pixel 224. *Id*. Retterath also teaches embodiments where there are first, second, third, and fourth

detector elements. *Id*., FIGS. 6, 11b. In these embodiments, the device includes first, second, third, and fourth optical paths, each comprising the bulk imaging optic 230, an aperture 222 (e.g., provided by waveguide 222), and a pixel 224. *Id*.

162. To be clear, the waveguides formed over individual pixels are together "an aperture layer," whether or not formed as part of a continuous piece of material. Moreover, a POSITA would have found it obvious to form the waveguides as part of a continuous mask over the detector array, to facilitate manufacturing and fabrication of the detector array assembly, and to prevent extraneous optical energy from reaching the detector by providing continuous coverage via a continuous mask. EX1018, 21:60-22:10, FIG. 16; EX1033, FIGS. 1-2, [0006], [0017]-[0023].

e) Element 44(e): a bulk transmitting optic disposed adjacent to the bulk imaging optic; and

163. The Retterath-Borowski combination provides the claimed bulk transmitting optic. The disclosed LiDAR device includes an array of emitter elements 100, as illustrated in Figure 11b:

Figure 11b

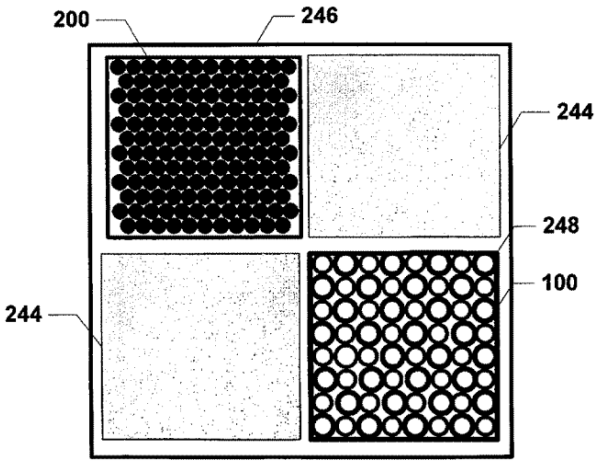

EX1005, FIG. 11b, 6:8-15.

164. Retterath explains that the emitter elements 100 are located behind a macro lens 80, which is a bulk transmitting optic because it receives light from multiple emitters and transmits it to the surrounding environment in the same manner as the bulk transmitting optic in the '750 Patent. *Id.*, FIG. 6, 9:12-20; EX1001, FIG. 1. "The macro lens 80 is configured to diverge to produce a plurality of beams 82 along a multitude of emitter vectors (coincident axes) 120 throughout the device's field of view," as illustrated in Figure 6:

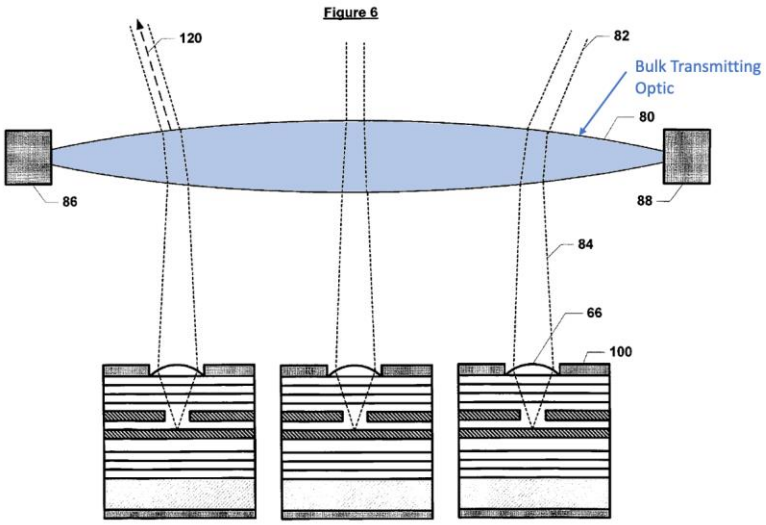

EX1005, FIG. 6 (annotated), 9:12-20.

165. Retterath teaches that the bulk transmitting optic (macro lens 80) is disposed adjacent to bulk imaging optic (macro lens 230). As shown in Figure 11b, the detector array 200 and emitter array 100 are formed as respective electro-optical sections 246, 248, with corresponding electronics 244:

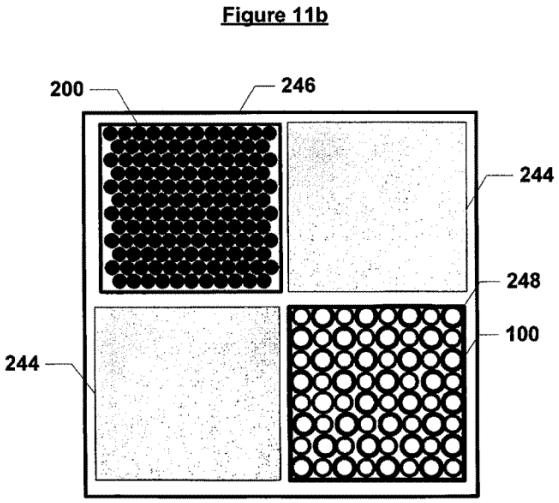

Id., FIG. 11b, 10:62-11:4.

166. Based on Retterath's teaching, the emitter array 100 is adjacent to the detector array 200 next to one another in quadrants shown in FIG. 11b, which thus results in the macro lens 230 (located in front of the detector array 200) being positioned adjacent to the macro lens 80 (located in front of the emitter array 100). The adjacent arrangement is like the arrangement of the '750 patent. *See e.g.*, EX1001, 11:2-7 (offset laterally "and" vertically"); FIGS. 6, 10, 2:27-34 ((showing adjacent elements 150, 160, 170 next to but not abutting one another), 9:12-20, 10:23-30 (similar descriptions with no indication of the range or the criticality of the offset).

167. I further note that the adjacent arrangement disclosed by Retterath was also ubiquitous in such LiDAR devices before September 2015. Multiple publications that corroborate this fact include Pacala, Spies-041, and Spies-977. EX1013, FIG. 2, EX1031, FIG. 6, EX1033, FIGs. 1-2.

f) Element 44(f): a plurality of emitters arranged to project electromagnetic radiation through the bulk transmitting optic and into the field according to an illumination pattern where electromagnetic radiation output from each emitter in the illumination pattern is coincident with a field of view of a corresponding pixel in the plurality of pixels.

168. The Retterath-Borowski combination provides the claimed plurality of optical emitters. As shown below in Figure 6 of Retterath, a plurality of optical emitters 100 are arranged behind the bulk transmitting optic 80. *Id.*, FIG. 6, 9:12-

20. The emitters output converging light beams 84, which are a form of electromagnetic radiation. The beams 84 are output at an operating wavelength, for example 650 nm, 905 nm or 1550 nm. EX1005, 19:33-54. And the converging beams 84 pass through the bulk optic as shown in FIG. 6, into an external field as beams 82:

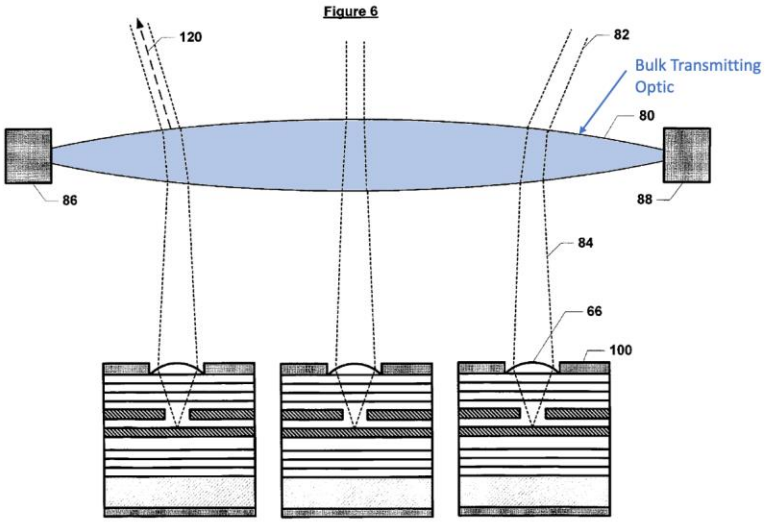

Id., FIG. 6, 9:12-20; *see also*, 3:1-4:34, 6:8-7:40, 7:41-9:12, 9:13-10:3, FIGS. 12-17.

169. Retterath further teaches that its emitter elements 100 output light beams according to an illumination pattern comprising a plurality of non-overlapping emission regions. The upper portion of Figure 7 shows a beam profile for an individual emitter:

Figure 7

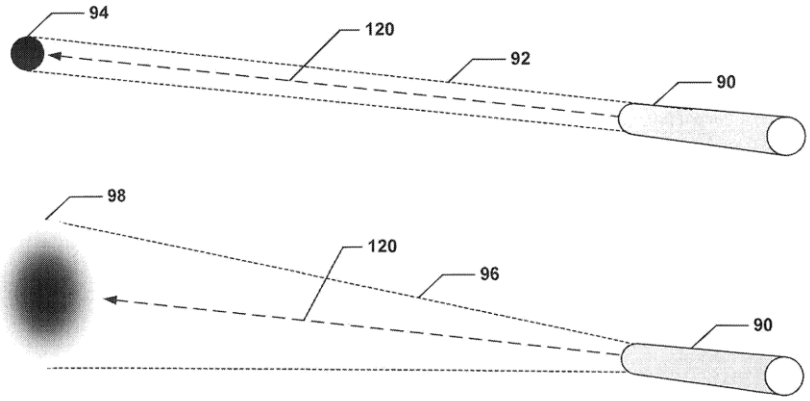

EX1005, FIG. 7, 9:29-30.

170. For example, the "top diagram shows a perfectly collimated beam 92 that produces a round spot 94 on the surface of the reflecting object." *Id.*, FIG. 7, 9:29-36. Retterath explains that collimated beams 92 are preferred over diverging beams 96 because "a smaller round spot 94 size will result in fewer locations within the device field of view being illuminated" and "a smaller round spot 94 will generally reduce or remove crosstalk with detectors that are near the on-coincident axis matched detector for this emitter." *Id.*, 9:35-44. Thus, each emitter has an emission region defined by round spot 94.

171. In this context, Retterath explains, Figure 18a shows "an ideal location 370 for emitted beams" according to an embodiment of Retterath:

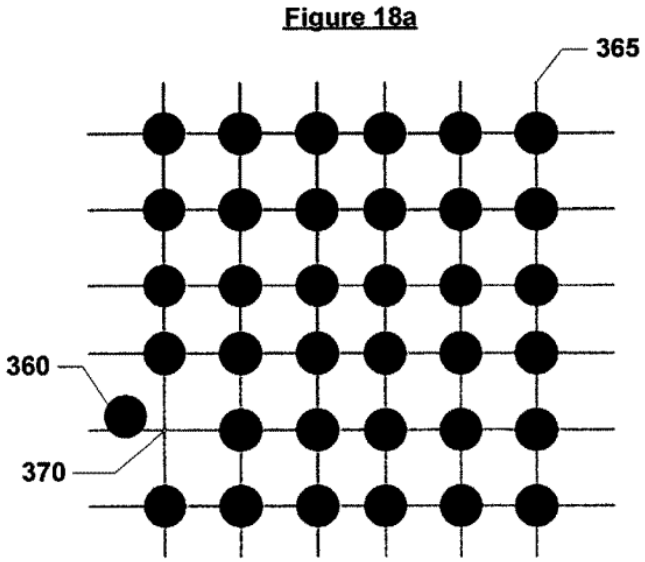

EX1005, FIG. 18a; 17:11-15.

172. The ideal location 370 for each beam spot lies at the intersection of two grid lines, such that the overall illumination pattern has a plurality of non-overlapping emission regions. *Id*. Figures 4 and 6 of Retterath further illustrate an illumination pattern for the optical emitters with a plurality of non-overlapping emission regions. *Id*. Specifically, each beam is output along a unique emission vector 120 and is non-overlapping with all other beams. Electromagnetic radiation output from each emitter in the illumination pattern is coincident with a field of view of a corresponding pixel in the plurality of pixels:

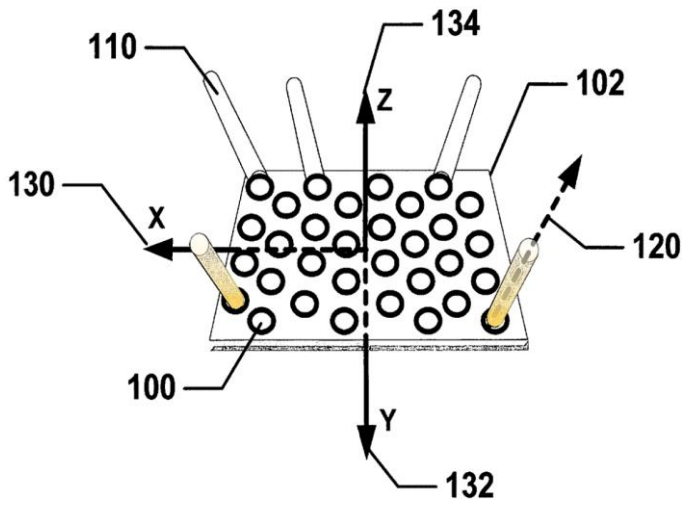

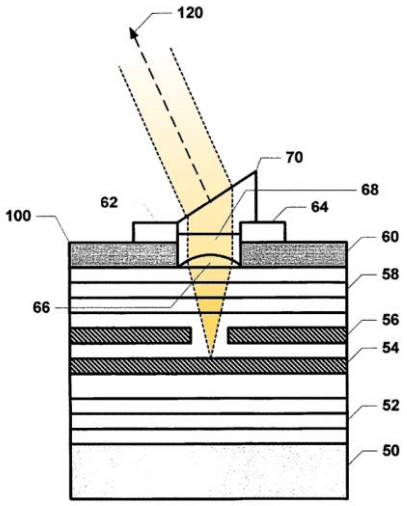

EX1005, FIGS. 4, 6, *see also* 7:61-8:16, 9:12-20. Retterath explains that each emission vector 120 is "on-coincident axis" with a corresponding detection vector 220. For example, Retterath indicates that "[f]or each emitter/detector set of elements 100/200, the emitter and detector vectors are coincident and form a common on-coincident axis that is at an angle relative to a vector normal to the plane of the array that is unique for that emitter/detector set." EX1005, 6:23-39; 10:44-47, 10:66-11:1, 3:1-5, 3:24-26, 3:58-4:34;

g) Claim 45: The optical imaging system of claim 44 wherein the plurality of pixels further includes third and fourth pixels, and the plurality of apertures further includes a third aperture disposed in a third optical path extending between the bulk imaging optic and the third pixel and a fourth aperture disposed in a fourth optical path extending between the bulk imaging optic and the fourth pixel.

173. In the Retterath-Borowski system, each detector element 200 includes a dedicated waveguide 222 that forms an aperture over its respective pixel 224. EX1005, 10:4-30, FIGS. 9-10. Thus, for each detector element 200, an optical path is formed between the bulk imaging optic 230, the aperture 222, and the pixel 224. *Id*. As I discussed previously, Retterath also teaches embodiments where there are first, second, third, and fourth detector elements. *Id*., FIGS. 6, 11b. In these embodiments, the device includes first, second, third, and fourth optical paths, each comprising the bulk imaging optic 230, an aperture 222 (e.g., provided by waveguide 222), and a pixel 224. *Id*.

h) Claim 48: The optical imaging system of claim 44 wherein each pixel in the plurality of pixels is operable to output a signal corresponding to a count of photons incident on the pixel within one sample period.

174. In the Retterath-Borowski combination, each pixel in the plurality of pixels is operable to output a signal corresponding to a count of photons incident on the pixel within one sample period, based on Borowski's suggestions. Detector elements (i.e., pixels 224) are connected to circuitry for "processing the sensed

signal…." EX1005, 12:30-67, FIG. 10. Figures 3 and 14 provide examples of a processing circuit:

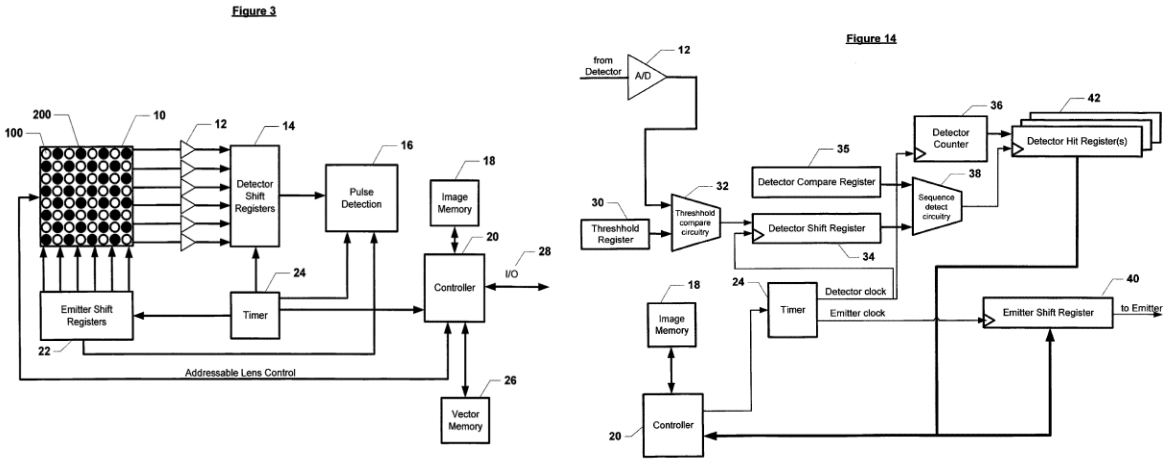

Id., FIGS. 3, 14.

175. Borowski suggests the signal processing circuit to be coupled with the resulting "SPAD" detectors in the combined system and that each pixel—SPAD detector arrays—is operable to output a signal corresponding to a count of photons incident on the pixel within one sample period. For example, Borowski describes photon counting by, e.g., "an analog part 83" in the signal processing circuit of FIG. 11, which "converts the received photons from the photonic part 82 in pulses (Geiger/avalanche mode) that directly trigger the time-to-digital converters." EX1006, FIG. 11, [0223-24, 27-28], [0021], [0034] ("the time of flight of each event detected at each SPAD detector cell is counted from the determined reference time"), [0042] ("the data processing circuits can determine from which pulse a particular photon count results, and use its precise timing to further increase the measurement

precision"), [0062] ("a statistical processing circuit comprising at least one counter of the detected events at the SPAD diode"), [0127], [0192], [0197-98], [0241-42], claim 23. The digital-signal-processing circuitry "allows a SPAD detector cell to process events by detecting a single photon or multiple photons from a given reflected pulse." EX1006, [0051]-[0052], [0035].

i) Claim 50: The optical imaging system of claim 44 wherein the optical imaging system is configured to collect distance data based on recorded times between transmission of beams of electromagnetic radiation emitted from the plurality of emitters and detection of photons originating from the beams of electromagnetic radiation.

176. The LiDAR system uses time-of-flight to measure the distance to objects in the field, which is based on the time between transmission of beams from the emitters and detection of photons by the pixels. EX1005, 11:57-60 ("The detector circuitry and the control unit will determine the distance of the object that reflected the signal by measuring the time of flight of the photons in the emitter pulse sequence."); 14:42-45. Each point measurement provides three-dimensional data: the horizontal and vertical position, which is based on the position and angular orientation of each emitter-detector pair in the array; and distance based on time-of-flight. *Id*., 7:61-8:14, FIGS. 6, 18a; EX1006, [0031], [0048].

B. Ground 1B: Retterath, Borowski, and Weimer Render Obvious Claims 44-48 and 50

177. As I discussed above in Ground 1A, Retterath and Borowski render obvious claims 44, 45, 48, and 50. *See* Section XI.A.1-13. Additionally, each element of these claims is provided by the predictable combination of Retterath in view of Borowski and Weimer. Weimer suggests emitter/detector configurations for systems similar to the Retterath-Borowski combination. Additionally, Weimer describes the use of VCSELs for emitters for such LiDAR systems. EX1008.

178. As I have explained above, *supra* section X.D, similar to Retterath, Weimer is directed to vehicle-based LiDAR devices. EX1008, FIGS. 1A-D, 4:4-6. Weimer notes that "the goal for good daytime performance has been to have the laser spot size only slightly smaller than the receivers instantaneous field of view." *Id*., 1:56-59. To achieve that goal, Weimer describes controlling the emission pattern of individual laser beams to match the field-of-view of a corresponding detector. *Id*., 4:56-58. One example embodiment is shown in Figure 3A, annotated below:

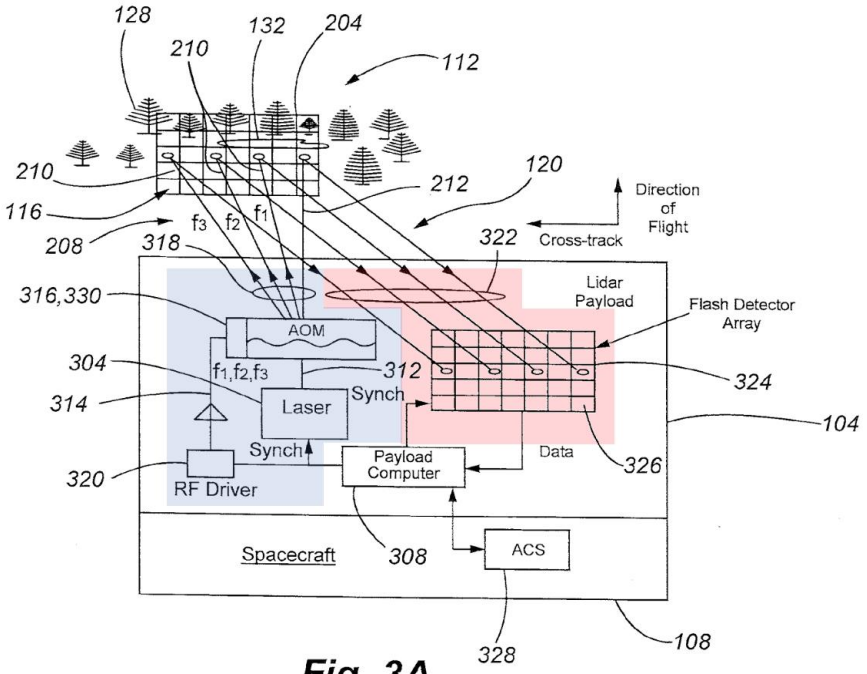

Fig. 3A

Id., FIG. 3A (annotated), 10:17-45. Notably, Weimer explains that the illumination source may include a VCSEL array. *Id*., 9:32-35 ("An example of a light source 304 comprising an array includes a vertical cavity surface emitting laser (VCSEL) configured to provide an array of lasers."), 11:39-41 ("the laser array 306 may comprise a VCSEL array."). Weimer further describes that "individual beams 208 can be directed to cover an area corresponding to a single pixel of the detector." *Id*., 4:56-58.

1. Predictable combination of Retterath, Borowski, and Weimer

179. Based upon my review of the references and my knowledge and experience in this field, it is clear that a POSITA would have found it obvious to combine the teachings of Retterath, Borowski, and Weimer. Multiple reasons would

have prompted a POSITA to implement the Retterath-Borowski combination in accordance with Weimer's suggestions to use VCSEL emitters and to utilize pixels (e.g., SPAD macro-cells), each with a non-overlapping field-of-view beyond a threshold distance and coincident alignment with a corresponding illumination beam from the VCSEL emitter.

180. As a first reason, a POSITA would have been prompted to match the field-of-view of each pixel to the emission region of an emitter, based on Weimer's suggestions, to improve signal to noise (SNR) in the pixel array in the Retterath-Borowski combination. Retterath describes an objective to reduce interference through tightly controlled beam spots and precise alignment of emitters and detectors. EX1005, 9:29-44; 9:59-65, 10:47-49; 11:21-25; FIG. 5a; EX1008, 1:53-61 (describing impact of field of view per detector on SNR), 4:56-58; ; *see also* EX1008, 1:51-53. Based on Weimer's description, a POSITA would have recognized that such an objective would have been furthered by combination with Weimer's teachings.

181. As a second reason, a POSITA would have been prompted to implement Weimer's suggestions in the Retterath-Borowski combination to facilitate a high-resolution point cloud with reduced interference. Based on my knowledge and experience in the field and my review of Retterath, Borowski, and Weimer, a POSITA would have recognized that Weimer's suggested improvement

would have predictably avoided background light and facilitated improved SNR, by controlling the emission pattern of individual lasers to match the field of view of a corresponding pixel, for example. *Id*., 1:56-61, 4:56-58. Moreover, a POSITA would have recognize that such a benefit could have been achieved efficiently through the use of VCSELS, which also improve the power efficiency of the system (e.g., as compared to edge emitters that utilize beam shaping, resulting in wasted power).

182. As a third reason, a POSITA would have been prompted to match utilize VCSEL emitters, based on Weimer's suggestions, in the LiDAR system of the Retterath-Borowski combination to promote precise beam profiles and further enhance SNR. Retterath explicitly describes "vertically-constructed laser diodes." EX1005, 6:15-19 ("Each emitter of emitter elements 100 of emitter/detector array 10 can comprise vertically-constructed laser diodes that can be configured to project beams of light at known angles relative to a vector of the device normal to a plane of the array 10."), 8:20-35 ("Utilizing a vertical transmission layer stack allows for small spacing between individual emitters on a device and allows for simpler optics."); *see also* EX1008, 1:37-40. Based on Retterath's express suggestion, a POSITA would have looked to other references for conventional details on the implementation of vertical laser diodes, such as Weimer. I note that VCSEL emitters

were well-known for their round/Gaussian beam profiles with well-delineated edges that are desirable for such LiDAR applications.

183. As a fourth reason, a POSITA would have been prompted to implement Weimer's suggestions in the Retterath-Borowski combination because doing so was the application of known techniques to a known system ready for improvement to yield predictable results. Weimer suggested the beneficial use of VCSELS and emitter/pixel relationship in a LiDAR system, and Retterath provided a conventional LiDAR system ready for improvement. Moreover, I am confident that a POSITA would have had a reasonable expectation of success in making the combination, especially in view of the similarity of the systems and overlapping nature of these LiDAR teachings.

184. I note that VCSELS were known to be effective in LiDAR systems. *See e.g.*, EX1004, FIGS. 5a, 11b, 11:21-25. Moreover, other publications corroborate the fact that VCSEL emitters had been proven to integrate in emitter arrays of LiDAR systems, like the Retterath-Borowski combination, before September 2015. *See e.g.*, EX1016, 4:55-62; EX1017, 4:51-5:21. For example, the Tan publication corroborates the fact that a POSITA would have understood numerous benefits of VCSEL emitters and arrays, including:

- "VCSELs[] are particularly useful for the disclosed lidar applications because they have a small angular divergence and emit light normal to the surface of the wafer in which they are fabricated."
- "VCSELs … allow for fabrication of integrated one-dimensional or two-dimensional laser arrays with close device spacing…."
- VCSELs "emit circularly symmetric Gaussian beams, as compared to highly eccentric elliptical beams of edge emitting lasers."
- "VCSELs can be fabricated with relatively small active areas, they can be activated quickly, *e.g.*, on the order of picoseconds."
- "The inherently integrated nature of VCSEL arrays provides additional opportunities to integrate optics…. This allows for simpler lidar device manufacturing and reduction in overall device complexity and cost."

EX1017, 4:51-5:21.

185. These advantages were known long before the priority date of the '750 Patent, and a POSITA would have understood that the advantages were directly applicable to a LiDAR device like that of the Retterath-Borowski combination (as suggested by Weimer).

186. I note additionally that the individual VCSELs would have been positioned vertically, with their emission surface facing the bulk optic 80, and mounted on a common substrate, as taught in Retterath. The individual VCSELs

would operate in the same manner in the resulting system, like they were in Weimer's disclosure. *See e.g.*, EX1005, FIGS. 6, 10, 11b; EX1013, [0013], FIG. 2.

2. Elements 44(c) and 44(f)

187. Element 44(c) recites, in part, "each pixel in the plurality of pixels comprises a plurality of single photon avalanche diodes (SPADs) and has a field of view that is non-overlapping beyond a threshold distance in a field external to the optical imaging system with fields of view of all other pixels in the plurality of pixels." Element 44(f) recites, in part, "electromagnetic radiation output from each emitter in the illumination pattern is coincident with a field of view of a corresponding pixel in the plurality of pixels." Based upon my review of the references and my knowledge and experience in this field, it is clear that the predictable Retterath-Borowski-Weimer combination provides each of these Elements.

188. The resulting device would include a plurality of pixels, each with a non-overlapping field-of-view and coincident alignment with a corresponding illumination beam, based on Weimer's suggestions. As I discussed above, Weimer describes an optical system comprising a laser array 306 with multiple laser sources configured to project beams 208 into the field. EX1008, FIG. 3D, 11:29-48. The laser array 306 includes a "VCSEL array" of "multiple lasers." EX1008, 11:35-46.

In one embodiment, the individual beams 208 have discrete, non-overlapping emission regions as shown in FIG. 2A:

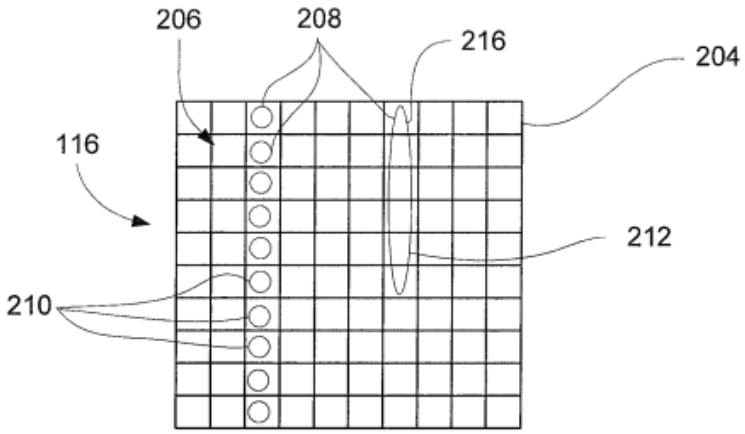

Fig. 2A

Id., FIG. 2A.

189. Weimer further describes a pixel array 324 in which each pixel 326 has a field-of-view that matches a corresponding beam 208 from the illumination source. *Id*., FIG. 3A, 10:17-45. In this regard, Weimer teaches "individual beams 208 can be directed to cover an area corresponding to a single pixel of the detector." *Id*., 1:56-59, 4:56-58; *see also* 3:55-5:12, 5:13-7:16, 7:17-8:47, 8:48-10:45, FIGS. 2B-4. For example, the configuration can provide a "laser spot size only slightly smaller than the receivers instantaneous field of view." *Id.*

190. When the teachings of Retterath, Borowski, and Weimer are combined, the resulting device would include emission regions of individual beams 210 that are non-overlapping beyond a threshold distance corresponding to the target scene. *Id*.,

FIG. 2A, 4:40-58; 10:3-16. Relatedly, the fields-of-view for the plurality of pixels are non-overlapping at the same distance, because the field-of-view for an individual pixel is matched to the size of the emission region for an individual beam, based on Weimer's suggestions.

3. Claim 46: The optical imaging system of claim 44 wherein the plurality of emitters comprises a plurality of vertical-cavity surface-emitting lasers (VCSELs).

191. Based upon my review of the references and my knowledge and experience in this field, it is clear that the Retterath-Borowski-Weimer combination provides the additional element of claim 46. Weimer teaches a laser array 306, which "may comprise a VCSEL array" of "multiple lasers." EX1008, 11:35-46. When combined with the teachings of Retterath, each emitter in the array would comprise a VCSEL, and the emitters could be optionally mounted on a common substrate, based on Weimer's suggestions. EX1005, 11:21-25, FIG. 11b; *supra* §§XI.A.1-2.

4. Claim 47: The optical imaging system of claim 46 wherein each emitter in the plurality of emitters comprises a single VCSEL.

192. The Retterath-Borowski-Weimer combination also provides the additional element of claim 47. Weimer teaches a single VCSEL for each optical emitter of the plurality optical emitters on the LiDAR device of the Retterath-Borowski combination. *Supra*, §§XI.D.1-2;

C. Ground 1C: Retterath, Borowski, and Hipp Render Obvious Claims 44, 45, 48, and 50

193. As I discussed above in Ground 1A, Retterath and Borowski render obvious claims 44, 45, 48, and 50. *See* Section XI.A. In particular, Retterath teaches the limitations directed to an aperture layer with a plurality of apertures separated by a stop region. *Id*. These claims are additionally provided by the predictable combination of Retterath, Borowski, and Hipp.

194. Similar to Retterath and Borowski, Hipp describes a LiDAR system that uses emitters and detectors for a time-of-flight calculations. *Supra* X.A, B, E; EX1007, 5:19-56; 21:14-67. Hipp suggests the use of a conventional aperture layer provided by a "shadow mask" including a plurality of apertures formed over pixels in a detector array and a stop region formed between adjacent apertures to block undesired light from reaching the pixels. EX1007, 21:57-67 ("shadow mask … designed such that only that light is transmitted which would also be incident on the active zones of the APDs").

195. The mask is made of opaque material and formed as a thin layer printed on the surface of array. *Id*., 21:60-67 ("The remaining light can be avoided in that the shadow mask is mirror coated superficially, with it thus being achieved that the unwanted light does not enter into the region of the active zones at all or in that the

shadow mask is printed onto the cover plate of the APD array or onto an APD with impermeable material."), FIG. 16.

1. Predictable combination of Retterath, Borowski, and Hipp

196. Based on my knowledge and experience in the field, and my review of Retterath, Borowski, and Hipp, it is clear that a POSITA would have been prompted to implement an aperture layer, based on Hipp's suggestion of a shadow mask, over the SPAD detector array of the Retterath-Borowski combination, as I discussed above. A POSITA would have recognized that doing so would have provided known benefits. In the resulting combination, each of the apertures (i.e., pinholes) would have been aligned with a corresponding one of the Retterath-Borowski pixels:

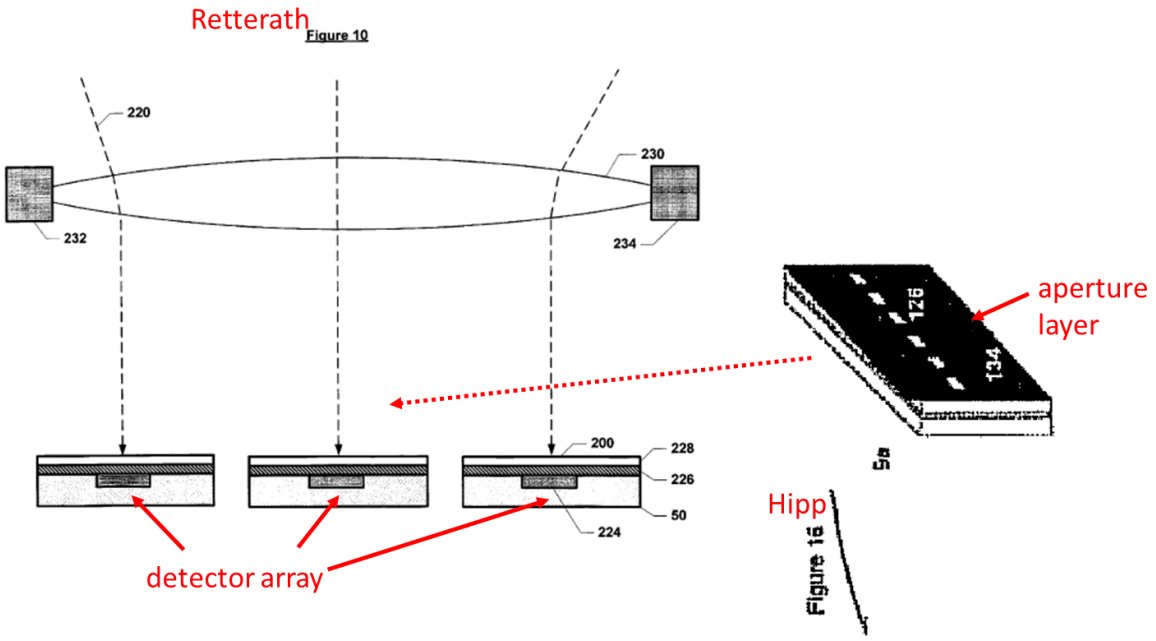

EX1005, FIG. 10; Ex.1007, FIG. 16 (annotated)

197. Retterath describes tightly controlled beam spots and precise alignment of emitters and detectors. EX1005, 9:29-44, 9:59-65, 10:47-49. Hipp suggests a shadow mask to avoid interference between pixels in a detector array. EX1007, 21:57-67. Based on Hipp's description, a POSITA would have readily recognized that the shadow mask of Hipp provides an enhanced mechanism to block unintended photons from reaching a pixel. I note that Hipp's suggestions thus complement Retterath, and further an express objective described by Retterath. EX1005, 9:41-59 ("reduce or remove crosstalk with detectors"). Based on my review of Retterath, Borowski, and Hipp, and my knowledge and experience in the field, a POSITA would have implemented a shadow mask based on Hipp's suggestions together with Retterath's macro detector lens 230, in addition or as an alternative, to a waveguide, to achieve such known benefits, as I discuss in more detail below.

198. Based on my knowledge and experience in the field, and my review of Retterath, Borowski, and Hipp, multiple reasons would have motivated a POSITA to implement the Retterath-Borowski combination to use an aperture layer, based on Hipp's suggestions.

199. As a first reason, a POSITA would have been motivated to combine Hipp with the Retterath-Borowski combination to further Retterath's objective of reduced cross-talk among the pixels of the LiDAR system. Hipp's shadow mask was designed to address signal interference, which was known to be a concern in

multi-beam LiDAR devices. EX1007, 21:46-56. For example, Hipp explains that "interference pulses arise which superimpose themselves with the desired signals which is a basic problem of the array technique." *Id*. A POSITA would have recognized, from Hipp's explicit discussion, that the shadow mask solves that problem "such that only that light is transmitted which would also be incident on the active zones." *Id*., 21:57-67. Notably, Hipp additionally explains that "remaining light can be avoided" such that "the unwanted light does not enter into the region of the active zones at all…." *Id*., 21:60-67.

200. As a second reason, a POSITA would have been prompted to implement Hipp's suggestion with the Retterath-Borowski combination because doing so—especially by the relatively late time frame leading up to September 2015—was the application of known techniques to a known system ready for improvement to yield predictable results. Retterath provided a LiDAR system having an array of detectors that was ripe for the added benefits articulated above, and Hipp expressly suggested a shadow mask in such systems utilized to reduce interference.

201. Moreover, especially in view of the similarity of the systems and the overlapping teachings in these LiDAR-related references, a POSITA would have readily implemented a shadow mask based on Hipp's suggestions, with a reasonable

expectation of success, in the LiDAR system of the Retterath-Borowski combination.

2. *Element 44(d): an aperture layer disposed between the bulk imaging optic and the plurality of pixels, the aperture layer comprising a plurality of apertures separated from each other by a stop region, the plurality of apertures including a first aperture disposed in a first optical path extending between the bulk imaging optic and the first pixel and a second aperture disposed in a second optical path extending between the bulk imaging optic and the second pixel*

Claim 45*: *The optical imaging system of claim 44 wherein the plurality of pixels further includes third and fourth pixels, and the plurality of apertures further includes a third aperture disposed in a third optical path extending between the bulk imaging optic and the third pixel and a fourth aperture disposed in a fourth optical path extending between the bulk imaging optic and the fourth pixel

202. The Retterath-Borowski-Hipp combination provides Element 44(d) and the added limitation of claim 45.

203. Hipp describes an aperture layer in the form of a "shadow mask" comprising a plurality of apertures (e.g., pinholes) formed over pixels in a detector array and separated by a stop region where photons are blocked. EX1007, 21:57-67 ("shadow mask … designed such that only that light is transmitted which would also be incident on the active zones [of detector array]"); *see also*, FIG. 16 (dark area on shadow mask 134); 22:1-23:15, 23:16-24:20, 27:5-28:3, FIG. 17.

204. In the Retterath-Borowski-Hipp combination, the shadow mask, in accordance with Hipp, includes at least four apertures (pinholes), each formed over

a respective pixel of the SPAD array such that a respective optical path extends between the bulk imaging optic (i.e., macro lens 230) and the respective pixel (e.g., SPAD macro-cell) through the respective aperture (i.e., pinhole). EX1007, 21:57-67; *supra*, Sections XI.A (analysis of claim 45), XI.B.1.

D. Ground 1D: Retterath, Borowski, Weimer, and Hipp Render Obvious Claims 44-48, 50

205. As I discussed above in Ground 1B, Retterath, Borowski, and Weimer render obvious claims 44, 45, 48, and 50. *See* Section XI.B. Even if the Retterath-Borowski-Weimer combination did not provide all elements of claims 44, 45, 48, and 50 (which it does), the predictable combination of Retterath-Borowski-Weimer-Hipp would do so. *See* Section XI.B.1 (Ground 1B). Here again, based on my knowledge and experience in the field, and my review of these references, a POSITA would have been motivated to combine the teachings of Retterath, Borowski, Weimer, and Hipp with a reasonable expectation of success, for the reasons and known benefits I detailed above in Sections XI.B.1-4 and XI.C.1-2.

E. Ground 2 – Claims 44-48, 50 are obvious based on Imai, Higashi, and Grzesik

206. Based upon my review of the references and my knowledge and experience in this field, it is clear that the Imai-Higashi combination renders obvious claims 44-48, 50.

207. As I discussed previously (refer to, *supra*, §§X.F &G), Imai describes a LiDAR system utilizing a "SPAD (single photon avalanche diode)" as light receiving elements "for measuring time (measuring distance)" because "SPAD having a higher sensitivity than that of the PD are advantageous in detection accuracy and detection distance." EX1009, [0048]. Higashi discloses a similar LiDAR system with each detector element ("pixel") advantageously including multiple SPADs. EX1011, FIG. 4, [0027].

1. Predictable combination of Imai and Higashi

208. Based on my knowledge and experience in the field, and my review of Imai and Higashi, a POSITA would have been motivated to implement Higashi's suggestions in Imai's system. Significantly, a POSITA would have been prompted to implement a conventional multi-SPAD pixel, based on Higashi's suggestions, to achieve a number of known advantages (refer to ¶¶209-211 below). Imai disclosed the use of multiple SPAD cells for each detector pixel, as I discuss in more detail below, but even if Imai did not, such a configuration would have been readily recognized in view of Higashi. In the combined system, multiple SPADs (e.g., four SPADs) would be utilized in each "PD" of Imai, based on Higashi's suggestion. EX1009/EX1027, FIG. 11; EX1011, FIG. 4. An example of such a configuration is shown in the annotated FIGS. Below, in which each of Imai's 16 pixels include multiple SPADs.

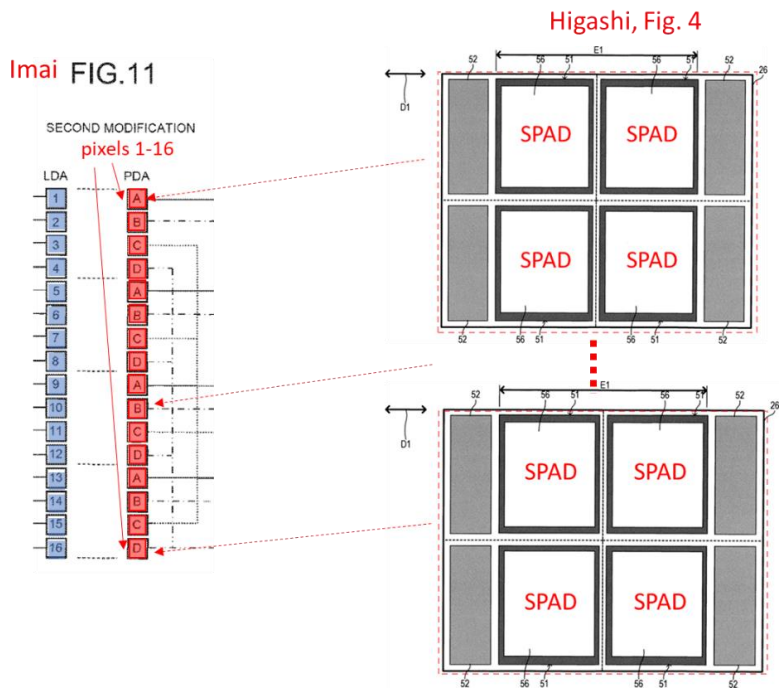

EX1009, FIG. 11, EX1011, FIG. 4 (annotated))

209. Based on my review of Imai and Higashi, multiple reasons would have motivated a POSITA to implement Higashi's suggested improvements in Imai's system. As a first reason, a POSITA would have been motivated to arrange multiple SPADs in each of Imai's detector pixels (e.g., pixels 1-16 in Imai's FIG. 11) so that "erroneous detection of pixels[] can be reduced" and improved accuracy is achieved. EX1011, [0071]-[0072]. Based on my knowledge and experience in the field, a POSITA would have recognized, based on Imai and Higashi, that doing so would have further improved Imai's objective of achieving "higher sensitivity." EX1009, [0048] ("("SPAD having a higher sensitivity than that of the PD are advantageous in detection accuracy and detection distance"). Higashi's suggested solution would

have predictably provided such benefits to Imai's system while also accounting for characteristics of SPADs. EX1011, [0075] ("there is a possibility that it will respond even if no light is incident, and there is a possibility that it will not respond even if light is incident."), FIG. 4. In fact, the known benefits include smart averaging of multiple SPADs as elaborated in EX1006, which I explained above in Section X.B.

210. As a second reason, a POSITA would have been motivated to implement Higashi's suggestion of multiple SPADs within each of Imai's detector pixels to promote uninterrupted performance of each pixel even when an individual diode is quenched, such as from errant photon or otherwise not resetting. Such a multi-SPAD pixel configuration would have provided for continued detection even if one pixel is quenching, promoting detection accuracy. For example, as Higashi indicates, when such a configuration is utilized, the "possibility of erroneous detection" at "the same time is low." *See e.g.*, EX1011, [0071]. I additionally note that a POSITA would have recognized that doing so would have further Imai's stated objective of "inhibiting the increase of detection obtaining time." EX1009, [0006]-[0007]. This is because multi-SPADs facilitate high speed data processing as the multiple SPADs take turns to receive the incoming photons.

211. As a third reason, a POSITA would have been motivated to implement Imai's system using Higashi's suggested improvements because doing so was simply the application of known techniques to a known system ready for

improvement to yield predictable results, and to provide benefits as I discussed above. Higashi suggested the techniques of multi-SPAD pixels and bandpass filters in a LiDAR system, and Imai describes a LiDAR system that utilized SPAD detectors ready for improvement. Given the similarity and overlapping teachings of Imai and Higashi, a POSITA would have had a reasonable expectation of success in making the proposed combination. I note that this is especially the case because both Imai and Higashi already contemplate multiple subpixel elements for each detector pixel, because Higashi provided additional implementation details of a readout circuit for each multi-SPAD pixel, and because Higashi describes the performance benefits of a bandpass filter. EX1011, FIG.5, [0031-40], [0086]. Based on my knowledge and experience in the field, implementing bandpass filters and multi-SPAD detector pixels was known and a commonly suggested technique for a variety of LiDAR systems at the time. *See e.g.*, EX1006, Abstract ("set of SPAD detector arrays"); [0003]; [0014]; [0045] ("bandpass filters"); [0154] and EX1029, [0062].

2. Predictable combination of Imai, Higashi, and Grzesik

212. Based on my review of Imai, Higashi, and Grzesik, multiple reasons would have prompted a POSITA to implement an aperture layer, based on Grzesik's suggestions of a cross talk absorption layer, in the Imai-Higashi combination (detailed above in Section XI.E.1).

213. As a first reason, a POSITA would have been motivated to implement an aperture layer, based on Grzesik's suggestions, between the imaging forming optical system and the SPAD pixels of the Imai-Higashi combination to reduce optical cross talk. For example, Grzesik indicates that the "blanket-coating material regions 64 of the cross talk absorption layer 60 at least partially suppress … the internal reflection of secondary radiation … while the apertures 62 allow transmission of primary external photons … to photodiodes in the photodiode array." EX1012, [0033]. A POSITA would have been motivated to avail the Imai-Higashi system of this benefit. Moreover, I note that Imai expressly indicates an objective of improving resolution in a detection range in a sub-scanning direction. EX1009, [0006]-[0007]. This would have been furthered by Grzesik's suggestion of an aperture layer to reduce cross talk interference between pixels because more pixels can be used in a specified detection area, for example.

214. As a second reason, a POSITA would have been motivated to implement Grzesik's suggestion with the Imai-Higashi combination because doing so was the application of known techniques to a known system ready for improvement to yield predictable results having benefits I discussed above. Grzesik suggested improvement for a cross talk absorption layer to reduce secondary detection and Imai-Higashi provide a LiDAR system ready for improvement. For at least the reasons described above, and given the similarities of the systems and the

overlapping teachings, a POSITA would have readily implemented Grzesik's suggestions in Imai-Higashi, and had a reasonable expectation of success in doing so. This is especially the case because Grzesik demonstrates the known benefits of implementing a cross talk absorption layer disposed on the detector array, with apertures of the cross talk absorption layer aligned with individual detectors, and describes using its cross talk absorption layer on Geiger-mode APDs (e.g., SPADs), similar to the Imai-Higashi system. EX1009, FIG. 3, [0003].

3. Claim 44

a) Element 44(a): An optical imaging system comprising:

215. The Imai-Higashi-Grzesik combination provides the recited system of element 44(a).

216. As I have explained above, *supra* §§X.F&G, XI.E.1, Imai describes a "scanning laser radar" for "emitting light and detecting a distance to the object by … receiving reflected light (scattered light) from the object:"

> The laser radar 100 is a scanning laser radar mounted on an automobile as a mobile object for detecting whether there is an object (for example, a preceding vehicle, a stopping vehicle, an obstacle, a pedestrian and the like) by emitting light and detecting a distance to the object and the like by receiving reflected light (scattered light) from the object, as an example.

EX1009, [0027], FIG. 1, [0029-30], [0032]-[0039], [0040], [0041]-[0047], [0051-54], [0086], [0101], [0115]; EX1011, FIG. 1, [0015] (similar system); EX1027,

[0017]; [0028]; [0053]; [0041]-[0048];; FIGS. 4A, 5, 7.

b) Element 44(b): a bulk imaging optic;

217. The Imai-Higashi-Grzesik combination provides a bulk imaging optic.

218. As I have explained above, *supra* §§X.F&G, XI.E.1, Imai describes a bulk imaging optic provided by an imaging lens on the light receiving optical system 30, as shown in Imai's FIG. 2C. EX1009, FIG. 2C (annotated below), [0039]-[0041]; EX1027; [0019]-[0022].

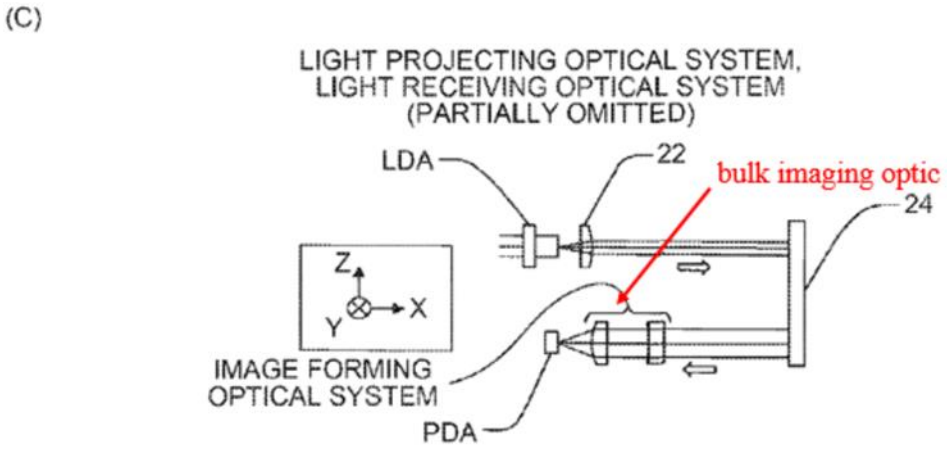

c) Element 44(c): a plurality of pixels arranged behind the bulk imaging optic, wherein each pixel in the plurality of pixels comprises a plurality of single photon avalanche diodes (SPADs) and has a field of view that is non-overlapping beyond a threshold distance in a field external to the optical imaging system with fields of view of all other pixels in the plurality of pixels, and wherein the plurality of pixels includes at least a first pixel and a second pixel;

219. The Imai-Higashi-Grzesik combination provides element 44(c) in at least two independent manners. *Supra* §§X.F&G, XI.E.1.

220. In a first manner that the Imai-Higashi-Grzesik combination provides element 44(c), Imai teaches that each photo diode (PD) can be in the form of "a SPAD" ([0048]), and Imai's embodiment shown in FIG. 10 plainly depicts that each detector pixel includes four such PD elements. In particular, Pixel 1 includes PD1-PD4, Pixel 2 includes PD5-PD8, Pixel 3 includes PD9-PD12, and Pixel 4 includes PD13-PD16. EX1009, [0096]-[0098]; FIG. 10. These four pixels, each including four PD elements, are annotated here in FIG. 10:

FIG.10

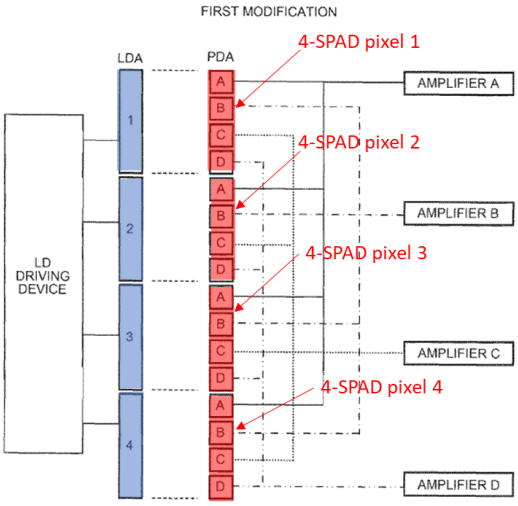

EX1009, FIG. 10 (annotated)

221. Based upon my review of the references and my knowledge and experience in this field, it is clear that a POSITA would have readily recognized, from Imai's description, that its system includes four pixels, with each pixel including four SPADs. I note that the four pixels, including all of the detector elements PD1-PD16 in the array (PDA), are arranged behind the lens of the image

forming system, as shown in FIGS. 2C and 4B, for example. *See also*, EX1009, FIG. 2B, [0037]-[0041] and [0061].

222. Each 4-SPAD pixel has a field of view that is non-overlapping beyond a threshold distance in a field external to the optical imaging system with fields of view of all other pixels in the plurality of pixels. For example, in FIG. 10, Imai also shows four LDs—LD1 to LD4—that correspond to the four respective groups of PDs. Imai states: "An irradiation range of the LD1 corresponds to light receivable ranges of the PD1 to PD4, the irradiation range of the LD2 corresponds to the light receivable ranges of the PD5 to PD8, the irradiation range of the LD3 corresponds to the light receivable ranges of the PD9 to PD12, and the irradiation range of the LD4 corresponds to the light receivable ranges of the PD13 to PD16." EX1009, [0099]. Thus, "light from the LD1 is received by the PD1 to PD4, the light from the LD2 is received by the PD5 to PD8, the light from the LD3 is received by the PD9 to PD12, and the light from the LD4 is received by the PD13 to PD16." *Id.*, [0100]; FIG. 10 (annotated above). I note that Imai's configuration here again is like the embodiment described by the '750 patent, which describes that "each illuminating beam projected from the bulk transmitter optic into the field intersects and is of substantially the same size and geometry as the field of view of the corresponding sense channel." EX1001, 5:17-34, 11:16-19. Thus, to the extent the Patent Owner contends this explanation in the '750 patent describes the "non-overlapping"

recitation in this claim, then Imai likewise discloses this feature was known. EX1009, [0099] ("corresponds to"), [0100], [0101] ("slightly larger than corresponding light receiving ranges of the four PDs"), FIG. 10.

223. Additionally, as detailed below for Element 44(d), the predictable combination would have been implemented such that each of Imai's pixels is aligned with an corresponding aperture of the aperture layer (as suggested by Grzesik), thereby further isolating each pixel and ensuring that the field-of-view for each pixel in the resulting combination is "non-overlapping" as recited in this claim.

224. Imai also describes that each SPAD pixel detects photons emitted from its corresponding LD and received through the bulk imaging optic after being reflected from surfaces within the field. For example, Imai discloses sequentially activating each LD and detecting scatted light on each corresponding pixel (i.e., group of detectors). *Id.*, [0077] ("Then, the LD1 is turned on and reflected light is detected by the corresponding PD1 to PD4. Next, the LD2 is turned on and the reflected light is detected by the corresponding PD5 to PD8. Next, the LD3 is turned on and the reflected light is detected by the corresponding PD9 to PD12. Next, the LD4 is turned on and the reflected light is detected by the corresponding PD13 to PD16. Meanwhile, the four PDs of PD1, PD5, PD9, and PD13 of the PD group A are connected to the amplifier A. The four PDs of PD2, PD6, PD10, and PD14 of the PD group B are connected to the amplifier B. The four PDs of PD3, PD7, PD11,

and PD15 of the PD group C are connected to the amplifier C. Each amplifier is connected to a PD output detecting unit 44. Then, an output signal of each PD is amplified by the corresponding amplifier to be transmitted to the PD output detecting unit 44.”). “As a result, distance data corresponding to one column in the sub-scanning direction [Z-direction in FIG. 6] may be obtained.” *Id.*, [0109] (“obtain the distance data of high resolution in the sub-scanning direction at high speed … obtain the distance data of 16 resolution in the sub-scanning direction”), [0110-12]; EX1027, [0018]-[0022]; [0041]-[0042]; [0077]-[0082]..

225. In a second manner, the Imai-Higashi-Grzesik combination provides Element 44(c) based on Imai’s embodiment shown in FIG. 11 and Higashi’s suggestion of using multiple SPADs at each detector pixel. As I discussed above, *supra* §§XI.E.1-2 and annotated below, a POSITA would have been motivated to implement Imai, based on Higashi’s suggestion, to include a multi-SPAD array for each of the 16 pixels arranged behind the bulk imaging optic. EX1009, FIG. 11; EX1011, FIG. 4. Doing so would have achieved the known benefits noted in Higashi and articulated above. *Id.*; *supra* XI.A.1.

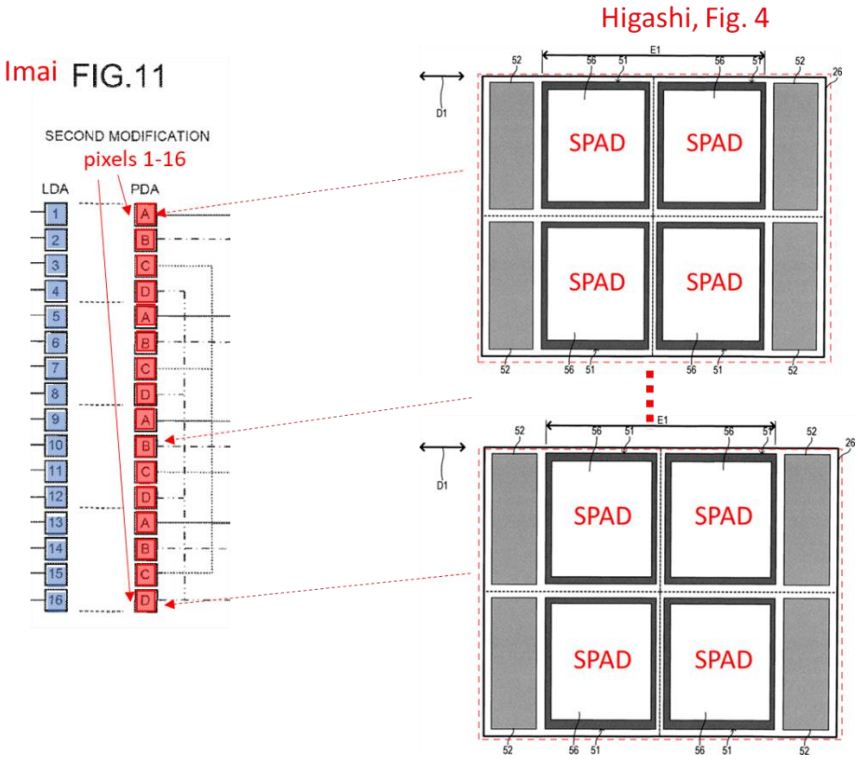

EX1009, FIG. 11(partial), EX1011, FIG. 4 (annotated)

226. Each pixel (pixels 1-16) has a field of view that is non-overlapping beyond a threshold distance in a field external to the optical imaging system with fields of view of all other pixels in the plurality of pixels. For example, Imai expressly indicates that, not only are "the number" of LDs and that of PDs in FIG. 11 the same, but also that "the LDs and PDs ***one-to-one correspond to each other***." EX1009, [0125] ("Herein, the number of LDs and that of PDs are the same and the LDs and PDs one-to-one correspond to each other."). Indeed, a POSITA would have recognized from Imai's description at paragraph [0125] that 1) the number of LDs and PDs "are the same" (e.g., 16 and 16), and 2) the LDs and PDs "one-to-one

correspond to each other," indicating a field of view that is "non-overlapping" so as to correspond to a single other LD.

227. I note additionally that, based on my review of Imai and Higashi, a POSITA would have been motivated to implement the 16 PDs to each have non-overlapping fields of view such that they each correspond to a particular LD. For example, regarding the "relationship between the irradiation range of each LD on the LDA and the light receivable range of each PD of the PDA," Imai describes examples of the correspondence between the light receivable range of a pixel (e.g., a PD) and the emission region of a corresponding emitter (LD). *See e.g.*, EX1009, [0062-64] (discussing "light receivable range of each PD" and "the corresponding irradiation ranges of [emitters]") in FIG. 5), [0067-70] (discussing FIGS. 7A and 7B depict "irradiation areas of [emitters] correspond to a light receivable range of [a corresponding PD]")). With reference to FIGS. 7A and 7B, Imai discusses potential tradeoffs between different ranges of the LDs and PDs, noting considerations of detection time versus detection distance. *See e.g.*, EX1009, [0067-70]. A POSITA would have found it obvious to implement the LDs and PDs to have a one-to-one correspondence such that each of the pixels 1-16 were coincident with a corresponding one of the LDs in order to provide a balanced tradeoff of detection time and detection distance. *Id.* A POSITA would have recognized each of pixels 1-16 in the Imai-Higashi system has a light receivable range matched with the

irradiation area of a corresponding LD so that light emitted by the corresponding LD is received by the matching pixel. And here again, as noted below in my analysis Element 44(d), the predictable combination would have been implemented such that each of the pixels is aligned with an corresponding aperture of the aperture layer (as suggested by Grzesik), which would further isolate each pixel and ensuring that the field-of-view for each pixel in the resulting combination is "non-overlapping" as recited in this claim.

228. As a result, the SPADs for each of the pixels in the array (PDA) are operable to detect photons emitted from its corresponding/paired optical emitter and received through the bulk imaging optic (after being reflected from surfaces within the field). *See e.g.*, EX1009, FIGS. 4B and 2B-C, [0037]-[0041] and [0061]; EX1027, [0018]-[0022]; [0043]-[0053], [0106]; *supra* §§X.F&G, XI.E.1.

d) Element 44(d): an aperture layer disposed between the bulk imaging optic and the plurality of pixels, the aperture layer comprising a plurality of apertures separated from each other by a stop region, the plurality of apertures including a first aperture disposed in a first optical path extending between the bulk imaging optic and the first pixel and a second aperture disposed in a second optical path extending between the bulk imaging optic and the second pixel;

229. The predictable Imai-Higashi-Grzesik combination provides Element 44(d). Grzesik describes an aperture layer provided by a "cross talk absorption layer" comprising a plurality of apertures formed over pixels in a detector array and

separated by a stop region ("surfaces 64") where photons are blocked. EX1012, FIG. 3, [0033]. As I have explained above, in the resulting combination, *supra* §§X.F-H, XI.E.1-2, the aperture layer, based on Grzesik's suggestions, would have been predictably positioned between the imaging forming optical system and the multi-SPAD pixels of the Imai-Higashi combination in order to achieve the cross talk reduction benefit and other known benefits articulated above.

230. Indeed, the plurality of apertures include a first aperture disposed in a first optical path extending between the imaging lens and the first pixel and a second aperture disposed in a second optical path extending between the imaging lens and the second pixel. EX1012, 4:53-5:32, FIG. 3. For example, the aperture layer suggested by Grzesik includes at least four instances connoted as "apertures 62," each formed over a respective pixel of the SPAD array such that a respective optical path extends between the bulk imaging optic (i.e., image forming optical system) and the respective pixel (e.g., SPAD macro-cell) through the respective instance of aperture. *Supra*, §§X.H, XI.E.1-2.

e) Element 44(e): a bulk transmitting optic disposed adjacent to the bulk imaging optic; and

231. The Imai-Higashi-Grzesik combination provides Element 44(e).

232. As I explained above, *supra* §§X.F&G, XI.E.1, Imai describes "a coupling lens 22 arranged on an optical path of the light from the LDA." EX1009,

[0032], FIG. 2A (annotated below). The "coupling lens" described by Imai is like the bulk transmitting optic described by the '750 patent. Both the coupling lens 22 of Imai and the bulk transmitting optic of the '750 patent receive light from multiple emitters (e.g., LDA) and transmit it to the surrounding environment. *Id.*; EX1001, FIG. 1. I note that Imai expressly indicates that "the light emitted from the LDA is shaped into the light having a predetermined beam profile by the coupling lens 22[sic], and then reflected by the reflecting mirror 24 to be deflected about a Z-axis by the rotary mirror 26" to become "the light emitting from the laser radar 100." EX1009, [0033-34].

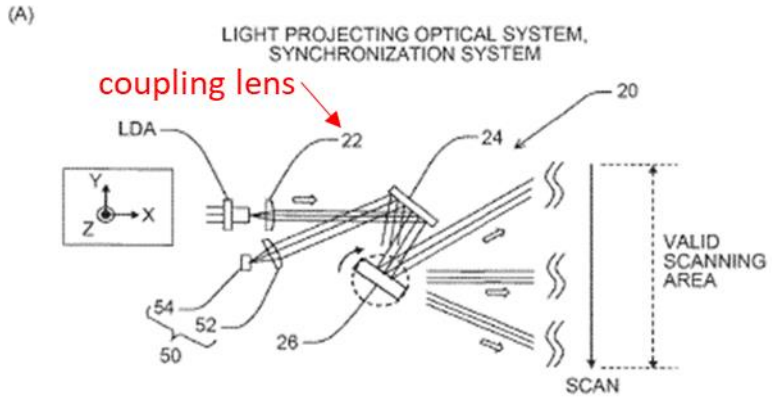

EX1009, FIG. 2A(annotated)

233. As depicted below in Imai's FIG. 2C, coupling lens 22 of the projection optical system 20 and imaging lens on the light receiving optical system 30 are adjacent to each other along the "Z-axis" direction. EX1009, FIG. 2C (annotated below). Imai's arrangement is similar to the embodiment of the '750 patent, which describes "the bulk transmitting optic is adjacent and offset laterally and/or vertically

from the bulk imaging optic". *Compare*, EX1009, FIG. 2C *with* EX1001, 11:11-13, FIGS. 1-2; *see also* EX1009, [0041] (both bulk optics are adjacent to and face toward the same mirror 24 "to obtain the compact device"), [0038]-[0039]; EX1027, [0013]-[0022].

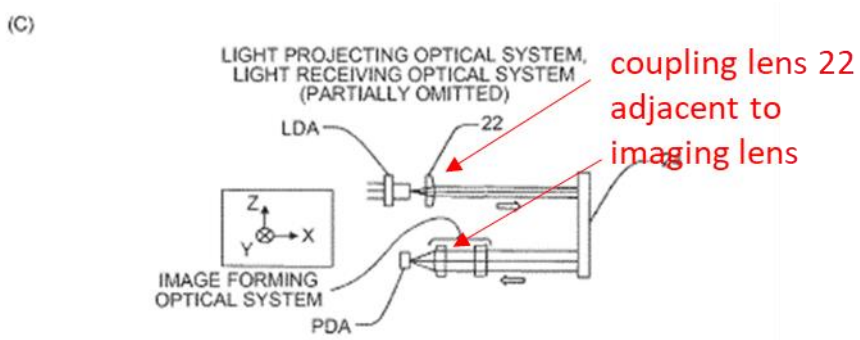

EX1009, FIG. 2C.

234. Based on my review, this "adjacent to" relationship of bulk transmitting and imaging optics was conventional and ubiquitous in such LiDAR devices before September 2015. As previously explained, multiple publications corroborate this fact, such as Pacala, Spies-041, and Spies-977. EX1013, FIG. 2, EX1031, FIG. 6, EX1033, FIGs. 1-2.

f) Element 44(f): a plurality of emitters arranged to project electromagnetic radiation through the bulk transmitting optic and into the field according to an illumination pattern where electromagnetic radiation output from each emitter in the illumination pattern is coincident with a field of view of a corresponding pixel in the plurality of pixels.

235. The Imai-Higashi-Grzesik combination provides Element 44(f).

236. As I explained above, *supra* §§X.F&G, XI.E.1, Imai teaches a plurality of optical emitters. For example, Imai describes the "laser radar 100 is provided with an LDA (laser diode array) including a plurality of LDs (laser diodes) as a light source." EX1009, [0029]. Imai's laser diodes are arranged behind the coupling lens 22 and project light through the coupling lens 22 into a field external to the optical system. EX1009, [0032-34] ("the light emitted from the LDA is shaped into the light having a predetermined beam profile by the coupling lens 22[sic]" to subsequently become "the light emitting from the laser radar 100."), [0036], [0047], [0060], [0066]-[0083], [0085], FIGS. 2A, 4A, 5-7; *supra* 1(b). To be clear, a POSITA would have understood that the projected light from the LDA of Imai is a form of electromagnetic radiation at an operating wavelength.

237. Imai describes the output from each emitter in the illumination pattern is coincident with a field of view of a corresponding pixel in the plurality of pixels, in at least two manners. As I discussed above regarding Element 44(c), i<u>n the first manner</u>, Imai describes in connection with FIG. 10 that "[a]n irradiation range of the LD1 corresponds to light receivable ranges of the PD1 to PD4, the irradiation range of the LD2 corresponds to the light receivable ranges of the PD5 to PD8, the irradiation range of the LD3 corresponds to the light receivable ranges of the PD9 to PD12, and the irradiation range of the LD4 corresponds to the light receivable ranges of the PD13 to PD16." EX1009, [0099]; FIG. 10. The "light from the LD1 is

received by the PD1 to PD4, the light from the LD2 is received by the PD5 to PD8, the light from the LD3 is received by the PD9 to PD12, and the light from the LD4 is received by the PD13 to PD16." *Id.*, [0100]. "The irradiation range of each LD is set to be slightly larger than corresponding light receiving ranges of the four PDs." *Id.*, [0101]; FIG. 10 (annotated above). As discussed above (e.g., Element 44(d), further isolating each pixel would have beneficially maintained each pixel's field of view to be coincident with the laser of its corresponding LD. I note that Imai's configuration described here is like the detailed embodiment described by the '750 patent. EX1001, 5:2-34; 11:16-19. Imai also teaches that each SPAD pixel detects photons emitted from its corresponding LD and received through the bulk imaging optic after being reflected from surfaces within the field. EX1009, [0077]; [0109]; [0110-12].

238. As I discussed previously in conjunction with Element 44(c), <u>in the second manner</u>, each pixel (pixels 1-16, Imai's FIG. 11) has a field of view coincident with an emission region of a corresponding LD in the LDA (LD1 to LD16). Imai explicitly states that, not only are "the number" of LDs and that of PDs in FIG. 11 the same, but also that "the LDs and PDs ***one-to-one correspond to each other***." EX1009, [0125] ("and" correspond to each other). Here again, I note, a POSITA would have recognized from Imai's description at paragraph [0125] that 1) the number of LDs and PDs "are the same" (e.g., 16 and 16), and 2) the LDs and

PDs "one-to-one correspond to each other," indicating a field of view that is "non-overlapping" so as to correspond to a single other LD.

239. Beyond Imai's explicit description for the one-to-one correspondence, a POSITA would have been motivated to implement the 16 LDs such that electromagnetic radiation output from each LD is coincident with a field of view of a corresponding PD, as I discussed previously.

To be clear, in the combined system, the SPADs for all of the pixels in the array (PDA) are operable to detect photons emitted from its corresponding optical emitter and received through the bulk imaging optic after being reflected from surfaces within the field. EX1009, FIGS. 4B and 2B-C, [0037]-[0041] and [0061]); EX1027, [0013]-[0020]; [0028]-[0029]; [0041]-[0048]; [0053]; [0066]; *supra* §§III.H.1-3.

4. Claim 45: The optical imaging system of claim 44 wherein the plurality of pixels further includes third and fourth pixels, and the plurality of apertures further includes a third aperture disposed in a third optical path extending between the bulk imaging optic and the third pixel and a fourth aperture disposed in a fourth optical path extending between the bulk imaging optic and the fourth pixel.

240. The Imai-Higashi-Grzesik combination teaches the added element of claim 45.

241. Based on my review, the aperture layer suggested by Grzesik comprises at least four instances connoted as "apertures 62," each formed over a respective

pixel of the SPAD array such that a respective optical path extends between the bulk imaging optic (i.e., image forming optical system) and the respective pixel (e.g., SPAD macro-cell) through the respective instance of aperture. EX1012, [0033-34], FIG. 3.

5. Claim 46: The optical imaging system of claim 44 wherein the plurality of emitters comprises a plurality of vertical-cavity surface-emitting lasers (VCSELs).

242. The Imai-Higashi-Grzesik combination teaches the added element of claim 46.

243. Imai expressly provides VCSELs as its LDs: "[T]he LDA in which a plurality of LDS is two-dimensionally arranged, a surface emission laser array in which a plurality of VCSELS (surface emission lasers) is one-dimensionally arranged in the sub-scanning direction, and a VCSEL array in which the VCSELs are two-dimensionally arranged may also be used." EX1009, [0138]. The system thus includes a plurality of VCSELs, one-dimensionally arranged in the sub-scanning direction (Z-axis on FIG. 6)." *Id.* Based on Imai's teaching that "the VCSEL (surface emission laser) may be used as a semiconductor laser," a POSITA would have readily recognized that the plurality of VCSELs are mounted on a common substrate. *Id.*, [0139] (noting VCSEL capable of "high density integration"); EX1027, [0119]-[0120].

6. Claim 47: The optical imaging system of claim 46 wherein each emitter in the plurality of emitters comprises a single VCSEL.

244. The Imai-Higashi-Grzesik combination teaches the added element of claim 47.

245. As discussed above under claim 46, Imai teaches "a plurality of VCSELs" arranged "in the sub-scanning direction [Z-axis on FIG. 6]." EX1009, [0138]. Based upon Imai's one-dimensional arrangement as depicted in the "Z" axis on FIG. 5, a POSITA would have recognized each LD comprises a single VCSEL. As I noted above under Sections VI.C & X.B.1, the high power capability of VCSEL was a known feature. *See e.g.*, EX1025 (Abstract, 3:26-5:23, 5:65-6:36, 11:4-12:10).

7. Claim 48: The optical imaging system of claim 44 wherein each pixel in the plurality of pixels is operable to output a signal corresponding to a count of photons incident on the pixel within one sample period.

246. The Imai-Higashi-Grzesik combination teaches the added element of claim 48.

247. In the Imai-Higashi-Grzesik combination, each pixel is operable to output a signal corresponding to a count of photons incident on the pixel within one sampling period, which is processing by the signal processing circuit. "When photons enter the SPAD receiving elements 56 in this state, the SPAD generates an

avalanche current. As such, the SPAD can output a signal indicating that the photon has detected the incident." EX1011, [0027].

248. For each of the first and second manners of providing the multi-SPAD pixels articulated above (*supra*, Section XI.E.3 under element 44(c)), Higashi teaches the conventional details regarding the output signal of the SPADs. For example, Higashi discloses a conventional pixel processing unit 31 connected to instances of readout circuit 52 "corresponding to each of the four light receiving elements 51 [of pixel 26]." EX1011, [0027]-[0028], [0041]-[0047] (explaining pixel processing unit 31 in FIG. 6 shown below), FIG. 4 (illustrating readout circuit 52 on pixel 26); *see also* [0031-40] ("the readout circuit 52 comprises a quench resistor 61, a digital transducer 62, an inverter 63, a buffer 64, and a selector 65 [as shown in FIG. 5]").

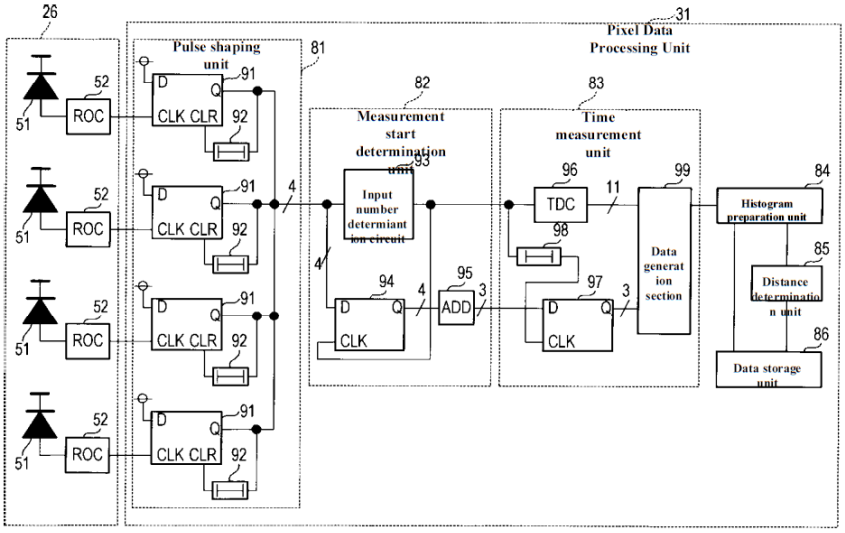

EX1011, FIG. 6 (showing pixel processing unit 31 and readout circuit 52).

249. As I have explained above, *supra* Section XI.E.1, a POSITA would have been motivated to utilize a signal processing circuit (as suggested by Higashi) to beneficially achieve the SPADs purpose of detecting the reflected optical energy ([0028] ("into a digital pulse signal")) and to then "determine the distance to an object." EX1011, [0056], [0076], [0041].

250. As explained in Higashi, each pixel in the plurality of pixels is operable to output a signal corresponding to a count of photons incident on the pixel within on sample period. Specifically, the signal processing circuit is configured to count incident photons within a sampling period for the plurality of pixel detectors, based on Higashi's suggestions. For example, Higashi describes each instance of readout circuit 52 "converts the signal output by the [corresponding] light receiving element 51 into a digital pulse signal when the laser light enters the light receiving element 51 [of pixel 26]." *Id.*, [0028]. The pixel processing unit 31, in conjunction with the instances of readout circuit 52, operate to count incident photons within a sampling period for the pixels of the combination system. *Id.*, [0041-44] ("the pixel data processing unit 31 [of FIG. 6] comprises of … a time measurement unit 83, [and others]), [0045-53] ("time measurement unit 83 that includes a Time to Digital Converter (TDC) 96, a plurality of D-shaped flip-flop circuits 97 [and others]", "the D-type flip-flop circuit 97 outputs a digital signal (light reception number signal) indicating the count result."). "As shown in FIG. 7 [below], the time measured by

the TDC 96 is on the horizontal axis, and the vertical axis represents the number of light receptions detected by the light receiving element 51 of the pixel 26 integrated within a unit scanning time." *Id.*, [0055]. Based on my knowledge and experience in the field and my review of Imai and Higashi, a POSITA would have found it obvious to utilize the photon counting of Higashi's circuit in both the first and second example combinations, whether or not using Higashi's 4-SPAD configuration, in order to effectuate the SPAD's purpose and effectively complete the distance analysis.

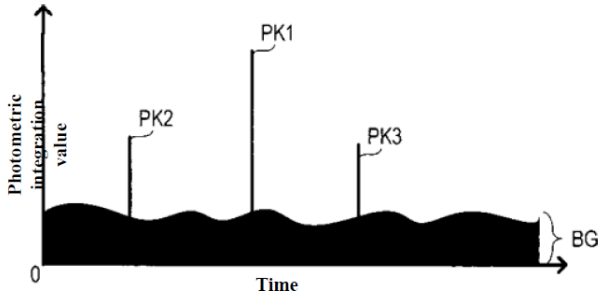

EX1011, at FIG. 7 (histogram of photon counts)

8. Claim 50: The optical imaging system of claim 44 wherein the optical imaging system is configured to collect distance data based on recorded times between transmission of beams of electromagnetic radiation emitted from the plurality of emitters and detection of photons originating from the beams of electromagnetic radiation.

251. The Imai-Higashi-Grzesik combination teaches the added element of claim 50.

252. The Imai-Higashi-Grzesik combination discloses the optical imaging system is configured to collect distance data based on recorded times between

transmission of beams of electromagnetic radiation emitted from the plurality of emitters and detection of photons originating from the beams of electromagnetic radiation. For example, Imai teaches "a scanning laser radar … for detecting whether there is an object … by emitting light and detecting a distance to the object and … by receiving reflected light (scattered light) from the object." EX1009, [0027], [0040], [0048], [0051-54]; [0078-81] ("the distance data of high resolution in the main-scanning direction and sub-scanning direction as illustrated in FIG. 6"); *see also* EX1011, [0020]. A "distance calculating unit 46 … calculates the distance to the object from time difference between rise timing of the LD driving signal and detection timing of the light reception signal by the PD output detecting unit 44", indicating the times are recorded in order to effectuating the calculations.

F. Ground 3 – Claims 44-48 and 50 are obvious based on Weimer, Borowski, and Hipp

253. Based upon my review of the references and my knowledge and experience in this field, my opinion is that the Weimer-Borowski-Hipp combination renders obvious claims 44-48 and 50.

1. Predictable combination of Weimer and Borowski

254. Based on my knowledge and experience in the field, and my review of Weimer and Borowski, a POSITA would have been motivated to implement Borowski's SPAD for each detector elements in Weimer's LiDAR system.

255. In the resulting combination, each pixel in the detector array of Weimer's LiDAR system would have utilized a plurality of SPADs, consistent with Borowski's suggestion. Additionally, a POSITA would have utilized the conventional SPAD-associated circuity, consistent with Borowski's suggestions. *See e.g.*, EX1006, FIGS. 6, 11, 12a, 12b, 18-19, [0223-24, 27-28], [0021], [0034], [0042], [0062], [0127], [0192], [0197-98], [0241-42], and claim 23.

256. Further, in view Borowski's suggestions and the known benefits at the time, a POSITA would have been prompted to implement each pixel in Weimer's detector array as a "macro-cell" having multiple SPADs. A POSITA would have recognized, based on Borowski's suggestions, the predictable benefits of such a configuration for smart averaging in time and space, enhancing image depth and acquisition speed. *See e.g.*, EX1006, FIG. 12a, [0233] (4-SPAD macro-cell), and [0323] ("N diodes [in FIG. 27] will react like a single SPAD with a very fast recovery time"); EX1029, [0033-34], [0062-63], FIGS. 2B, 3A.

257. As articulated below, there are at least five articulated reasons that would have prompted a POSITA to implement each pixel of Weimer's detector array using multiple SPADs (as suggested by Borowski), similar to the reasons I discussed above regarding the Retterath-Borowski combination (*supra*, XI.A.1).

258. As a first reason, a POSITA would have been motivated to predictably combine Weimer and Borowski to enhance the signal to noise ratio of Retterath's

detectors, and thereby improve system performance. *See e.g.*, EX1006, [0019]; *supra*, §XI.A.1 (Weimer-Borowski combination). For example, a POSITA would been prompted to utilize SPADs in Weimer's system, based on Borowski's suggestions, to improve sensitivity by facilitating detection of single photons. *See e.g.*, EX1006, [0019]. Borowski explicitly described the benefit that SPADs "are able to switch (avalanche) when receiving single photons." *Id.* Such sensitivity would have facilitated an enhanced signal-to-noise ratio and improved scene detection. Such benefits of SPADs were widely known in the prior art. *See e.g.*, EX1023, 8 ("SPADs have a very high sensitivity, with the ability to detect single photons, and they can be easily incorporated into an array since their operating voltage is low."), EX1019, 4 (describing SPADs as having "extraordinary" sensitivity for LiDAR applications)).

259. As a second reason, a POSITA would have been prompted to implement Weimer's LiDAR system using multiple SPADs per pixel, based on Borowski's suggestions, to achieve the performance advantages of SPADs known before September 2015, such as a high data-rate output in combination with low-power operation (and with the high signal-to-noise ratio described above). These include a high data-rate output in combination with low-power operation, and with the high signal-to-noise ratio described above, on an integrated circuit, for example. *See e.g.*, EX1028, [0012]-[0014] ("Single photon avalanche diodes are also simply

called SPADs. . . Single photon avalanche diodes are photosensitive detectors which can be implemented in standard CMOS technology and which, in a similar manner to avalanche photo diodes, convert incident photons into current pulses. Unlike avalanche photo diodes, however, single photon avalanche diodes are operated over an avalanche voltage. A single incident photon thus already triggers an avalanche effect which can be detected as a current pulse. Amplification factors of 10^5 to 10^6 allow a high sensitivity and thus the detection of even single photons."), [0020]-[0021] ("Single photon avalanche diodes can be manufactured in a standard CMOS process."), and EX1012, [0003] ("Electronic avalanche photodiodes (APDs) operating in Geiger-mode (GM) can be employed to detect single infrared photon arrival with sub-nanosecond accuracy"), [0005] ("Geiger-mode APD arrays bonded directly to readout circuits (ROICs)"), [0029] ("Photodiodes in the array can be connected directly to circuitry, such as a photodiode read out integrated circuit (ROIC)").

260. As a third reason, a POSITA would have been prompted to combine Weimer and Borowski to utilize multiple SPADs for each pixel to improve detection capability and accuracy. *Supra*, Section XI.A.1. A POSITA would have recognized from Borowski's teachings that multi-SPAD pixels advantageously increased the likelihood the pixel would more accurately detect photons when one or more of the individual SPADs was subject to quenching and reset. EX1006, [0053]; [0044].

Borowski describes the known benefit in which the output of a multi-SPAD pixel would be filtered and averaged such that it "acts as the equivalent of a single 'perfect' SPAD having no recovery time." EX1006, [0053].

261. As a fourth reason, a POSITA would have been prompted to implement the Weimer-Borowski combination due to Borowski's express suggestion for "an improved trade-off between image depth resolution and fast data acquisition for the detection of movements" ([0003]), by "local averaging between adjacent detectors to optimize the tradeoff between speed and sensitivity." EX1006, [0026], *see also* [0083], [0136-38], [0220], [0221], [0222], [0233], [0237]. [0249], [0258], [0267-71].

262. As a fifth reason, a POSITA would have found it obvious to combine Weimer and Borowski because doing so was the application of known techniques to a known system ready for improvement to yield predictable results. Borowski suggests multi-SPAD detectors and Weimer's describes a LiDAR system that utilized an array of detectors ready for improvement. Based upon the overlapping teachings of these LiDAR publications (Weimer and Borowski) and the predictable nature of such components at the time, a POSITA would have had a reasonable expectation of success in making the proposed modifications based on the similarity of the emitter/detector systems for distance measurement in Weimer and Borowski.

2. Predictable combination of Weimer, Borowski, and Hipp

263. Based on my knowledge and experience in the field, and my review of Weimer, Borowski, and Hipp, a POSITA would have been motivated to implement an aperture layer (as suggested by Hipp's shadow mask) over the SPAD detector array of the Weimer-Borowski combination (detailed above) to achieve known benefits. In such predictable combination, each of the apertures (i.e., pinholes) would have been aligned with a corresponding one of the pixels. EX1007, 21:57-67.

264. As a first reason, a POSITA would have been prompted to combine Hipp with the Weimer-Borowski combination to reduce cross-talk among the pixels of the LiDAR system, which Hipp's shadow mask was designed specifically to address. EX1007, 21:46-56; 21:57-67; §XI.C.1. For example, Hipp explains that "interference pulses arise which superimpose themselves with the desired signals which is a basic problem of the array technique." *Id*. A POSITA would have recognized, from Hipp's explicit discussion, that the shadow mask solves that problem "such that only that light is transmitted which would also be incident on the active zones." *Id*., 21:57-67. Notably, Hipp additionally explains that "remaining light can be avoided" such that "the unwanted light does not enter into the region of the active zones at all…." *Id*., 21:60-67.

265. As a second reason, a POSITA would have been prompted to implement Hipp's suggestion with the Weimer-Borowski combination because doing so—especially by the relatively late time frame leading up to September 2015—was the application of known techniques to a known system ready for improvement to yield predictable results. The primary Weimer system provided a known LiDAR system having an array of detectors that was ripe for the added benefits articulated above, and Hipp expressly suggested a shadow mask in such systems utilized to reduce interference. Moreover, especially in view of the similarity of the systems and the overlapping teachings in these LiDAR-related references, a POSITA would have readily implemented a shadow mask based on Hipp's suggestions, with a reasonable expectation of success, in the LiDAR system of the Weimer-Borowski combination. EX1007, 21:60-67, FIG. 16.

3. Claim 44

a) Element 44(a): An optical imaging system comprising:

266. The Weimer-Borowski-Hipp combination provides Element 44(a).

267. As I have explained above, *supra* §§X.B&D, XI.F.1, Weimer discloses a LiDAR device 104 that includes a light source 304 and pixel array 324 that detects reflected photons to determine distance information. EX1009, 4:9-15; 8:48-60, FIGS. 3A, 3D.

b) Element 44(b): a bulk imaging optic;

268. The Weimer-Borowski-Hipp combination provides Element 44(b).

269. As I have explained above, *supra* §§X.B&D, XI.F.1, Weimer discloses a receive optic 322 that is positioned in front of the pixel array 324 and configured to receive photons reflected from objects in the target scene:

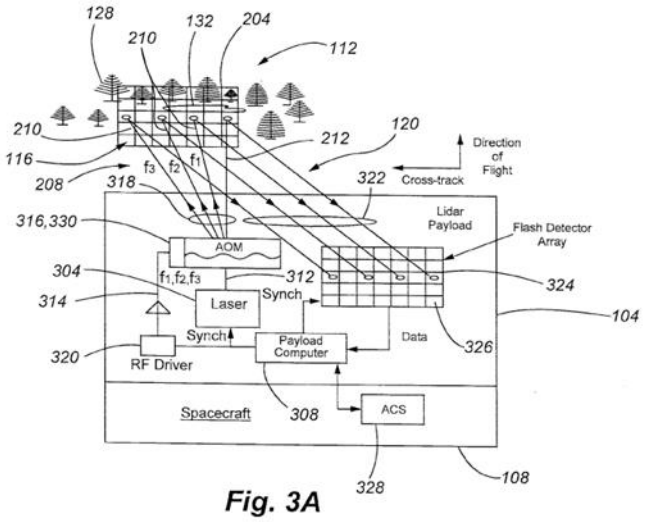

Fig. 3A

Id., FIG. 3A, 10:3-16.

c) Element 44(c): a plurality of pixels arranged behind the bulk imaging optic, wherein each pixel in the plurality of pixels comprises a plurality of single photon avalanche diodes (SPADs) and has a field of view that is non-overlapping beyond a threshold distance in a field external to the optical imaging system with fields of view of all other pixels in the plurality of pixels, and wherein the plurality of pixels includes at least a first pixel and a second pixel;;

270. The Weimer-Borowski-Hipp combination provides Element 44(c).

271. As I have explained above, *supra* Section X.D, the pixel array 324 in Weimer includes a plurality of pixels 326, including a first pixel and a second pixel. EX1008, 8:58-9:6, FIG. 3A-3D, 11:29-48. Each pixel in the plurality of pixels has a field-of-view that is non-overlapping beyond a threshold distance in a field external to the optical imaging system with fields of view of all other pixels in the plurality of pixels. For example, in one embodiment, the individual beams 208 have discrete, non-overlapping emission regions, as shown in FIG. 2A, and each pixel 326 has a field-of-view that matches a corresponding beam 208 from the illumination source. *Id.*, FIG. 3A, 10:17-45; *see also* 4:56-58, 1:56-59.

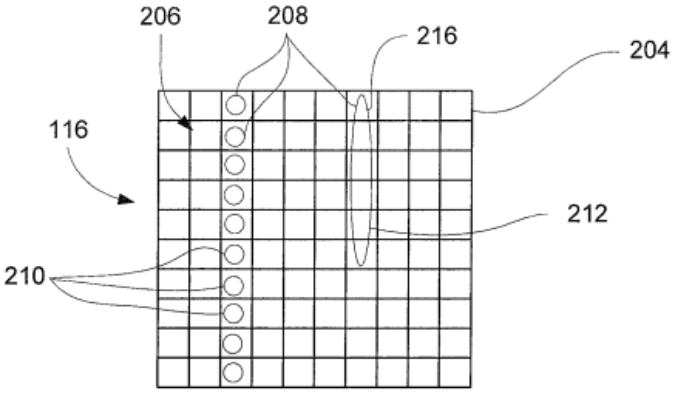

Fig. 2A

Id., FIG. 2A.

272. FIG. 3A of Weimer provides another example:

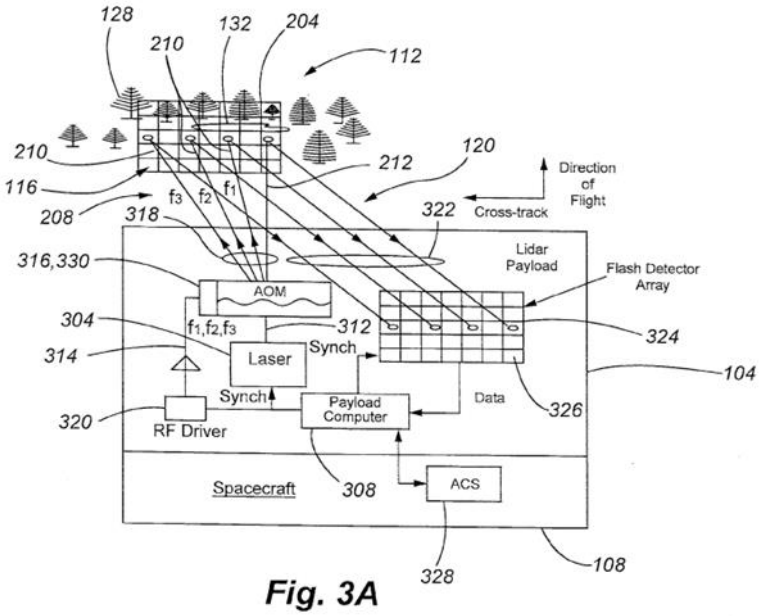

Fig. 3A

Id., FIG. 3A.

273. In the Weimer-Borowski-Hipp combination, each pixel is implemented using multi-SPAD detector array suggested by Borowski. *Supra*, §XI.F.1; EX1006, Abstract, [0003], [0014], [0027], [0040], [0044], [0154-57], [0233], [0323], FIGS. 1, 5, 12, 27.

> *d) Element 44(d): an aperture layer disposed between the bulk imaging optic and the plurality of pixels, the aperture layer comprising a plurality of apertures separated from each other by a stop region, the plurality of apertures including a first aperture disposed in a first optical path extending between the bulk imaging optic and the first pixel and a second aperture disposed in a second optical path extending between the bulk imaging optic and the second pixel;*

274. The Weimer-Borowski-Hipp combination provides Element 44(d).

275. As I have explained above, *supra* Section X.D-E, XI.F.1, in the Weimer-Borowski-Hipp combination, Hipp provides a shadow mask with apertures. EX1007, 21:57-67; *see also*, FIG. 16 (dark area on shadow mask 134). The resulting combination includes the shadow mask (as suggested by Hipp) including at least four apertures (pinholes), each formed over a respective pixel of the SPAD array such that a respective optical path extends between the bulk imaging optic (i.e., macro lens 230) and the respective pixel (e.g., SPAD macro-cell) through the respective aperture (i.e., pinhole). EX1007, 21:57-67.

e) Element 44(e): a bulk transmitting optic disposed adjacent to the bulk imaging optic; and

276. The predictable Weimer-Borowski-Hipp combination provides Element 44(e).

277. As I have explained above, *supra* Section X.D-E, XI.F.1, in the Weimer-Borowski-Hipp combination, Weimer provides a bulk transmitting optic (e.g., transmit optic 318) that transmits light beams 208 to the surrounding environment and disposed adjacent to the bulk transmit optic 31:

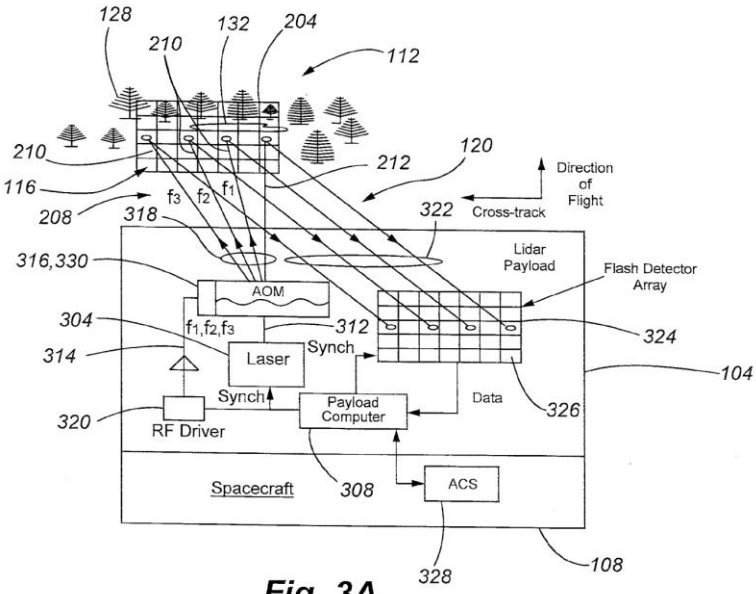

Fig. 3A

EX1007, FIG. 3A, 10:3-16.

f) Element 44(f): a plurality of emitters arranged to project electromagnetic radiation through the bulk transmitting optic and into the field according to an illumination pattern where electromagnetic radiation output from each emitter in the illumination pattern is coincident with a field of view of a corresponding pixel in the plurality of pixels.

278. The predictable Weimer-Borowski-Hipp combination provides Element 44(f).

279. As I have explained above, *supra* Section X.D, XI.F.1, in the Weimer-Borowski-Hipp combination, Weimer describes the light source 304 includes a laser array 306 that produces output beams 208, which are a form of electromagnetic radiation. EX1007, FIG. 3D, 11:29-48. The emission region of each output beam

208 is non-overlapping and coincident with a field of view of a corresponding pixel 326 in the pixel array 324:

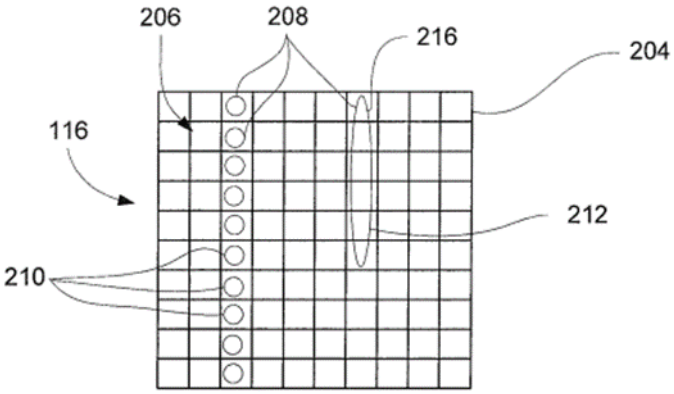

Fig. 2A

Id., FIG. 2A; 4:56-58; *see also* 1:56-59 FIG. 3A, 10:17-45.

4. Claim 45: The optical imaging system of claim 44 wherein the plurality of pixels further includes third and fourth pixels, and the plurality of apertures further includes a third aperture disposed in a third optical path extending between the bulk imaging optic and the third pixel and a fourth aperture disposed in a fourth optical path extending between the bulk imaging optic and the fourth pixel.

280. The predictable Weimer-Borowski-Hipp combination provides the added element of claim 45.

281. As I have explained above, *supra* Sections X.D-D, XI.F.1, in the Weimer-Borowski-Hipp combination, the shadow mask (suggested by Hipp) includes at least first, second, third, and fourth apertures (pinholes), each formed over a respective pixel of the SPAD array such that a respective optical path extends

between the bulk imaging optic (i.e., macro lens 230) and the respective pixel (e.g., SPAD macro-cell) through the respective aperture (i.e., pinhole). EX1007, 21:57-67; *supra*, Ground 1C (analysis of claim 45); §IX.C.1.

5. Claim 46: The optical imaging system of claim 44 wherein the plurality of emitters comprises a plurality of vertical-cavity surface-emitting lasers (VCSELs).

282. The predictable Weimer-Borowski-Hipp combination provides the added element of claim 46. As I have explained above, *supra* Section X.D, Weimer states that laser array 306 includes a "VCSEL array" with "multiple lasers." EX1008, 11:35-46, 10:17-45, 4:56-58, 1:56-59, FIG. 3A.

6. Claim 47: The optical imaging system of claim 46 wherein each emitter in the plurality of emitters comprises a single VCSEL.

283. The predictable Weimer-Borowski-Hipp combination provides a single VCSEL for each optical emitter of the plurality optical emitters. Weimer explains that the illumination source may include a VCSEL array. EX1008, 9:32, 11:39-41. And Weimer teaches that "individual beams 208 can be directed to cover an area corresponding to a single pixel of the detector." *Id.*, 4:56-58, 11:35-46, 10:17-45, 4:56-58, 1:56-59, FIG. 3A.

7. Claim 48: The optical imaging system of claim 44 wherein each pixel in the plurality of pixels is operable to output a

signal corresponding to a count of photons incident on the pixel within one sample period.

284. The predictable Weimer-Borowski-Hipp combination provides the added element of claim 46. As I have explained above, *supra* Sections X.D, XI.F.1, the resulting system would have predictably processed output from the pixels for each sampling period (as suggested by Borowski) to count one or more incident photons received on the pixels. EX1006, [0223]-[0224] ("built on a CMOS integrated circuit"), FIG. 11, [0227]-[0228] ("converts the received photons"), [0245]-[0248], [0187-89] (integrated SPAD and TDC in FIG. 6); *see also* Ground 2A (claim 48).

8. Claim 50: The optical imaging system of claim 44 wherein the optical imaging system is configured to collect distance data based on recorded times between transmission of beams of electromagnetic radiation emitted from the plurality of emitters and detection of photons originating from the beams of electromagnetic radiation.

285. The predictable Weimer-Borowski-Hipp combination provides the added element of claim 46. As I have explained above, *supra* Sections X.D, XI.F.1, LiDAR system uses time-of-flight to measure the distance to objects in the field, which is based on the time between transmission of beams from the emitters and detection of photons by the pixels. EX1008, 4:9-15.

G. Secondary Considerations

286. I am not aware of any evidence regarding secondary considerations of non-obviousness, and Ouster did not identify any documentary such evidence in the patent specification, prosecution history, or in related district court and ITC complaints. To the extent Ouster identifies evidence of secondary considerations at a later point in the proceeding, I reserve the right to address it at that time.

XII. CONCLUSION

287. For the aforementioned reasons, a POSITA would have recognized that a number of predictable prior art combinations (articulated in the grounds above) would have achieved all elements of claims 44-48 and 50 of the ’750 Patent are invalid in view of the prior art, for the reasons discussed above.

I hereby declare that all statements made herein of my own knowledge are true and that all statements made on the information and belief are believed to be true; I declare under penalty of perjury that the foregoing is true and correct, and understand that willful false statements and the like are punishable by fine or imprisonment, or both pursuant to 18 U.S.C. 1001.

Date: September 25, 2023 Respectfully Submitted

James F. Shanley

Dr. James F. Shanley