US011422236B2

(12) **United States Patent**
Pacala et al.

(10) **Patent No.: US 11,422,236 B2**
(45) **Date of Patent: *Aug. 23, 2022**

(54) **OPTICAL SYSTEM FOR COLLECTING DISTANCE INFORMATION WITHIN A FIELD**

(71) Applicant: **Ouster, Inc.**, San Francisco, CA (US)

(72) Inventors: **Angus Pacala**, San Francisco, CA (US); **Mark Frichtl**, San Francisco, CA (US); **Marvin Shu**, San Francisco, CA (US); **Eric Younge**, San Francisco, CA (US)

(73) Assignee: **Ouster, Inc.**, San Francisco, CA (US)

(*) Notice: Subject to any disclaimer, the term of this patent is extended or adjusted under 35 U.S.C. 154(b) by 0 days.

This patent is subject to a terminal disclaimer.

(21) Appl. No.: **17/552,303**

(22) Filed: **Dec. 15, 2021**

(65) **Prior Publication Data**

US 2022/0107395 A1 Apr. 7, 2022

Related U.S. Application Data

(63) Continuation of application No. 17/194,068, filed on Mar. 5, 2021, which is a continuation of application

(Continued)

(51) **Int. Cl.**
G01C 3/08 (2006.01)
G01S 7/481 (2006.01)

(Continued)

(52) **U.S. Cl.**
CPC ***G01S 7/4816*** (2013.01); ***G01S 7/4817*** (2013.01); ***G01S 17/08*** (2013.01); ***G01S 17/89*** (2013.01)

(58) **Field of Classification Search**
None
See application file for complete search history.

(56) **References Cited**

U.S. PATENT DOCUMENTS

4,358,851 A 11/1982 Scifres et al.
4,634,272 A 1/1987 Endo

(Continued)

FOREIGN PATENT DOCUMENTS

CN 101281914 A 10/2008
CN 101288105 A 10/2008

(Continued)

OTHER PUBLICATIONS

"HDL-32E", User's Manual 2010, Velodyne Lidar, Incorporated, Available Online at: https://www.yumpu.com/en/document/view/11661149/hdl-32e-manual-velodyne-lidar, Aug. 2016, 28 pages.

(Continued)

Primary Examiner — Mark Hellner
(74) *Attorney, Agent, or Firm* — Kilpatrick Townsend & Stockton LLP

(57) **ABSTRACT**

Optical systems and methods for collecting distance information are disclosed. An example optical system includes a first transmitting optic, a plurality of illumination sources, a pixel array comprising at least a first column of pixels and a second column of pixels, each pixel in the first column of pixels being offset from an adjacent pixel in the first column of pixels by a first pixel pitch, the second column of pixels being horizontally offset from the first column of pixels by the first pixel pitch, the second column of pixels being vertically offset from the first column of pixels by a first vertical pitch; and a set of input channels interposed between the first transmitting optic and the pixel array.

27 Claims, 15 Drawing Sheets

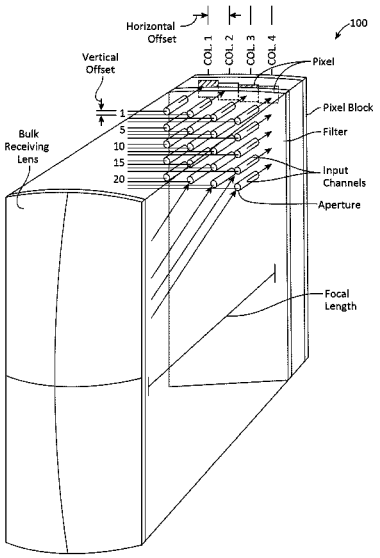

Exhibit 1042
Hesai v. Ouster
IPR2023-01457

Related U.S. Application Data

No. 15/685,384, filed on Aug. 24, 2017, now Pat. No. 10,948,572.

(60) Provisional application No. 62/379,130, filed on Aug. 24, 2016.

(51) **Int. Cl.**
G01S 17/89 (2020.01)
G01S 17/08 (2006.01)

(56) **References Cited**

U.S. PATENT DOCUMENTS

4,676,599 A 6/1987 Cruz
4,702,600 A 10/1987 Handrich et al.
4,744,667 A 5/1988 Fay et al.
4,851,664 A 7/1989 Rieger
5,267,016 A 11/1993 Meinzer et al.
5,288,992 A 2/1994 Fohl
5,602,391 A 2/1997 Pines et al.
5,982,552 A 11/1999 Nakama et al.
6,014,232 A 1/2000 Clarke
6,133,989 A 10/2000 Stettner et al.
6,255,133 B1 7/2001 Ormond et al.
6,374,024 B1 4/2002 Iijima
6,414,746 B1 7/2002 Stettner et al.
6,690,019 B2 2/2004 Stettner et al.
6,721,262 B1 4/2004 Jordache et al.
7,091,462 B2 8/2006 Wilson et al.
D531,525 S 11/2006 Dold et al.
7,170,542 B2 1/2007 Hanina et al.
7,295,298 B2 11/2007 Willhoeft et al.
7,345,271 B2 3/2008 Boehlau et al.
7,421,159 B2 9/2008 Yang et al.
7,433,042 B1 10/2008 Cavanaugh et al.
7,808,706 B2 10/2010 Fadel et al.
7,969,558 B2 6/2011 Hall
8,013,983 B2 9/2011 Lin et al.
8,089,618 B2 1/2012 Yang
8,130,367 B2 3/2012 Stettner et al.
D659,030 S 5/2012 Anselment et al.
8,319,949 B2 11/2012 Cantin et al.
8,330,840 B2 12/2012 Lenchenkov
8,374,405 B2 2/2013 Lee et al.
8,384,997 B2 2/2013 Shpunt et al.
8,494,252 B2 7/2013 Freedman et al.
8,675,181 B2 3/2014 Hall
8,717,488 B2 5/2014 Shpunt et al.
8,742,325 B1 6/2014 Droz et al.
8,743,176 B2 6/2014 Stettner et al.
8,761,495 B2 6/2014 Freedman et al.
8,767,190 B2 7/2014 Hall
8,829,406 B2 9/2014 Akerman et al.
8,836,922 B1 9/2014 Pennecot et al.
8,848,039 B2 9/2014 Spektor et al.
9,041,915 B2 5/2015 Earhart et al.
9,063,549 B1 6/2015 Pennecot et al.
9,071,763 B1 6/2015 Templeton et al.
9,086,273 B1 7/2015 Gruver et al.
9,111,444 B2 8/2015 Kaganovich
9,157,790 B2 10/2015 Shpunt et al.
9,164,511 B1 10/2015 Ferguson et al.
9,176,051 B2 11/2015 Mappes et al.
9,229,109 B2 1/2016 Stettner et al.
9,285,464 B2 3/2016 Pennecot et al.
9,285,477 B1 3/2016 Smith et al.
9,299,731 B1 3/2016 Lenius et al.
9,368,936 B1 6/2016 Lenius et al.
9,369,689 B1 6/2016 Tran et al.
9,383,753 B1 7/2016 Templeton et al.
9,425,654 B2 8/2016 Lenius et al.
9,435,891 B2 9/2016 Oggier
9,470,520 B2 10/2016 Schwarz et al.
9,489,601 B2 11/2016 Fairfield et al.
9,525,863 B2 12/2016 Nawasra et al.
9,529,079 B1 12/2016 Droz et al.
9,551,791 B2 1/2017 Van Den Bossche et al.
9,989,406 B2 6/2018 Pacala et al.
9,992,477 B2 6/2018 Pacala et al.
10,063,849 B2 8/2018 Pacala et al.
10,183,541 B2 1/2019 Van Den Bossche et al.
10,222,458 B2 * 3/2019 Pacala G01S 17/08
10,222,475 B2 3/2019 Pacala et al.
10,663,586 B2 5/2020 Pacala et al.
10,809,359 B2 10/2020 Pacala et al.
10,948,572 B2 3/2021 Pacala et al.
11,025,885 B2 6/2021 Pacala et al.
11,086,013 B2 8/2021 Pacala et al.
11,131,773 B2 9/2021 Pacala et al.
11,150,347 B2 10/2021 Pacala et al.
11,175,405 B2 11/2021 Pacala et al.
11,178,381 B2 11/2021 Pacala et al.
11,190,750 B2 11/2021 Pacala et al.
11,196,979 B2 12/2021 Pacala et al.
11,202,056 B2 12/2021 Pacala et al.
2003/0006676 A1 1/2003 Smith et al.
2003/0047752 A1 3/2003 Campbell et al.
2004/0061502 A1 4/2004 Hasser
2004/0223071 A1 11/2004 Wells et al.
2005/0030409 A1 2/2005 Matherson et al.
2006/0244851 A1 11/2006 Cartlidge
2007/0007563 A1 1/2007 Mouli
2007/0060806 A1 3/2007 Hunter et al.
2007/0071056 A1 3/2007 Chen
2007/0228262 A1 10/2007 Cantin et al.
2008/0121826 A1 5/2008 Manley et al.
2008/0153189 A1 6/2008 Plaine et al.
2009/0016642 A1 1/2009 Hart
2009/0040629 A1 2/2009 Bechtel et al.
2009/0179142 A1 7/2009 Duparre et al.
2009/0295910 A1 12/2009 Mir et al.
2010/0008588 A1 1/2010 Feldkhun et al.
2010/0020306 A1 1/2010 Hall
2010/0110275 A1 5/2010 Mathieu
2010/0123893 A1 5/2010 Yang
2010/0204964 A1 8/2010 Pack et al.
2011/0025843 A1 2/2011 Oggier et al.
2011/0032398 A1 2/2011 Lenchenkov
2011/0037849 A1 2/2011 Niclass et al.
2011/0116262 A1 5/2011 Marson
2011/0216304 A1 9/2011 Hall
2012/0044476 A1 2/2012 Earhart et al.
2012/0140109 A1 6/2012 Shpunt et al.
2012/0154914 A1 6/2012 Moriguchi et al.
2012/0182464 A1 7/2012 Shpunt et al.
2012/0287417 A1 11/2012 Mimeault
2012/0320164 A1 12/2012 Lipton
2013/0044310 A1 2/2013 Mimeault
2013/0141549 A1 6/2013 Beers et al.
2013/0206967 A1 8/2013 Shpunt et al.
2013/0229646 A1 9/2013 Sakurai
2013/0294089 A1 11/2013 Freedman et al.
2013/0300840 A1 11/2013 Borowski
2014/0055661 A1 2/2014 Imamura et al.
2014/0118335 A1 5/2014 Gurman
2014/0118493 A1 5/2014 Sali et al.
2014/0153001 A1 6/2014 Chayat et al.
2014/0158900 A1 6/2014 Yoon et al.
2014/0168631 A1 6/2014 Haslim et al.
2014/0176933 A1 6/2014 Haslim et al.
2014/0211194 A1 7/2014 Pacala et al.
2014/0269796 A1 9/2014 Geske et al.
2014/0285628 A1 9/2014 Shpunt et al.
2014/0291491 A1 10/2014 Shpunt et al.
2014/0313519 A1 10/2014 Shpunt et al.
2014/0375977 A1 12/2014 Ludwig et al.
2014/0376092 A1 12/2014 Mor
2015/0002636 A1 1/2015 Brown
2015/0034809 A1 2/2015 Droz et al.
2015/0055117 A1 * 2/2015 Pennecot G01S 17/89 356/4.01
2015/0131080 A1 5/2015 Retterath et al.
2015/0184999 A1 7/2015 Stettner
2015/0192677 A1 7/2015 Yu et al.

(56) **References Cited**

U.S. PATENT DOCUMENTS

2015/0260830	A1	9/2015	Ghosh et al.
2015/0268450	A1	9/2015	Ueno et al.
2015/0292948	A1	10/2015	Goldring et al.
2015/0293224	A1	10/2015	Eldada et al.
2015/0316473	A1	11/2015	Kester et al.
2015/0355470	A1	12/2015	Merschbach
2015/0358601	A1	12/2015	Oggier
2015/0378241	A1	12/2015	Eldada
2015/0379371	A1	12/2015	Yoon et al.
2016/0003946	A1	1/2016	Gilliland et al.
2016/0047895	A1	2/2016	Dussan
2016/0047896	A1	2/2016	Dussan
2016/0047897	A1	2/2016	Dussan
2016/0047898	A1	2/2016	Dussan
2016/0047899	A1	2/2016	Dussan
2016/0047900	A1	2/2016	Dussan
2016/0047901	A1	2/2016	Pacala et al.
2016/0047903	A1	2/2016	Dussan
2016/0049765	A1	2/2016	Eldada
2016/0097858	A1	4/2016	Mundhenk et al.
2016/0150963	A1	6/2016	Roukes et al.
2016/0161600	A1	6/2016	Eldada et al.
2016/0218727	A1	7/2016	Maki
2016/0265902	A1	9/2016	Nawasra et al.
2016/0291134	A1	10/2016	Droz et al.
2016/0306032	A1	10/2016	Schwarz et al.
2016/0327779	A1	11/2016	Hillman
2016/0328619	A1	11/2016	Yi et al.
2017/0146640	A1	5/2017	Hall et al.
2017/0219426	A1	8/2017	Pacala et al.
2017/0219695	A1	8/2017	Hall et al.
2017/0269197	A1	9/2017	Hall et al.
2017/0269198	A1	9/2017	Hall et al.
2017/0269209	A1	9/2017	Hall et al.
2017/0269215	A1*	9/2017	Hall G01S 7/4811
2017/0289524	A1	10/2017	Pacala et al.
2017/0350983	A1	12/2017	Hall et al.
2018/0059222	A1	3/2018	Pacala et al.
2018/0152691	A1	5/2018	Pacala et al.
2018/0209841	A1	7/2018	Pacala et al.
2018/0267143	A1	9/2018	Alcalde et al.
2018/0299554	A1	10/2018	Van Dyck et al.
2019/0041498	A1	2/2019	Droz et al.

FOREIGN PATENT DOCUMENTS

CN	102292676	A	12/2011
CN	103460024	A	12/2013
CN	104597609	A	5/2015
EP	0095725	A1	12/1983
EP	2124069	A1	11/2009
EP	3045935	A1	7/2016
EP	3002548	B1	9/2016
EP	3316000	A1	5/2018
JP	036407	A	1/1991
JP	05256691	A	10/1993
JP	0749417	A	2/1995
JP	2003004850	A	1/2003
JP	2012142952	A	7/2012
JP	2013201466	A	10/2013
JP	2016161438	A	9/2016
WO	2009153699	A1	12/2009
WO	2013114891	A1	8/2013
WO	2015052616	A1	4/2015
WO	2016116733	A1	7/2016
WO	2016125165	A2	8/2016
WO	2017132704	A1	8/2017
WO	2018039432	A1	3/2018
WO	2018065426	A1	4/2018
WO	2018065427	A1	4/2018
WO	2018065428	A2	4/2018
WO	2018065429	A1	4/2018
WO	2018122415	A1	7/2018
WO	2018197441	A1	11/2018

OTHER PUBLICATIONS

"HDL-32E", Data Sheet 2010, Velodyne Lidar, Incorporated, Available Online at: http://pdf.directindustry.com/pdf/velodynelidar/hdl-32e-datasheet/182407-676098.html, 2017, 3 pages.

"HDL-32E", Velodyne Lidar, Incorporated, Available Online at: http://www.velodynelidar.com/hdl-32e.html, Dec. 6, 2017, 3 pages.

"HDL-64E", Velodyne Lidar, Incorporated, Available online at: http://www.velodynelidar.com/hdl-64e.html, Dec. 6, 2017, 12 pages.

"HDL-64E S2", Data Sheet, Velodyne Lidar, Inc., Available online at: http://velodynelidar.com/lidar/products/brochure/HDL-64E%20S2%20datasheet_2010_lowres.pdf, 2017, 2 pages.

"HDL-64E S2 and S2.1", Velodyne Lidar, Incorporated, User's Manual and Programming Guide, Firmware version 4, 2007, 43 pages.

"HDL-64E S3", Velodyne Lidar, Incorporated, S3 User's Manual and Programming Guide Revision J, Dec. 2017, 54 pages.

"Puck Hi-Res", Velodyne Lidar, Incorporated, Available Online at: http://www.velodynelidar.com/vip-16-hi-res.html, Dec. 13, 2017, 2 pages.

"Puck Hi-Res Data Sheet", Velodyne Lidar, Incorporated, Sep. 2016, 2 pages.

"Puck Hi-Res User Manual", Velodyne Lidar, Incorporated, Sep. 2016, 49 pages.

"Puck Lite", Velodyne Lidar, Incorporated, Our Lightest Sensor Ever, Available Online at: http://velodynelidar.com/vlp-16-lite.html, Apr. 2016, 2 pages.

"Puck Lite Data Sheet", Velodyne Lidar, Incorporated, Feb. 2016, 2 pages.

"Puck Lite User Manual", Velodyne Lidar, Incorporated, Feb. 2016, 49 pages.

"Ultra Puck VLP-32C", Velodyne Lidar, Incorporated, Available Online at: http://velodynelidar.com/vlp-32c.html, Nov. 2017, 4 pages.

"Velodyne LiDAR Puck", Velodyne Lidar, Incorporated, Available online at: http://www.velodynelidar.com/vip-16.html, Dec. 6, 2017, 48 pages.

"Velodyne LiDAR Puck", Velodyne Lidar, Incorporated, User's Manual and Programming Guide, 2014, 49 pages.

"VLP-16", Velodyne Lidar, Incorporated, Puck, Real Time 3D Lidar Sensor, 2014, 2 pages.

U.S. Appl. No. 15/419,053, Non-Final Office Action, dated Jul. 28, 2017, 18 pages.

U.S. Appl. No. 15/685,384, Non-Final Office Action, dated Aug. 17, 2020, 6 pages.

U.S. Appl. No. 15/685,384, Non-Final Office Action, dated Nov. 15, 2019, 6 pages.

U.S. Appl. No. 15/685,384, Notice of Allowance, dated Feb. 12, 2020, 5 pages.

U.S. Appl. No. 15/685,384, Notice of Allowance, dated Nov. 18, 2020, 7 pages.

U.S. Appl. No. 15/934,613, "Corrected Notice of Allowability", dated Dec. 28, 2018, 2 pages.

U.S. Appl. No. 15/934,613, Non-Final Office Action, dated Jul. 6, 2018, 6 pages.

U.S. Appl. No. 15/934,613, Notice of Allowance, dated Nov. 23, 2018, 5 pages.

U.S. Appl. No. 16/123,988, "Corrected Notice of Allowability", dated Jun. 22, 2020, 2 pages.

U.S. Appl. No. 16/123,988, "Corrected Notice of Allowability", dated Jul. 23, 2020, 3 pages.

U.S. Appl. No. 16/123,988, "Ex Parte Quayle Action", dated Feb. 3, 2020, 5 pages.

U.S. Appl. No. 16/123,988, Notice of Allowance, dated May 15, 2020, 5 pages.

AU2017315762, "First Examination Report", dated Jul. 19, 2019, 5 pages.

AU2017315762, "Second Examination Report", dated Nov. 13, 2019, 4 pages.

Bronzi et al., "100 000 Frames/s 64×32 Single Photon Detector Array for 2-D Imaging and 3-D Ranging", Institute of Electrical and Electronics Engineers Journal of Selected Topic in Quantum Electronics, vol. 20, No. 6, Nov.-Dec. 2014, 10 pages.

(56) **References Cited**

OTHER PUBLICATIONS

Charbon et al., "SPAD-Based Sensors", TOF Range-Imaging Cameras, Apr. 9, 2013, pp. 11-38.
Application No. CN201780062843.6, Notice of Decision to Grant, dated May 11, 2021, 6 pages.
Application No. CN201780062843.6, Office Action, dated Sep. 28, 2020, 11 pages.
Cova et al., "Single-Photon Counting Detectors", Institute of Electrical and Electronics Engineers Photonics Journal, vol. 3, No. 2, Apr. 2011, pp. 274-277.
Application No. EP17844396.6, Extended European Search Report, dated May 29, 2020, 9 pages.
Guerrieri et al., "Two-Dimensional SPAD Imaging Camera for Photon Counting", Institute of Electrical and Electronics Engineers Photonics Journal, vol. 2, No. 5, Oct. 2010, pp. 759-774.
Application No. IL265003, Office Action, dated Oct. 13, 2021, 9 pages.
IN201947008121, "First Examination Report", dated Aug. 2, 2021, 7 pages.
Itzler et al., "Geiger-Mode Avalanche Photodiode Focal Plane Arrays for Three-dimensional Imaging LADAR", Proc of SPIE, vol. 7808, 2010, pp. 78080C-1-78080C-14.
Application No. JP2019-531544, Notice of Decision to Grant, dated Nov. 16, 2020, 1 page.
Application No. JP2019-531544, Office Action, dated Jul. 20, 2020, 5 pages.
Application No. JP2020-208324, Office Action, dated Sep. 13, 2021, 7 pages.
Kilpela et al., "Precise Pulsed Time-of-Flight Laser Range Finder for Industrial Distance Measurements", Review of Scientific Instruments, vol. 72, No. 4, Apr. 2001, pp. 2197-2202.
Application No. PCT/US2017/039306, International Search Report and Written Opinion, dated Nov. 7, 2017, 21 pages.
PCT/US2017/039306, "Invitation to Pay Additional Fees and, Where Applicable, Protest Fee", Aug. 31, 2017, 2 pages.
Application No. PCT/US2017/048379, International Preliminary Report on Patentability, dated Mar. 7, 2019, 10 pages.
Application No. PCT/US2017/048379, International Search Report and Written Opinion, dated Nov. 2, 2017, 11 pages.
Application No. SG11201901600W, Notice of Decision to Grant, dated Apr. 13, 2021, 5 pages.
Application No. SG11201901600W, Written Opinion, dated Mar. 28, 2020, 13 pages.
Application No. KR10-2019-7008085, Office Action, dated Mar. 23, 2022, 8 pages.

* cited by examiner

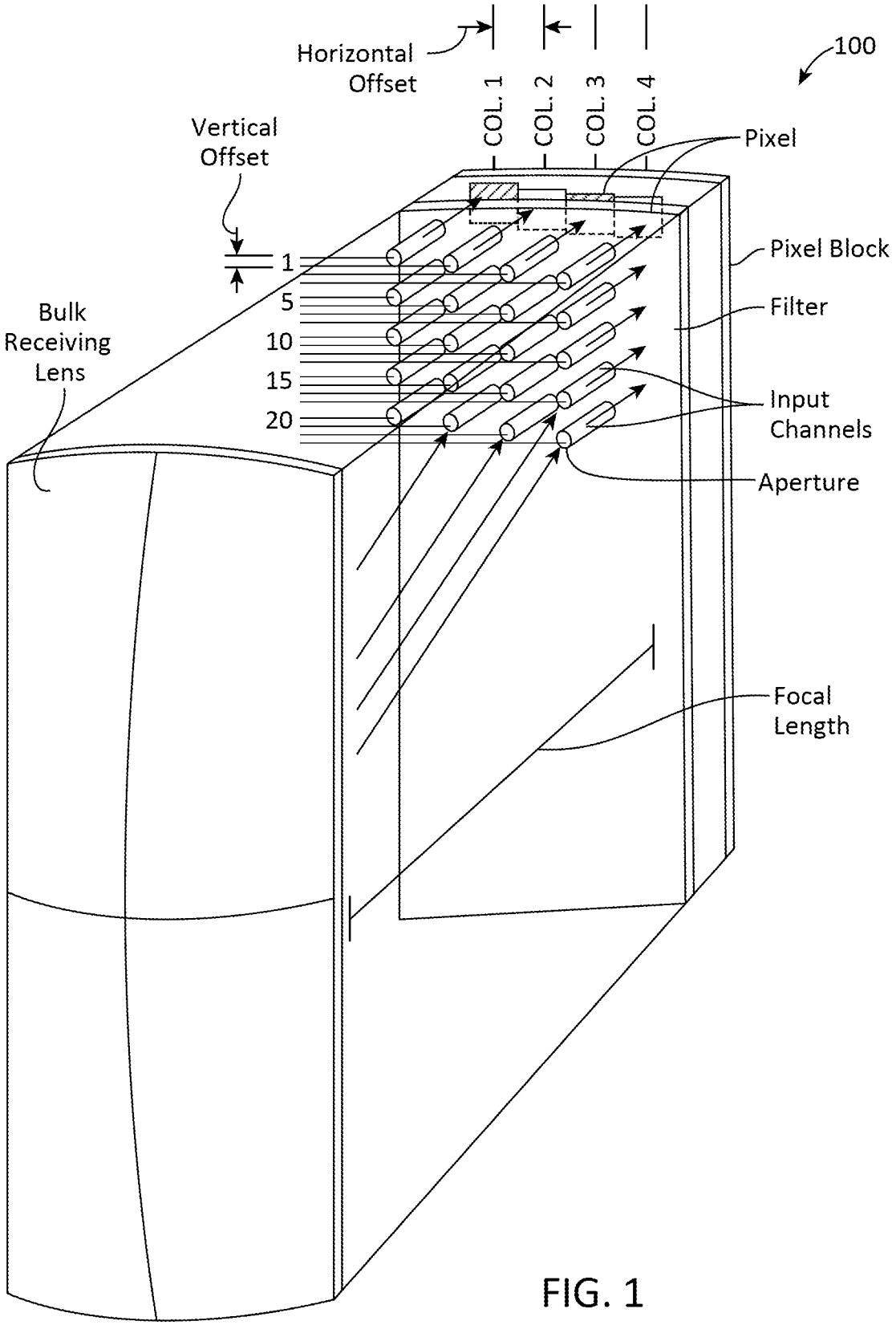
Horizontal Offset
100
COL. 1
COL. 2
COL. 3
COL. 4
Pixel
Vertical Offset
1
5
10
15
20
Pixel Block
Filter
Bulk Receiving Lens
Input Channels
Aperture
Focal Length

FIG. 1

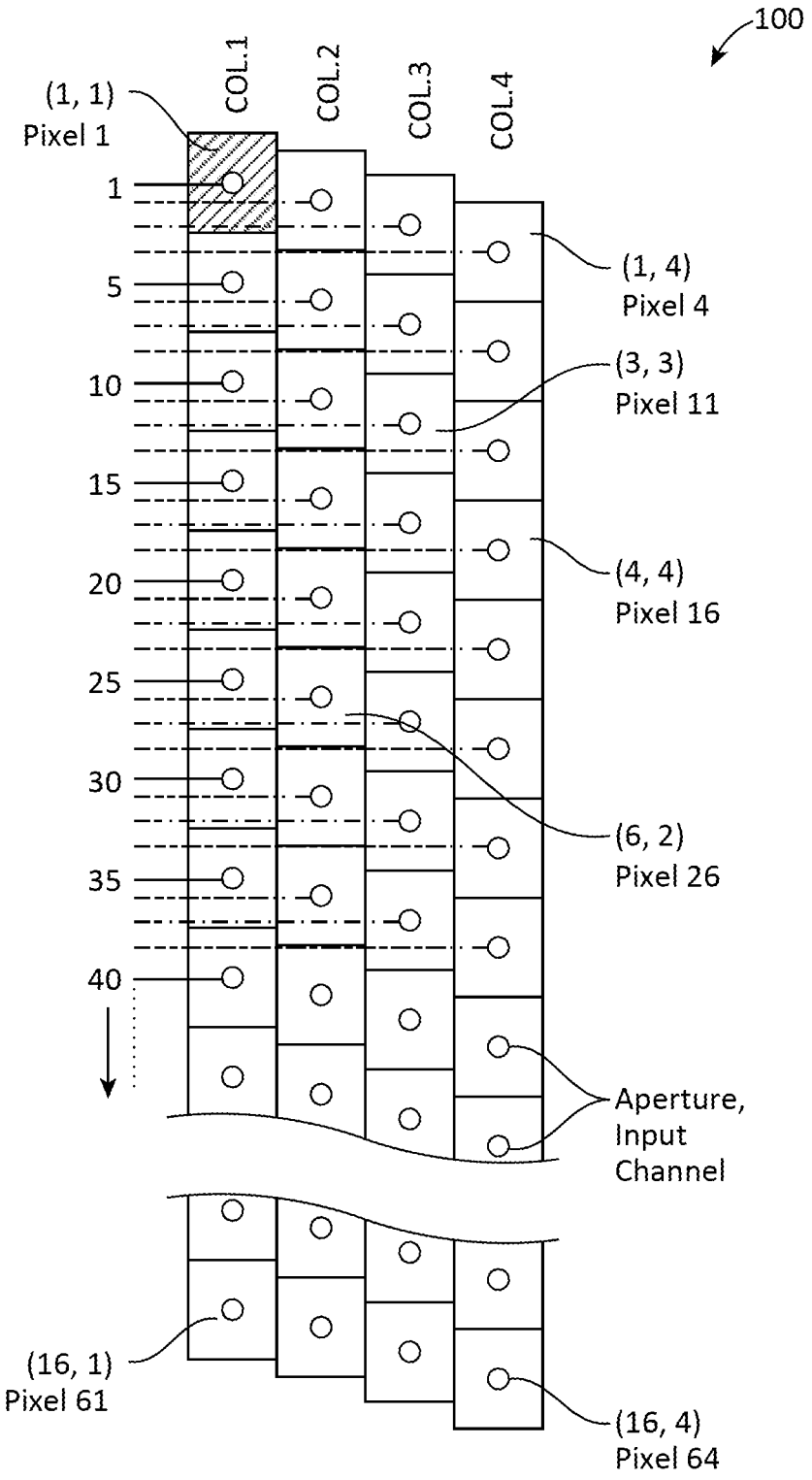
100
COL.1
COL.2
COL.3
COL.4
(1, 1)
Pixel 1
1
5
10
15
20
25
30
35
40
(1, 4)
Pixel 4
(3, 3)
Pixel 11
(4, 4)
Pixel 16
(6, 2)
Pixel 26
Aperture,
Input
Channel
(16, 1)
Pixel 61
(16, 4)
Pixel 64

FIG. 2

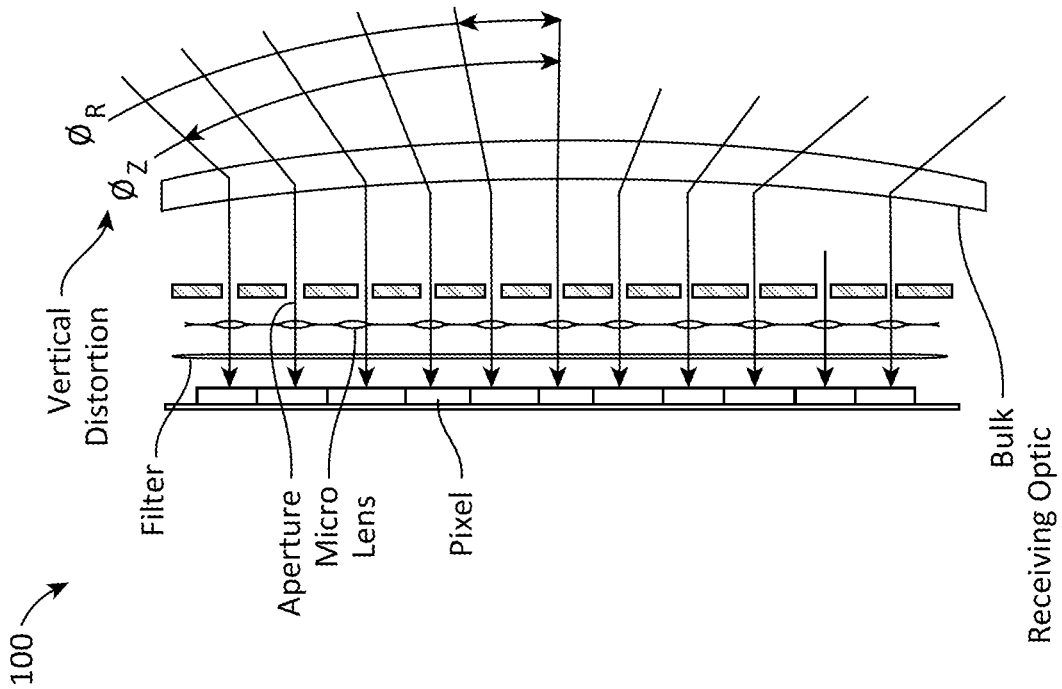
100
Vertical Distortion
Filter
Aperture
Micro Lens
Pixel
Bulk Receiving Optic
ϕ_Z
ϕ_R

FIG. 3B

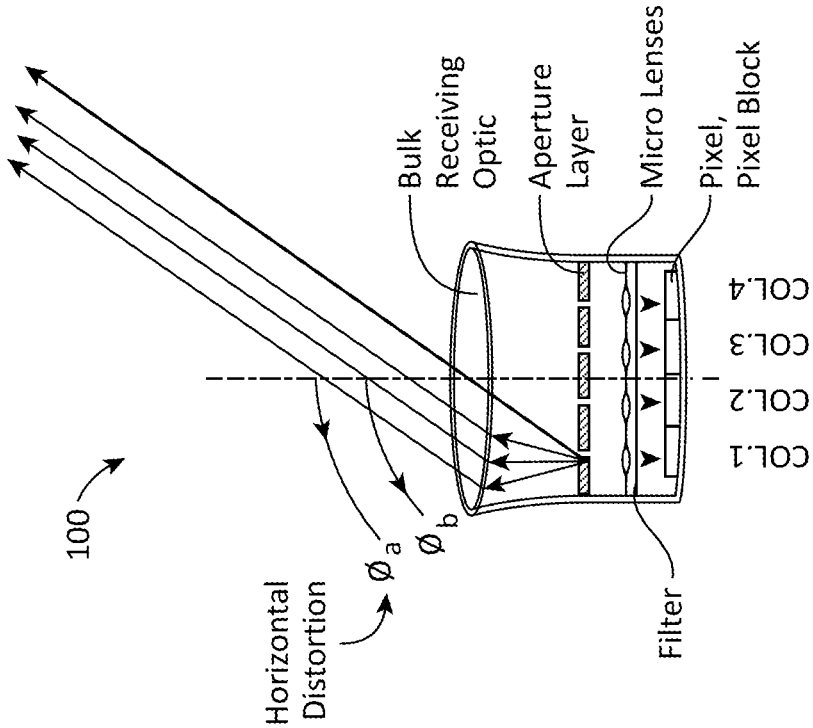
100
Horizontal Distortion
ϕ_a
ϕ_b
Filter
Bulk Receiving Optic
Aperture Layer
Micro Lenses
Pixel, Pixel Block
COL.1
COL.2
COL.3
COL.4

FIG. 3A

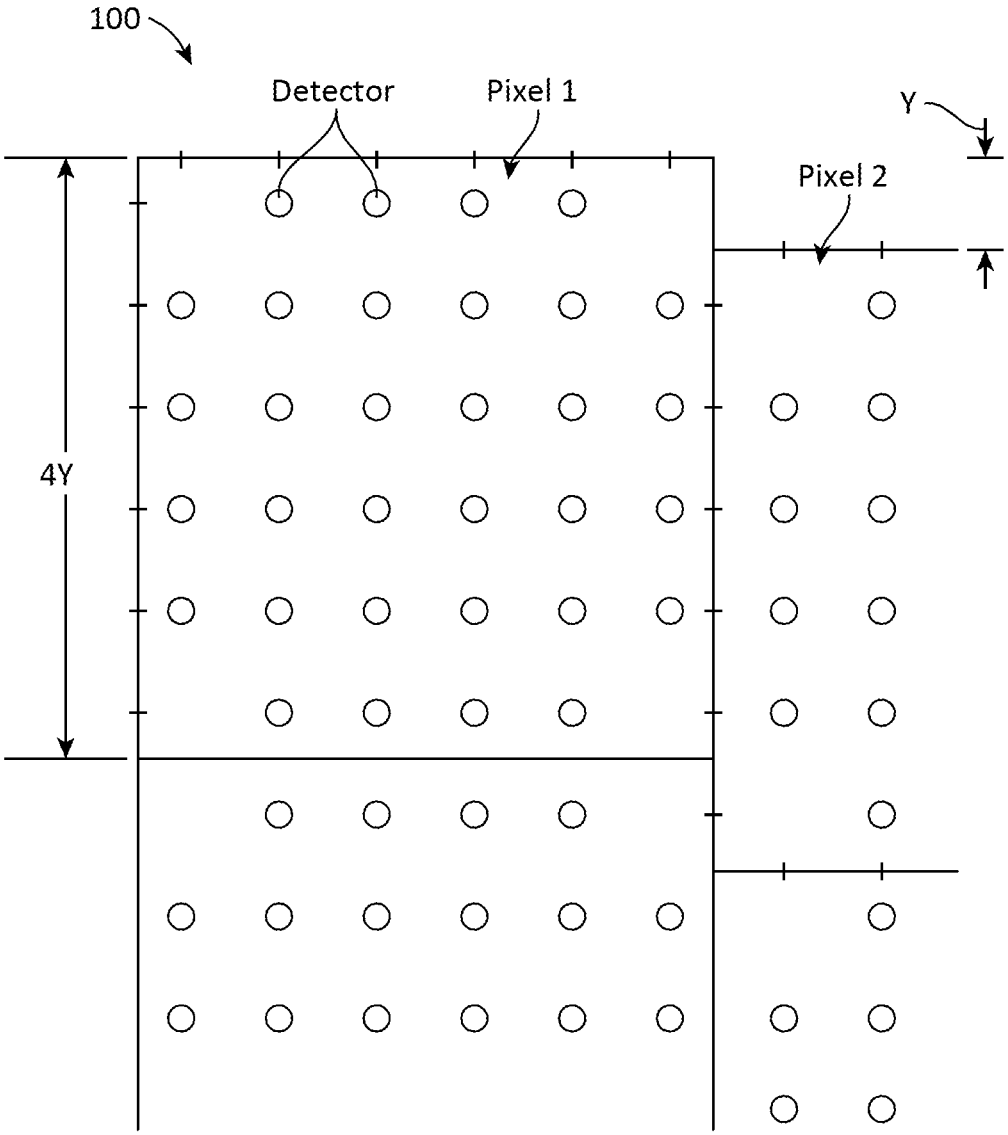

FIG. 4

Nominal Matrix @ 0° arcuate sampling position:

d(1,1) @0°	--	--	--	--	--	--	--
--	d(1,2) @0°	--	--	--	--	--	--
--	--	d(1,3) @0°	--	--	--	--	--
--	--	--	d(1,4) @0°	--	--	--	--
d(2,1) @0°	--	--	--	--	--	--	--
--	d(2,2) @0°	--	--	--	--	--	--
--	--	d(2,3) @0°	--	--	--	--	--
--	--	--	d(2,4) @0°	--	--	--	--
d(3,1) @0°	--	--	--	--	--	--	--
--	d(3,2) @0°	--	--	--	--	--	--
--	--	d(3,3) @0°	--	--	--	--	--
--	--	--	d(3,4) @0°	--	--	--	--
d(4,1) @0°	--	--	--	--	--	--	--
--	d(4,2) @0°	--	--	--	--	--	--
--	--	d(4,3) @0°	--	--	--	--	--
--	--	--	d(4,4) @0°	--	--	--	--
d(5,1) @0°	--	--	--	--	--	--	--
--	d(5,2) @0°	--	--	--	--	--	--
--	--	d(5,3) @0°	--	--	--	--	--
--	--	--	d(5,4) @0°	--	--	--	--
d(6,1) @0°	--	--	--	--	--	--	--
--	d(6,2) @0°	--	--	--	--	--	--
--	--	d(6,3) @0°	--	--	--	--	--
--	--	--	d(6,4) @0°	--	--	--	--
d(7,1) @0°	--	--	--	--	--	--	--
--	d(7,2) @0°	--	--	--	--	--	--
--	--	d(7,3) @0°	--	--	--	--	--
--	--	--	d(7,4) @0°	--	--	--	--
d(8,1) @0°	--	--	--	--	--	--	--
--	d(8,2) @0°	--	--	--	--	--	--
--	--	d(8,3) @0°	--	--	--	--	--
--	--	--	d(8,4) @0°	--	--	--	--
d(9,1) @0°	--	--	--	--	--	--	--
--	d(9,2) @0°	--	--	--	--	--	--

...

FIG. 5A1

--	--	d(9,3) @0°	--	--	--	--	--
--	--	--	d(9,4) @0°	--	--	--	--
d(10,1) @0°	--	--	--	--	--	--	--
--	d(10,2) @0°	--	--	--	--	--	--
--	--	d(10,3) @0°	--	--	--	--	--
--	--	--	d(10,4) @0°	--	--	--	--
d(11,1) @0°	--	--	--	--	--	--	--
--	d(11,2) @0°	--	--	--	--	--	--
--	--	d(11,3) @0°	--	--	--	--	--
--	--	--	d(11,4) @0°	--	--	--	--
d(12,1) @0°	--	--	--	--	--	--	--
--	d(12,2) @0°	--	--	--	--	--	--
--	--	d(12,3) @0°	--	--	--	--	--
--	--	--	d(12,4) @0°	--	--	--	--
d(13,1) @0°	--	--	--	--	--	--	--
--	d(13,2) @0°	--	--	--	--	--	--
--	--	d(13,3) @0°	--	--	--	--	--
--	--	--	d(13,4) @0°	--	--	--	--
d(14,1) @0°	--	--	--	--	--	--	--
--	d(14,2) @0°	--	--	--	--	--	--
--	--	d(14,3) @0°	--	--	--	--	--
--	--	--	d(14,4) @0°	--	--	--	--
d(15,1) @0°	--	--	--	--	--	--	--
--	d(15,2) @0°	--	--	--	--	--	--
--	--	d(15,3) @0°	--	--	--	--	--
--	--	--	d(15,4) @0°	--	--	--	--
d(16,1) @0°	--	--	--	--	--	--	--
--	d(16,2) @0°	--	--	--	--	--	--
--	--	d(16,3) @0°	--	--	--	--	--
--	--	--	d(16,4) @0°	--	--	--	--

FIG. 5A2

Nominal Matrix @ .176° arcuate sampling position:

d(1,1) @0°	d(1,1) @.176°	--	--	--	--	--	--
--	d(1,2) @0°	d(1,2) @.176°	--	--	--	--	--
--	--	d(1,3) @0°	d(1,3) @.176°	--	--	--	--
--	--	--	d(1,4) @0°	d(1,4) @.176°	--	--	--
d(2,1) @0°	d(2,1) @.176°	--	--	--	--	--	--
--	d(2,2) @0°	d(2,2) @.176°	--	--	--	--	--
--	--	d(2,3) @0°	d(2,3) @.176°	--	--	--	--
--	--	--	d(2,4) @0°	d(2,4) @.176°	--	--	--
d(3,1) @0°	d(3,1) @.176°	--	--	--	--	--	--
--	d(3,2) @0°	d(3,2) @.176°	--	--	--	--	--
--	--	d(3,3) @0°	d(3,3) @.176°	--	--	--	--
--	--	--	d(3,4) @0°	d(3,4) @.176°	--	--	--
d(4,1) @0°	d(4,1) @.176°	--	--	--	--	--	--
--	d(4,2) @0°	d(4,2) @.176°	--	--	--	--	--
--	--	d(4,3) @0°	d(4,3) @.176°	--	--	--	--
--	--	--	d(4,4) @0°	d(4,4) @.176°	--	--	--
d(5,1) @0°	d(5,1) @.176°	--	--	--	--	--	--
--	d(5,2) @0°	d(5,2) @.176°	--	--	--	--	--
--	--	d(5,3) @0°	d(5,3) @.176°	--	--	--	--
--	--	--	d(5,4) @0°	d(5,4) @.176°	--	--	--
d(6,1) @0°	d(6,1) @.176°	--	--	--	--	--	--
--	d(6,2) @0°	d(6,2) @.176°	--	--	--	--	--
--	--	d(6,3) @0°	d(6,3) @.176°	--	--	--	--
--	--	--	d(6,4) @0°	d(6,4) @.176°	--	--	--

FIG. 5B1

d(7,1) @0°	d(7,1) @.176°	--	--	--	--	--	--
--	d(7,2) @0°	d(7,2) @.176°	--	--	--	--	--
--	--	d(7,3) @0°	d(7,3) @.176°	--	--	--	--
--	--	--	d(7,4) @0°	d(7,4) @.176°	--	--	--
d(8,1) @0°	d(8,1) @.176°	--	--	--	--	--	--
--	d(8,2) @0°	d(8,2) @.176°	--	--	--	--	--
--	--	d(8,3) @0°	d(8,3) @.176°	--	--	--	--
--	--	--	d(8,4) @0°	d(8,4) @.176°	--	--	--
d(9,1) @0°	d(9,1) @.176°	--	--	--	--	--	--
--	d(9,2) @0°	d(9,2) @.176°	--	--	--	--	--
--	--	d(9,3) @0°	d(9,3) @.176°	--	--	--	--
--	--	--	d(9,4) @0°	d(9,4) @.176°	--	--	--
d(10,1) @0°	d(10,1) @.176°	--	--	--	--	--	--
--	d(10,2) @0°	d(10,2) @.176°	--	--	--	--	--
--	--	d(10,3) @0°	d(10,3) @.176°	--	--	--	--
--	--	--	d(10,4) @0°	d(10,4) @.176°	--	--	--
d(11,1) @0°	d(11,1) @.176°	--	--	--	--	--	--
--	d(11,2) @0°	d(11,2) @.176°	--	--	--	--	--
--	--	d(11,3) @0°	d(11,3) @.176°	--	--	--	--
--	--	--	d(11,4) @0°	d(11,4) @.176°	--	--	--
d(12,1) @0°	d(12,1) @.176°	--	--	--	--	--	--
--	d(12,2) @0°	d(12,2) @.176°	--	--	--	--	--
--	--	d(12,3) @0°	d(12,3) @.176°	--	--	--	--
--	--	--	d(12,4) @0°	d(12,4) @.176°	--	--	--

FIG. 5B2

d(13,1) @0°	d(13,1) @.176°	--	--	--	--	--	--	
--	d(13,2) @0°	d(13,2) @.176°	--	--	--	--	--	
--	--	d(13,3) @0°	d(13,3) @.176°	--	--	--	--	
--	--	--	d(13,4) @0°	d(13,4) @.176°	--	--	--	
d(14,1) @0°	d(14,1) @.176°	--	--	--	--	--	--	
--	d(14,2) @0°	d(14,2) @.176°	--	--	--	--	--	
--	--	d(14,3) @0°	d(14,3) @.176°	--	--	--	--	
--	--	--	d(14,4) @0°	d(14,4) @.176°	--	--	--	
d(15,1) @0°	d(15,1) @.176°	--	--	--	--	--	--	•••
--	d(15,2) @0°	d(15,2) @.176°	--	--	--	--	--	
--	--	d(15,3) @0°	d(15,3) @.176°	--	--	--	--	
--	--	--	d(15,4) @0°	d(15,4) @.176°	--	--	--	
d(16,1) @0°	d(16,1) @.176°	--	--	--	--	--	--	
--	d(16,2) @0°	d(16,2) @.176°	--	--	--	--	--	
--	--	d(16,3) @0°	d(16,3) @.176°	--	--	--	--	
--	--	--	d(16,4) @0°	d(16,4) @.176°	--	--	--	

FIG. 5B3

Nominal Matrix @ .352° arcuate sampling position:

d(1,1) @0°	d(1,1) @.176°	d(1,1) @.352°	--	--	--	--	--
--	d(1,2) @0°	d(1,2) @.176°	d(1,2) @.352°	--	--	--	--
--	--	d(1,3) @0°	d(1,3) @.176°	d(1,3) @.352°	--	--	--
--	--	--	d(1,4) @0°	d(1,4) @.176°	d(1,4) @.352°	--	--
d(2,1) @0°	d(2,1) @.176°	d(2,1) @.352°	--	--	--	--	--
--	d(2,2) @0°	d(2,2) @.176°	d(2,2) @.352°	--	--	--	--
--	--	d(2,3) @0°	d(2,3) @.176°	d(2,3) @.352°	--	--	--
--	--	--	d(2,4) @0°	d(2,4) @.176°	d(2,4) @.352°	--	--
d(3,1) @0°	d(3,1) @.176°	d(3,1) @.352°	--	--	--	--	--
--	d(3,2) @0°	d(3,2) @.176°	d(3,2) @.352°	--	--	--	--
--	--	d(3,3) @0°	d(3,3) @.176°	d(3,3) @.352°	--	--	--
--	--	--	d(3,4) @0°	d(3,4) @.176°	d(3,4) @.352°	--	--
d(4,1) @0°	d(4,1) @.176°	d(4,1) @.352°	--	--	--	--	--
--	d(4,2) @0°	d(4,2) @.176°	d(4,2) @.352°	--	--	--	--
--	--	d(4,3) @0°	d(4,3) @.176°	d(4,3) @.352°	--	--	--
--	--	--	d(4,4) @0°	d(4,4) @.176°	d(4,4) @.352°	--	--
d(5,1) @0°	d(5,1) @.176°	d(5,1) @.352°	--	--	--	--	--
--	d(5,2) @0°	d(5,2) @.176°	d(5,2) @.352°	--	--	--	--
--	--	d(5,3) @0°	d(5,3) @.176°	d(5,3) @.352°	--	--	--
--	--	--	d(5,4) @0°	d(5,4) @.176°	d(5,4) @.352°	--	--
d(6,1) @0°	d(6,1) @.176°	d(6,1) @.352°	--	--	--	--	--
--	d(6,2) @0°	d(6,2) @.176°	d(6,2) @.352°	--	--	--	--
--	--	d(6,3) @0°	d(6,3) @.176°	d(6,3) @.352°	--	--	--
--	--	--	d(6,4) @0°	d(6,4) @.176°	d(6,4) @.352°	--	--
d(7,1) @0°	d(7,1) @.176°	d(7,1) @.352°	--	--	--	--	--
--	d(7,2) @0°	d(7,2) @.176°	d(7,2) @.352°	--	--	--	--
--	--	d(7,3) @0°	d(7,3) @.176°	d(7,3) @.352°	--	--	--
--	--	--	d(7,4) @0°	d(7,4) @.176°	d(7,4) @.352°	--	--

FIG. 5C1

d(8,1) @0°	d(8,1) @.176°	d(8,1) @.352°	--	--	--	--	--
--	d(8,2) @0°	d(8,2) @.176°	d(8,2) @.352°	--	--	--	--
--	--	d(8,3) @0°	d(8,3) @.176°	d(8,3) @.352°	--	--	--
--	--	--	d(8,4) @0°	d(8,4) @.176°	d(8,4) @.352°	--	--
d(9,1) @0°	d(9,1) @.176°	d(9,1) @.352°	--	--	--	--	--
--	d(9,2) @0°	d(9,2) @.176°	d(9,2) @.352°	--	--	--	--
--	--	d(9,3) @0°	d(9,3) @.176°	d(9,3) @.352°	--	--	--
--	--	--	d(9,4) @0°	d(9,4) @.176°	d(9,4) @.352°	--	--
d(10,1) @0°	d(10,1) @.176°	d(10,1) @.352°	--	--	--	--	--
--	d(10,2) @0°	d(10,2) @.176°	d(10,2) @.352°	--	--	--	--
--	--	d(10,3) @0°	d(10,3) @.176°	d(10,3) @.352°	--	--	--
--	--	--	d(10,4) @0°	d(10,4) @.176°	d(10,4) @.352°	--	--
d(11,1) @0°	d(11,1) @.176°	d(11,1) @.352°	--	--	--	--	--
--	d(11,2) @0°	d(11,2) @.176°	d(11,2) @.352°	--	--	--	--
--	--	d(11,3) @0°	d(11,3) @.176°	d(11,3) @.352°	--	--	--
--	--	--	d(11,4) @0°	d(11,4) @.176°	d(11,4) @.352°	--	--
d(12,1) @0°	d(12,1) @.176°	d(12,1) @.352°	--	--	--	--	--
--	d(12,2) @0°	d(12,2) @.176°	d(12,2) @.352°	--	--	--	--
--	--	d(12,3) @0°	d(12,3) @.176°	d(12,3) @.352°	--	--	--
--	--	--	d(12,4) @0°	d(12,4) @.176°	d(12,4) @.352°	--	--

FIG. 5C2

d(13,1) @0°	d(13,1) @.176°	d(13,1) @.352°	--	--	--	--	--
--	d(13,2) @0°	d(13,2) @.176°	d(13,2) @.352°	--	--	--	--
--	--	d(13,3) @0°	d(13,3) @.176°	d(13,3) @.352°	--	--	--
--	--	--	d(13,4) @0°	d(13,4) @.176°	d(13,4) @.352°	--	--
d(14,1) @0°	d(14,1) @.176°	d(14,1) @.352°	--	--	--	--	--
--	d(14,2) @0°	d(14,2) @.176°	d(14,2) @.352°	--	--	--	--
--	--	d(14,3) @0°	d(14,3) @.176°	d(14,3) @.352°	--	--	--
--	--	--	d(14,4) @0°	d(14,4) @.176°	d(14,4) @.352°	--	--
d(15,1) @0°	d(15,1) @.176°	d(15,1) @.352°	--	--	--	--	--
--	d(15,2) @0°	d(15,2) @.176°	d(15,2) @.352°	--	--	--	--
--	--	d(15,3) @0°	d(15,3) @.176°	d(15,3) @.352°	--	--	--
--	--	--	d(15,4) @0°	d(15,4) @.176°	d(15,4) @.352°	--	--
d(16,1) @0°	d(16,1) @.176°	d(16,1) @.352°	--	--	--	--	--
--	d(16,2) @0°	d(16,2) @.176°	d(16,2) @.352°	--	--	--	--
--	--	d(16,3) @0°	d(16,3) @.176°	d(16,3) @.352°	--	--	--
--	--	--	d(16,4) @0°	d(16,4) @.176°	d(16,4) @.352°	--	--

FIG. 5C3

Nominal Matrix @ .528° arcuate sampling position:

d(1,1) @0°	d(1,1) @.176°	d(1,1) @.352°	d(1,1) @.528°	--	--	--	--
--	d(1,2) @0°	d(1,2) @.176°	d(1,2) @.352°	d(1,2) @.528°	--	--	--
--	--	d(1,3) @0°	d(1,3) @.176°	d(1,3) @.352°	d(1,3) @.528°	--	--
--	--	--	d(1,4) @0°	d(1,4) @.176°	d(1,4) @.352°	d(1,4) @.528°	--
d(2,1) @0°	d(2,1) @.176°	d(2,1) @.352°	d(2,1) @.528°	--	--	--	--
--	d(2,2) @0°	d(2,2) @.176°	d(2,2) @.352°	d(2,2) @.528°	--	--	--
--	--	d(2,3) @0°	d(2,3) @.176°	d(2,3) @.352°	d(2,3) @.528°	--	--
--	--	--	d(2,4) @0°	d(2,4) @.176°	d(2,4) @.352°	d(2,4) @.528°	--
d(3,1) @0°	d(3,1) @.176°	d(3,1) @.352°	d(3,1) @.528°	--	--	--	--
--	d(3,2) @0°	d(3,2) @.176°	d(3,2) @.352°	d(3,2) @.528°	--	--	--
--	--	d(3,3) @0°	d(3,3) @.176°	d(3,3) @.352°	d(3,3) @.528°	--	--
--	--	--	d(3,4) @0°	d(3,4) @.176°	d(3,4) @.352°	d(3,4) @.528°	--
d(4,1) @0°	d(4,1) @.176°	d(4,1) @.352°	d(4,1) @.528°	--	--	--	--
--	d(4,2) @0°	d(4,2) @.176°	d(4,2) @.352°	d(4,2) @.528°	--	--	--
--	--	d(4,3) @0°	d(4,3) @.176°	d(4,3) @.352°	d(4,3) @.528°	--	--
--	--	--	d(4,4) @0°	d(4,4) @.176°	d(4,4) @.352°	d(4,4) @.528°	--
d(5,1) @0°	d(5,1) @.176°	d(5,1) @.352°	d(5,1) @.528°	--	--	--	--
--	d(5,2) @0°	d(5,2) @.176°	d(5,2) @.352°	d(5,2) @.528°	--	--	--
--	--	d(5,3) @0°	d(5,3) @.176°	d(5,3) @.352°	d(5,3) @.528°	--	--
--	--	--	d(5,4) @0°	d(5,4) @.176°	d(5,4) @.352°	d(5,4) @.528°	--
d(6,1) @0°	d(6,1) @.176°	d(6,1) @.352°	d(6,1) @.528°	--	--	--	--
--	d(6,2) @0°	d(6,2) @.176°	d(6,2) @.352°	d(6,2) @.528°	--	--	--
--	--	d(6,3) @0°	d(6,3) @.176°	d(6,3) @.352°	d(6,3) @.528°	--	--
--	--	--	d(6,4) @0°	d(6,4) @.176°	d(6,4) @.352°	d(6,4) @.528°	--
d(7,1) @0°	d(7,1) @.176°	d(7,1) @.352°	d(7,1) @.528°	--	--	--	--
--	d(7,2) @0°	d(7,2) @.176°	d(7,2) @.352°	d(7,2) @.528°	--	--	--
--	--	d(7,3) @0°	d(7,3) @.176°	d(7,3) @.352°	d(7,3) @.528°	--	--
--	--	--	d(7,4) @0°	d(7,4) @.176°	d(7,4) @.352°	d(7,4) @.528°	--

FIG. 5D1

d(8,1) @0°	d(8,1) @.176°	d(8,1) @.352°	d(8,1) @.528°	--	--	--	--
--	d(8,2) @0°	d(8,2) @.176°	d(8,2) @.352°	d(8,2) @.528°	--	--	--
--	--	d(8,3) @0°	d(8,3) @.176°	d(8,3) @.352°	d(8,3) @.528°	--	--
--	--	--	d(8,4) @0°	d(8,4) @.176°	d(8,4) @.352°	d(8,4) @.528°	--
d(9,1) @0°	d(9,1) @.176°	d(9,1) @.352°	d(9,1) @.528°	--	--	--	--
--	d(9,2) @0°	d(9,2) @.176°	d(9,2) @.352°	d(9,2) @.528°	--	--	--
--	--	d(9,3) @0°	d(9,3) @.176°	d(9,3) @.352°	d(9,3) @.528°	--	--
--	--	--	d(9,4) @0°	d(9,4) @.176°	d(9,4) @.352°	d(9,4) @.528°	--
d(10,1) @0°	d(10,1) @.176°	d(10,1) @.352°	d(10,1) @.528°	--	--	--	--
--	d(10,2) @0°	d(10,2) @.176°	d(10,2) @.352°	d(10,2) @.528°	--	--	--
--	--	d(10,3) @0°	d(10,3) @.176°	d(10,3) @.352°	d(10,3) @.528°	--	--
--	--	--	d(10,4) @0°	d(10,4) @.176°	d(10,4) @.352°	d(10,4) @.528°	--
d(11,1) @0°	d(11,1) @.176°	d(11,1) @.352°	d(11,1) @.528°	--	--	--	--
--	d(11,2) @0°	d(11,2) @.176°	d(11,2) @.352°	d(11,2) @.528°	--	--	--
--	--	d(11,3) @0°	d(11,3) @.176°	d(11,3) @.352°	d(11,3) @.528°	--	--
--	--	--	d(11,4) @0°	d(11,4) @.176°	d(11,4) @.352°	d(11,4) @.528°	--
d(12,1) @0°	d(12,1) @.176°	d(12,1) @.352°	d(12,1) @.528°	--	--	--	--
--	d(12,2) @0°	d(12,2) @.176°	d(12,2) @.352°	d(12,2) @.528°	--	--	--
--	--	d(12,3) @0°	d(12,3) @.176°	d(12,3) @.352°	d(12,3) @.528°	--	--
--	--	--	d(12,4) @0°	d(12,4) @.176°	d(12,4) @.352°	d(12,4) @.528°	--

FIG. 5D2

d(13,1) @0°	d(13,1) @.176°	d(13,1) @.352°	d(13,1) @.528°	--	--	--	--
--	d(13,2) @0°	d(13,2) @.176°	d(13,2) @.352°	d(13,2) @.528°	--	--	--
--	--	d(13,3) @0°	d(13,3) @.176°	d(13,3) @.352°	d(13,3) @.528°	--	--
--	--	--	d(13,4) @0°	d(13,4) @.176°	d(13,4) @.352°	d(13,4) @.528°	--
d(14,1) @0°	d(14,1) @.176°	d(14,1) @.352°	d(14,1) @.528°	--	--	--	--
--	d(14,2) @0°	d(14,2) @.176°	d(14,2) @.352°	d(14,2) @.528°	--	--	--
--	--	d(14,3) @0°	d(14,3) @.176°	d(14,3) @.352°	d(14,3) @.528°	--	--
--	--	--	d(14,4) @0°	d(14,4) @.176°	d(14,4) @.352°	d(14,4) @.528°	--
d(15,1) @0°	d(15,1) @.176°	d(15,1) @.352°	d(15,1) @.528°	--	--	--	--
--	d(15,2) @0°	d(15,2) @.176°	d(15,2) @.352°	d(15,2) @.528°	--	--	--
--	--	d(15,3) @0°	d(15,3) @.176°	d(15,3) @.352°	d(15,3) @.528°	--	--
--	--	--	d(15,4) @0°	d(15,4) @.176°	d(15,4) @.352°	d(15,4) @.528°	--
d(16,1) @0°	d(16,1) @.176°	d(16,1) @.352°	d(16,1) @.528°	--	--	--	--
--	d(16,2) @0°	d(16,2) @.176°	d(16,2) @.352°	d(16,2) @.528°	--	--	--
--	--	d(16,3) @0°	d(16,3) @.176°	d(16,3) @.352°	d(16,3) @.528°	--	--
--	--	--	d(16,4) @0°	d(16,4) @.176°	d(16,4) @.352°	d(16,4) @.528°	--

FIG. 5D3

OPTICAL SYSTEM FOR COLLECTING DISTANCE INFORMATION WITHIN A FIELD

CROSS-REFERENCE TO RELATED PATENT APPLICATION

This application is a continuation of U.S. patent application Ser. No. 17/194,068 filed, Mar. 5, 2021, which is a continuation of U.S. patent application Ser. No. 15/685,384, filed Aug. 24, 2017, which claims the benefit and priority to U.S. Provisional Application 62/379,130, filed on Aug. 24, 2016. The contents of each of the Ser. No. 17/194,068, 15/685,384 and 62/379,130 applications are incorporated by reference herein for all purposes.

TECHNICAL FIELD

This invention relates generally to the field of optical sensors and more specifically to a new and useful system optical system for collecting distance information in the field of optical sensors.

BACKGROUND

Light detection and ranging (LiDAR) systems have been used in a wide range of applications, e.g., agriculture, forest planning and management, environmental assessment, survey, mapping, imaging, and vehicle automation etc. Unlike cameras, LiDAR systems can be operated at night and under any weather. Further, LiDAR systems are not affected by low sun angles, and can provide distance contours directly based upon returned lights from illuminated objects.

However, it remains a challenge to provide 2D or 3D distance information with higher precision, lower costs and faster results.

SUMMARY

Systems and methods in accordance with various examples of the present disclosure provide a solution to the above-mentioned problems. An example optical system for collecting distance information comprises a bulk receiving optic configured to collect illumination beams of a plurality of illumination sources reflected from a field outside the optical system; a pixel array comprising at least a first column of pixels and a second column of pixels, each pixel in the first column of pixels being offset from an adjacent pixel in the first column of pixels by a first pixel pitch, the second column of pixels being horizontally offset from the first column of pixels by the first pixel pitch, the second column of pixels being vertically offset from the first column of pixels by a first vertical pitch; and a set of input channels interposed between the first transmitting bulk receiving optic and the pixel array, the set of input channels comprising at least a first plurality of input channels and a second plurality of input channels, each of the first plurality of input channels configured to communicate one of the collected illumination beams from the first transmitting bulk receiving optic to a corresponding pixel in the first column of pixels, each of the second plurality of input channels configured to communicate one of the collected illumination beams from the bulk receiving optic to a corresponding pixel in the second column of pixels.

In one aspect of the present disclosure, the bulk receiving optic has a first focal length and defines a focal plane opposite the field. The set of input channels comprise an

aperture layer disposed substantially coincident the focal plane, the aperture layer comprising a set of apertures that comprises at least a first plurality of apertures and a second plurality of apertures; a set of lens, the set of lens comprising at least a first plurality of lens and a second plurality of lens, each of the first plurality of lens corresponding to one of the first plurality of apertures, each of the second plurality of lens corresponding to one of the second plurality of apertures; and an optical filter disposed adjacent to the set of lens and opposite the set of apertures.

In another aspect of the present disclosure, each input channel in the set of input channels is coaxial with a corresponding pixel in the pixel array such that the set of input channels is positioned in a skewed grid array substantially similar to the pixel array.

In yet another aspect of the present disclosure, each input channel in the set of input channels comprises a lens in the set of lens and a corresponding aperture in the set of apertures, the lens being substantially aligned with the corresponding aperture.

In yet another aspect of the present disclosure, each of the set of lens has a second focal length, and is configured to offset the focal plane opposite the bulk receiving optic by the second focal length and collimate light rays having wavelengths substantially equivalent to an operating wavelength of the optical system.

In yet another aspect of the present disclosure, the optical system further comprises a second transmitting bulk transmitting optic. The plurality of illumination sources is positioned along a focal plane of the second transmitting bulk transmitting optic, each illumination beam projected by the second transmitting bulk transmitting optic having substantially the same size and geometry as a field of view of a corresponding input channel in the set of input channels.

In yet another aspect of the present disclosure, the aperture layer is separately fabricated by selectively metallizing a glass wafer and etching the set of apertures into metallized glass wafer.

In yet another aspect of the present disclosure, the pixel array is integrated on a semiconductor wafer. The bulk receiving optic and the set of input channels are fabricated on the semiconductor wafer using at least one of photolithography technique or wafer-level bond technique.

In yet another aspect of the present disclosure, the fix first pixel pitch is n times of the first vertical pitch, in which n is a positive integer.

In yet another aspect of the present disclosure, the optical system further comprises an actuator configured to rotate the pixel array, the set of input channels and the bulk receiving optic around a vertical axis. The actuator comprises a rotary electric motor and an optical encoder, the rotary electric motor configured to control a rotational speed of the pixel array, the set of input channels and the bulk receiving optic based upon outputs of the optical encoder, the optical encoder coupled to the pixel array via a closed-loop feedback circuit.

An example method of making an optical system for collecting distance information comprises providing a bulk receiving optic configured to collect illumination beams of a plurality of illumination sources reflected from a field outside the optical system; providing a pixel array that comprises at least a first column of pixels and a second column of pixels, each pixel in the first column of pixels being offset from an adjacent pixel in the first column of pixels by a first pixel pitch, the second column of pixels being horizontally offset from the first column of pixels by the first pixel pitch, the second column of pixels being

vertically offset from the first column of pixels by a first vertical pitch; and positioning a set of input channels interposed between the bulk receiving optic and the pixel array, the set of input channels comprising at least a first plurality of input channels and a second plurality of input channels, each of the first plurality of input channels configured to communicate one of collected illumination beams from the first transmitting bulk receiving optic to a corresponding pixel in the first column of pixels, each of the second plurality of input channels configured to communicate one of the collected illumination beams from the bulk receiving optic to a corresponding pixel in the second column of pixels.

An example method of collecting distance information comprises using an optical system that has a bulk receiving optic configured to collect reflected illumination beams of a plurality of illumination sources from a field outside the optical system; a pixel array comprising at least a first column of pixels and a second column of pixels, each pixel in the first column of pixels being offset from an adjacent pixel in the first column of pixels by a first pixel pitch, the second column of pixels being horizontally offset from the first column of pixels by the first pixel pitch, the second column of pixels being vertically offset from the first column of pixels by a first vertical pitch; and a set of input channels interposed between the first transmitting bulk receiving optic and the pixel array, the set of input channels comprising at least a first plurality of input channels and a second plurality of input channels, each of the first plurality of input channels configured to communicate one of collected illumination beams from the first transmitting bulk receiving optic to a corresponding pixel in the first column of pixels, each of the second plurality of input channels configured to communicate one of the collected illumination beams from the first transmitting bulk receiving optic to a corresponding pixel in the second column of pixels.

An example method of collecting distance information comprises providing an optical system that has a bulk receiving optic configured to collect reflected illumination beams of a plurality of illumination sources from a field outside the optical system; a pixel array comprising at least a first column of pixels and a second column of pixels, each pixel in the first column of pixels being offset from an adjacent pixel in the first column of pixels by a first pixel pitch, the second column of pixels being horizontally offset from the first column of pixels by the first pixel pitch, the second column of pixels being vertically offset from the first column of pixels by a first vertical pitch; and a set of input channels interposed between the bulk receiving optic and the pixel array, the set of input channels comprising at least a first plurality of input channels and a second plurality of input channels, each of the first plurality of input channels configured to communicate one of collected illumination beams from the bulk receiving optic to a corresponding pixel in the first column of pixels, each of the second plurality of input channels configured to communicate one of the collected illumination beams from the bulk receiving optic to a corresponding pixel in the second column of pixels.

BRIEF DESCRIPTION OF THE FIGURES

FIG. **1** is a schematic representation of a system;

FIG. **2** is a schematic representation of one variation of the system;

FIGS. **3**A and **3**B are graphical representations of one variation of the system;

FIG. **4** is a schematic representation of one variation of the system; and

FIGS. **5**A**1**-**5**A**2**, **5**B**1**-**5**B**3**, **5**C**1**-**5**C**3**, and **5**D**1**-**5**D**3** are graphical representations of one variation of the system.

DESCRIPTION OF THE EMBODIMENTS

The following description of embodiments of the invention is not intended to limit the invention to these embodiments but rather to enable a person skilled in the art to make and use this invention. Variations, configurations, implementations, example implementations, and examples described herein are optional and are not exclusive to the variations, configurations, implementations, example implementations, and examples they describe. The invention described herein can include any and all permutations of these variations, configurations, implementations, example implementations, and examples.

1. System

As shown in FIGS. **1** and **2**, a system for collecting distance information within a field includes: a bulk receiving optic; a pixel block; a first set of input channels; and a second set of input channels. The pixel block includes: a first column of pixels, each pixel in the first column vertically offset from an adjacent pixel in the first column by a pixel pitch; and a second column of pixels horizontally offset from the first column by the pixel pitch and vertically offset from the first column by a vertical pitch, each pixel in the second column vertically offset from an adjacent pixel in the second column by the pixel pitch, the vertical pitch comprising a fraction of the pixel pitch. The first set of input channels interposed between the bulk receiving optic and the pixel block, each input channel in the first set of input channels configured to communicate light incident from the bulk receiving optic to a corresponding pixel in the first column of pixels. The second set of input channels horizontally offset from the set of input channels and interposed between the bulk receiving optic and the pixel block, each input channel in the second set of input channels configured to communicate light incident from the bulk receiving optic to a corresponding pixel in the second column of pixels.

2. Applications

The system functions as an image sensor that, when rotated about an axis parallel to a column of pixels, collects three-dimensional distance data of a volume occupied by the system. In particular, during operation, the system can collect three-dimensional distance data over each of a sequence of scan cycles and can reconstruct these into a virtual three-dimensional representation of the volume occupied by the system, such as based on recorded times between transmission of an illuminating beam from an illumination source and detection of photons at the same or similar frequency or temporal patter at each pixel or by implementing phase-based measurement techniques.

The system includes two or more columns of pixels in a skewed grid array layout, wherein adjacent columns of pixels are vertically and horizontally offset such that the set of pixels project onto a single vertical column of pixels with one pixel per row. The system also includes one input channel per pixel, and the input channels pass light from a common bulk receiving optic to their corresponding pixels. The system can also include an actuator that rotates the pixel block, the input channels, and the bulk receiving optic about

a vertical axis such that each pixel (and each corresponding input channel) traverses a unique circular path parallel to and vertically offset from a unique circular path traversed by each other pixel in the system during a single rotation of the rotary actuator (hereinafter a "scan cycle"). The system can collect data from each pixel at each of multiple arcuate sampling positions within one scan cycle and combine these data collected from multiple columns of pixels into a single vertical column of distances—to external surfaces within (approximately) a single vertical plane coincident the axis of rotation of the system—for each arcuate sampling period within the scan cycle. Therefore, the system can output data (e.g., distance values) in a format substantially similar to data output by a similar scanning system including only a single column of pixels. However, because the system includes multiple vertically- and horizontally-offset columns of pixels, each pixel in the system can define a greater height—and therefore include a greater number of detectors and exhibit a greater dynamic range—than a pixel in the similar scanning system of approximately the same overall height and including the same number of pixels at the same effective (vertical) pixel pitch.

The system can output a matrix of range values per scan cycle, wherein all range values in one row of the matrix correspond to outputs of one specific pixel in the pixel block, and wherein each range value in one row of the matrix corresponds to an output of the corresponding pixel at a unique angular position of the sensor block within one scan cycle. Because adjacent pixels columns in the system are horizontally and vertically offset from one another, the system populates each row of a matrix for a scan cycle with one range value at a time (i.e., per target angular sampling position) rather than simultaneously. Horizontal and vertical offset between adjacent columns of pixels also enables each pixel in the system to span a greater area (and thus include more detectors) for a given effective vertical pitch of the system, thereby yielding a relatively large ratio of dynamic range to size of the optical system. Furthermore, though the area of each pixel on the pixel block spans a relatively large area, each pixel is paired with an input channel including an aperture that constrains the field of view of the pixel such that the pixel retains relatively high spatial selectivity. Therefore, the system can include horizontally and vertically offset columns of pixels and corresponding input channels that enable: high dynamic range through large pixel areas; high spatial selectivity through small fields of view for each pixel; and high resolution through small effective pixel vertical pitch within a compact system.

3. Pixel

The system includes multiple pixels, and each pixel can include one or more detectors configured to detect incident light. For example, a pixel can output a count of incident photons, a time between incident photons, a time of incident photons (e.g., relative to an illumination output time), or other relevant data, and the system can transform these data into distances from the system to external surfaces in the fields of view of these pixels. By merging these distances with the position of pixels at which these data originated and relative positions of these pixels at a time that these data were collected, the system (or other device accessing these data) can reconstruct a three-dimensional (virtual or mathematical) model of a space occupied by the system, such as in the form of 3D image represented by a rectangular matrix of range values, wherein each range value in the matrix corresponds to a polar coordinate in 3D space.

Each detector within a pixel can be configured to detect a single photon per sampling period. A pixel can thus include multiple detectors in order to increase the dynamic range of the pixel; in particular, the dynamic range of the pixel (and therefore of the system) can increase as a number of detectors integrated into each pixel increases, and the number of detectors that can be integrated into a pixel can scale linearly with the area of the pixel. For example, a pixel can include an array of single-photon avalanche diode detectors ("SPADs"), such as 32 detectors on a 6×6 grid array less one detector in each of four corners, as shown in FIG. **4**. For detectors ten microns in diameter, the pixel can define a footprint approximately 400 microns square. However, the system can include any other type of pixel including any other number of detectors.

4. Pixel Pattern

The system includes a pixel block including: a first column of pixels, each pixel in the first column vertically offset from an adjacent pixel in the first column by a pixel pitch; and a second column of pixels horizontally offset from the first column by the pixel pitch and vertically offset from the first column by a vertical pitch, each pixel in the second column vertically offset from an adjacent pixel in the second column by the pixel pitch, the vertical pitch comprising a fraction of the pixel pitch. Generally, the pixel block includes multiple rows and columns of pixels in a skewed grid array, wherein each column includes multiple pixels vertically aligned, and wherein each row corresponds to a unique vertical distance from the nominal axis of the bulk receiving optic and includes a single pixel, as shown in FIGS. **1**, **2**, and **4**. In particular, the pixel block can include multiple columns of pixels laterally and vertically offset—compared to a single column of pixels—to enable each pixel to be taller and wider—thereby enabling each pixel to include a greater number of detectors and increasing the dynamic range of the system—without necessitating a taller pixel block to accommodate such greater vertical pitch between pixels.

In one implementation, the pixel block and pixels are integrated into a singular integrated circuit. For example, the pixel block and pixels can be defined in a single application-specific integrated circuit (or "ASIC"). In this example, each input channel can include an aperture that limits the field of view of a corresponding pixel on the ASIC in order to achieve greater spatial selectivity for the pixel.

4.1 Pixel Pattern: 32×2:

In one configuration, the system includes two columns of pixels, such as a 32×2 array of pixels and a corresponding 32×2 array of input channels that share a common bulk receiving optic. In this configuration, the system may exhibit a bulk resolution identical to that of a single-column system including the same number of pixels arranged on a pixel block of approximately the same height at the same effective vertical pixel pitch, but the two-column system may exhibit greater dynamic range than the single-column system. In particular, pixels in both a first column and a second column of the two-column system can be offset vertically by a second vertical pitch double a first vertical pitch of the single-column system (e.g., 200 microns versus 100 microns), and the second column of pixels can be offset vertically from the first column of pixels by half of the second virtual pitch, thereby providing space in the two-column system for pixels twice the height of pixels in the single-column system given the same number of pixels arranged on a pixel block of approximately the same height.

Therefore, for square pixels, each pixel in the two-column system can define an area approximately four times that of a pixel in the single-column system, can thus include approximately four times the number of detectors as a pixel in the single-column system, and can thus exhibit approximately four times the dynamic range of a pixel in the single-column system. For example, for a pixel block approximately 640 microns tall and including 64 pixels (i.e., a 100-micron vertical pitch): the single-column system can include 64 100-micron-square pixels, each pixel including four 50-micron-wide detectors; and the two-column system can include a first column of 32 200-micron-square pixels and a second column of 32 200-micron-square pixels, each pixel including eight 50-micron-wide detectors.

However, because the two-column system includes two columns of pixels, wherein both columns are horizontally offset from a horizontal center of the system (i.e., a y-axis of the pixel block), pixels in the first column can exhibit fields of view angularly offset—in the horizontal plane—from fields of view of pixels in the second column. Thus, the fields of view of pixels in the first column can be offset laterally from fields of view of pixels in the second column by greater amounts at increasing distances from the system. Horizontal offset between the two columns of pixels that share the same bulk receiving optic can thus manifest as angular offset—in a horizontal plane—between the fields of view of the first column of pixels and the fields of view of the second column of pixels (hereinafter "horizontal distortion").

Furthermore, such horizontal distortion may not be uniform across pixels in one pixel column. In particular, the field of view of a pixel in the first pixel column can be angularly offset from a center (e.g., normal) axis of the bulk lens as a function of distance of the pixel from the center axis of the bulk optic such that a pixel at the bottom of the first pixel column exhibits a maximum negative angular offset in the horizontal plane and such that a pixel at the top of the first pixel column exhibits a similar maximum positive angular offset in the horizontal plane. However, the system can compensate for such variations in horizontal offset angles (e.g., "yaw" angles) of fields of view of pixels in each column in a correction matrix, as described below.

4.2 Pixel Pattern: 16×4:

In another configuration shown in FIGS. **1** and **2**, the system includes four columns of pixels, such as a 16×4 array of pixels and a corresponding 16×4 array of input channels that share a common bulk receiving optic. In this configuration, the system may exhibit a bulk resolution identical to that of one- and two-column systems including the same number of pixels arranged on a pixel block of approximately the same height at the same effective vertical pixel pitch, but the four-column system may exhibit greater dynamic range than the one- and two-column systems. In particular, pixels in each column of the four-column system can be offset vertically by a fourth vertical pitch half the second vertical pitch of the two-column system (e.g., 400 microns versus 200 microns), and each column of pixels in the four-column system can be offset vertically from an adjacent column of pixels by one-quarter of the fourth virtual pitch, thereby providing space in the four-column system for pixels twice the height of pixels in the two-column system given the same number of pixels arranged on a pixel block of approximately the same height. Therefore, for square pixels, each pixel in the four-column system can define an area approximately four times that of a pixel in the two-column system, can thus include approximately four times the number of detectors as a pixel in the two-column system, and can thus exhibit approximately four times the dynamic range of a pixel in the two-column system. In the example above, for a pixel block approximately 640 microns tall and including 64 pixels, the four-column system can include four columns of pixels, each column including sixteen 400-micron-square pixels, each pixel including 32 50-micron-wide detectors.

However, because the four-column system includes four columns of pixels, all horizontally offset from a center of the system, pixels in a leftmost column can exhibit fields of view angularly offset—in the horizontal plane—from fields of view of pixels in a rightmost column greater than (e.g., twice) the angular offset—in the horizontal plane—between fields of view of pixels in the first and second columns of the two-column system described above. The four-column system can thus exhibit greater horizontal distortion than the two-column system, such as shown in FIG. **3**A.

4.3 Pixel Pattern: 8×8:

In yet another configuration, the system includes eight columns of pixels, such as an 8×8 array of pixels and a corresponding 8×8 array of input channels that share a common bulk receiving optic. In this configuration, the system may exhibit a bulk resolution identical to that of one-, two-, and four-column systems including the same number of pixels arranged on a pixel block of approximately the same height at the same effective vertical pixel pitch, but the eight-column system may exhibit greater dynamic range than the one-, two-, and four-column systems. In particular, pixels in each column of the eight-column system can be offset vertically by an eight vertical pitch twice the fourth vertical pitch of the four-column system (e.g., 800 microns versus 400 microns), and each column of pixels in the eight-column system can be offset vertically from an adjacent column of pixels by one-eighth of the eight virtual pitch, thereby providing space in the eight-column system for pixels twice the height of pixels in the four-column system given the same number of pixels arranged on a pixel block of approximately the same height. Therefore, for square pixels, each pixel in the eight-column system can define an area approximately four times that of a pixel in the four-column system, can thus include approximately four times the number of detectors as a pixel in the four-column system, and can thus exhibit approximately four times the dynamic range of a pixel in the four-column system. In the example above, for a pixel block approximately 640 microns tall and including 64 pixels, the eight-column system can include eight columns of pixels, each column includes eight 800-micron-square pixels, each pixel including ~120 50-micron-wide detectors.

However, because the eight-column system includes eight columns of pixels, all horizontally offset from a center of the system, pixels in a leftmost column can exhibit fields of view angularly offset—in the horizontal plane—from fields of view of pixels in a rightmost column twice the angular offset—in the horizontal plane—between fields of view of pixels in the leftmost and rightmost columns of the four-column system. The eight-column system can thus exhibit greater horizontal distortion than the four-column system described above.

However, the system can include any other number of pixels arranged in any other number of columns or rows to achieve at least a threshold resolution, a minimum dynamic range, a maximum horizontal and/or vertical optical distortion of the fields of views of pixels on the periphery of the pixel block, or a maximum width and/or height of the pixel block, etc.

5. Bulk Receiving Optic and Input Channels

As shown in FIGS. **1**, **3**A, and **3**B, the system also includes: a bulk receiving optic; a first set of input channels

interposed between the bulk receiving optic and the pixel block, each input channel in the first set of input channels configured to communicate light incident from the bulk receiving optic to a corresponding pixel in the first column of pixels; and a second set of input channels horizontally offset from the set of input channels and interposed between the bulk receiving optic and the pixel block, each input channel in the second set of input channels configured to communicate light incident from the bulk receiving optic to a corresponding pixel in the second column of pixels. Generally, the bulk receiving optic functions to collect light (i.e., electromagnetic radiation) from outside the system; and each input channel functions to collect light from the bulk receiving optic, to filter this light, and to pass light over a relatively narrow wavelength band to a corresponding pixel in the pixel block.

In one implementation, each input channel is coaxial with its corresponding pixel such that the first and second sets of input channels are arranged in a skewed grid array substantially similar to the skewed grid array defined by the pixels, as described above. Each input channel can include: an aperture arranged on the focal plane; a filter configured to pass perpendicular incident light at an operating frequency (or within a narrow operating band); an input lens interposed between the aperture and the filter and configured to output collimated light to the filter; and an output lens adjacent the filter opposite the input lens and configured to spread light passed by the filter across a corresponding pixel in the pixel block (and/or to re-focus light passed by the filter into the active areas of a corresponding pixel). Generally, the bulk receiving optic, apertures, input lenses, optical filter, and the pixels cooperate to collect light (e.g., ambient light and light output by the illumination source), to collimate this light, to reject all light outside of a narrow band of wavelengths including a center output wavelength of an illumination source (described below), and to detect light that reached the pixel. The system can thus transform an incident photon count, a time between incident photons, an incident photon time relative to an illumination beam output time, etc. recorded by a particular pixel during one sampling period into a distance from the system to an external surface in a field of view of the particular pixel, as defined by a corresponding input channel and the bulk receiving optic.

In this implementation, the set of input channels can be defined in a single input block including: an aperture layer arranged behind the bulk receiving optic and defining one input aperture per input channel; a lens layer adjacent the aperture layer opposite the bulk receiving optic and defining an input lens substantially axially aligned with a corresponding input aperture for each input channel; and an optical filter adjacent the lens layer opposite the aperture layer and spanning the lens layer. In this implementation, the bulk receiving optic is characterized by a bulk focal distance, is offset from a focal plane by the bulk focal distance, and functions to project incident light rays from outside the system toward the focal plane. For example, the bulk receiving optic can include multiple lenses, such as one or more bi-convex lenses (shown in FIGS. **1** and **4**) and/or plano-convex lenses, that cooperate to form a converging lens characterized by a particular bulk focal length at or near the center wavelength of perpendicular light rays passed by the optical filter (i.e., a "nominal operating wavelength of the system"). (The bulk receiving lens can also define a nominal axis perpendicular to the focal plane, as referenced below.)

The aperture layer: includes a relatively thin opaque structure arranged behind the bulk receiving optic and coincident the focal plane; and defines one aperture per input channel and a stop region around the apertures. The stop region of the aperture layer rejects (e.g., blocks, absorbs, reflects) incident light rays, and each aperture passes incident light rays toward its corresponding input lens. For example, the aperture layer can define a set of apertures, wherein each aperture is of a diameter approaching a diffraction-limited diameter to maximize geometrical selectivity of the field of view of the system.

In this implementation, the input lens is characterized by a second focal length, is offset from the focal plane by the second focal length, collimates lights rays passed by the aperture, and passes collimated light rays to the optical filter. For example, the input block can include one input lens per channel, wherein each input lens includes a converging lens characterized by a ray cone substantially matched to a ray cone of the bulk receiving optic and can be offset from the focal plane of the bulk receiving optic by a relatively short second focal length to preserve the aperture of the bulk receiving optic and to collimate light passed by a corresponding aperture. The optical filter receives collimated light—in a spectrum of wavelengths—from the input lens, passes a relatively narrow band of wavelengths of light (e.g., the operating wavelength+/−0.25 nanometers) to the corresponding pixel, and blocks (e.g., reflects, absorbs) light outside of this narrow wavelength band. For example, the optical filter can include a narrow optical bandpass filter.

In one example in which the system includes an illumination source, as described below, the illumination source can output light (predominantly) at a nominal wavelength of 900 nm, and the optical filter can define a planar optical bandpass filter configured to pass light (incident on the optical filter at an angle of 90°) between 899.95 nm and 900.05 nm and configured to block substantially all light (incident on the optical filter at an angle of 90°) outside of this band. A pixel in the set of pixels can thus receive light (i.e., "photons") passed by the optical filter, detect these incident photons, and output a signal corresponding to a number or rate of detected photons during a sampling period.

In this implementation, the bulk receiving optic, the aperture layer, the lens layer, the optical filter, and the output lenses can be fabricated and then aligned with and mounted onto the pixel block. In one example, the optical filter is fabricated by coating a fused silica substrate. Photoactive optical polymer is then deposited over the optical filter, a lens mold defining an array of lens forms placed over the photoactive optical polymer, and a UV light source activated to cure the photoactive optical polymer into a pattern of lenses across the optical filter. Standoffs are similarly molded or formed across the optical filter via photolithography techniques. The aperture layer is separately fabricated by selectively metallizing a glass wafer and etching apertures into this metallic layer; the glass wafer is then bonded or otherwise mounted to these standoffs. In this example, the assembly is subsequently inverted, and a second set of standoffs is similarly fabricated across the optical filter opposite the lens layer. The pixel block (e.g., a discrete image sensor) is aligned with and bonded to the second set of standoffs; the bulk receiving optic is similarly mounted over the aperture layer to complete the system.

Alternatively, the pixel block can be fabricated on a semiconductor wafer (e.g., in the form of an application-specific integrated circuit), and the bulk receiving optic, the aperture layer, the lens layer, and the optical filter can be fabricated directly onto the semiconductor wafer—over the pixel block—via photolithography and wafer-level bonding

techniques. However, the bulk receiving optic, the aperture layer, the lens layer, the optical filter, and the pixel block can be fabricated and assembled in any other way and according to any other method or technique.

6. Output Circuit

The system can include an output circuit, including a bulk transmitting optic and an illumination source. In one implementation, the bulk transmitting optic: is substantially identical to the bulk receiving optic in material, geometry (e.g., focal length), optical properties, and/or thermal isolation, etc.; and is adjacent and offset laterally and/or vertically from the bulk receiving optic.

In one example, the illumination source includes a monolithic VCSEL array of optical emitters arranged behind the bulk transmitting optic. In this example, the illumination source can include a laser diode array defining a column of optical emitters characterized by an emitter pitch distance substantially identical to the aperture pitch distance. In this example, each optical emitter can output an illuminating beam of an initial diameter substantially identical to (or slightly greater than) the diameter of a corresponding aperture in the aperture layer, and the illumination source can be arranged along the focal plane of the bulk transmitting optic such that each illuminating beam projected from the bulk transmitting optic into the field ahead of the system is of substantially the same size and geometry as the field of view of a corresponding input channel—and therefore the field of view of a corresponding pixel—at any distance from the system. Therefore, the illumination source and the bulk transmitting optic can cooperate to project substantially illuminating beams into the fields of view of the input channels with relatively little or no light projected beyond these fields of view of the input channels.

In this example, the system can selectively project illuminating beams into a field ahead of the system according to an illumination pattern that substantially matches—in size and geometry across a range of distances from the system—the fields of view of the input channels (e.g., fields of view defined by the apertures). Therefore, the illumination source can illuminate substantially only surfaces in the field ahead of the system that are within the fields of view of corresponding pixels such that minimal power output by the system via the illumination source is wasted by illuminating surfaces in the field for which the pixels are blind. Furthermore, the center output wavelength of the illumination source can be matched to the center wavelength passed by the filter. The system can thus achieve a relatively high ratio of signal (e.g., photons originating from the illumination source and passed to the pixels on the sensor block) to noise (e.g., photons not originating from the illumination source, such as ambient light, and passed to the pixels on the sensor block).

7. Data Acquisition

During operation, the system can collect light data from the set of pixels and transform these light data into distance values during a single sampling period. In one implementation, during a sampling period, the system: activates the illumination source of the output circuit in order to project light into fields of view of each pixel and input channel; records a time that the illumination source was activated (an "illumination timestamp"); and reads each detector in each pixel, such as by storing in memory a number of detectors in each pixel that recorded an incident photon since a last sampling period and incident times of these photons and then clearing all detectors in each pixel. During a sampling period, the system can also calculate a distance to a surface in a field of view of a pixel based on a difference between the illumination timestamp and a time of peak frequency of incident photons since the last sampling period for each pixel in the set. For example, for each pixel, upon conclusion of a sampling period, the system can implement time of flight techniques to transform an illumination timestamp and a time of peak incident photon rate at a pixel between the current and a last sampling period into a distance from the system to an external surface within the field of view of the pixel. However, the system can implement any other method of technique to illuminate fields of view of each pixel and input channel during a sampling period and to process data collected from the set of pixels into distance values or related values.

The system can further include an actuator configured to rotate the pixel block, input block, and bulk receiving optic during operation. For example: the rotary actuator can include a rotary electric motor with an optical encoder; the pixel block, input block, and bulk receiving optic can be mounted in-unit on an output shaft of the rotary electric motor; and the system can implement closed-loop feedback controls to maintain the rotational speed of the rotary electric motor at 60 Hz (or 360 rpm) based on outputs of the optical encoder.

As described below, the system can execute one sampling period at each of a number of arcuate sampling positions per single rotation of the pixel block. For example, the system can execute 2048 arcuate sampling positions and output a single nominal matrix containing 2048 columns of distance values per each 360° rotation of the pixel block (i.e., scan cycle), wherein a single nominal matrix generated during a scan cycle thus represents distances from the system to external surfaces 360° around the sensor (at some viewing angle defined by the bulk receiving optic and a number of pixels in each column of pixels).

8. Nominal Matrix

Because the system includes multiple columns of pixels, data output by the set of pixels during a single sampling period corresponds to multiple columns of distance values, each column corresponding to a unique yaw angle relative to the pixel block. Similarly, because each pixel in the system is arranged at a unique vertical position (i.e., because the array of pixels project to a single column of non-overlapping pixels), data output by the set of pixels during a single sampling period corresponds to multiple rows of distance values, wherein each row includes a single distance value and corresponds to a unique pitch angle relative to the pixel block. In particular, the system can assemble data collected from the set of pixels during a single sampling period into multiple incomplete columns of distance values, wherein each incomplete column of distance values corresponds to one unique yaw angle.

However, the system can combine distance values generated from data collected from a second column of pixels during a first sampling period with distance values generated from data collected by a first column of pixels during a second sampling period in order to complete a second column of distance values, as shown in FIGS. **5A1-5A2**. The system can repeat this process at each arcuate sampling position during a single rotation of the system (i.e., a single scan cycle) in order to generate a matrix (or other data container) containing one complete column of distance

values for non-overlapping pitch angles for each arcuate sampling position implemented by the system, as shown in FIGS. **5D1-5D3**.

In one example, the system includes a 16×4 array of pixels with a vertical offset of Y between adjacent columns of pixels and a pixel pitch of **4**Y in each column of pixels, as shown in FIGS. **2** and **4**. In this example, the system implements 2048 sampling periods per rotation for an angular offset of 0.176° between adjacent arcuate sampling positions. At a first arcuate sampling position of 0°, the system executes a first sampling routine, as described above. The system then: populates the [(1,1), (5,1), (9,1), . . . (57,1), and (61,1)] positions within a distance matrix with distance values calculated from data received from the first, second, third, fourth, . . . fifteenth, and sixteenth pixels in the first column, respectively, during the first sampling period; populates the [(2,2), (6,2), (10,2), . . . (58,2), and (62,2)] positions within the distance matrix with distance values calculated from data received from the first, second, third, fourth, . . . fifteenth, and sixteenth pixels in the second column, respectively; populates the [(3,3), (7,3), (11,3), . . . (59,3), and (63,3)] positions within the distance matrix with distance values calculated from data received from the first, second, third, fourth, . . . fifteenth, and sixteenth pixels in the third column, respectively; and populates the [(4,4), (8,4), (12,4), . . . (60,4), and (64,4)] positions within the distance matrix with distance values calculated from data received from the first, second, third, fourth, . . . fifteenth, and sixteenth pixels in the fourth column, respectively, as shown in FIGS. **5A1-5A2**.

During the same scan cycle, the rotary actuator rotates the pixel block to a next arcuate sampling position of 0.176°, and the system then executes a second sampling routine. During the second sampling, the system: populates the [(1,2), (5,2), (9,2), . . . (57,2), and (61,2)] positions within the distance matrix with distance values calculated from data received from the first, second, third, fourth, . . . fifteenth, and sixteenth pixels in the first column, respectively, during the second sampling period; populates the [(2,3), (6,3), (10,3), . . . (58,3), and (62,3)] positions within the distance matrix with distance values calculated from data received from the first, second, third, fourth, . . . fifteenth, and sixteenth pixels in the second column, respectively; populates the [(3,4), (7,4), (11,4), . . . (59,4), and (63,4)] positions within the distance matrix with distance values calculated from data received from the first, second, third, fourth, . . . fifteenth, and sixteenth pixels in the third column, respectively; and populates the [(4,5), (8,5), (12,5), . . . (60,5), and (64,5)] positions within the distance matrix with distance values calculated from data received from the first, second, third, fourth, . . . fifteenth, and sixteenth pixels in the fourth column, respectively, as shown in FIGS. **5B1-5B3**. The system repeats this process for each subsequent arcuate sampling position of the scan cycle, such as shown in FIGS. **5C1-5C3** and **5D1-5D3**, in order to form a 2048×64 matrix containing 2048 columns, wherein each column corresponds to a unique yaw angle relative to the rotary actuator and contains 64 distance values, wherein each distance value in a column corresponds to a unique pitch angle relative to the pixel block, as shown in FIG. **3**B.

The system can thus construct one nominal matrix containing a column of distance values corresponding to each arcuate sampling position within a single 360° rotation of the pixel per scan cycle. In particular, the system can generate one nominal matrix—per scan cycle—representing distances of surfaces from the pixel block about a full 360° rotation axis of the system. For example, the rotary actuator can rotate the system at a rate of 360 rpm, and the system can generate one nominal matrix per 16.7 milliseconds (i.e., at a rate of 60 Hz).

Furthermore, to achieve vertical alignment of the pixel columns at each sampling position, two adjacent columns of pixels (and two corresponding columns of input channels) can be horizontally offset by a horizontal pitch distance corresponding to a focal length of the bulk receiving optic and an angular pitch between adjacent arcuate sampling positions. In one example, the pixel block includes a 16×4 array of pixels, the bulk receiving optic is characterized by a focal length of 10 millimeters, each input channel is coaxial with its corresponding pixel, and the system implements 2048 sampling periods per scan cycle (i.e., per rotation). In this example, the angular offset between adjacent arcuate sampling positions is 0.176°, and the horizontal offset between adjacent pixel columns—and adjacent columns of corresponding apertures—is 400 microns such that the second column of pixels at a second arcuate sampling position of 0.176° is vertically aligned with a first column of pixels in a first arcuate sampling position of 0°. During a single scan cycle, the system can thus sample all pixels at each of the 2048 arcuate sampling positions to collect 2048 columns of light data in a single 360° rotation.

9. Distortion Correction

Because the system contains multiple laterally-offset columns of pixels sharing a common bulk receiving optic, the fields of view of pixels in two adjacent columns of pixels may not share the same yaw angle relative to the pixel block, as shown in FIG. **3**A. Thus, a column in a nominal matrix constructed from data collected over a sequence of sampling periods during a scan cycle can contain a set of distance values representing multiple different true yaw angles relative to the pixel block. For example, for the system described above that includes a 16×4 skewed grid array of pixels: pixels in the first column can exhibit fields of view offset −0.03° in yaw from the nominal axis of the bulk receiving optic; pixels in the second column can exhibit fields of view offset−0.01° in yaw from the nominal axis of the bulk receiving optic; pixels in the third column can exhibit fields of view offset+0.01° in yaw from the nominal axis of the bulk receiving optic; and pixels in the fourth column can exhibit fields of view offset+0.03° in yaw from the nominal axis of the bulk receiving optic given a particular operating temperature. In this example: a (1,1) distance value in the nominal matrix can thus represent a distance to a surface in a field of view angularly offset from the nominal axis of the bulk receiving optic by −0.03° in yaw; a (2,1) distance value in the nominal matrix can thus represent a distance to a surface in a field of view angularly offset from the nominal axis of the bulk receiving optic by −0.01° in yaw; . . . a (63,1) distance value in the nominal matrix can thus represent a distance to a surface in a field of view angularly offset from the nominal axis of the bulk receiving optic by +0.01° in yaw; and a (64,1) distance value in the nominal matrix can thus represent a distance to a surface in a field of view angularly offset from the nominal axis of the bulk receiving optic by +0.03° in yaw at the particular operating temperature.

Similarly, because pixels in a single column within the system are vertically offset but share a common bulk receiving optic, the fields of view of two adjacent pixels in one column of pixels may not share the same pitch angle relative to the pixel block, as shown in FIG. **3**B. Thus, a column in a nominal matrix constructed from data collected during a

scan cycle can contain a set of distance values representing multiple different true yaw pitch angles relative to the pixel block. For example, for the system described above that includes a 16×4 skewed grid array of pixels: a first pixel in the first column can exhibit a field of view offset+0.25° in pitch from the nominal axis of the bulk receiving optic; a second pixel in the first column can exhibit a field of view offset+0.22° in pitch from the nominal axis of the bulk receiving optic; . . . a sixteenth pixel in the first column can exhibit a field of view offset −0.25° in pitch from the nominal axis of the bulk receiving optic; a first pixel in the second column can exhibit a field of view offset +0.243° in pitch from the nominal axis of the bulk receiving optic; a second pixel in the second column can exhibit a field of view offset+0.235° in pitch from the nominal axis of the bulk receiving optic; . . . a sixteenth pixel in the second column can exhibit a field of view offset −0.258° in pitch from the nominal axis of the bulk receiving optic; etc. In this example: a (1,1) distance value in the nominal matrix can thus represent a distance to a surface in a field of view angularly offset from the nominal axis of the bulk receiving optic by +0.25° in pitch; a (2,1) distance value in the nominal matrix can represent a distance to a surface in a field of view angularly offset from the nominal axis of the bulk receiving optic by +0.243° in pitch; a (3,1) distance value in the nominal matrix can represent a distance to a surface in a field of view angularly offset from the nominal axis of the bulk receiving optic by +0.235° in pitch; a (4,1) distance value in the nominal matrix can represent a distance to a surface in a field of view angularly offset from the nominal axis of the bulk receiving optic by +0.228° in pitch; a (5,1) distance value in the nominal matrix can represent a distance to a surface in a field of view angularly offset from the nominal axis of the bulk receiving optic by +0.22° in pitch; etc.

The system can thus generate a nominal matrix containing distance values—corresponding to data collected by the set of pixels during a scan cycle—representing distances to surfaces in fields of view offset from the nominal axis of the bulk receiving optic in both pitch and yaw axes. In particular, the system can generate a nominal matrix containing a column of distance values representing a single "ideal" yaw angle of 0° relative to the sensor block (e.g., similar to fields of view of a single column of pixels), but the real horizontal offset between columns of pixels in the system can yield a difference between this ideal yaw angle and the actual yaw angle of fields of view of pixels represented in this column of distance values in the nominal matrix; this difference can manifest as distortion of distance data along the horizontal axis. Similarly, pixels in a single column of pixels can exhibit fields of view that increase in pitch angle offset from the nominal axis of the bulk receiving optic with increasing distance from the center of the grid array of pixels, which can manifest as a lowest resolution at the first and last rows and as a greatest resolution at the center row(s) in the nominal matrix.

The system can thus pair a nominal matrix with a correction matrix defining pitch and yaw offset angles for each entry in the nominal matrix. In particular, by merging distance values contained in a nominal matrix output in a scan cycle with corresponding angular values contained in a correction matrix, the system (or other device) can calculate positions of surfaces detected during the scan cycle to an improved degree of accuracy. For example, for pixels in the first column of pixels that exhibit fields of view offset −0.03° in yaw from the nominal axis of the bulk receiving optic, the correction matrix can define a five-centimeter leftward correction of a (1,1) distance value of 100 meters in the nominal matrix (e.g., 100 meters x)sin(−0.03°=5.2 centimeters).

Furthermore, pitch and yaw offset angles of a field of a view of each pixel in the system can vary with (i.e., be a function of) the focal length of the bulk receiving optic, and the focal length of the bulk receiving optic can vary with temperature of the system. Therefore, the system can pair the nominal matrix with a correction matrix based on a temperature of the system, such as for a bulk receiving optic including one or more polymer lenses. In one implementation, the system stores a set of preset correction matrices, wherein each correction matrix corresponds to a particular temperature and contains pitch and yaw offset angles for the field of view of each pixel in the system at the particular temperature. In this implementation, the system: can also include a temperature sensor thermally coupled to the bulk receiving optic; can sample the temperature sensor during operation (e.g., once per scan cycle); and can pair a nominal matrix generated from data collected during a scan cycle with a correction matrix—selected from the set of correction matrices—corresponding to a temperature nearest a temperature of the bulk receiving optic recorded during the same scan cycle. For example, for the system that operates within a temperature range from 119° F. to 121° F., the system can contain 21 preset correction matrices, each correction matrix corresponding to one of 21 0.1° F. temperature steps between 119° F. and 121° F., inclusive. For example, each correction matrix can be generated empirically by characterizing the fields of view of pixels within the system at select operating temperatures.

Alternatively, the system can implement a parametric model or other parametric function to generate a correction matrix based on the temperature of the bulk receiving optic (or other element within the system). However, the system can implement any other method or technique to pair a nominal matrix generated from data collected during a scan cycle with a correction matrix representing horizontal and vertical distortion of data contained within the nominal matrix.

10. Increased Resolution

In one variation, the system increases a number of angular sampling executed positions per rotation in order to increase the resolution of a nominal matrix generated during a scan cycle. In one implementation, the system includes a skewed grid array of pixels, wherein adjacent columns of pixels (and corresponding columns of input channels) are offset laterally by a distance corresponding to X-number of radial steps in a single rotation (e.g., 2048 steps at 0.176° between steps) but executes 2× equidistant arcuate sampling positions per complete rotation (e.g., 4096 arcuate sampling positions at 0.088° between steps per scan cycle).

In the example described above in which the system includes a 16×4 array of pixels, the system executes a first sampling routine at a first arcuate sampling position of 0° and then: populates the [(1,1), (5,1), (9,1), . . . (57,1), and (61,1)] positions within a first column in a distance matrix with distance values calculated from data received from the first, second, third, fourth, . . . fifteenth, and sixteenth pixels in the first column of pixels, respectively, during the first sampling period; populates the [(2,3), (6,3), (10,3), . . . (58,3), and (62,3)] positions within the third column of the distance matrix with distance values calculated from data received from the first, second, third, fourth, . . . fifteenth, and sixteenth pixels in the second column of pixels, respectively; populates the [(3,5), (7,5), (11,5), . . . (59,5), and

(63,5)] positions within the fifth column of the distance matrix with distance values calculated from data received from the first, second, third, fourth, . . . fifteenth, and sixteenth pixels in the third column of pixels, respectively; and populates the [(4,7), (8,7), (12,7), . . . (60,7), and (64,7)] positions within the seventh column of the distance matrix with distance values calculated from data received from the first, second, third, fourth, . . . fifteenth, and sixteenth pixels in the fourth column of pixels, respectively.

In this example, the rotary actuator rotates the pixel block, and the system executes a second sampling routine once the pixel block reaches a next arcuate sampling position of 0.088°. The system then: populates the [(1,2), (5,2), (9,2), . . . (57,2), and (61,2)] positions within a second column in the distance matrix with distance values calculated from data received from the first, second, third, fourth, . . . fifteenth, and sixteenth pixels in the first column of pixels, respectively, during the first sampling period; populates the [(2,4), (6,4), (10,4), . . . (58,4), and (62,4)] positions within the fourth column of the distance matrix with distance values calculated from data received from the first, second, third, fourth, . . . fifteenth, and sixteenth pixels in the second column of pixels, respectively; populates the [(3,6), (7,6), (11,6), . . . (59,6), and (63,6)] positions within the sixth column of the distance matrix with distance values calculated from data received from the first, second, third, fourth, . . . fifteenth, and sixteenth pixels in the third column of pixels, respectively; and populates the [(4,8), (8,8), (12, 8), . . . (60,8), and (64,8)] positions within the eight column of the distance matrix with distance values calculated from data received from the first, second, third, fourth, . . . fifteenth, and sixteenth pixels in the fourth column, respectively.

The system repeats this process once upon reaching a third arcuate sampling position at 0.176°, then at a fourth arcuate sampling position of 0.264°, and for each subsequent arcuate sampling position in a full rotation of the pixel block in order to form a 4096×64 matrix containing 4096 columns, wherein each column corresponds to a unique yaw angle relative to the rotary actuator and contains 64 distance values, wherein each distance value in a column corresponds to a unique pitch angle relative to the pixel block.

However, the system can execute a sampling period at any other number of arcuate sampling positions during a complete rotation of the pixel block (e.g., during a compete scan cycle), and the system can implement any other method or technique to transform data collected from the set of pixels during a scan cycle into a nominal matrix of distances from the system to external surfaces nearby.

The systems and methods described herein can be embodied and/or implemented at least in part as a machine configured to receive a computer-readable medium storing computer-readable instructions. The instructions can be executed by computer-executable components integrated with the application, applet, host, server, network, website, communication service, communication interface, hardware/firmware/software elements of a user computer or mobile device, wristband, smartphone, or any suitable combination thereof. Other systems and methods of the embodiment can be embodied and/or implemented at least in part as a machine configured to receive a computer-readable medium storing computer-readable instructions. The instructions can be executed by computer-executable components integrated by computer-executable components integrated with apparatuses and networks of the type described above. The computer-readable medium can be stored on any suitable computer readable media such as RAMs, ROMs, flash memory, EEPROMs, optical devices (CD or DVD), hard drives, floppy drives, or any suitable device. The computer-executable component can be a processor but any suitable dedicated hardware device can (alternatively or additionally) execute the instructions.

As a person skilled in the art will recognize from the previous detailed description and from the figures and claims, modifications and changes can be made to the embodiments of the invention without departing from the scope of this invention as defined in the following claims.

What is claimed is:

1. An optical system for collecting distance information, the optical system comprising:

an optical imaging transmit module comprising a bulk transmitting optic and an illumination source comprising a plurality of optical emitters arranged behind the bulk transmitting optic, wherein each optical emitter in the plurality of optical emitters can project light at a nominal wavelength through the bulk transmitting optic and into a field ahead of the optical system;

an optical imaging receive module comprising a bulk receiving optic and a plurality of pixels arranged behind the bulk receiving optic, wherein each pixel in the plurality of pixels comprises a plurality of single photon avalanche diodes (SPADs) and wherein the plurality of pixels includes a first set of pixels arranged in a first column and a second set of pixels arranged in a second column horizontally and vertically offset from the first column; and

an actuator operable to rotate the optical imaging receive module about a vertical axis over a plurality of scan cycles in which, during each scan cycle, the optical imaging receive module is rotated 360 degrees such that each pixel in the plurality of pixels traverses a unique circular path parallel to and vertically offset from a unique circular path traversed by every other pixel in the optical system;

wherein the optical system generates, for each of a plurality of arcuate sampling positions within one scan cycle, data that represents distances from the optical system to external surfaces in the field 360 degrees around the optical system.

2. The optical system of claim **1** further comprising an optical filter disposed in front of each pixel in the plurality of pixels and operable to allow a set of wavelengths of light, including the nominal wavelength, to pass through the optical filter while blocking light outside the set of wavelengths of light from reaching the plurality of pixels.

3. The optical system of claim **2** wherein the optical filter comprises a fused silica substrate having a coating formed thereon.

4. The optical system of claim **1** wherein the actuator includes an electric motor with an optical encoder and the optical system implements closed-loop feedback controls to maintain a rotational speed of the electric motor at a specific frequency based on outputs of the optical encoder.

5. The optical system of claim **1** wherein the bulk transmitting optic and the bulk receiving optic are each image-space telecentric lenses and the bulk transmitting optic is adjacent to an offset laterally from the bulk receiving optic.

6. The optical system of claim **1** wherein the optical imaging receive module comprises a plurality of microlenses disposed between the bulk receiving optic and the plurality of pixels.

7. The optical system of claim **1** wherein the circular paths traversed by pixels from the second set of pixels in the

second column are interleaved with the circular paths traversed by pixels from the first set of pixels in the first column.

8. The optical system of claim **1** wherein the optical imaging receive module further comprises a plurality of apertures and a stop region disposed between adjacent apertures in the plurality of apertures, wherein the plurality of apertures includes a first aperture and a second aperture horizontally and vertically offset from the first aperture, the first set of pixels includes a first pixel disposed in a first optical path that extends through the first aperture and the second set of pixels includes a second pixel disposed in a second optical path that extends through the second aperture.

9. The optical system of claim **1** wherein the optical system implements time of flight techniques to determine distances from the optical system to external surfaces in the field.

10. An optical system for collecting distance information, the optical system comprising:

an output circuit comprising a bulk transmitting optic and an illumination source configured to output light at a nominal wavelength, the illumination source including a plurality of optical emitters arranged behind the bulk transmitting optic, wherein each optical emitter can project an illuminating beam at the nominal wavelength through the bulk transmitting optic and into a field ahead of the optical system;

an input circuit comprising a bulk receiving optic disposed adjacent to the bulk transmitting optic and a plurality of pixels arranged behind the bulk receiving optic, wherein each pixel in the plurality of pixels comprises a plurality of single photon avalanche diodes (SPADs) and wherein the plurality of pixels includes a first set of pixels arranged in a first column and a second set of pixels arranged in a second column horizontally and vertically offset from the first column; and

an electric motor configured to rotate the input circuit about a vertical axis over a plurality of scan cycles in which, during each scan cycle, the input circuit is rotated 360 degrees such that each pixel in the plurality of pixels traverses a unique circular path parallel to and vertically offset from a unique circular path traversed by each other pixel in the optical system;

wherein the optical system collects data from each pixel in the plurality of pixels at a plurality of different arcuate sampling position as the input circuit is rotated through 360 degrees during each scan cycle.

11. The optical system of claim **10** wherein each pixel in the plurality of pixels has a field of view that is non-overlapping with fields of view of all other pixels in the plurality of pixels, and the illumination source is configured to project illuminating beams into the field ahead of the optical system according to an illumination pattern where each beam in the illumination pattern is coincident with a field of view of one pixel in the plurality of pixels.

12. The optical system of claim **11** wherein each scan cycle includes a plurality of sampling periods and, during each sampling period in the plurality of sampling periods, the optical system activates each emitter in the plurality of optical emitters to project the illumination pattern and determines a number of SPADs in each pixel that recorded an incident photon since a previous sampling period.

13. The optical system of claim **12** wherein, during each sampling period of the plurality of sampling periods within one scan cycle, the optical system determines distances to objects in the field based on a difference between a time at which an optical emitter is fired and a time at which incident photons are detected at a pixel having a field of view that overlaps with a field of view of the fired optical emitter.

14. The optical system of claim **10** wherein

the input circuit further comprises a plurality of apertures and stop region disposed between adjacent apertures in the plurality of apertures, wherein the plurality of apertures comprises a first aperture, a second aperture horizontally and vertically offset from the first aperture, a third aperture aligned vertically with the first aperture and vertically offset from the first and second apertures; and a fourth aperture aligned vertically with the second aperture and vertically offset from the first, second and third apertures;

the first set of pixels includes a first pixel and a third pixel and the second set of pixels includes a second pixel and a fourth pixel;

the plurality of optical emitters includes a first emitter, a second emitter, a third emitter and a fourth emitter; and

the first pixel has a field of view coincident with the first emitter such that the first pixel is operable to detect photons emitted from the first emitter and received through the bulk imaging optic after being reflected from surfaces within the field and passed through the first aperture; the second pixel has a field of view coincident with the second emitter such that the second pixel is operable to detect photons emitted from the second emitter and received through the bulk imaging optic after being reflected from surfaces within the field and passed through the second aperture; the third pixel has a field of view coincident with the third emitter such that the third pixel is operable to detect photons emitted from the third emitter and received through the bulk imaging optic after being reflected from surfaces within the field and passed through the third aperture; and the fourth pixel has a field of view coincident with the fourth emitter such that the fourth pixel is operable to detect photons emitted from the fourth emitter and received through the bulk imaging optic after being reflected from surfaces within the field and passed through the fourth aperture.

15. The optical system of claim **10** further comprising and an optical filter disposed between the bulk receiving optic and the plurality of pixels and configured to allow a narrow band of wavelengths of light, including the nominal wavelength, to pass through the optical filter while blocking light outside the narrow band.

16. An optical system for collecting distance information, the optical system comprising:

a light receiving unit comprising a bulk receiving optic and a plurality of pixels arranged behind the bulk receiving optic, wherein each pixel in the plurality of pixels comprises a plurality of single photon avalanche diodes (SPADs) and has a field of view that is non-overlapping with the fields of view of all other pixels in the plurality of pixels, and wherein the plurality of pixels includes a first set of pixels arranged in a first pixel column and a second set of pixels arranged in a second pixel column horizontally and vertically offset from the first pixel column;

a light transmitting unit comprising a bulk transmitting optic spaced apart from the bulk receiving optic and an illumination source configured to output light at a nominal wavelength, the illumination source including a plurality of optical emitters arranged behind the bulk transmitting optic, wherein each optical emitter proj-

ects an illuminating beam at the nominal wavelength through the bulk transmitting optic and into a field ahead of the optical system such that the plurality of optical emitters project a plurality of illuminating beams according to an illumination pattern that substantially matches, in size and geometry across a range of distances from the optical system, the fields of view of the plurality of pixels; and

an electric motor operable to rotate the light receiving unit about a vertical axis over a plurality of scan cycles in which, during each scan cycle, the light receiving unit is rotated 360 degrees such that each pixel in the plurality of pixels traverses a unique circular path parallel to and vertically offset from a unique circular path traversed by the other pixels in the plurality of pixels.

17. The optical system of claim **16** wherein the optical system generates, for each of a plurality of arcuate sampling positions within one scan cycle, data that represents distances from the optical system to external surfaces in the field 360 degrees around the optical system and implements time of flight techniques to transform the generated data into distances from the optical system.

18. The optical system of claim **16** further comprising and an optical filter disposed between the bulk receiving optic and each pixel in the plurality of pixels, wherein the optical filter is configured to allow a set of wavelengths of light, including the nominal wavelength, to pass through the optical filter while blocking light outside the set of wavelengths of light from reaching the plurality of pixels.

19. The optical system of claim **16** wherein:

the first set of pixels includes a first pixel and the second set of pixels includes a second pixel;

the light receiving unit further comprises a plurality of apertures including a first aperture and a second aperture horizontally and vertically offset from the first aperture;

the first aperture is disposed in a first optical path that extends from the bulk imaging optic, through the first aperture and to the first pixel; and

the first aperture is disposed in a second optical path that extends from the bulk imaging optic, through the second aperture and to the second pixel.

20. The optical system of claim **19** wherein:

the plurality of optical emitters includes a first emitter and a second emitter; and

the first pixel has a field of view that is coincident with the first emitter such that the first pixel is operable to detect photons emitted from the first emitter and received through the bulk receiving optic after being reflected from surfaces within the field and passed through the first aperture; and

the second pixel has a field of view that is coincident with the second emitter such that the second pixel is operable to detect photons emitted from the second emitter and received through the bulk receiving optic after being reflected from surfaces within the field and passed through the second aperture.

21. The optical system of claim **16** wherein:

the light receiving unit further comprises a plurality of apertures including a first aperture, a second aperture horizontally and vertically offset from the first aperture, a third aperture aligned vertically with the first aperture and vertically offset from the first and second apertures; and a fourth aperture aligned vertically with the second aperture and vertically offset from the first, second and third apertures;

the first set of pixels includes a first pixel and a third pixel and the second set of pixels includes a second pixel and a fourth pixel;

the plurality of optical emitters includes a first emitter, a second emitter, a third emitter and a fourth emitter; and

the first pixel has a field of view coincident with the first emitter such that the first pixel is operable to detect photons emitted from the first emitter and received through the bulk imaging optic after being reflected from surfaces within the field and passed through the first aperture; the second pixel has a field of view coincident with the second emitter such that the second pixel is operable to detect photons emitted from the second emitter and received through the bulk imaging optic after being reflected from surfaces within the field and passed through the second aperture; the third pixel has a field of view coincident with the third emitter such that the third pixel is operable to detect photons emitted from the third emitter and received through the bulk imaging optic after being reflected from surfaces within the field and passed through the third aperture; and the fourth pixel has a field of view coincident with the fourth emitter such that the fourth pixel is operable to detect photons emitted from the fourth emitter and received through the bulk imaging optic after being reflected from surfaces within the field and passed through the fourth aperture.

22. The optical system of claim **16** wherein the circular paths traversed by pixels from the second set of pixels in the second pixel column are interleaved with the circular paths traversed by pixels from the first set of pixels in the first pixel column.

23. An optical system for collecting distance information, the optical system comprising:

an optical imaging transmit module comprising a bulk transmitting optic and an illumination source comprising a plurality of optical emitters arranged behind the bulk transmitting optic, wherein the plurality of optical emitters project a plurality of beams of light at an operating wavelength through the bulk transmitting optic and into a field ahead of the optical system;

an optical imaging receive module comprising a bulk receiving optic and a plurality of pixels arranged behind the bulk receiving optic, wherein each pixel in the plurality of pixels comprises a plurality of single photon avalanche diodes (SPADs) and wherein the plurality of pixels includes a first set of pixels arranged in a first column and a second set of pixels arranged in a second column horizontally and vertically offset from the first column; and

an actuator operable to rotate the optical imaging receive module about a vertical axis over a plurality of scan cycles in which, during each scan cycle, the optical imaging receive module is rotated 360 degrees such that each pixel in the plurality of pixels traverses a unique circular path parallel to and vertically offset from a unique circular path traversed by every other pixel in the optical system;

wherein the optical system generates, for each of a plurality of arcuate sampling positions within one scan cycle, data that represents distances from the optical system to external surfaces in the field 360 degrees around the optical system.

24. The optical system of claim **23** wherein the optical system further comprises an optical bandpass filter disposed between the bulk transmitting optic and the plurality of

pixels and having a center wavelength matched to the operating wavelength of the plurality of optical emitters.

25. The optical system of claim **23** wherein the optical imaging receive module further comprises a plurality of apertures and a stop region disposed between adjacent apertures in the plurality of apertures, wherein the plurality of apertures includes a first aperture and a second aperture horizontally and vertically offset from the first aperture, the first set of pixels includes a first pixel disposed in a first optical path that extends through the first aperture and the second set of pixels includes a second pixel disposed in a second optical path that extends through the second aperture.

26. The optical system of claim **23** wherein the illumination source comprises a plurality of vertical cavity surface emitting lasers (VCSELs).

27. The optical system of claim **26** wherein the optical system implements time of flight techniques to determine distances from the optical system to external surfaces in the field.

* * * * *