US009651658B2

(12) **United States Patent**
Pennecot et al.

(10) **Patent No.: US 9,651,658 B2**
(45) **Date of Patent: May 16, 2017**

(54) **METHODS AND SYSTEMS FOR LIDAR OPTICS ALIGNMENT**

(71) Applicant: **Google Inc.**, Mountain View, CA (US)

(72) Inventors: **Gaetan Pennecot**, San Francisco, CA (US); **Pierre-yves Droz**, Los Altos, CA (US)

(73) Assignee: **Google Inc.**, Mountain View, CA (US)

(*) Notice: Subject to any disclaimer, the term of this patent is extended or adjusted under 35 U.S.C. 154(b) by 140 days.

(21) Appl. No.: **14/671,085**

(22) Filed: **Mar. 27, 2015**

(65) **Prior Publication Data**

US 2016/0282453 A1 Sep. 29, 2016

(51) **Int. Cl.**

G01S 7/497	(2006.01)
G01S 7/51	(2006.01)
G01S 17/06	(2006.01)
G01S 17/42	(2006.01)
G01S 7/481	(2006.01)
G02B 27/62	(2006.01)

(52) **U.S. Cl.**

CPC ***G01S 7/4972*** (2013.01); ***G01S 7/4815*** (2013.01); ***G01S 7/4817*** (2013.01); ***G01S 7/51*** (2013.01); ***G01S 17/06*** (2013.01); ***G01S 17/42*** (2013.01); ***G02B 27/62*** (2013.01)

(58) **Field of Classification Search**

CPC G01C 1/04; G01C 3/08; G01C 15/00

See application file for complete search history.

(56) **References Cited**

U.S. PATENT DOCUMENTS

4,889,425	A	12/1989	Edwards et al.	
5,872,626	A	2/1999	Lipscomb	
6,788,855	B2	9/2004	Massey et al.	
7,064,817	B1	6/2006	Schmitt et al.	
8,400,619	B1 *	3/2013	Bachrach	G01C 1/04 356/4.01
2012/0081544	A1	4/2012	Wee	
2013/0135604	A1 *	5/2013	Gogolla	G01S 7/4812 356/4.01

FOREIGN PATENT DOCUMENTS

CN	101551451	A	10/2009
EP	2527866	A1	11/2012

OTHER PUBLICATIONS

International Search Report and Written Opinion of corresponding International Application No. PCT/US2016/023125 (mailed Jun. 15, 2016).

* cited by examiner

Primary Examiner — Luke Ratcliffe

(74) *Attorney, Agent, or Firm* — McDonnell Boehnen Hulbert & Berghoff LLP

(57) **ABSTRACT**

A method is provided that involves mounting a transmit block and a receive block in a LIDAR device to provide a relative position between the transmit block and the receive block. The method also involves locating a camera at a given position at which the camera can image light beams emitted by the transmit block and can image the receive block. The method also involves obtaining, using the camera, a first image indicative of light source positions of one or more light sources in the transmit block and a second image indicative of detector positions of one or more detectors in the receive block. The method also involves determining at least one offset based on the first image and the second image. The method also involves adjusting the relative position between the transmit block and the receive block based at least in part on the at least one offset.

20 Claims, 23 Drawing Sheets

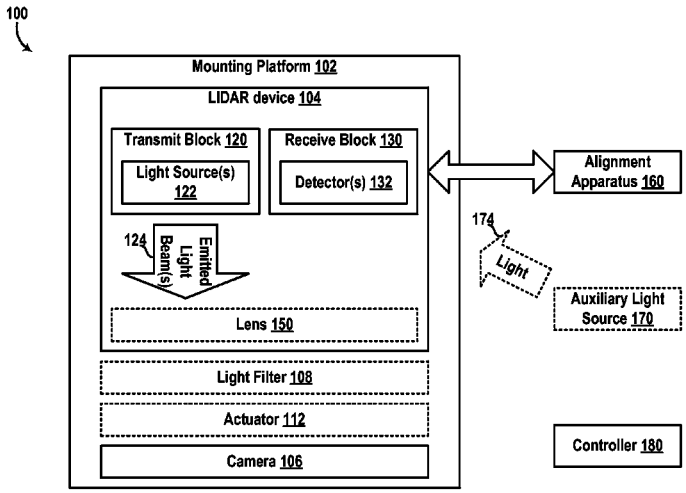

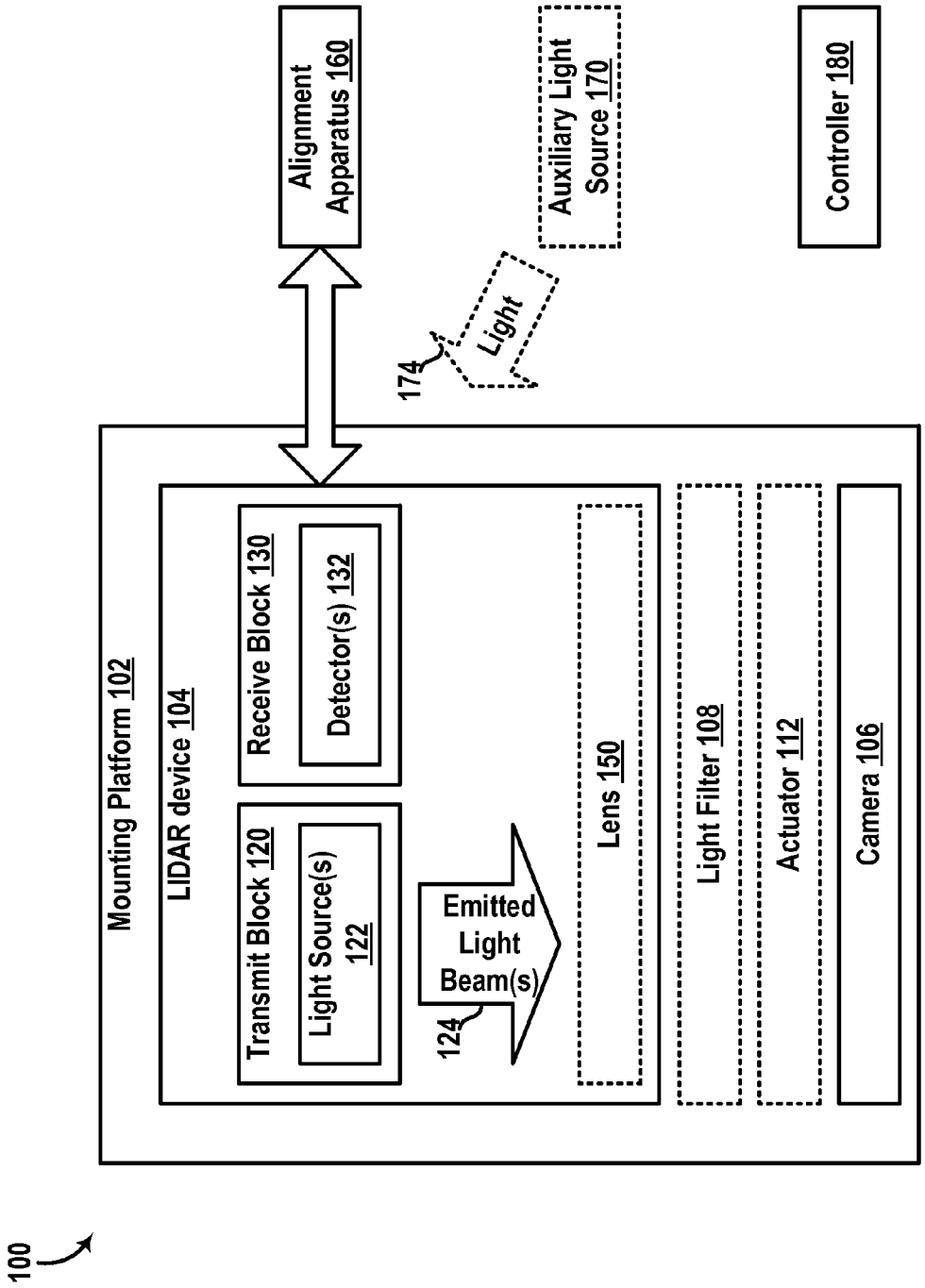
Alignment Apparatus 160
Auxiliary Light Source 170
Controller 180
174
Light
Mounting Platform 102
LIDAR device 104
Receive Block 130
Detector(s) 132
Transmit Block 120
Light Source(s) 122
Emitted Light Beam(s)
124
Lens 150
Light Filter 108
Actuator 112
Camera 106
100

FIG. 1

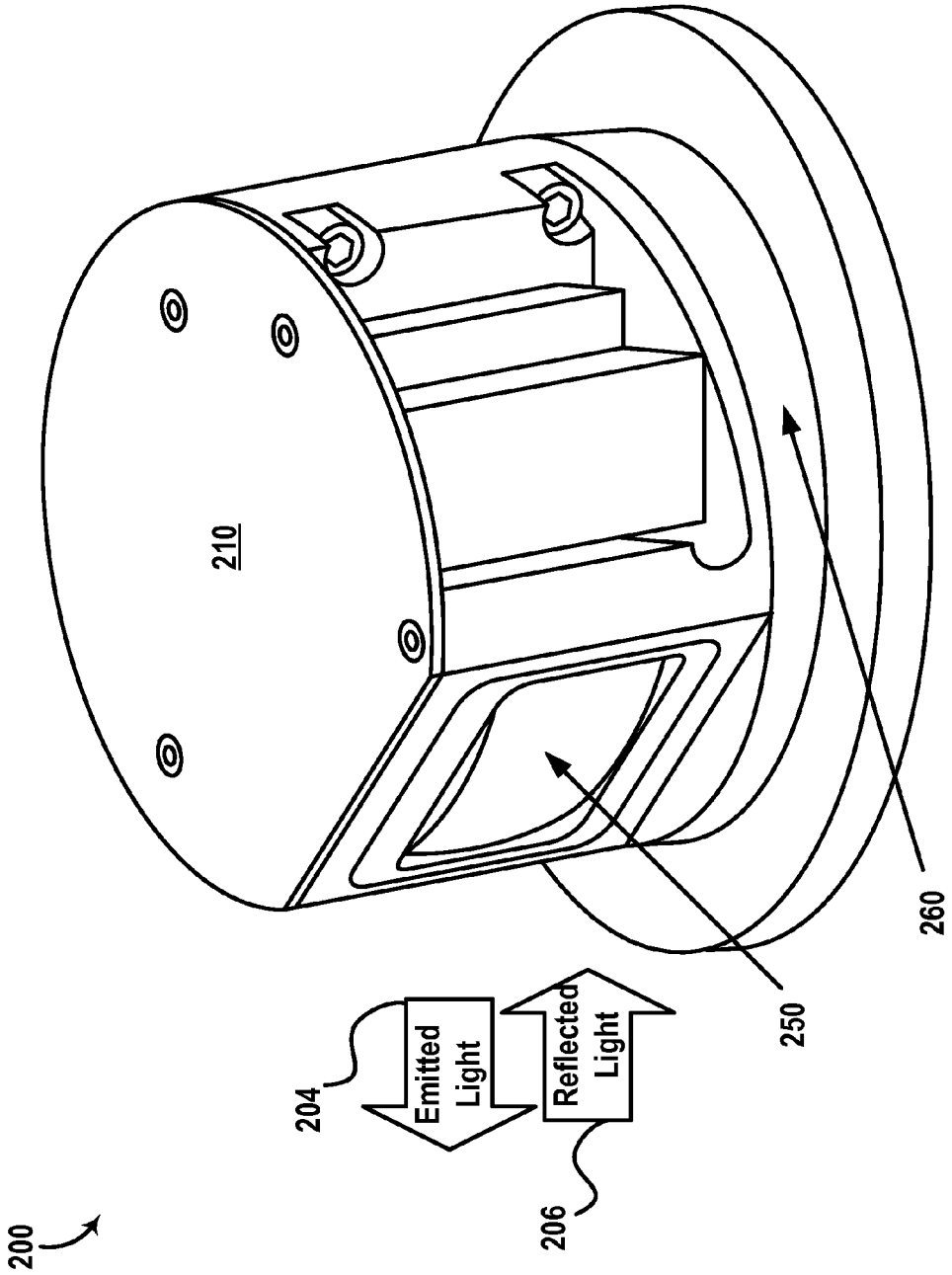

FIG. 2A

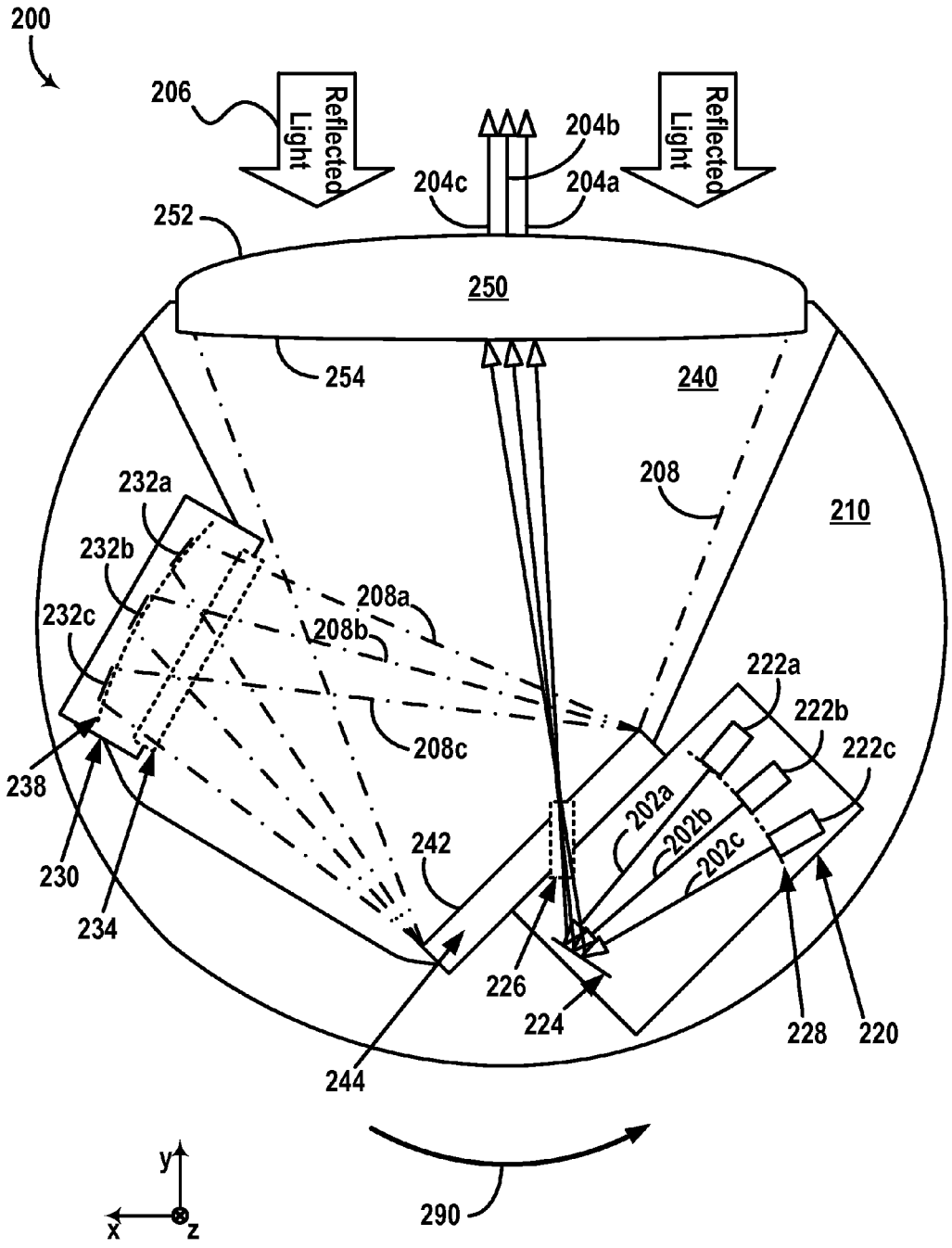
200
206
Reflected Light
Reflected Light
204b
204c
204a
252
250
254
240
208
210
232a
232b
232c
208a
208b
208c
222a
222b
222c
238
230
234
242
202a
202b
202c
226
224
228
220
244
290
y
x
z

FIG. 2B

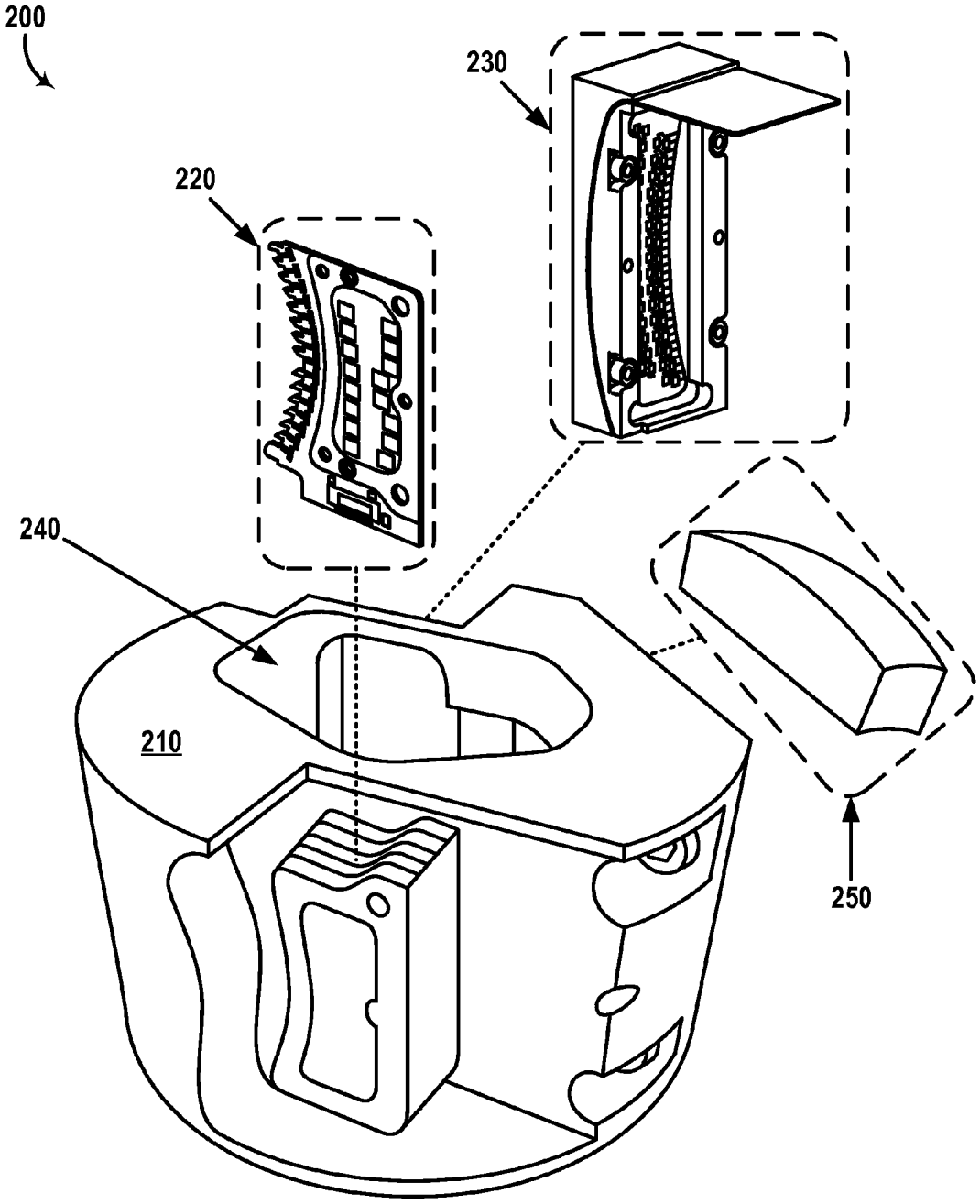

FIG. 2C

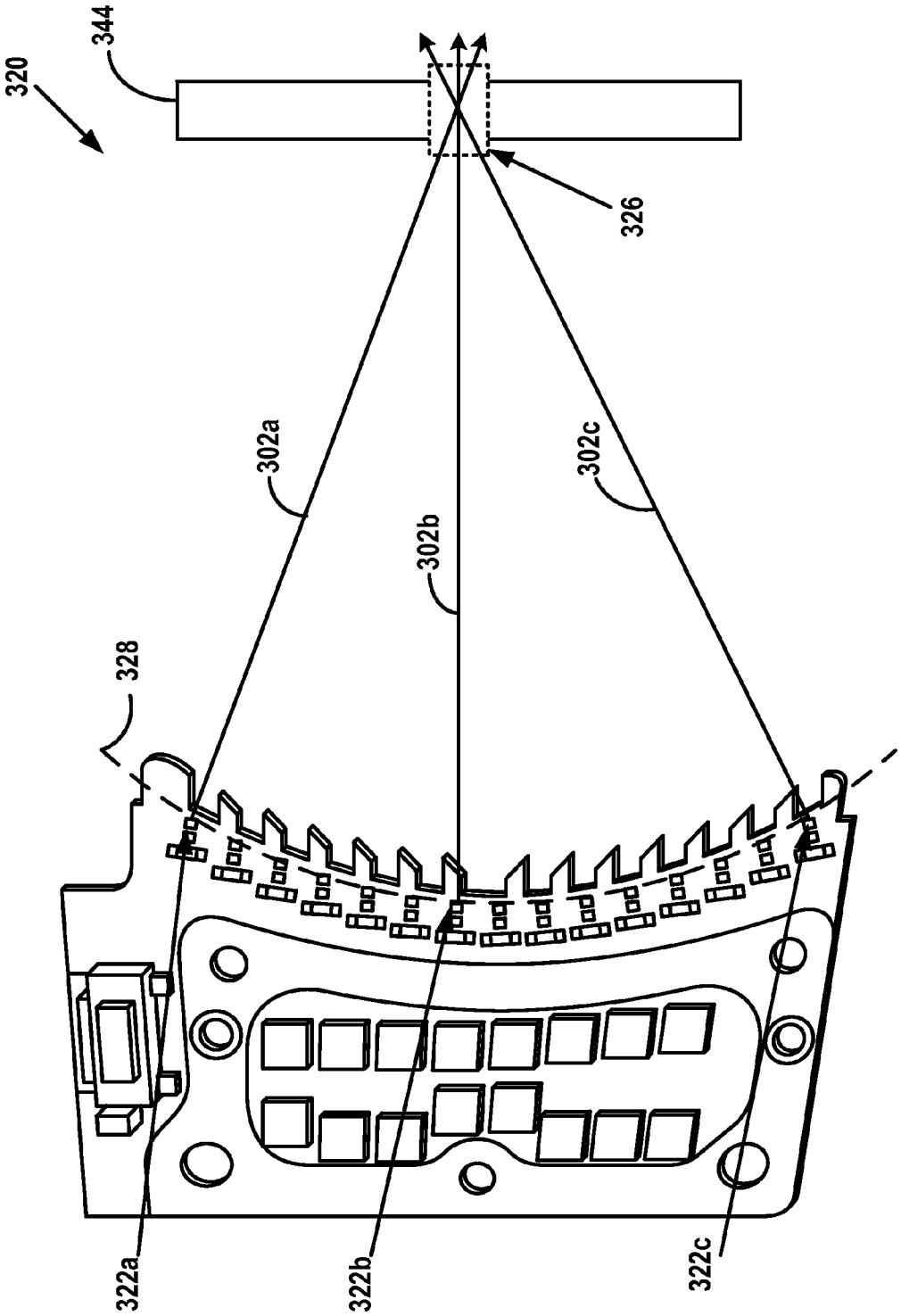

FIG. 3

FIG. 4A

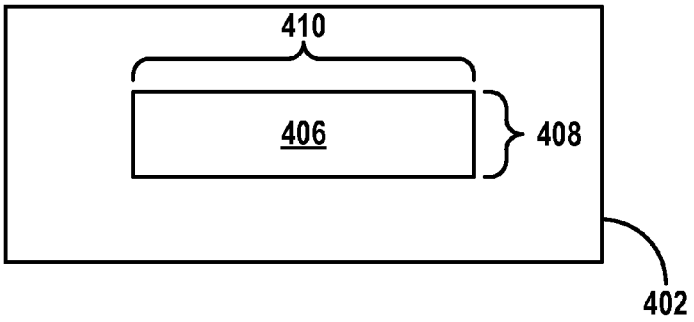

FIG. 4B

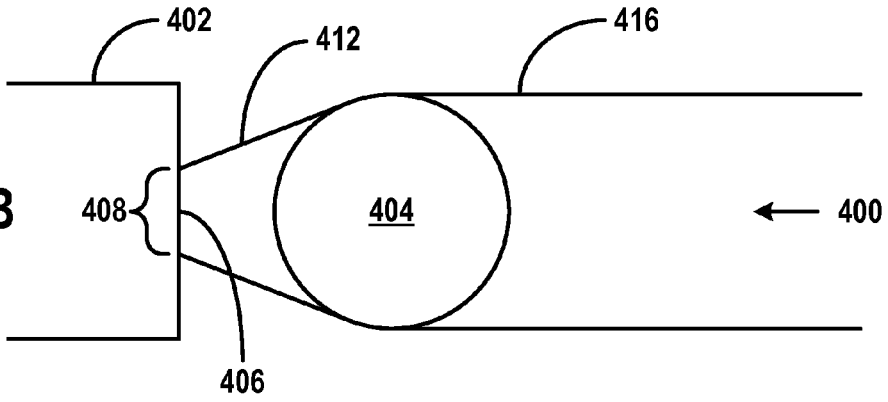

FIG. 4C

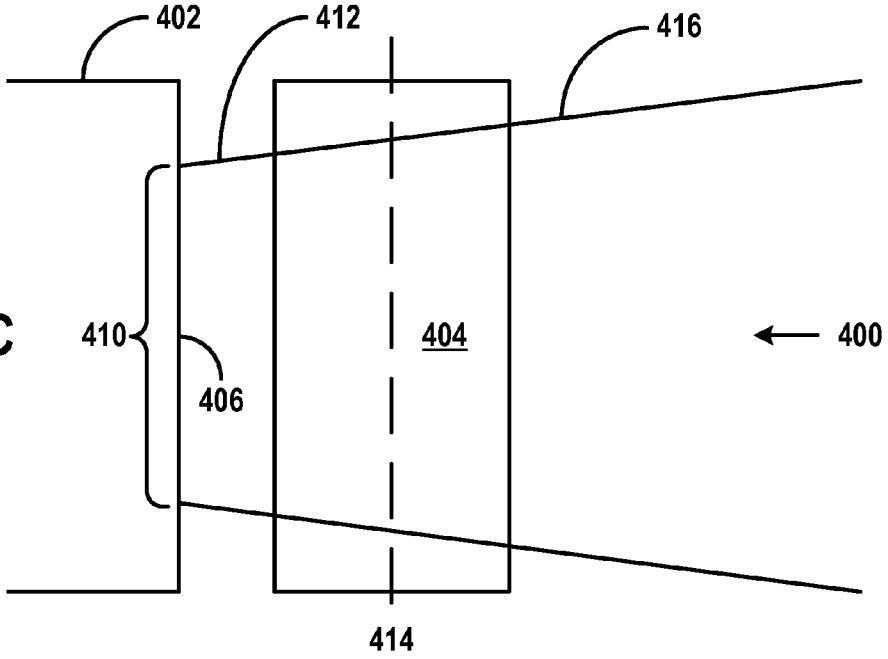

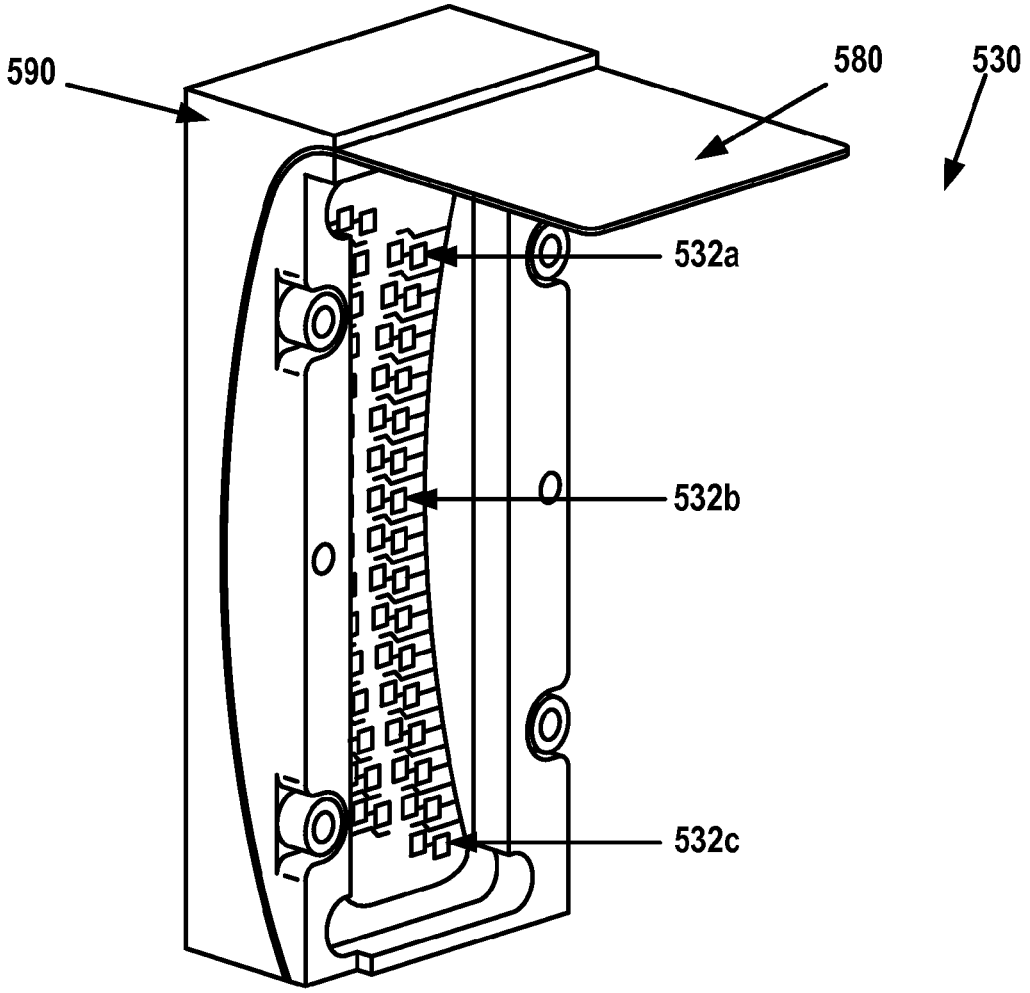
590
580
530
532a
532b
532c

FIG. 5A

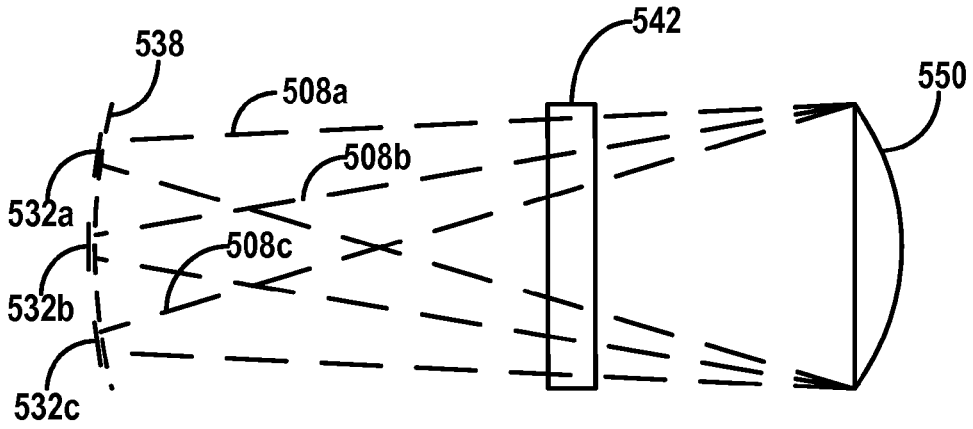
538
508a
542
550
508b
532a
508c
532b
532c

FIG. 5B

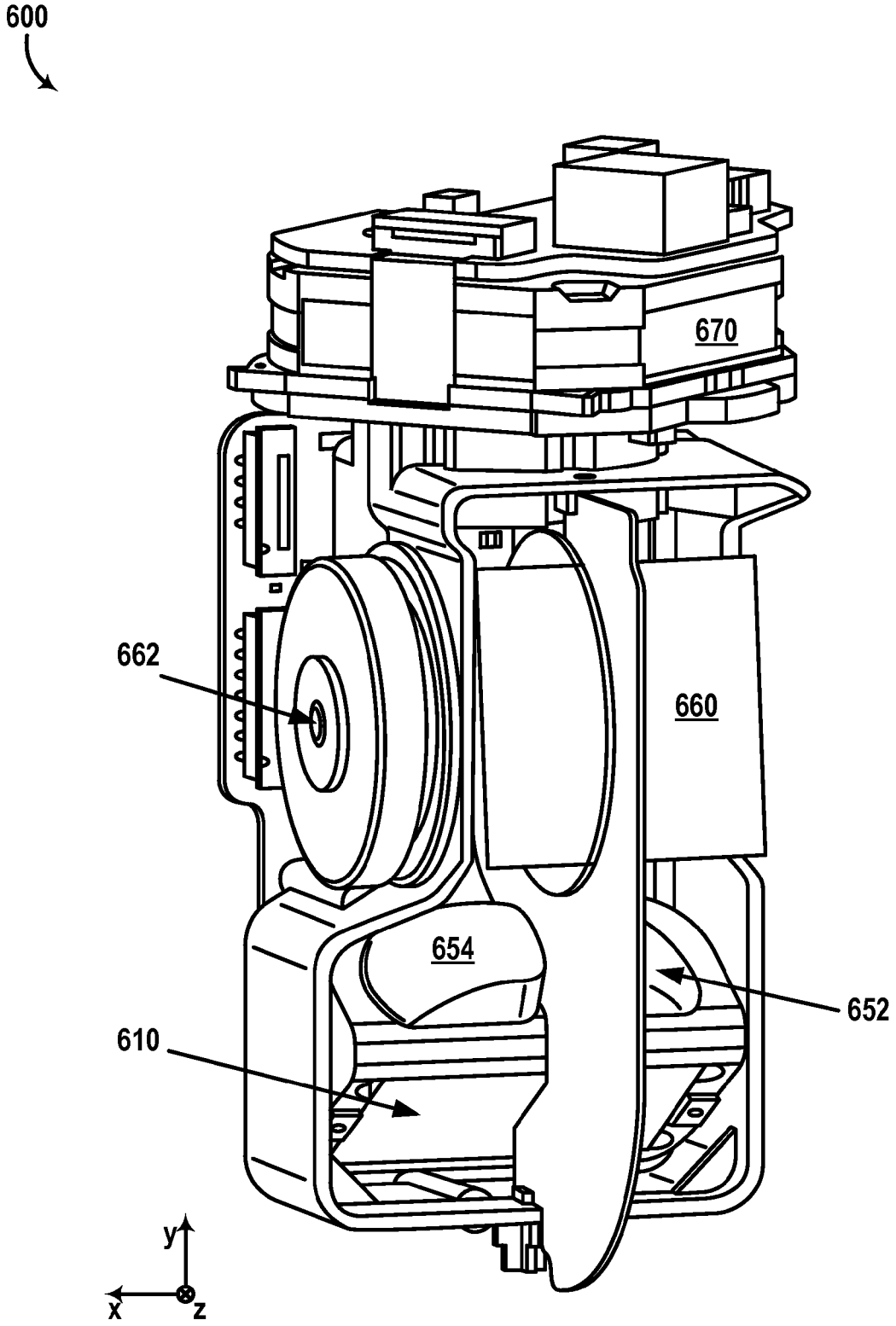

FIG. 6A

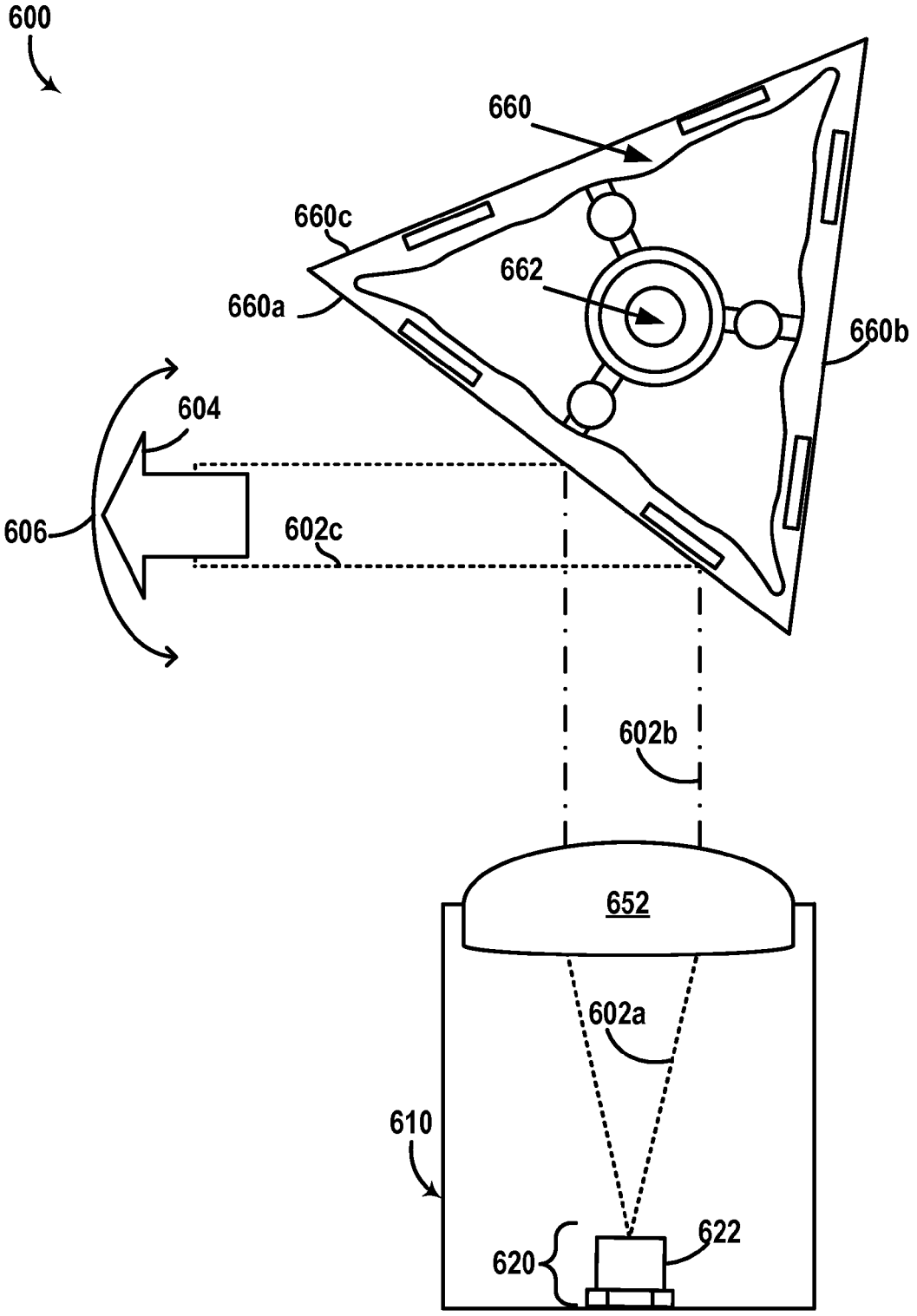
600
660
660c
662
660a
660b
604
606
602c
602b
652
602a
610
622
620

FIG. 6B

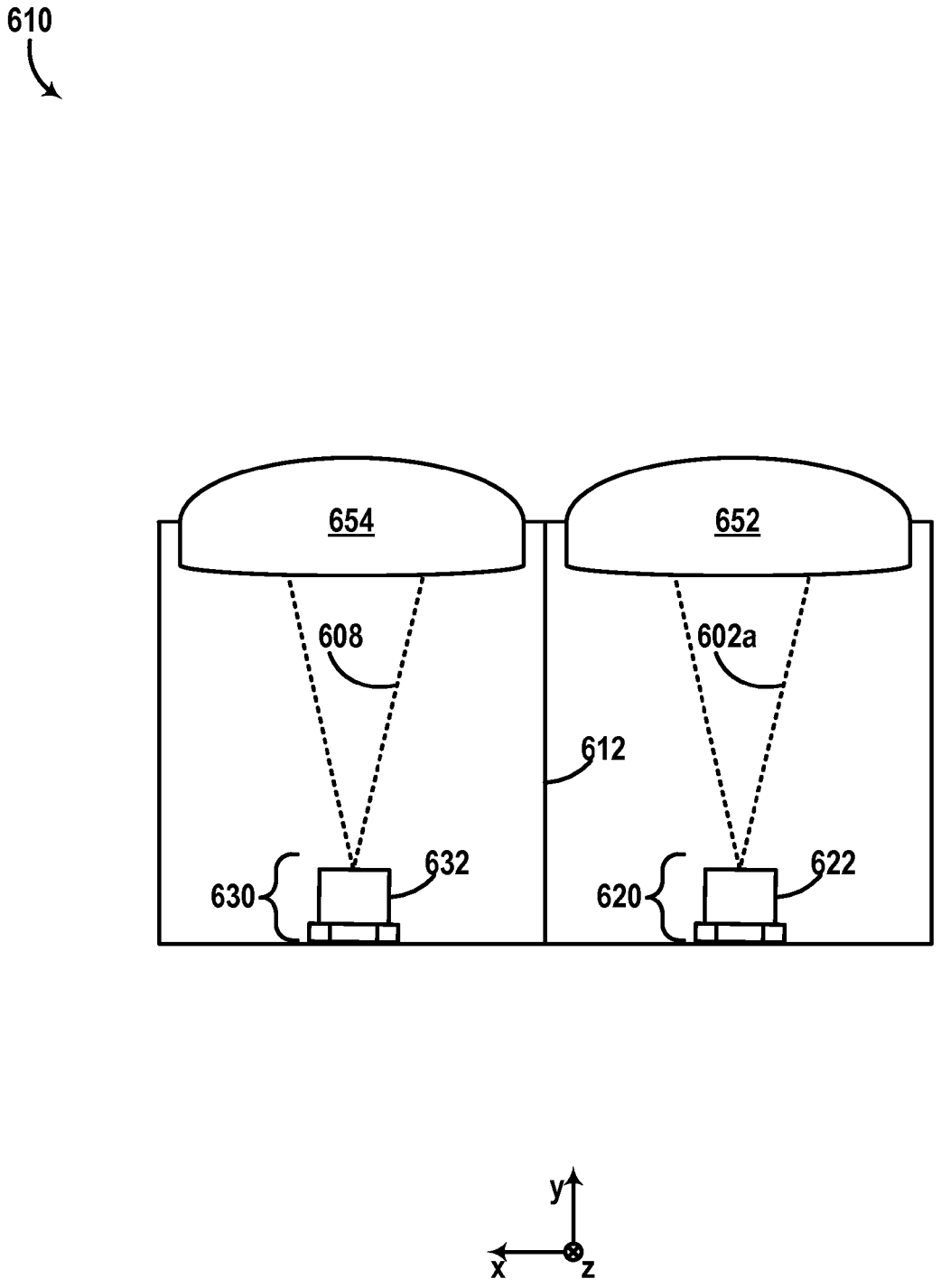

FIG. 6C

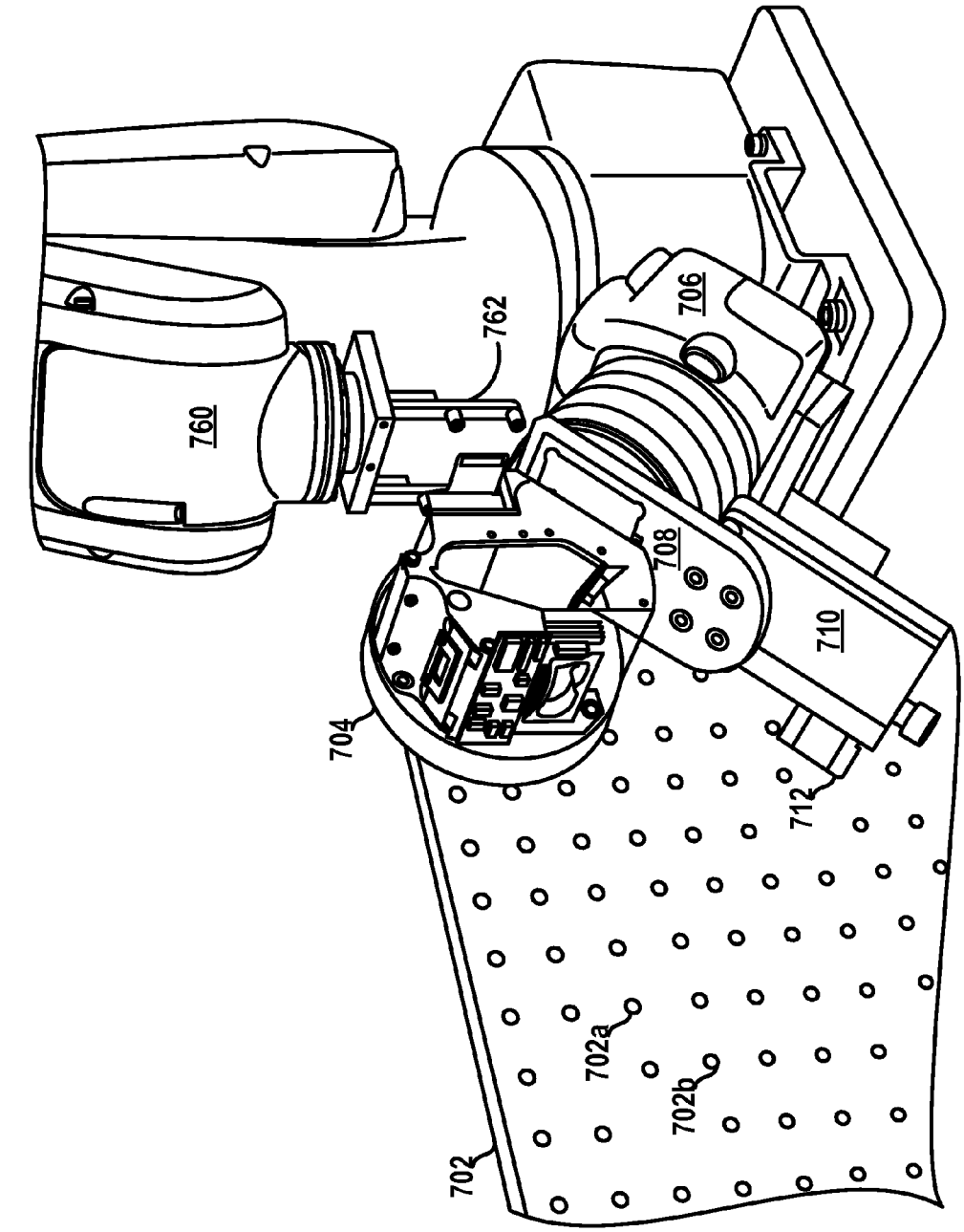

FIG. 7A

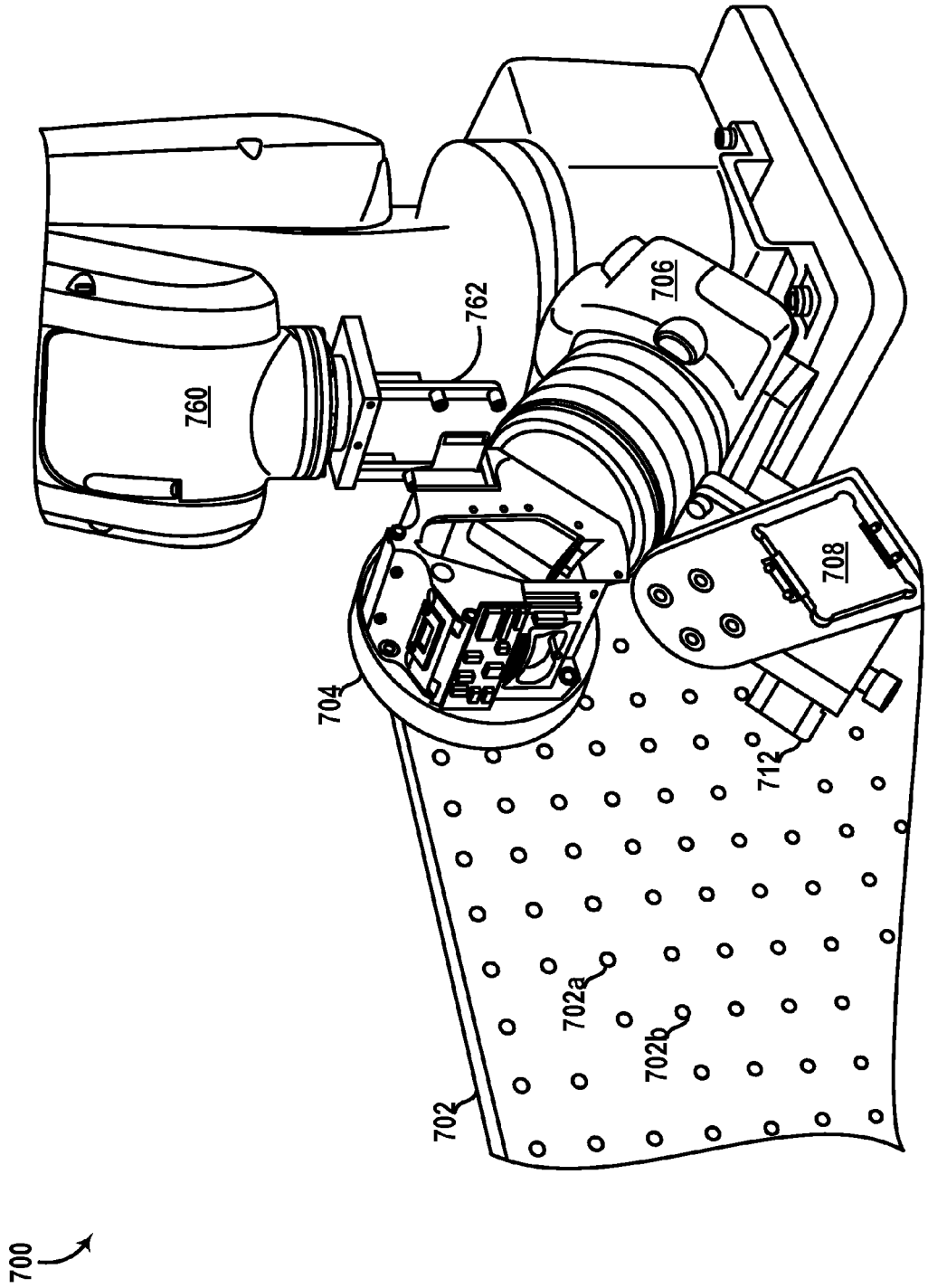

FIG. 7B

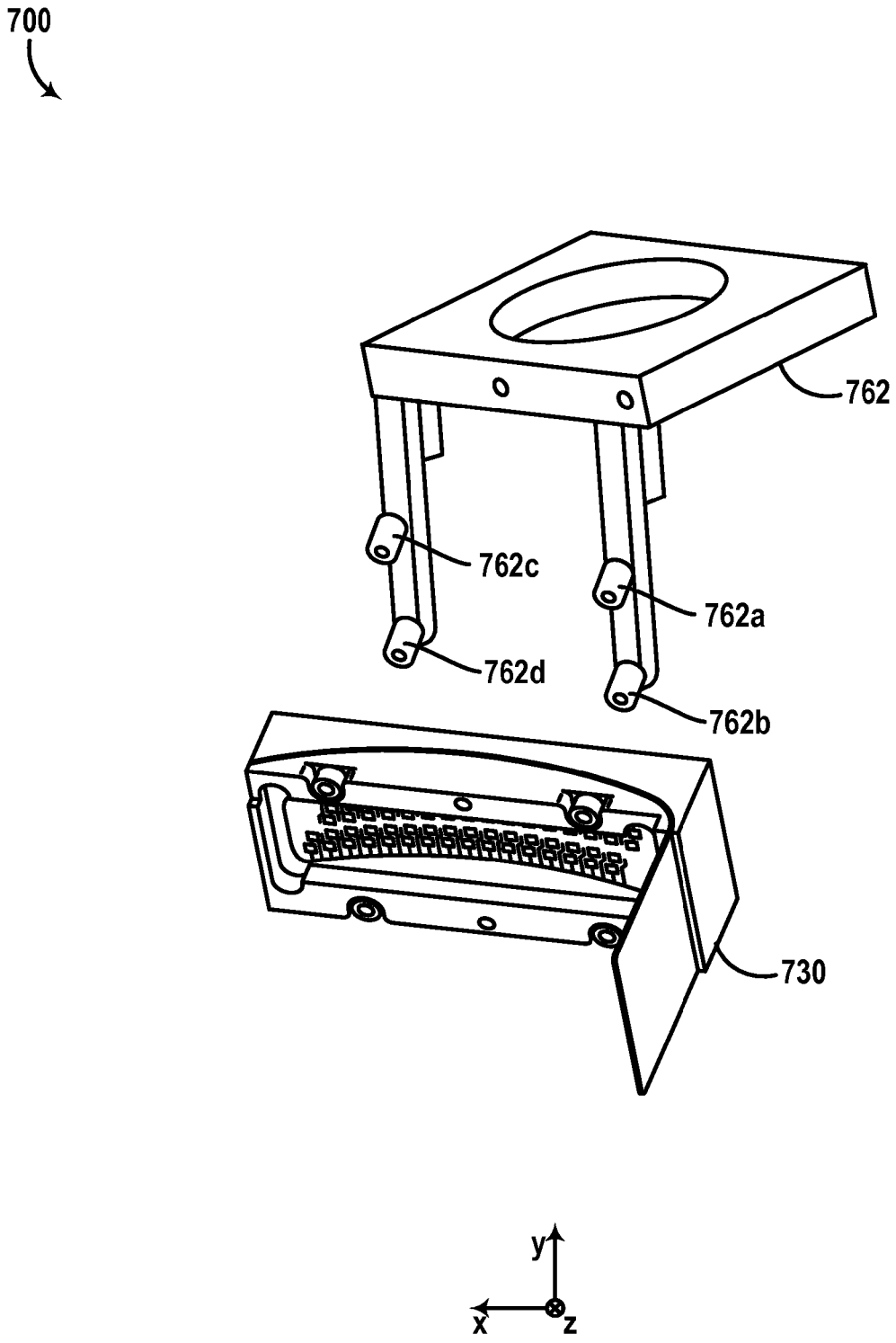

FIG. 7C

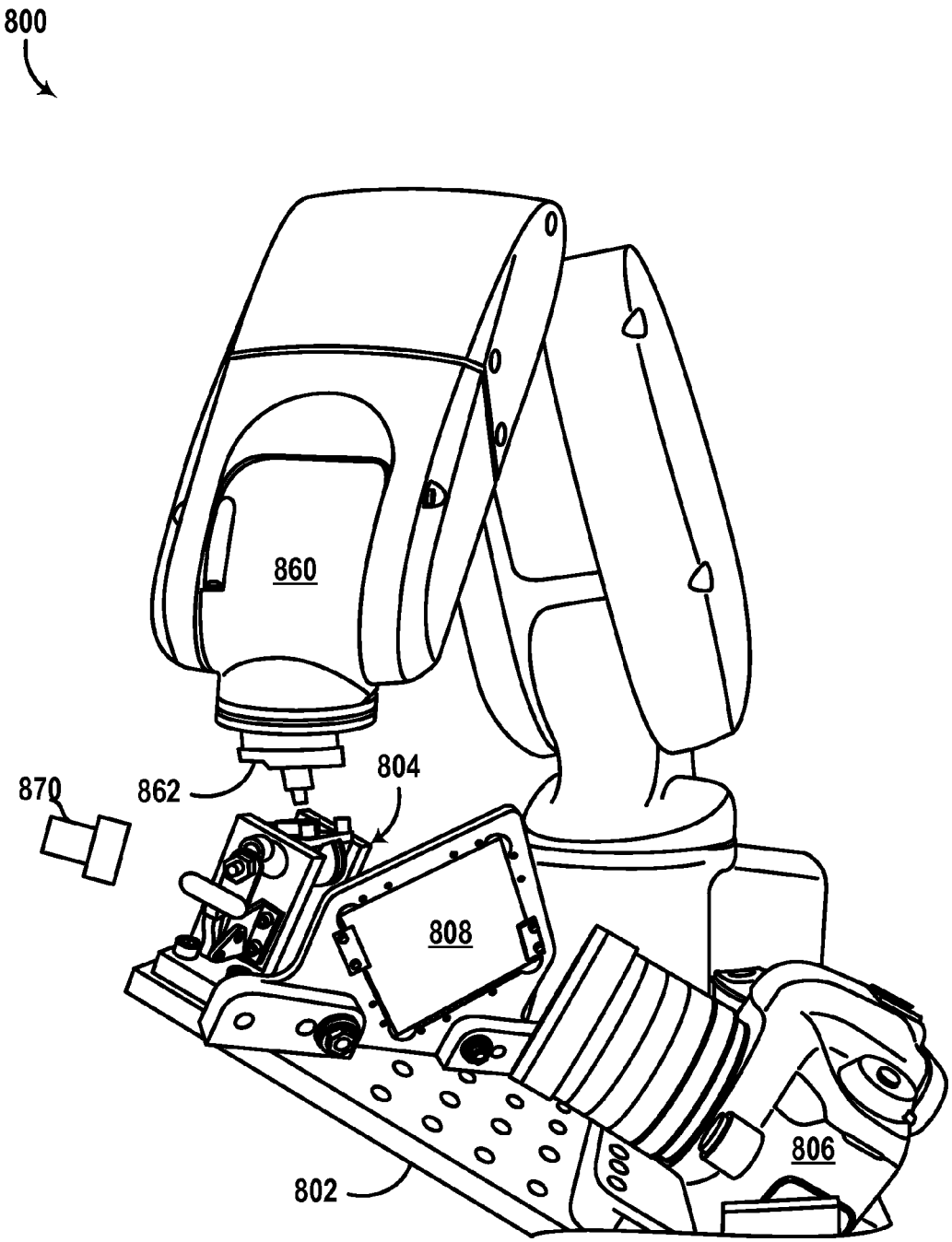

FIG. 8

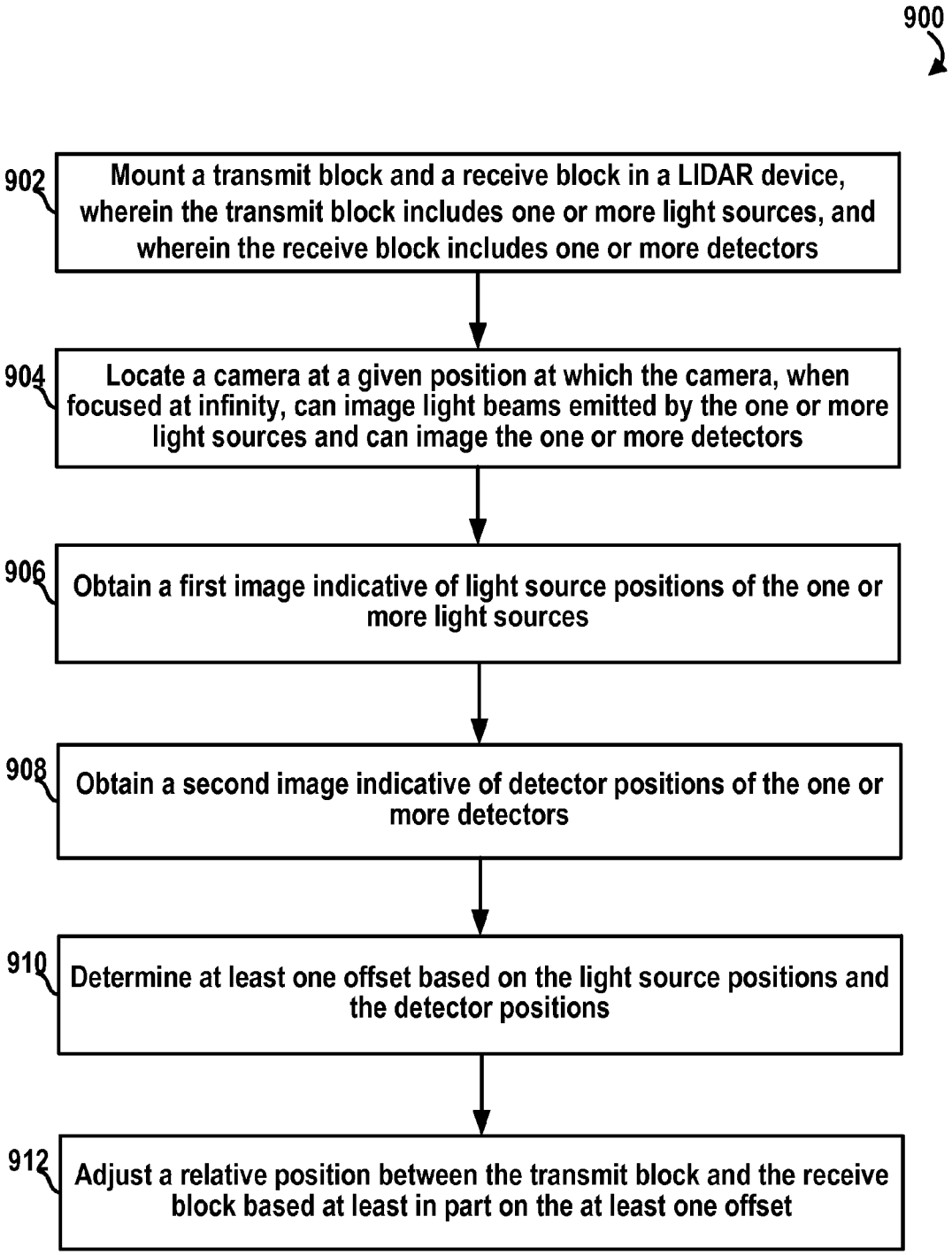
900
902
Mount a transmit block and a receive block in a LIDAR device, wherein the transmit block includes one or more light sources, and wherein the receive block includes one or more detectors
904
Locate a camera at a given position at which the camera, when focused at infinity, can image light beams emitted by the one or more light sources and can image the one or more detectors
906
Obtain a first image indicative of light source positions of the one or more light sources
908
Obtain a second image indicative of detector positions of the one or more detectors
910
Determine at least one offset based on the light source positions and the detector positions
912
Adjust a relative position between the transmit block and the receive block based at least in part on the at least one offset

FIG. 9

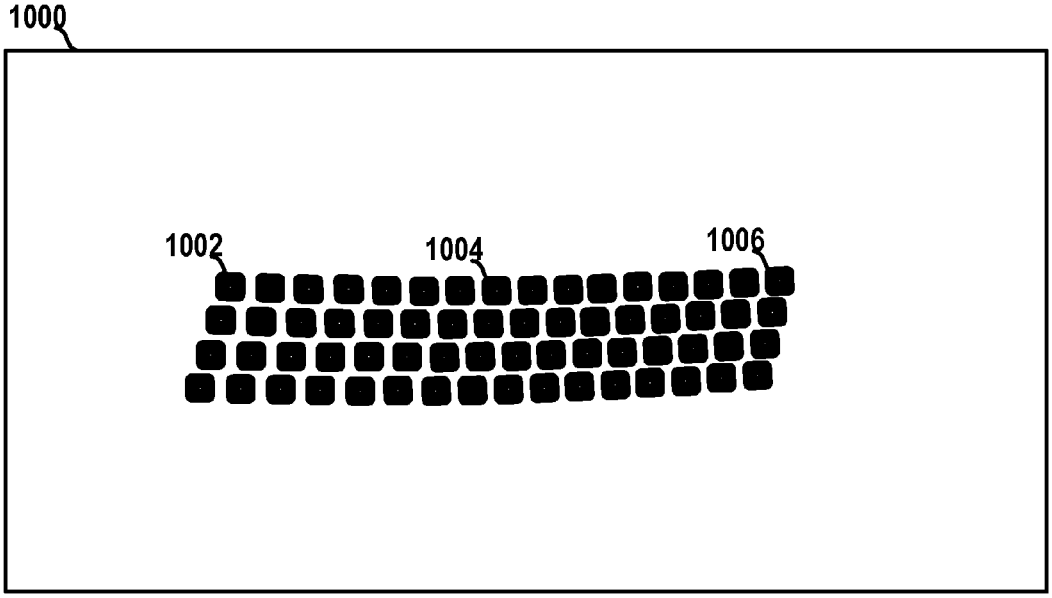

FIG. 10

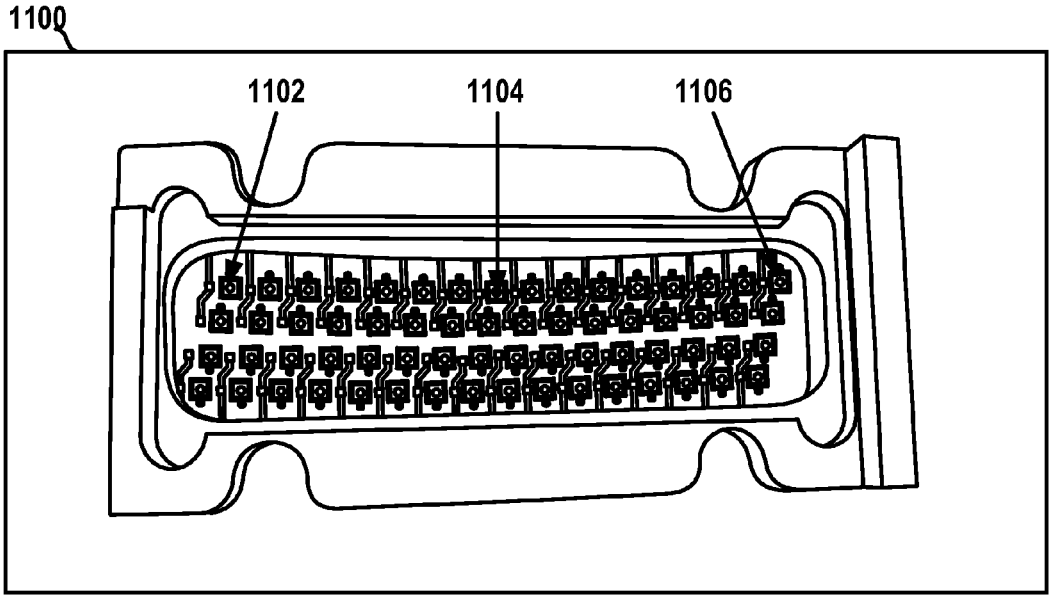

FIG. 11

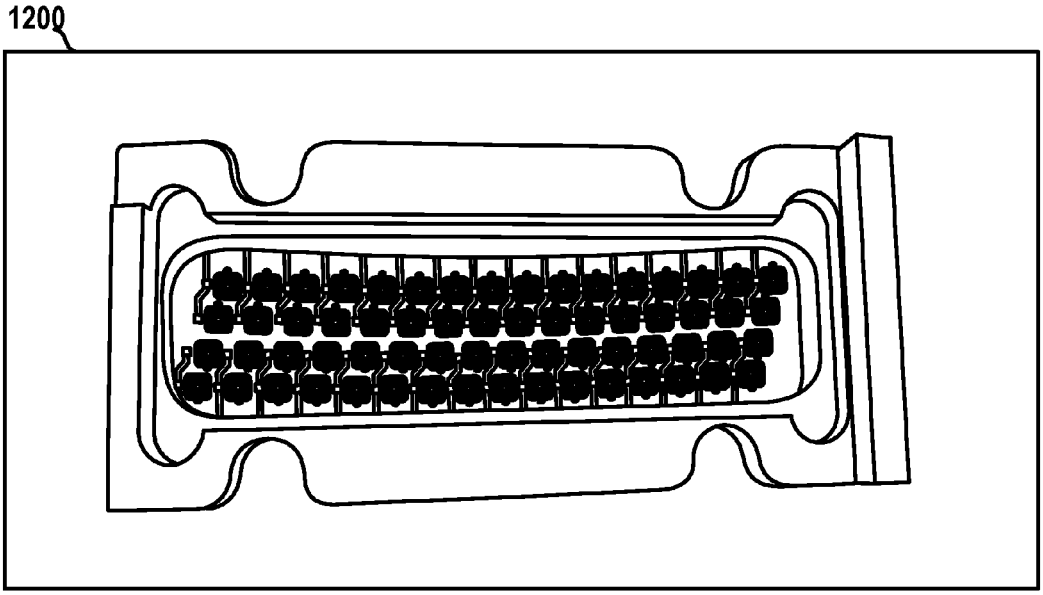

FIG. 12

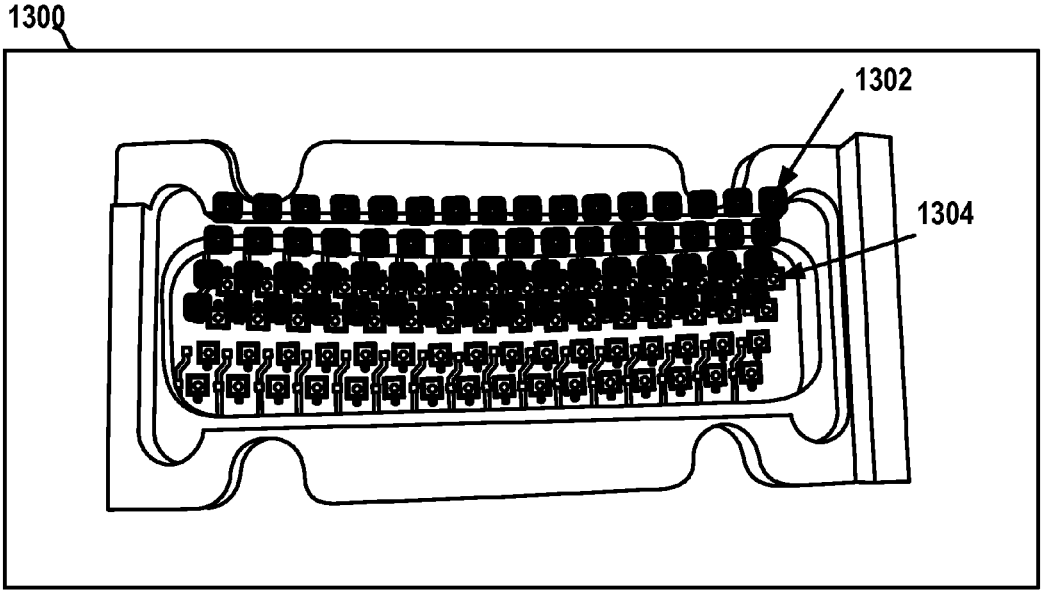

FIG. 13

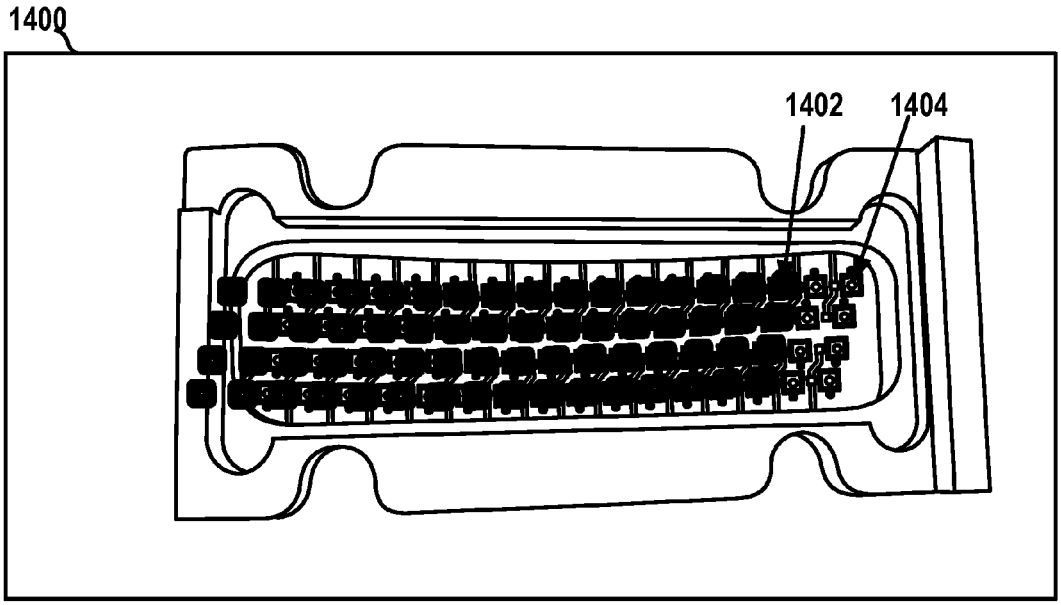

FIG. 14

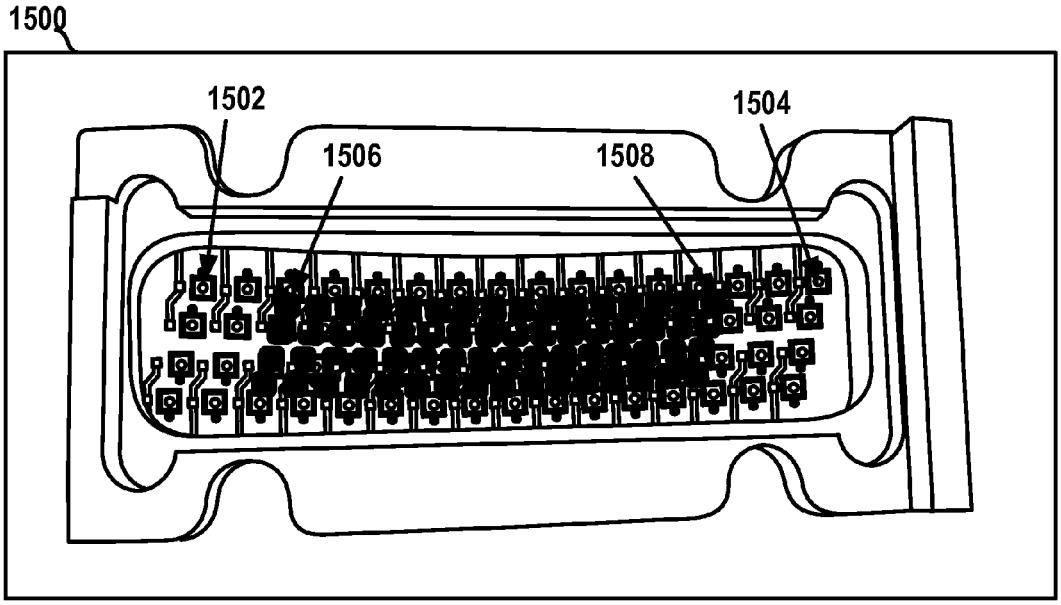

FIG. 15

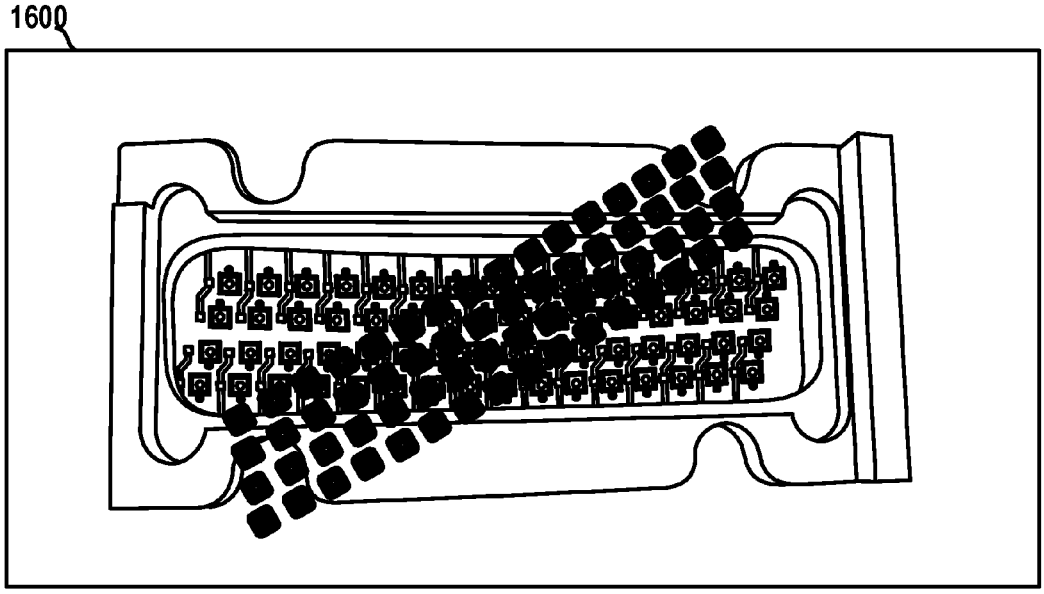

FIG. 16

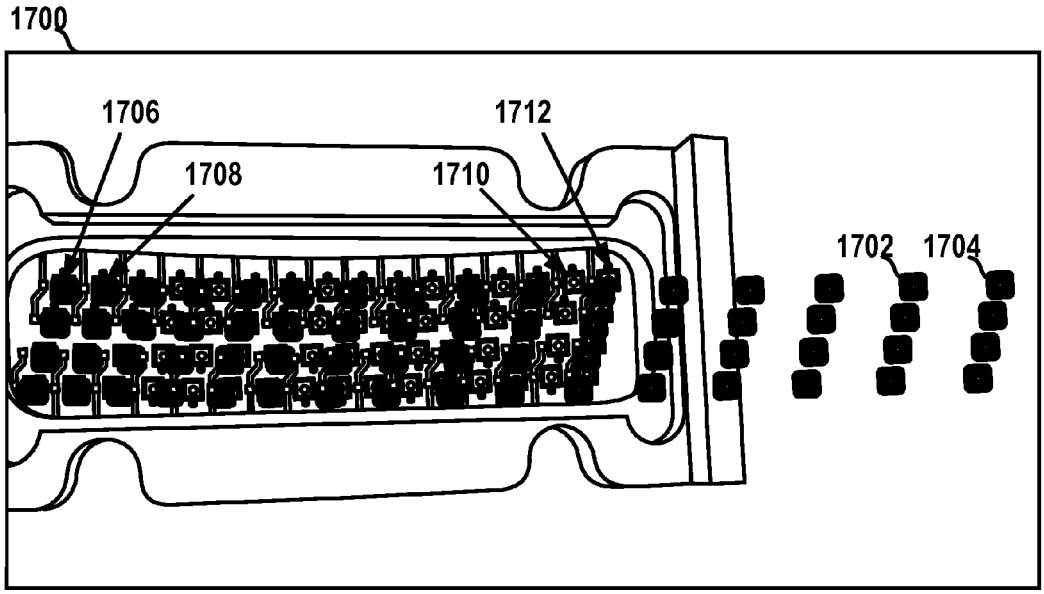

FIG. 17

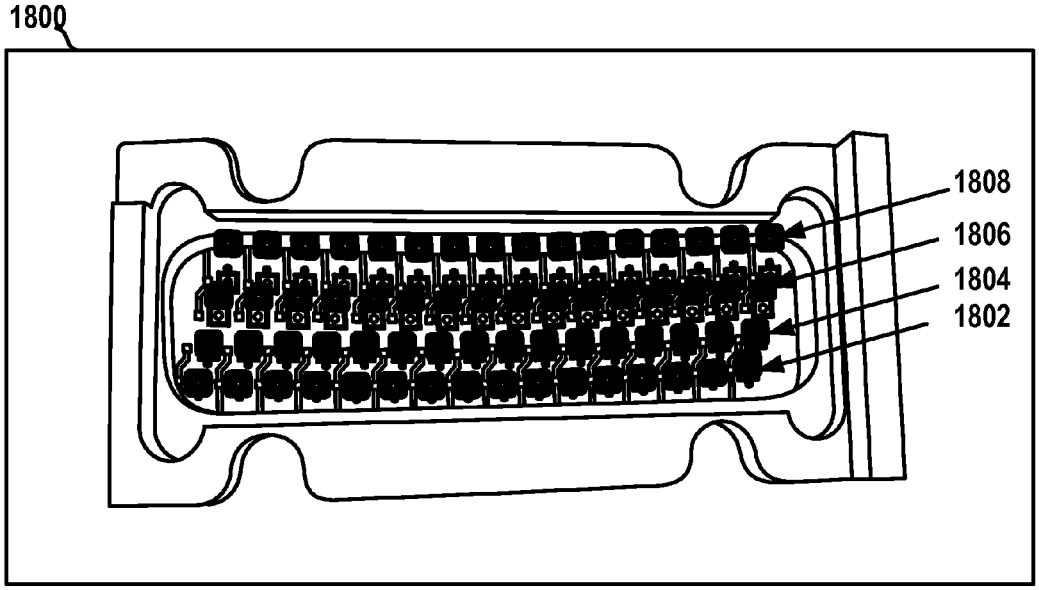

FIG. 18

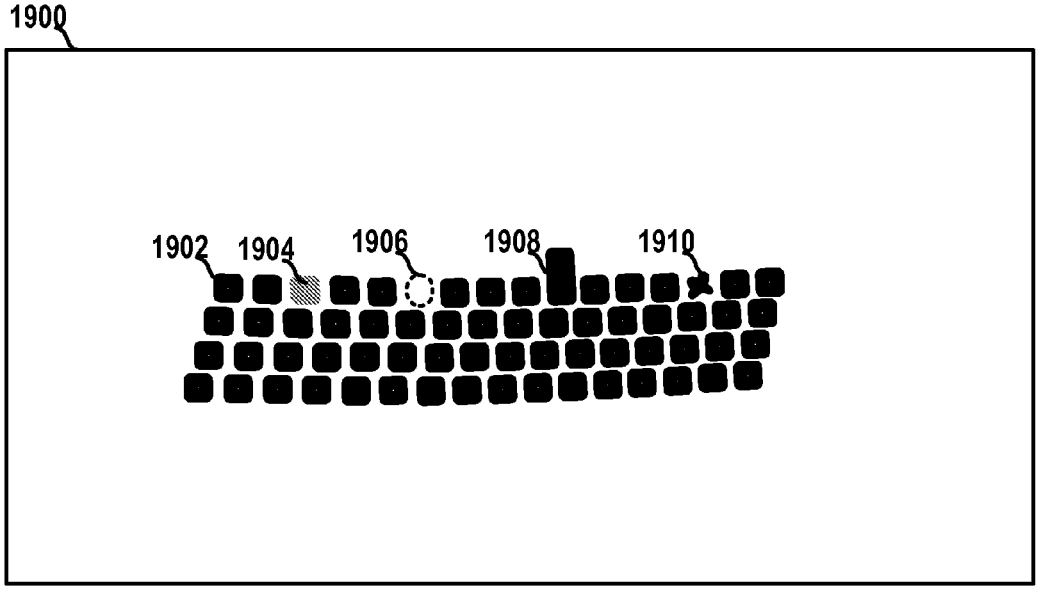

FIG. 19

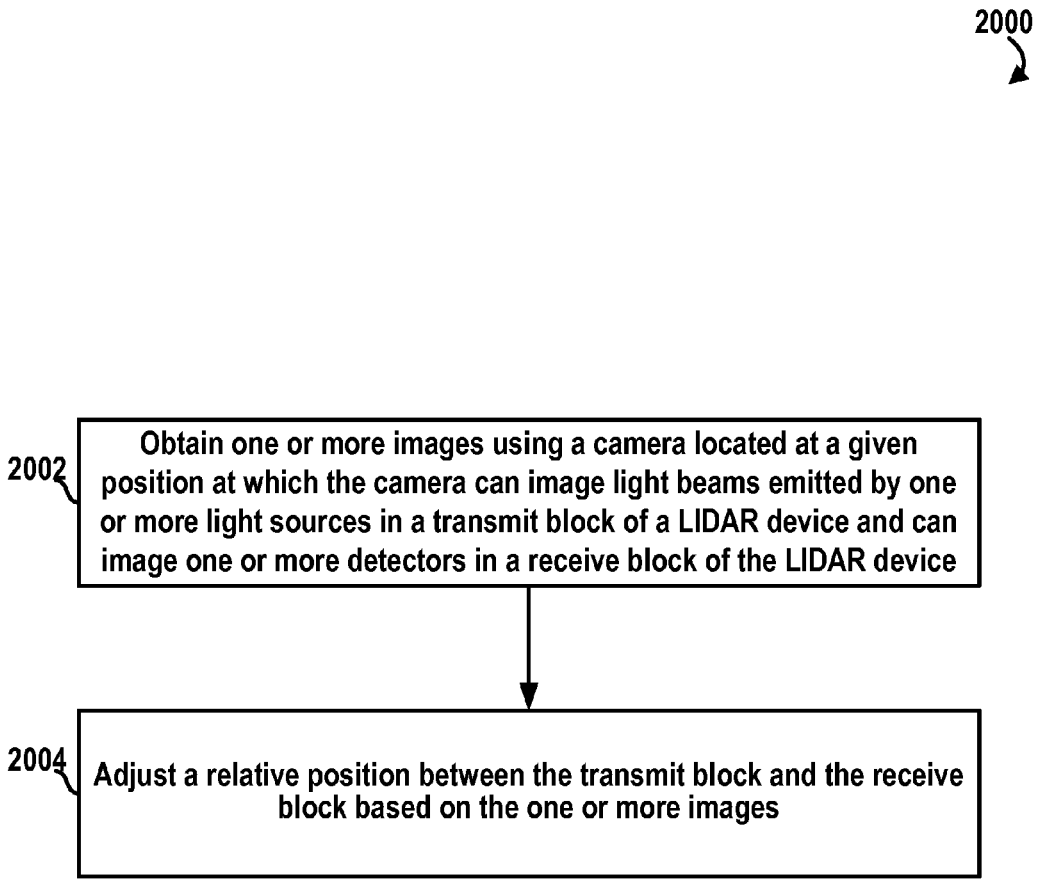
2000
2002
Obtain one or more images using a camera located at a given position at which the camera can image light beams emitted by one or more light sources in a transmit block of a LIDAR device and can image one or more detectors in a receive block of the LIDAR device
2004
Adjust a relative position between the transmit block and the receive block based on the one or more images

FIG. 20

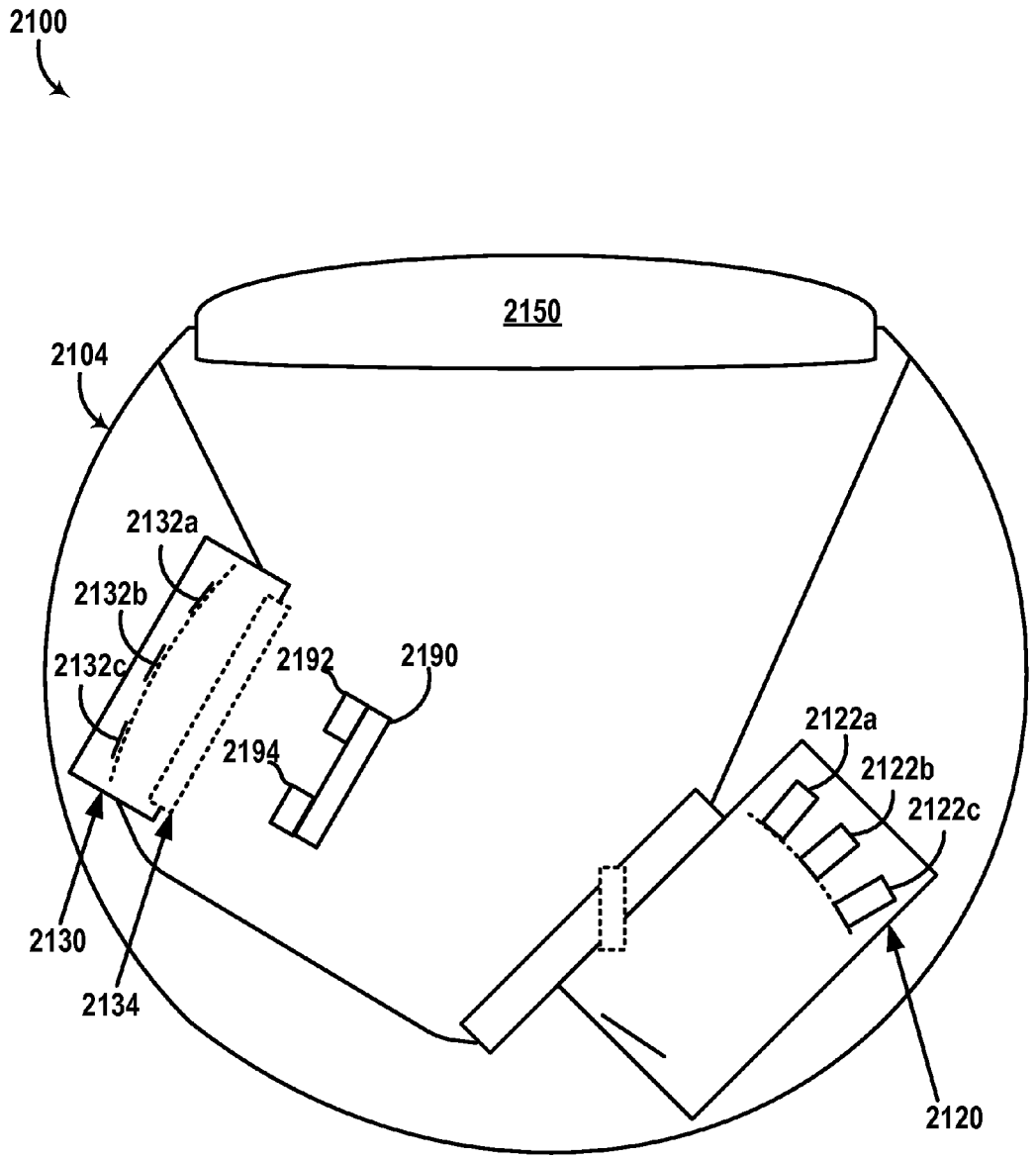
2100
2150
2104
2132a
2132b
2132c
2192
2190
2194
2122a
2122b
2122c
2130
2134
2120

FIG. 21

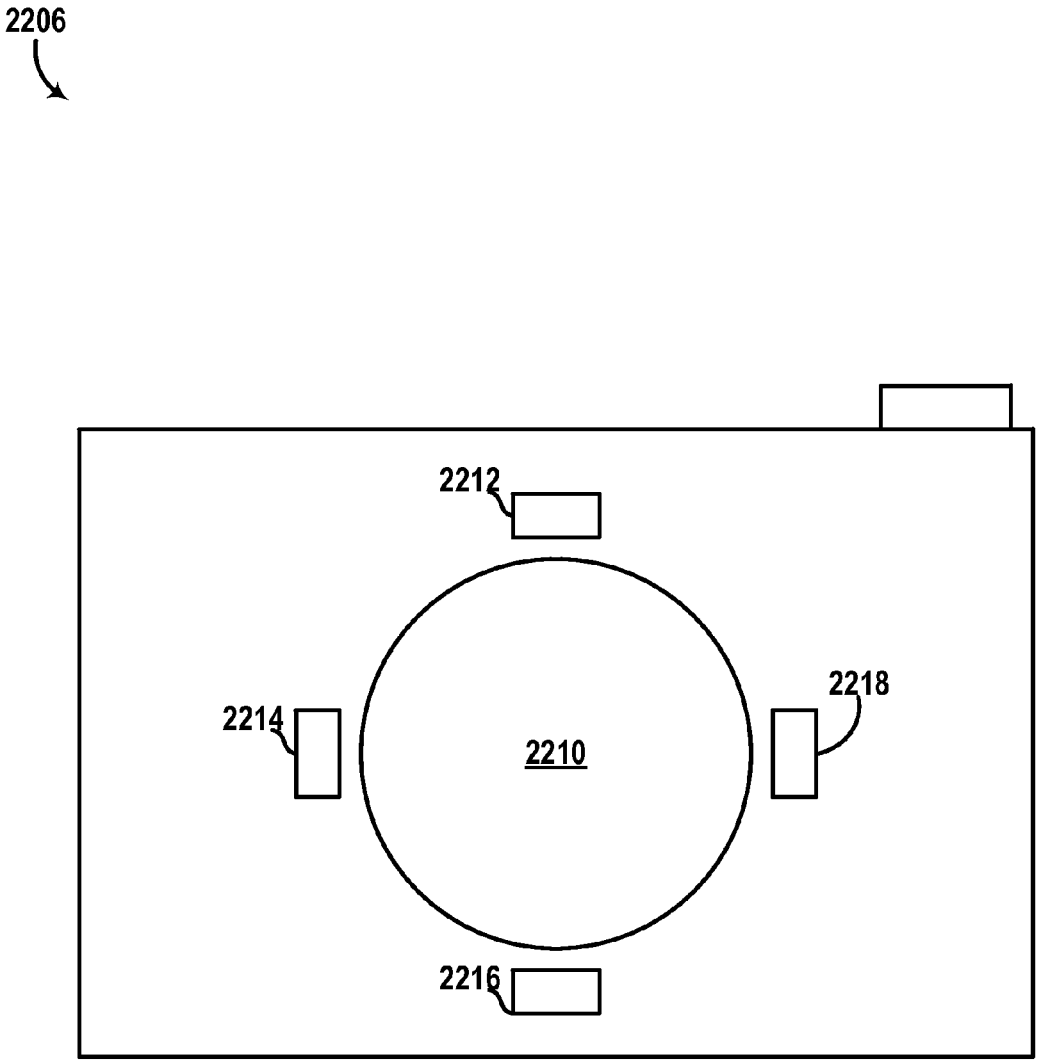

FIG. 22

METHODS AND SYSTEMS FOR LIDAR OPTICS ALIGNMENT

BACKGROUND

Unless otherwise indicated herein, the materials described in this section are not prior art to the claims in this application and are not admitted to be prior art by inclusion in this section.

A LIDAR can estimate distance to environmental features while scanning through a scene to assemble a "point cloud" indicative of reflective surfaces in the environment. Individual points in the point cloud can be determined by transmitting a laser pulse and detecting a returning pulse, if any, reflected from an object in the environment, and determining the distance to the object according to the time delay between the transmission of the transmitted pulse and the reception of the reflected pulse. A laser, or set of lasers, can be rapidly and repeatedly scanned across a scene to provide continuous real-time information on distances to reflective objects in the scene. Combining the measured distances and the orientation of the laser(s) while measuring each distance allows for associating a three-dimensional position with each returning pulse. In this way, a three-dimensional map of points indicative of locations of reflective features in the environment can be generated for the entire scanning zone.

SUMMARY

In one example, a method is provided that involves mounting a transmit block and a receive block in a light detection and ranging (LIDAR) device to provide a relative position between the transmit block and the receive block. The transmit block may include one or more light sources configured to emit light at a source wavelength. The receive block may include one or more detectors configured to detect light at the source wavelength. The method further involves locating a camera at a given position at which the camera, when focused at infinity, can image light beams emitted by the one or more light sources and can image the one or more detectors. The method further involves obtaining a first image using the camera located at the given position and focused at infinity. The first image may be indicative of light source positions of the one or more light sources. The method further involves obtaining a second image using the camera located at the given position and focused at infinity. The second image may be indicative of detector positions of the one or more detectors in the receive block. The method further involves determining at least one offset based on the light source positions indicated by the first image and the detector positions indicated by the second image. The method further involves adjusting the relative position between the transmit block and the receive block based at least in part on the at least one offset.

In another example, a system is provided that includes a mounting platform to mount a light detection and ranging (LIDAR) device that provides a relative position between a transmit block in the LIDAR device and a receive block in the LIDAR device. The transmit block may include one or more light sources configured to emit light at a source wavelength. The receive block may include one or more detectors configured to detect light at the source wavelength. The system also includes a camera located at a given position at which the camera, when focused at infinity, can image light beams emitted by the one or more light sources and can image the one or more detectors. The system also includes an alignment apparatus configured to adjust the relative position between the transmit block and the receive block. The system also includes a controller configured to obtain a first image from the camera located at the given position and focused at infinity. The first image may be indicative of light source positions of the one or more light sources. The controller is also configured to obtain a second image from the camera located at the given position and focused at infinity. The second image may be indicative of detector positions of the one or more detectors in the receive block. The controller is also configured to determine at least one offset based on the light source positions indicated by the first image and the detector positions indicated by the second image. The controller is also configured to cause the alignment apparatus to adjust the relative position between the transmit block and the receive block based at least in part on the at least one offset.

In yet another example, a system is provided that includes a means for mounting a transmit block and a receive block in a light detection and ranging (LIDAR) device to provide a relative position between the transmit block and the receive block. The transmit block may include one or more light sources configured to emit light at a source wavelength. The receive block may include one or more detectors configured to detect light at the source wavelength. The system also comprises means for locating a camera at a given position at which the camera, when focused at infinity, can image light beams emitted by the one or more light sources and can image the one or more detectors. The system also comprises means for obtaining a first image using the camera located at the given position and focused at infinity. The first image may be indicative of light source positions of the one or more light sources. The system also comprises means for obtaining a second image using the camera located at the given position and focused at infinity. The second image may be indicative of detector positions of the one or more detectors in the receive block. The system also comprises means for determining at least one offset based on the light source positions indicated by the first image and the detector positions indicated by the second image. The system also comprises means for adjusting the relative position between the transmit block and the receive block based at least in part on the at least one offset.

These as well as other aspects, advantages, and alternatives, will become apparent to those of ordinary skill in the art by reading the following detailed description, with reference where appropriate to the accompanying figures.

BRIEF DESCRIPTION OF THE FIGURES

FIG. **1** is a block diagram of a system, according to an example embodiment.

FIG. **2**A illustrates a LIDAR device, according to an example embodiment.

FIG. **2**B is a cross-section view of the LIDAR device shown in FIG. **2**A.

FIG. **2**C is a perspective view of the LIDAR device shown in FIG. **2**A with various components removed to illustrate an interior of the LIDAR device.

FIG. **3** illustrates a transmit block, according to an example embodiment.

FIG. **4**A is a view of a light source, according to an example embodiment.

FIG. **4**B is a view of the light source of FIG. **4**A in combination with a cylindrical lens, according to an example embodiment.

FIG. **4**C is another view of the light source and cylindrical lens combination of FIG. **4**B, according to an example embodiment.

FIG. **5**A illustrates a receive block, according to an example embodiment.

FIG. **5**B illustrates a side view of three detectors included in the receive block of FIG. **5**A.

FIG. **6**A illustrates another LIDAR device, according to an example embodiment.

FIG. **6**B illustrates a partial cross-section view of the LIDAR device of FIG. **6**A.

FIG. **6**C illustrates a partial cross-section view of the optics assembly in the LIDAR device of FIG. **6**A.

FIG. **7**A illustrates a system, according to an example embodiment.

FIG. **7**B illustrates an arrangement of the system shown in FIG. **7**A where the light filter is not interposed between the LIDAR device and the camera.

FIG. **7**C illustrates a partial view of the system shown in FIGS. **7**A-**7**B.

FIG. **8** illustrates another system, according to an example embodiment.

FIG. **9** is a flowchart of a method, according to an example embodiment.

FIG. **10** illustrates an image indicative of light source positions, according to an example embodiment.

FIG. **11** illustrates an image indicative of detector positions, according to an example embodiment.

FIG. **12** illustrates an image in a scenario where light sources and detectors are aligned, according to an example embodiment.

FIG. **13** illustrates an image in a scenario where light sources and detectors have an up/down offset, according to an example embodiment.

FIG. **14** illustrates an image in a scenario where light sources and detectors have a left/right offset, according to an example embodiment.

FIG. **15** illustrates an image in a scenario where light sources and detectors have a forward/backward offset, according to an example embodiment.

FIG. **16** illustrates an image in a scenario where light sources and detectors have a roll offset, according to an example embodiment.

FIG. **17** illustrates an image in a scenario where light sources and detectors have a yaw offset, according to an example embodiment.

FIG. **18** illustrates an image in a scenario where light sources and detectors have a pitch offset, according to an example embodiment.

FIG. **19** illustrates an image indicative of a defect or an aberration, according to an example embodiment.

FIG. **20** is a flowchart of another method, according to an example embodiment.

FIG. **21** illustrates a partial cross-section view of yet another system, according to an example embodiment.

FIG. **22** illustrates a front-view of a camera, according to an example embodiment.

DETAILED DESCRIPTION

The following detailed description describes various features and functions of the disclosed systems, devices and methods with reference to the accompanying figures. In the figures, similar symbols identify similar components, unless context dictates otherwise. The illustrative system, device and method embodiments described herein are not meant to be limiting. It may be readily understood by those skilled in the art that certain aspects of the disclosed systems, devices and methods can be arranged and combined in a wide variety of different configurations, all of which are contemplated herein.

Within examples, a LIDAR device may include a transmit block and a receive block. The transmit block may include one or more light sources that transmit light for propagation away from the LIDAR device toward an environment of the LIDAR device. In turn, the transmitted light may reflect off one or more objects in the environment, and the reflected light may propagate back toward the LIDAR device. Further, the receive block may include one or more detectors to detect the reflected light. Through this process, a computing system may process data from the LIDAR device pertaining to the reflected light to determine positions and/or characteristics of various objects in the environment of the LIDAR device.

To facilitate operation of the LIDAR device, a light beam emitted by a given light source and reflected back toward the LIDAR device is received by a corresponding detector. Within examples, systems and methods are provided for alignment of light source(s) and detector(s) in a LIDAR device.

FIG. **1** is a block diagram of a system **100**, according to an example embodiment. The system **100** includes a mounting platform **102**, an alignment apparatus **160**, and a controller **180**. The system **100** may optionally include an auxiliary light source **170**.

The mounting platform **102** may provide a platform for mounting some or all of the components of the system **100**. As shown, the mounting platform **102** mounts a LIDAR device **104** and a camera **106**. In some examples, the mounting platform **102** may also mount a light filter **108**. Further, in some examples, the mounting platform **102** may also mount an actuator **112**. Accordingly, the mounting platform **102** may be formed from one or more solid materials suitable for supporting the various components, such as plastics or metals among other possibilities. In some examples, some of the components shown to be mounted on the mounting platform **102** may alternatively be mounted to a separate structure (not shown) or otherwise coupled to the system **100**. For instance, the camera **106** and/or the light filter **108** may be alternatively positioned and/or mounted outside the mounting platform **102**.

The LIDAR device **104** includes a transmit block **120** and a receive block **130**. As shown, in some examples, the LIDAR device **104** may optionally include a lens **150**.

The transmit block **120** includes one or more light sources **122** that may be configured to emit one or more light beams **124**. Although not shown in FIG. **1**, the transmit block **120** may include additional components such as a mirror or an exit aperture to condition and/or redirect the light beams **124**. The one or more light sources **122** may include laser diodes, light emitting diodes (LEDs), vertical cavity surface emitting lasers (VCSEL), organic light emitting diodes (OLEDs), polymer light emitting diodes (PLED), light emitting polymers (LEP), liquid crystal displays (LCD), microelectromechanical systems (MEMS), or any other device configured to selectively transmit, reflect, and/or emit light beams **124** at a source wavelength. The source wavelength, for example, may include ultraviolet, visible, and/or infrared portions of the electromagnetic spectrum. In one embodiment, the source wavelength is 905 nm. Additionally, in some examples, the light sources **122** may be configured to emit the light beam(s) **124** in the form of pulses. In some

examples, the light sources **122** may be disposed on one or more substrates (e.g., printed circuit boards (PCB), flexible PCBs, etc.).

The receive block **130** includes one or more detectors **132** that may be configured to receive light from an environment of the LIDAR device **104**. In one example, a given detector of the detectors **132** is configured and arranged to receive a given light beam of the light beams **124** that is reflected off an object in the environment of the LIDAR device **104** toward the given detector. Through this process, for example, the LIDAR device **104** may detect various objects in the environment by emitting light beams **124** using the light sources **122** and detecting reflections of the light beams **124** using the detectors **132**. Although not shown, in some examples, the receive block **130** may include additional components such as an inert gas, an entrance aperture (e.g., half-mirror), and/or any other component to filter and/or condition light propagating toward the detectors **132**. The detector(s) **132** may comprise photodiodes, avalanche photodiodes, phototransistors, cameras, active pixel sensors (APS), charge coupled devices (CCD), cryogenic detectors, or any other sensor of light. In one embodiment, the detector(s) **132** may be configured to detect light at the source wavelength (e.g., 905 nm, etc.) of the light beams **124** emitted by the light sources **122** and/or reflections thereof.

The lens **150** may be optionally included in the LIDAR device **104** and may be configured to collimate the emitted light beams **124** and/or focus light propagating toward the detectors **132**. In one embodiment, the lens **150** may be a single lens having an optical power to both collimate the light beams **124** and focus light onto the detectors **132**. In another embodiment, the lens **150** may include two separate lenses. For example, a first lens may collimate the light beam(s) **124** emitted by the light source(s) **122**, and a second lens may focus light propagating toward the LIDAR device **104** onto the detector(s) **132**. Other lens configurations are possible as well (e.g., multiple lenses for collimation and/or multiple lenses for focus, etc.).

In some examples, the LIDAR device **104** may include additional, fewer, or different components than those shown in FIG. **1**. Thus, in some embodiments, the system **100** may be utilized for assembly, manufacture, and/or calibration of various LIDAR devices having various configurations, such as the LIDAR device **104** or any other LIDAR device. Accordingly, in some examples, the LIDAR device **104** may be removably mounted to the mounting platform **102** of the system **100** to facilitate such calibration or assembly.

In some examples, the various components of the LIDAR device **104** such as the transmit block **120**, receive block **130**, and the lens **150** can be removably mounted in predetermined positions within the LIDAR device **104** to reduce burden of calibrating the arrangement of each component and/or subcomponents included in each component. In these examples, the system **100** may adjust the relative position between the transmit block **120** and the receive block **130** to align the one or more light sources **122** with the one or more detectors **132**. Alternatively, in other examples, the system **100** may be configured to adjust the relative position between each of the subcomponents (e.g., each light source of light sources **122**, each detector of detectors **132**, etc.).

The camera **106** may be any camera (e.g., a still camera, a video camera, etc.) configured to capture images of the LIDAR device **104**. In some examples, the camera **106** may be located at a given position at which the camera **106** can image the light beams **124** emitted by the one or more light sources **122**, and can image the one or more detectors **132**. In one embodiment, the camera may be focused at infinity when capturing such images. By way of example, the camera may be mounted to have a field-of-view along the path of the light beams **124** (e.g., facing the lens **150**, etc.).

As an example scenario for operation of the camera **106**, the LIDAR device **104** may then be configured to cause the light sources **122** to emit the light beams **124** toward the camera **106**. In turn, the camera **106** may provide a first image of the light beams **124**. The first image, for instance, may indicate light source position(s) (e.g., bright pixels in the first image, etc.) of the light source(s) **122**. In the scenario, the camera may also obtain a second image indicative of detector position(s) of the detector(s) **132**. Other scenarios are possible as well and are described in greater detail within exemplary embodiments herein.

The light filter **108** may be optionally included in the system **100** to facilitate capture and/or processing of the images described above. For instance, the light filter **108** may be positioned along a path of the light beams **124** between the LIDAR device **104** and the camera **106**. In one example, the light filter **108** may be configured to attenuate light within a wavelength range that includes the source wavelength of the light source(s) **122**. In this example, the attenuation of the light may facilitate contrasting pixels in the first image that are associated with the light beams **124** against surrounding pixels. Further, in this example, the attenuation of the light may protect the camera **106** from the intensity of the light beams **124**. In another example, the light filter **108** may be configured to attenuate light within another wavelength range that does not include the source wavelength of the light source(s) **122**. In this example, the images obtained by the camera **106** may represent features of interest (e.g., light source(s) **122**, detector(s) **132**, etc.) in the LIDAR device **104** more clearly due to the light filter **108** attenuating background light having other wavelengths. Other configurations of the light filter **108** are possible as well and are described in greater detail within exemplary embodiments herein.

The actuator **112** may be optionally included in the system **100**. The actuator **112** may be configured to adjust the position of the light filter **108**. For instance, the actuator **112** may be configured to actuate the light filter **108** to a first position where the light filter **108** is interposed between the LIDAR device **104** and the camera **106**, or to a second position where the light filter **108** is not interposed between the LIDAR device **104** and the camera **106**. Example actuators may include motors, stepper motors, pneumatic actuators, hydraulic pistons, relays, solenoids, and piezoelectric actuators among other possibilities.

The alignment apparatus **160** may include any device that couples to one or more of the components in the LIDAR device **104** to adjust the relative position between the transmit block **120** and the receive block **130**. By way of example, the alignment apparatus **160** may be a robotic arm that physically couples to the receive block **130** to rotate and/or translate the position of the receive block **130** in the LIDAR **104**. Alternatively or additionally, for example, the robotic arm may adjust the position of the transmit block **120**. In some examples, the alignment apparatus **160** may adjust the relative position between the transmit block **120** and the receive block **130** based on image(s) obtained by the camera **106**. For instance, the alignment apparatus **160** may adjust the relative position to align one or more of the light beams **124** emitted by the light sources **122** with one or more of the detectors **132**.

The system **100** may optionally include an auxiliary light source **170** that emits light **174** at the source wavelength to illuminate the receive block **130**. The structure and form of

the auxiliary light source **170** (e.g., LED, etc.) may be similar to the light sources **122**. In one example, where the camera **106** is configured to capture images when focused at infinity for the source wavelength the light sources **122**, the auxiliary light source **170** may illuminate the detectors **132** to facilitate the camera **106** obtaining the second image of the detectors **132** while also focused at infinity for the same source wavelength.

In some examples, the light filter **108** may be configured to remain interposed between the camera **106** and the LIDAR device **104** during capture of the first image (e.g., of the light beams **124**) and during capture of the second image (e.g., of the detectors **132**). In these examples, the illuminating light **174** from the auxiliary light source **170** may allow the camera **106** to capture an image of the detectors **132** while the light filter **108** is interposed.

In other examples, the system **100** may be configured to move the light filter **108** to another position other than the position between the camera **106** and the LIDAR device **104** prior to the camera **106** obtaining the second image of the detectors **132**. For instance, the light filter **108** may be moved by the actuator **112**. In these examples, the camera **106** may rely on background light to obtain the second image of the detectors **132**, or the system **100** may utilize the auxiliary light source **170** to illuminate the receive block **130**.

The controller **180** may include one or more processors configured to operate some or all of the components of the system **100** in line with the discussion above. To that end, the controller **180** may be coupled to the various components via a wired or wireless interface (not shown). In some examples, the controller **180** may execute program functions stored in a computer readable medium (not shown) to cause the system **100** to perform various functions and processes of the present method.

In a first example, the controller **180** may cause a power source (not shown) to provide power to the various components of the system **100**. In a second example, the controller **180** may cause the transmit block **120** of the LIDAR device **104** to emit the light beams **124**. In a third example, the controller **180** may operate an actuator (not shown) to position the light filter **108** between the LIDAR device **104** and the camera **106**, or to position the light filter **108** at any other position. In a third example, the controller **180** may operate the camera **106** to obtain the first image (e.g., of the light beams **124**) and the second image (e.g., of the detectors **132**) in line with the discussion above. In a fourth example, the controller **180** may operate the alignment apparatus **160** to adjust the relative position between the transmit block **120** and the receive block **130**. In a fifth example, the controller **180** may operate the alignment apparatus **160** to mount (or unmounts) various components (e.g., LIDAR device **104**, etc.) to the mounting platform **102**. In a sixth example, the controller **180** may operate the auxiliary light source **170** to illuminate the receive block **130** with light **174**. In a seventh example, the controller **180** may operate the actuator **112** to move the light filter **108**. Other examples are possible as well and are described in greater detail within exemplary embodiments herein.

The system **100** may include additional, fewer, or different components than those shown, and may perform other functions as well. In one example, the system **100** may include a display (not shown) for displaying image(s) obtained using the camera **106**. For instance, the display may have a graphical user interface (GUI) for displaying and/or interacting with images captured by the camera **106**, and a human operator or a computer operator may interact with the GUI to adjust the relative position between the transmit block **120** and the receive block **130** by manipulating the images in the GUI. Other procedures are possible as well for controlling the system **100** in accordance with the present disclosure.

FIG. **2**A illustrates a LIDAR device **200**, according to an example embodiment. The LIDAR **200** illustrates an example LIDAR device that can be used with a system such as the system **100**. For instance, the LIDAR device **200** may be similar to the LIDAR device **104** of the system **100**, and may be similarly mounted to the mounting platform **104** to adjust the relative position between light sources and detectors of the LIDAR **200**.

As shown, the LIDAR device **200** includes a housing **210** and a lens **250**. Additionally, light beams **204** emitted by the first LIDAR device **200** propagate from the lens **250** along a viewing direction of the first LIDAR **200** toward an environment of the LIDAR device **200**, and reflect off one or more objects in the environment as reflected light **206**.

The housing **210** included in the LIDAR device **200** can provide a platform for mounting the various components included in the LIDAR device **200**. The housing **210** can be formed from any material capable of supporting the various components of the LIDAR device **200** included in an interior space of the housing **210**. For example, the housing **210** may be formed from a solid material such as plastic or metal among other possibilities.

In some examples, the housing **210** can be configured to have a substantially cylindrical shape and to rotate about an axis of the LIDAR device **200**. For example, the housing **210** can have the substantially cylindrical shape with a diameter of approximately 10 centimeters. In some examples, the axis is substantially vertical. By rotating the housing **210** that includes the various components, in some examples, a three-dimensional map of a 360-degree view of the environment of the LIDAR device **200** can be determined without frequent recalibration of the arrangement of the various components of the LIDAR device **200**. Additionally or alternatively, in some examples, the LIDAR device **200** can be configured to tilt the axis of rotation of the housing **210** to control the field of view of the LIDAR device **200**.

The lens **250** mounted to the housing **210** can have an optical power to both collimate the emitted light beams **204**, and focus the reflected light **205** from one or more objects in the environment of the LIDAR device **200** onto detectors in the LIDAR device **200**. In one example, the lens **250** has a focal length of approximately 120 mm. By using the same lens **250** to perform both of these functions, instead of a transmit lens for collimating and a receive lens for focusing, advantages with respect to size, cost, and/or complexity can be provided.

The LIDAR device **200** can be mounted on a mounting structure **260** that rotates about an axis to provide a 360-degree view of the environment surrounding the LIDAR device **200**. In some examples, the mounting structure **260** may comprise a movable platform that may tilt in one or more directions to change the axis of rotation of the LIDAR device **200**.

FIG. **2**B is a cross-section view of the first LIDAR **200** shown in FIG. **2**A. As shown, the housing **210** houses a transmit block **220**, a receive block **230**, a shared space **240**, and the lens **250**. For purposes of illustration, FIG. **2**B shows an x-y-z axis, in which the z-axis is in a substantially vertical direction.

The transmit block **220** includes a plurality of light sources **222***a-c* arranged along a curved focal surface **228** defined by the lens **250**. The plurality of light sources **222***a-c*

can be configured to emit, respectively, the plurality of light beams **202***a-c* having wavelengths within a wavelength range. For example, the plurality of light sources **222***a-c* may comprise laser diodes that emit the plurality of light beams **202***a-c* having the wavelengths within the wavelength range. The plurality of light beams **202***a-c* are reflected by mirror **224** through an exit aperture **226** into the shared space **240** and towards the lens **250**.

The light sources **222***a-c* can include laser diodes, light emitting diodes (LED), vertical cavity surface emitting lasers (VCSEL), organic light emitting diodes (OLED), polymer light emitting diodes (PLED), light emitting polymers (LEP), liquid crystal displays (LCD), microelectromechanical systems (MEMS), or any other device configured to selectively transmit, reflect, and/or emit light to provide the plurality of emitted light beams **202***a-c*. In some examples, the light sources **222***a-c* can be configured to emit the emitted light beams **202***a-c* in a wavelength range that can be detected by detectors **232***a-c* included in the receive block **230**. The wavelength range could, for example, be in the ultraviolet, visible, and/or infrared portions of the electromagnetic spectrum. In some examples, the wavelength range can be a narrow wavelength range, such as provided by lasers. In one embodiment, the wavelength range includes a source wavelength of 905 nm. Additionally, the light sources **222***a-c* can be configured to emit the emitted light beams **202***a-c* in the form of pulses. In some examples, the plurality of light sources **222***a-c* can be disposed on one or more substrates (e.g., printed circuit boards (PCB), flexible PCBs, etc.) and arranged to emit the plurality of light beams **202***a-c* towards the exit aperture **226**.

Although FIG. **2**B shows that the curved focal surface **228** is curved in the x-y plane, additionally or alternatively, the plurality of light sources **222***a-c* may be arranged along a focal surface that is curved in a vertical plane. For example, the curved focal surface **228** can have a curvature in a vertical plane, and the plurality of light sources **222***a-c* can include additional light sources arranged vertically along the curved focal surface **228** and configured to emit light beams directed at the mirror **224** and reflected through the exit aperture **226**. In this example, the detectors **232***a-c* may also include additional detectors that correspond to additional light sources of the light sources **222***a-c*. Further, in some examples, the light sources **222***a-c* may include additional light sources arranged horizontally along the curved focal surface **228**. In one embodiment, the light sources **222***a-c* may include 64 light sources that emit light having a wavelength of 905 nm. For instance, the 64 light sources may be arranged in four columns, each comprising 16 light sources, along the curved focal surface **228**. In this instance, the detectors **232***a-c* may include 64 detectors that are arranged similarly (e.g., 4 columns comprising 16 detectors each, etc.) along curved focal surface **238**. In other embodiments, the light sources **222***a-c* and the detectors **232***a-c* may include additional or fewer light sources and/or detectors than those shown in FIG. **2**B.

Due to the arrangement of the plurality of light sources **222***a-c* along the curved focal surface **228**, the plurality of light beams **202***a-c*, in some examples, may converge towards the exit aperture **226**. Thus, in these examples, the exit aperture **226** may be minimally sized while being capable of accommodating vertical and horizontal extents of the plurality of light beams **202***a-c*. Additionally, in some examples, the curved focal surface **228** can be defined by the lens **250**. For example, the curved focal surface **228** may correspond to a focal surface of the lens **250** due to shape and composition of the lens **250**. In this example, the plurality of light sources **222***a-c* can be arranged along the focal surface defined by the lens **250** at the transmit block.

The plurality of light beams **202***a-c* propagate in a transmit path that extends through the transmit block **220**, the exit aperture **226**, and the shared space **240** towards the lens **250**. The lens **250** collimates the plurality of light beams **202***a-c* to provide collimated light beams **204***a-c* into an environment of the LIDAR device **200**. The collimated light beams **204***a-c* correspond, respectively, to the plurality of light beams **202***a-c*. In some examples, the collimated light beams **204***a-c* reflect off one or more objects in the environment of the LIDAR device **200** as reflected light **206**. The reflected light **206** may be focused by the lens **250** into the shared space **240** as focused light **208** traveling along a receive path that extends through the shared space **240** onto the receive block **230**. For example, the focused light **208** may be reflected by the reflective surface **242** as focused light **208***a-c* propagating towards the receive block **230**.

The lens **250** may be capable of both collimating the plurality of light beams **202***a-c* and focusing the reflected light **206** along the receive path **208** towards the receive block **230** due to the shape and composition of the lens **250**. For example, the lens **250** can have an aspheric surface **252** facing outside of the housing **210** and a toroidal surface **254** facing the shared space **240**. By using the same lens **250** to perform both of these functions, instead of a transmit lens for collimating and a receive lens for focusing, advantages with respect to size, cost, and/or complexity can be provided.

The exit aperture **226** is included in a wall **244** that separates the transmit block **220** from the shared space **240**. In some examples, the wall **244** can be formed from a transparent material (e.g., glass) that is coated with a reflective material **242**. In this example, the exit aperture **226** may correspond to the portion of the wall **244** that is not coated by the reflective material **242**. Additionally or alternatively, the exit aperture **226** may comprise a hole or cut-away in the wall **244**.

The focused light **208** is reflected by the reflective surface **242** and directed towards an entrance aperture **234** of the receive block **230**. In some examples, the entrance aperture **234** may comprise a filtering window configured to allow wavelengths in the wavelength range of the plurality of light beams **202***a-c* (e.g., source wavelength) emitted by the plurality of light sources **222***a-c* and attenuate other wavelengths. In some examples, the entrance aperture **234** may comprise a half-mirror configured to reflect a portion of the focused light **208***a-c* and allow another portion of the focused light **208***a-c* to propagate toward the detectors **232***a-c*. The focused light **208***a-c* reflected by the reflective surface **242** from the focused light **208***a-c* propagates, respectively, onto a plurality of detectors **232***a-c*.

The plurality of detectors **232***a-c* can be arranged along a curved focal surface **238** of the receive block **230**. Although FIG. **2**B shows that the curved focal surface **238** is curved along the x-y plane (horizontal plane), additionally or alternatively, the curved focal surface **238** can be curved in a vertical plane. The curvature of the focal surface **238** is also defined by the lens **250**. For example, the curved focal surface **238** may correspond to a focal surface of the light projected by the lens **250** along the receive path at the receive block **230**.

The detectors **232***a-c* may comprise photodiodes, avalanche photodiodes, phototransistors, cameras, active pixel sensors (APS), charge coupled devices (CCD), cryogenic detectors, or any other sensor of light configured to receive

focused light **208***a-c* having wavelengths in the wavelength range of the emitted light beams **202***a-c* (e.g., the source wavelength).

Each of the focused light **208***a-c* corresponds, respectively, to the emitted light beams **202***a-c* and is directed onto, respectively, the plurality of detectors **232***a-c*. For example, the detector **232***a* is configured and arranged to received focused light **208***a* that corresponds to collimated light beam **204***a* reflected of the one or more objects in the environment of the LIDAR device **200**. In this example, the collimated light beam **204***a* corresponds to the light beam **202***a* emitted by the light source **222***a*. Thus, the detector **232***a* receives light that was emitted by the light source **222***a*, the detector **232***b* receives light that was emitted by the light source **222***b*, and the detector **232***c* receives light that was emitted by the light source **222***c*.

By comparing the received light **208***a-c* with the emitted light beams **202***a-c*, at least one aspect of the one or more object in the environment of the LIDAR device **200** may be determined. For example, by comparing a time when the plurality of light beams **202***a-c* were emitted by the plurality of light sources **222***a-c* and a time when the plurality of detectors **232***a-c* received the focused light **208***a-c*, a distance between the LIDAR device **200** and the one or more object in the environment of the LIDAR device **200** may be determined. In some examples, other aspects such as shape, color, material, etc. may also be determined.

In some examples, the LIDAR device **200** may be rotated about an axis to determine a three-dimensional map of the surroundings of the LIDAR device **200**. For example, the LIDAR device **200** may be rotated about a substantially vertical axis as illustrated by arrow **290**. Although illustrated that the LIDAR device **200** is rotated counter clock-wise about the axis as illustrated by the arrow **290**, additionally or alternatively, the LIDAR device **200** may be rotated in the clockwise direction. In some examples, the LIDAR device **200** may be rotated 360 degrees about the axis. In other examples, the LIDAR device **200** may be rotated back and forth along a portion of the 360 degree view of the LIDAR device **200**. For example, the LIDAR device **200** may be mounted on a platform that wobbles back and forth about the axis without making a complete rotation.

Thus, the arrangement of the light sources **222***a-c* and the detectors **232***a-c* may allow the LIDAR device **200** to have a particular vertical field-of-view. In one example, the vertical FOV of the LIDAR device **200** is 20°. Additionally, the rotation of the LIDAR device **200** allows the LIDAR device **200** to have a 360° horizontal FOV. Further, the rate of rotation may allow the device to have a particular refresh rate. In one example, the refresh rate is 10 Hz. The refresh rate along with the arrangement of the light sources **222***a-c* and the detectors **232***a-c* may also allow the LIDAR device **300** to have a particular angular resolution. In one example, the angular resolution is 0.2°×0.3°. However, the various parameters such as the refresh rate and the angular resolution may vary according to the configuration of the LIDAR device **200**. Further, in some examples, the LIDAR device **200** may include additional, fewer, or different components than those shown in FIGS. **2**A-**2**B.

FIG. **2**C is a perspective view of the LIDAR device **200** shown in FIG. **2**A with various components removed to illustrate an interior of the LIDAR device **200**. As shown, the various components of the LIDAR device **200** can be removably mounted to the housing **210**. For example, the transmit block **220** may comprise one or more printed circuit boards (PCBs) that are fitted in the portion of the housing **210** where the transmit block **220** can be mounted. Although FIG. **2**C shows the transmit block **220** with one PCB, in some embodiments, the transmit block **320** may include multiple PCBs (not shown) that each include some of the plurality of light sources **232***a-c*. In one embodiment, each PCB in the transmit block may include 16 light sources, and the transmit block **220** may include four PCBs. Thus, in this embodiment, the LIDAR device **200** may include 64 light sources. Other embodiments are possible as well where the transmit block **220** includes a different number of light sources. Additionally, the receive block **230** may comprise a plurality of detectors (e.g., detectors **232***a-c*, etc.) mounted to a flexible substrate and can be removably mounted to the housing **210** as a block that includes the plurality of detectors. Similarly, the lens **250** can be mounted to another side of the housing **210**.

FIG. **3** illustrates a transmit block **320**, according to an example embodiment. Transmit block **320** may be similar to the transmit blocks **120** and/or **220** described in FIGS. **1**-**2**. For example, the transmit block **320** includes a plurality of light sources **322***a-c* similar to the plurality of light sources **222***a-c* included in the transmit block **220** of FIGS. **2**A-**2**C. Additionally, the light sources **322***a-c* are arranged along a focal surface **328**, which is curved in a vertical plane. The light sources **322***a-c* are configured to emit a plurality of light beams **302***a-c* that converge and propagate through an exit aperture **326** in a wall **344**.

Although the plurality of light sources **322***a-c* can be arranged along a focal surface **328** that is curved in a vertical plane, additionally or alternatively, the plurality of light sources **322***a-c* can be arranged along a focal surface that is curved in a horizontal plane or a focal surface that is curved both vertically and horizontally. For example, the plurality of light sources **322***a-c* can be arranged in a curved three dimensional grid pattern. For example, the transmit block **320** may comprise a plurality of printed circuit boards (PCBs) vertically mounted such that a column of light sources such as the plurality of light sources **322***a-c* are along the vertical axis of each PCB and each of the plurality of PCBs can be arranged adjacent to other vertically mounted PCBs along a horizontally curved plane to provide the three dimensional grid pattern. Alternatively, in some examples, the light sources **322***a-c* may be arranged along any other surface such as a linear surface. Further, although the transmit block **320** is shown to include multiple light sources **322***a-c*, in some examples, the transmit block **320** may include only one light source or a different number of light sources than those shown in FIG. **3**.

As shown in FIG. **3**, the light beams **302***a-c* converge towards the exit aperture **326** which allows the size of the exit aperture **326** to be minimized while accommodating vertical and horizontal extents of the light beams **302***a-c* similarly to the exit aperture **226** described in FIG. **2**B.

The light emitted by the light sources **222***a-c* may be partially collimated to fit through the exit aperture **224**. FIGS. **4**A, **4**B, and **4**C illustrate an example of how such partial collimation could be achieved. In this example, a light source **400** is made up of a laser diode **402** and a cylindrical lens **404**. As shown in FIG. **4**A, laser diode **402** has an aperture **406** with a shorter dimension corresponding to a fast axis **408** and a longer dimension corresponding to a slow axis **410**. FIGS. **4**B and **4**C show an uncollimated laser beam **412** being emitted from laser diode **402**. Laser beam **412** diverges in two directions, one direction defined by fast axis **408** and another, generally orthogonal direction defined by slow axis **410**. FIG. **4**B shows the divergence of laser beam **412** along fast axis **408**, whereas FIG. **4**C shows

the divergence of laser beam **412** along slow axis **410**. Laser beam **412** diverges more quickly along fast axis **408** than along slow axis **410**.

In one specific example, laser diode **402** is an Osram SPL DL90_3 nanostack pulsed laser diode that emits pulses of light with a range of wavelengths from about 896 nm to about 910 nm (a nominal wavelength of 905 nm). In this specific example, the aperture has a shorter dimension of about 10 microns, corresponding to its fast axis, and a longer dimension of about 200 microns, corresponding to its slow axis. The divergence of the laser beam in this specific example is about 25 degrees along the fast axis and about 11 degrees along the slow axis. It is to be understood that this specific example is illustrative only. Laser diode **402** could have a different configuration, different aperture sizes, different beam divergences, and/or emit different wavelengths.

As shown in FIGS. **4**B and **4**C, cylindrical lens **404** may be positioned in front of aperture **406** with its cylinder axis **414** generally parallel to slow axis **410** and perpendicular to fast axis **408**. In this arrangement, cylindrical lens **404** can pre-collimate laser beam **412** along fast axis **408**, resulting in partially collimated laser beam **416**. In some examples, this pre-collimation may reduce the divergence along fast axis **408** to about one degree or less. Nonetheless, laser beam **416** is only partially collimated because the divergence along slow axis **410** may be largely unchanged by cylindrical lens **404**. Thus, whereas uncollimated laser beam **412** emitted by laser diode has a higher divergence along fast axis **408** than along slow axis **410**, partially collimated laser beam **416** provided by cylindrical lens **404** may have a higher divergence along slow axis **410** than along fast axis **408**. Further, the divergences along slow axis **410** in uncollimated laser beam **412** and in partially collimated laser beam **416** may be substantially equal.

In one example, cylindrical lens **404** is a microrod lens with a diameter of about 600 microns that is placed about 250 microns in front of aperture **406**. The material of the microrod lens could be, for example, fused silica or a borosilicate crown glass, such as Schott BK7. Cylindrical lens **404** could also be used to provide magnification along fast axis **408**. For example, if the dimensions of aperture **406** are 10 microns by 200 microns, as previously described, and cylindrical lens **404** is a microrod lens as described above, then cylindrical lens **404** may magnify the shorter dimension (corresponding to fast axis **408**) by about 20 times. This magnification effectively stretches out the shorter dimension of aperture **406** to about the same as the longer dimension. As a result, when light from laser beam **416** is focused, for example, onto a detector, the focused spot could have a substantially square shape instead of the rectangular slit shape of aperture **406**.

FIG. **5**A illustrates a receive block **530**, according to an example embodiment. FIG. **5**B illustrates a side view of three detectors **532***a-c* included in the receive block **530** of FIG. **5**A. Receive block **530** may be similar to the receive block **130** of FIG. **1** and/or the receive block **230** of FIGS. **2**B-**2**C. For example, the receive block **530** includes a plurality of detectors **532***a-c* arranged along a curved surface **538** defined by a lens **550** similarly to the receive block **230**, the detectors **232***a-c*, and the curved plane **238** described in FIG. **2**B. Focused light **508***a-c* from lens **550** propagates along a receive path that includes a reflective surface **542** onto the detectors **532***a-c* similar, respectively, to the focused light **208***a-c*, the lens **250**, the reflective surface **242**, and the detectors **232***a-c* described in FIG. **2**B.

The receive block **530** comprises a flexible substrate **580** on which the plurality of detectors **532***a-c* are arranged along the curved surface **538**. The flexible substrate **580** conforms to the curved surface **538** by being mounted to a receive block housing **590** having the curved surface **538**. As illustrated in FIG. **5**B, the curved surface **538** includes the arrangement of the detectors **532***a-c* curved along a vertical and horizontal axis of the receive block **530**.

In some embodiments, the number and arrangement of the detectors **532***a-c* may be different than those shown in FIGS. **5**A-**5**B. For instance, the detectors **532***a-c* may be alternatively arranged along a linear surface, or may alternatively only include one detector, among other possibilities.

As noted above in the description of FIG. **1**, the system **100** may be used with various LIDAR devices having various configurations, such as the LIDAR device **200** of FIGS. **2**A-**2**C. FIG. **6**A illustrates another LIDAR device **600** that may be used with the system **100**, according to an example embodiment.

As shown, the LIDAR device **600** includes an optics assembly **610**, a transmit lens **652**, a receive lens **654**, a mirror **620**, a pin **622**, and a motor **670**. For purposes of illustration, FIG. **6**A shows an x-y-z axis, in which the z-axis is pointing out of the page, and the x-axis and y-axis define a horizontal plane along the surface of the page.

In some examples, the LIDAR device **600** may emit light that propagates away from the mirror **660** along a viewing direction of the LIDAR device **600** (e.g., parallel to z-axis shown in FIG. **6**A, etc.) toward an environment of the LIDAR device **600**, and may receive reflected light from one or more objects in the environment.

Accordingly, the optics assembly **610** may be configured to emit light pulses towards the mirror **660** that are then reflected by the mirror **660** towards the environment. Further, the optics assembly **610** may be configured to receive reflected light that is reflected off the mirror **660**. In one embodiment, the optics assembly **610** may include a single laser emitter that is configured to provide a narrow beam having a wavelength of 905 nm. In other embodiments, the optics assembly **610** may include multiple light sources similarly to the LIDAR device **200** of FIGS. **2**A-**2**C. As shown, the optics assembly **610** includes the transmit lens **652** for collimation and/or focusing of emitted light from the optics assembly **610** onto the mirror **620**, and a receive lens **654** for focusing reflected light from the mirror **660** onto one or more detectors (not shown) of the optics assembly **610**. However, in some examples, the optics assembly **610** may alternatively include a single lens for both collimation of emitted light and focusing of reflected light similarly to the lens **250** of the LIDAR device **200**.

As shown, the mirror **660** may be arranged to steer emitted light from the transmit lens **652** towards the viewing direction of the LIDAR device **600**. Further, for example, the mirror **660** may be arranged to steer reflected light from the mirror **660** towards the receive lens **654**. In some examples, the mirror **6690** may be a triangular mirror that performs complete rotations about an axis defined by the pin **662**. In one embodiment, the vertical FOV of the LIDAR device **600** is 110°.

The pin **662** may be configured to mount the mirror **660** to the LIDAR device **600**. In turn, the pin **662** can be formed from any material capable of supporting the mirror **660**. For example, the pin **662** may be formed from a solid material such as plastic or metal among other possibilities. In some examples, the LIDAR device **600** may be configured to rotate the mirror **660** about the pin **662** for complete rotations to steer emitted light from the optics assembly **610** vertically. In other examples, the LIDAR device **600** may be configured to rotate the mirror **660** about the pin **662** over a

given range of angles to steer the emitted light. Thus, in some examples, various vertical FOVs are possible by adjusting the rotation the mirror **660** about the pin **662**.

The motor **670** may include any motor such as a stepper motor, an electric motor, a combustion motor, a pancake motor, and/or a piezoelectric actuator among other possibilities. In some examples, the motor **670** may be configured to rotate various components of the LIDAR device **600** (e.g., optics assembly **610**, mirror **660**, pin **662**, etc.) about an axis of the LIDAR device **600**. For example, the axis may be substantially vertical similarly to the y-axis shown in FIG. **6**A. By rotating the various components of the LIDAR device **600** about the axis, in some examples, the motor **670** may steer the emitted light that is reflected off the mirror **660** horizontally, thus allowing the LIDAR device **600** to have a horizontal FOV. In one embodiment, the motor **670** may rotate for a defined amount of rotation such as 270°. In this embodiment, the LIDAR device **600** may thus have a horizontal FOV of 270. However, other amounts of rotation are possible as well (e.g., 360°, 8°, etc.) thereby allowing a different horizontal FOV for the LIDAR device **600**. Thus, in some examples, the LIDAR device **600** may provide an alternative device for scanning the environment or a portion thereof to the LIDAR device **104** of FIG. **1**, and/or the LIDAR device **200** of FIGS. **2**A-**2**C.

FIG. **6**B illustrates a partial cross-section view of the LIDAR device **600** shown in FIG. **6**A. It is noted that some of the components of the LIDAR device **600** are omitted from the illustration of FIG. **6**B for convenience in description.

As shown, the optics assembly **610** comprises a transmit block **620** that includes one light source **622**. In some examples, the transmit block **620** may alternatively include more than one light source similarly to the transmit block **220** of the LIDAR device **200**. However, for the sake of example, the transmit block **620** includes one light source **622**. The light source **622** may be configured to emit one or more light pulses (e.g., laser beams, etc.) towards the transmit lens **652**. For example, as shown, emitted light **602***a* propagates away from the light source **622** towards the transmit lens **652**. In some examples, the light source **622** may be similar to the light sources **222***a-c* of the LIDAR device **200** of FIGS. **2**A-**2**C. In one embodiment, the light source **622** may be configured to emit light pulses having a wavelength of 905 nm. In other embodiments, the light source **622** may be configured to emit light having any other wavelength.

In line with the discussion above, the transmit lens **652** may be configured to collimate the emitted light **602***a* into one or more collimated light beams **602***b* and/or may be configured to focus the emitted light **602***a* as the focused light **602***b* onto the mirror **660**.

As shown, the mirror **660** may be a triangular mirror that has three reflective surfaces **660***a*, **660***b*, **660***c*. However, in other examples, the mirror **660** may alternatively include a greater or fewer number of reflective surfaces. As shown, the collimated light **602***b* may then reflect off the reflective surface **602***a* and into the environment of the LIDAR **600** as emitted light **602***c*. For example, a direction of the emitted light **602***c* is illustrated by arrow **604**. In practice, as the mirror **660** is rotated about an axis defined by the pin **662**, the emitted light **602***c* may be steered to have a different direction than that illustrated by arrow **604**. For example, the direction **604** of the emitted light **602***c* may instead correspond to a different direction along arrow **606**. Thus, by rotating the mirror **660** about the pin **662**, the LIDAR device **600** may be configured to have a vertical FOV, for example.

Consider by way of example a scenario where the mirror **660** is configured to rotate about an axis defined by the pin **662** continuously in a clock-wise direction. In this scenario, the direction **604** of the emitted light **602***c* may thereby be adjusted also in a clock-wise direction as illustrated by the arrow **606** until the focused light **602***b* is reflecting off an edge of the reflective surface **660***a*. At this point, the emitted light **602***c* would be directed towards a maximum extent of the vertical FOV of the LIDAR device **600**. Continuing with the scenario, as the mirror **660** continues to rotate, the collimated light **602***b* may then be focused onto the reflective surface **660***b* instead of the reflective surface **660***a*. At this point, the reflected light **602***c* may be steered to a direction that is towards a minimum extent of the vertical FOV of the LIDAR device **600**. Continuing with the scenario, as the mirror **660** continues to rotate, the direction of the emitted light **602***c* may then be adjusted in a clock-wise direction towards the maximum extent of the vertical FOV that corresponds to the light **602***b* being focused onto another edge of the reflective surface **660***b*. Similarly, continuing with the scenario, the direction of the emitted light **602***c* may then be adjusted to scan the vertical FOV of the LIDAR device **600** by reflecting the light **602***b* off the reflective surface **660***c* instead of the reflective surface **660***b*. Through this process, for example, the LIDAR device **600** may continuously scan the vertical FOV. As a variation of the scenario above by way of example, the mirror **660** may be alternatively configured to rotate within a given range of angles (e.g., wobble, etc.) to define a narrower vertical field-of-view than that of the scenario described above. Other configurations for rotation of the mirror **660** are possible as well.

FIG. **6**C illustrates a partial cross-section view of the optics assembly **610** in the LIDAR device **600** of FIG. **6**A. For purposes of illustration, FIG. **6**C shows an x-y-z axis, in which the z-axis is pointing out of the page, and the x-axis and y-axis define a horizontal plane along the surface of the page.

As shown, the optical assembly **610** comprises transmit block **620** that includes one light source **622**. The light source **622** may be similar to the light sources **222***a-c* of the LIDAR device **200**. In line with the discussion above, in some examples, the transmit block **620** may alternatively include more than one light source. The light source **622** is configured to emit light **602***a* toward the transmit lens **652**. Further, the optical assembly **610** comprises receive block **630** that includes one detector **632**. The detector **632** may be similar to the detectors **232***a-c* of the LIDAR device **200**. Again, in some examples, the receive block **630** may alternatively include more than one detector. The detector **632** may be configured to receive light **608** focused by the receive lens **654**.

As shown, the optics assembly **610** also includes an optical shield **612**. The optical shield **612** may be configured to provide optical shielding between the transmit block **620** and the receive block **630**, at least for the light having the source wavelength of the emitted light **602***a*. In turn, the optical shield **612** may mitigate interference with light **608** detected by the detector **632** of the receive block **630**. The optical shield **612** may be formed, for example, as a wall coated by a metal, metallic ink, or metallic foam to provide the shielding. Example metals may include copper or nickel. Other configurations and/or materials are possible as well for the optical shield **612**.

As noted in the description of the system **100** of FIG. **1**, in some examples, the present method allows alignment of the detector **632** with light originating at the light source

622. By way of example, an alignment apparatus (e.g., apparatus **160**) may couple to the transmit block **620** and/or the receive block **630**, and may then adjust the relative position between the transmit block **620** and the receive block **630** to perform the alignment.

The optical components (i.e., the transmit block **620** and the receive block **630**) of the optical assembly **610** may each have six degrees of freedom (DOF). Three of the six DOF are translational: forward/backward (e.g., linearly along an axis of the optical component that is parallel to the y-axis shown in FIG. **6**C), up/down (e.g., linearly along an axis of the optical component that is parallel to the z-axis), and left/right (e.g., linearly along an axis of the optical component that is parallel to the x-axis). Further, three of the six DOF are rotational: pitch (e.g., rotation about the axis of the optical component that is parallel to the x-axis), yaw (e.g., rotation about the axis of the optical component that is parallel to the z-axis), and roll (e.g., rotation about the axis of the optical component that is parallel to the y-axis). In accordance with the present disclosure, the alignment apparatus (not shown) may adjust the relative position between the transmit block **620** and the receive block **630** shown in FIG. **6**C by adjusting some or all of the six DOF described above for one or both of the transmit block **620** and the receive block **630**.

In line with the discussion above, systems and methods herein allow optics alignment for LIDAR devices having various different configurations. Thus, the configurations of the LIDAR devices **200** and **600** are presented for exemplary purposes only. Other configurations and LIDAR devices are possible as well for the systems and methods herein.

FIG. **7**A illustrates a system **700**, according to an example embodiment. The system **700** may be similar to the system **100** of FIG. **1**. For example, as shown, the system **700** includes a mounting platform **702**, a LIDAR device **704**, a camera **706**, a light filter **708**, and an alignment apparatus **760** that can be similar, respectively, to the mounting platform **102**, the LIDAR device **104**, the camera **106**, the light filter **108**, and the alignment apparatus **160** of the system **100**. As shown, the system **700** also includes a mounting structure **710**, an actuator **712**, and a manipulator **762**.

The mounting structure **710** may be formed from any solid material (e.g., metal, plastic, etc.) similarly to the mounting platform **702**, and may be shaped to facilitate coupling one or more of the components of the system **700** to the mounting platform **702**. As shown, for example, the mounting structure **710** couples the camera **706** and the light filter **708** to the mounting platform **702**. However, in some examples, a separate mounting structure may be utilized for each of the camera **706** and the light filter **708**.

The actuator **712** may be configured to adjust a position of the light filter **708**. Example actuators may include motors, stepper motors, pneumatic actuators, hydraulic pistons, relays, solenoids, and piezoelectric actuators among other possibilities.

The manipulator **762** may include any structure configured to couple the alignment apparatus **702** with one or more components of the LIDAR device **704**. In line with the discussion above, the system **700** may adjust a relative position between a transmit block (not shown) and a receive block (not shown) of the LIDAR device **704**. For instance, the alignment apparatus **760** (e.g., robotic arm, etc.) may adjust the relative position between the transmit block and the receive block by adjusting the position of the manipulator **762** or changing the orientation of the manipulator **762**, among other possibilities.

As shown, the mounting platform **702** includes a plurality of holes, exemplified by holes **702***a* and **702***b*. In some embodiments, the various components such as the LIDAR device **704**, the camera **706**, and/or the light filter **708** may be mounted to the mounting platform by coupling the various components to such holes in the mounting platform (e.g., by fastening a bolt through the holes). In other embodiments, the various components may be mounted to the mounting platform **702** via other processes or devices. In one example, the various components may be mounted to the mounting platform **702** via an application of an adhesive among other possibilities. In another example, a mounting structure may couple one or more of the components to the mounting platform **702**. For instance, as shown in FIG. **7**A, the mounting structure **710** may be coupled to the mounting platform **702** (e.g., by fastening a bolt to one of the holes, etc.), and may also be coupled the camera **706** and the light filter **708** to provide the particular positions of the camera **706** and the light filter **708** relative to the mounting platform **702**. Other configurations and shapes of the mounting structure **710** are possible as well.

Further, as shown, the LIDAR device **704** has a configuration similar to the LIDAR device **200** of FIGS. **2**A-**2**C. However, in some examples, other configurations are possible for the LIDAR device **704**, such as the configuration of the LIDAR device **600** of FIGS. **6**A-**6**C among other possibilities.

An example scenario for operation of the system **700** is as follows. First, as shown, the LIDAR device **704** may be mounted to the mounting platform **702** to have a field-of-view (FOV) through which light emitted by a transmit block (not shown) of the LIDAR device **704** and light received by a receive block (not shown) of the LIDAR device **704** propagates. For instance, the LIDAR device **704** may be mounted to the mounting platform **702** using the alignment apparatus **760** (e.g., robotic arm, etc.) or any other device (e.g., mechanical tool, etc.). Next, the camera **706** may be located at a given position relative to the LIDAR device **704** such that the camera **706** may obtain images of the receive block (not shown) of the LIDAR device **704** and/or light emitted by the transmit block (not shown) of the LIDAR device **704**.

Continuing with the scenario, the camera **706** may then be focused to infinity for the source wavelength (e.g., 905 nm) of the light emitted by the LIDAR device **704**. Next, the light filter **708** may be positioned at a first position to be interposed between the LIDAR device **704** and the camera **706** along the FOV of the LIDAR device **704**. For instance, the actuator **712** may be configured to move the light filter **708** to the first position shown in FIG. **7**A.

Continuing with the scenario, the system **700** may then cause the transmit block (not shown) of the LIDAR device **704** to emit one or more light beams through the light filter **708** and toward the camera **706**. Referring back to FIG. **2**B by way of example, the light beams may correspond to the light beams **204***a-c* propagating out of the lens **250**. Next, the camera **706** may obtain a first image of the light beams emitted by the LIDAR device **704**. Continuing with the example of FIG. **2**B, the first image may indicate light source positions of light sources **222***a-c* in the LIDAR device **200**. At this point in the scenario, the system may then cause the LIDAR device **704** to stop emitting the light beams.

Continuing with the scenario, the system may then cause the actuator **712** to move the light filter **708** to a second position where the light filter **708** is not interposed between the camera **706** and the LIDAR **704**. FIG. **7**B illustrates the

light filter **708** at the second position described above. In turn, the camera **706** may obtain a second image. The second image may indicate detector positions of detectors in a receive block (not shown) of the LIDAR device **704**. Referring back to FIG. **2**B by way of example, the second image may represent the detector positions of detectors **232***a-c* that are viewable to the camera **706** via mirror **242** and lens **250**.

Continuing with the scenario, the system **700** may then determine at least one offset based on the first image and the second image. In one instance, the at least one offset may include distances between adjacent light sources and/or adjacent detectors of the LIDAR device **704**. In another instance, the at least one offset may include distances between light beams emitted by light sources in the LIDAR device **704** and corresponding detectors of the LIDAR device **704**. Other offsets are possible as well and are described in greater detail within exemplary embodiments herein.

In line with the discussion above, the alignment apparatus **760** (e.g., robotic arm, etc.) may couple to the transmit block (not shown) and/or the receive block (not shown) of the LIDAR device **704** via the manipulator **762**. Thus, in the scenario, the alignment apparatus **760** may then adjust the relative position between the transmit block and the receive block in accordance with the determined at least one or more offset.

FIG. **7**C illustrates a partial view of the system **700** shown in FIGS. **7**A-**7**B. It is noted that some of the components of the system **700** are omitted from the illustration of FIG. **7**C for convenience in description. For purposes of illustration, FIG. **7**C shows an x-y-z axis, in which the z-axis is pointing out of the page, and the x-axis and y-axis define a horizontal plane along the surface of the page.

As shown in FIG. **7**C, the manipulator **762** includes protrusions **762***a-d* that may be configured to couple with receive block **730**. The receive block **730** may be included in the LIDAR device **704** shown in FIGS. **7**A-**7**B. It is noted that other components of the LIDAR device **704** (e.g., transmit block, etc.) are omitted from the illustration of FIG. **7**C for convenience in description. The receive block **730** may be similar to the receive block **230** of the system **200**. However, in some embodiments, the receive block **730** may take any other form such as the configuration of the receive block **630** among other possibilities.

Similarly to the description of the receive block **630** of FIG. **6**C, the receive block **730** has six degrees of freedom (DOF). Three of the six DOF are translational: forward/backward (e.g., linearly along an axis of the receive block **730** that is parallel to the z-axis shown in FIG. **7**C), up/down (e.g., linearly along an axis of the receive block **730** that is parallel to the y-axis), and left/right (e.g., linearly along an axis of the receive block **730** that is parallel to the x-axis). Further, three of the six DOF are rotational: pitch (e.g., rotation about the axis of the receive block **730** that is parallel to the x-axis), yaw (e.g., rotation about the axis of the optical component that is parallel to the y-axis), and roll (e.g., rotation about the axis of the optical component that is parallel to the z-axis).

Continuing with the scenario, the system **700** may adjust the position of the receive block **730**, when coupled to the manipulator **762**, by adjusting the forward/backward position, the up/down position, the left/right position, the pitch, the yaw, and/or the roll of the receive block **730** in line with the discussion above. In turn, the system **700** may adjust the relative position between the transmit block (not shown) of the LIDAR **704** and the receive block **730**. In some embodiments, additionally or alternatively to the adjustments to the position/orientation of the receive block **730**, the manipulator **762** may adjust the position/orientation of the transmit block (not shown) of the LIDAR device **704** in a similar manner. Through this process, for example, the system **700** may align one or more light sources of the LIDAR device **704** with one or more detectors of the LIDAR device **704**.

In some embodiments, the system **700** may then decouple the manipulator **762** from the receive block **730** (or the transmit block), and the receive block **730** may be configured to remain at the alignment (e.g., relative position) performed by the alignment apparatus **760**. By way of example, the system **700** may apply an epoxy or other adhesive to a periphery of the receive block **730** to maintain the receive block **730** at the aligned relative position to the transmit block of the LIDAR device **704**. In one instance, the manipulator **762** may remain coupled to the receive block **730** until the adhesive is cured. However, other processes are possible as well for maintaining the relative position between the transmit block and the receive block **730** of the LIDAR device **704**. For instance, the receive block **730** may be fastened to a housing of the LIDAR device **704** using bolts, screws, or any other device among other possibilities.

It is noted that the scenario presented above is for exemplary purposes only. Other scenarios are possible as well that may include some or all of the components of the system **700**, or may include other processes than those described. A non-exhaustive list of example variations of the scenario is presented below.

In a first example, the system **700** may not include the light filter **708**. For instance, the camera **706** may be configured to obtain the first image and the second image without the light filter **708** being interposed between the camera **706** and the LIDAR device **704**.

In a second example, the camera **706** and the light filter **708** may be mounted separately from the LIDAR device **704**. For instance, the system **700** may be implemented in an assembly line where multiple LIDAR devices such as the LIDAR device **704** are located on an assembly belt. In this instance, the camera **706**, the light filter **708** and the robotic arm **760** may be mounted independently adjacent to the assembly belt, and may perform similar functions to the scenario described above to calibrate each LIDAR device in the assembly line.

In a third example, the receive block **730** may be illuminated by an auxiliary light source (not shown) similar to the auxiliary light source **170**. For instance, the light filter **708** may remain interposed between the LIDAR device **704** and the camera **706** while the first image of the laser beams emitted by the LIDAR device **704** is captured by the camera **706**, and while the second image of the receive block **730** is captured as well. In this instance, the receive block **730** would be visible to the camera **706** through the light filter **708** due to the illumination by the auxiliary light source with light at the source wavelength that is viewable through the light filter **708**.

In a fourth example, the LIDAR device **704** may be configured to continue emitting light while the camera **106** captures the first image and the second image. For instance, the light filter **708** may alternatively attenuate the light beams having the source wavelength emitted by light sources of the LIDAR device **704**. Thus, in this instance, the light filter **708** may be positioned as shown in FIG. **7**B while the camera **706** is capturing the first image indicative of the light source positions. Further, in this instance, the light filter **708** may be positioned as shown in FIG. **7**A while the camera **706** is capturing the second image indicative of the detector positions. Thus, various configurations of the light

filter **708** may therefore affect the operation of the system **700** in line with the discussion above.

In a fifth example, the camera **706** may be configured to capture a single image instead of the first image and the second image. The single image may be indicative of both the light source positions of light sources in the LIDAR device **704**, and the detector positions of detectors in the receive block **730**. Referring back to FIG. **2**B by way of example, the single image may capture both the light beams **204***a-c* and light reflected off the detectors **232***a-c*. As in the third example above, the receive block **730** in this example may be illuminated by an auxiliary light source such that the detectors **232***a-c* are viewable through the light filter **708**. Other example scenarios are possible as well.

FIG. **8** illustrates another system **800**, according to an example embodiment. The system **800** may be similar to the systems **100** and **700**. For example, the system **800** includes a mounting platform **802**, a camera **806**, a light filter **808**, and an alignment apparatus **860** that are similar, respectively, to the mounting platform **702**, the camera **706**, the light filter **708**, and the alignment apparatus **760** of the system **700**. The system **800** also includes a LIDAR device **804** that is similar to the LIDAR device **104** of the system **100**. The system **800** also includes a manipulator **862** shaped and configured to couple the alignment apparatus **860** with one or more components of the LIDAR device **804**. The system **800** also includes an auxiliary light source **870** that is similar to the auxiliary light source **170** of the system **100**.

As shown, the LIDAR device **804** has a configuration similar to the LIDAR device **600** of FIGS. **6**A-**6**C. However, in some examples, other configurations are possible as well, such as the configuration of the LIDAR device **200** among other possibilities.

As shown, the light filter **808** is interposed between the LIDAR device **804** and the camera **806**. Additionally, the camera **806** is located at a given position at which the camera **806** can image light beam(s) emitted by the LIDAR device **804** and can image detector(s) (not shown) in the LIDAR device **804**. Referring back to FIG. **6**A by way of example, the camera **806** may be positioned to have a field-of-view facing the mirror **660** of the LIDAR device **600**.

However, as shown, the system **800** does not include an actuator (e.g., actuator **712** of system **700**) to move the light filter **808**. Instead, the system **800** includes the auxiliary light source **870** to illuminate a receive block (not shown) of the LIDAR device **804** with light having the source wavelength of light emitted by light source(s) (not shown) in the LIDAR device **804**. For instance, such illumination may allow detectors in the receive block of the LIDAR device **804** to be viewable by the camera **806** through the light filter **808**. Although the auxiliary light source **870** is shown to be mounted separately from other components of the system **800**, in some examples, the auxiliary light source **870** may be alternatively mounted to any of the components of the system **800**, such as the alignment apparatus **860**, the light filter **808**, the mounting platform **802**, etc. In one example, the auxiliary light source **870** may be alternatively mounted inside the LIDAR device **804**. Referring back to FIG. **6**C by way of example, the auxiliary light source may be alternatively mounted to a wall of the optics assembly **610**. Other configurations of the auxiliary light source **870** are possible as well.

As shown, the manipulator **862** has a different shape and structure than the manipulator **762** of the system **700**. Referring back to FIG. **6**C by way of example, the manipulator **862** may have any shape suitable for adjusting position/orientation of the transmit block **620** and/or the receive block **630**.

Thus, in some examples, the system **800** may perform similar functions as those described for the system **100** and the system **700**, but may include some variations suitable for other LIDAR device configurations, such as the configuration of the LIDAR device **804**.

FIG. **9** is a flowchart of a method **900**, according to an example embodiment. Method **900** shown in FIG. **9** presents an embodiment of a method that could be used with any of the systems **100**, **700**, **800**, the LIDAR devices **200**, **600**, the transmit block **320**, the light source **400**, and/or the receive block **530**, for example. Method **900** may include one or more operations, functions, or actions as illustrated by one or more of blocks **902**-**912**. Although the blocks are illustrated in a sequential order, these blocks may in some instances be performed in parallel, and/or in a different order than those described herein. Also, the various blocks may be combined into fewer blocks, divided into additional blocks, and/or removed based upon the desired implementation.

In addition, for the method **900** and other processes and methods disclosed herein, the flowchart shows functionality and operation of one possible implementation of present embodiments. In this regard, each block may represent a module, a segment, a portion of a manufacturing or operation process, or a portion of program code, which includes one or more instructions executable by a processor for implementing specific logical functions or steps in the process. The program code may be stored on any type of computer readable medium, for example, such as a storage device including a disk or hard drive. The computer readable medium may include non-transitory computer readable medium, for example, such as computer-readable media that stores data for short periods of time like register memory, processor cache and Random Access Memory (RAM). The computer readable medium may also include non-transitory media, such as secondary or persistent long term storage, like read only memory (ROM), optical or magnetic disks, compact-disc read only memory (CD-ROM), for example. The computer readable media may also be any other volatile or non-volatile storage systems. The computer readable medium may be considered a computer readable storage medium, for example, or a tangible storage device.

In addition, for the method **900** and other processes and methods disclosed herein, each block in FIG. **9** may represent circuitry that is wired to perform the specific logical functions in the process.

At block **902**, the method **900** involves mounting a transmit block and a receive block in a light detection and ranging (LIDAR) device to provide a relative position between the transmit block and the receive block. The transmit block may include one or more light sources configured to emit light at a source wavelength. The receive block may include one or more detectors configured to detect light at the source wavelength. In one embodiment, the source wavelength is 905 nm. In other embodiments, the source wavelength may be any other wavelength (e.g., infrared, ultraviolet, x-ray, visible, etc.).

By way of example, the transmit block and the receive block may be mounted by a robotic arm (e.g., alignment apparatuses **160**, **760**, **860**, etc.) into a housing (e.g., housing **210**, optics assembly **610**, etc.) to provide the relative position. In this example, the relative position may be similar to the relative position between transmit block **220** and receive block **230** of FIG. **2**B, or the relative position between transmit block **620** and receive block **630** of FIG.

6C, among other possibilities. However, in other examples, the mounting at block **902** may be performed by a device other than the alignment apparatus. For instance, the mounting at block **902** may correspond to an alignment (e.g., adjustment of the relative position) by a system performing the method **900** for a transmit block and a receive block that are already mounted in a LIDAR device.

In some examples, the LIDAR device may include a lens configured to (i) collimate light emitted from the one or more light sources and (ii) focus light onto the one or more detectors, similarly to the lens **250** of the LIDAR device **200**. In other examples, the LIDAR device may include a transmit lens for collimation of emitted light and a receive lens for focusing received light, similarly to the transmit lens **652** and the receive lens **654** of the LIDAR device **600**.

At block **904**, the method **900** involves locating a camera at a given position at which the camera, when focused at infinity, can image light beams emitted by the one or more light sources and can image the one or more detectors. By way of example, the given position may be similar to the position of the camera **706** of the system **700**. For instance, a field-of-view of the camera may be aligned with a FOV of the LIDAR device where light emitted from the one or more light sources propagates away from the LIDAR device.

At block **906**, the method **900** involves obtaining a first image indicative of light source positions of the one or more light sources. The first image, for example, may be obtained using the camera located at the given position and focused at infinity. Referring back to FIG. **2**B by way of example, the light source positions of the light sources **222***a-c* may vary according to the particular orientation and position of the transmit block **220**. In turn, the direction of propagation of the light beams **204***a-c* may also vary, and such variation may be represented by pixels in the first image obtained by the camera.

In some examples, the method **900** may also involve obtaining the first image while the one or more light sources are emitting light at the source wavelength. For instance, a system performing the method **900** may provide power and/or instructions to the LIDAR device to emit the light at the source wavelength, and may provide instructions to the camera to capture the first image while the one or more light sources are emitting the light. Further, in some instances, the system may provide instructions to the camera to adjust the focus to infinity for the source wavelength. Alternatively, for instance, the camera may be configured to have the focus prior to capturing the first image.

In some examples, the method **900** may also involve obtaining the first image while a light filter is interposed between the camera and the one or more light sources. The light filter may be similar to the light filters **108**, **708**, or **808**. In one example, the light filter may be configured to attenuate light having wavelengths other than the source wavelength. In this example, the first image may be more suitable for representing features of the emitted light beams at the source wavelength. In another example, the light filter may be configured to attenuate light within a wavelength range that includes the source wavelength. In this example, the light filter may reduce the intensity of the emitted light to protect components of the camera. Additionally or alternatively, in this example, the light filter may reduce an amount of light propagating toward the camera that has wavelengths proximal to the source wavelength. In turn, for instance, pixels in the first image representing the emitted light beams having the source wavelength may be easily contrasted from surrounding pixels having proximal wavelengths.

In some examples, the method **900** may also involve detecting a defect in a light source based on the first image. In one example, the first image may indicate that one or more of the light sources in the transmit block has a different intensity, brightness, color, or other characteristic compared to other light sources. For instance, a system performing method **900** may compare pixel properties (e.g., brightness, intensity, color, etc.) associated with one light source against other pixel properties in the first image associated with another light source. Alternatively, for instance, the system may compare the pixel properties of the light source with pre-determined pixel properties or pixel properties in a stored image among other possibilities.

In some examples, the method **900** may also involve detecting an aberration in an optical element optically coupled to a light source based on the first image. Referring back to FIGS. **4**A-**4**C by way of example, the light source may be coupled to an optical element such as the cylindrical lens **404**. In this example, the system performing the method **900** may detect the aberration in such optical element by examining the shape or other properties of pixels in the first image that are associated with a light beam from the light source (e.g., compare with other pixels, compare with stored parameters/image, etc.). Thus, in some embodiments, the method **900** may allow diagnosis of light source(s) in the LIDAR device.

At block **908**, the method **900** involves obtaining a second image indicative of detector positions of the one or more detectors. Similarly to the first image, the second image may be obtained using the camera located at the given position and focused at infinity. Referring back to FIG. **2**B by way of example, the second image may represent the detectors **232***a-c* that are viewable to the camera via the lens **250** and the mirror **242**. Referring back to FIGS. **6**A-**6**C as another example, the second image may represent the detector **632** that is viewable to the camera via the lens **654** and the mirror **660**. Thus, in some embodiments, the camera may obtain the first image and the second image while the camera is located at the same given position.

In some examples, the method **900** may also involve obtaining the second image while the one or more light sources are not emitting light at the source wavelength. For instance, a system performing the method **900** may reduce power to the one or more light sources and/or provide instructions to the LIDAR device to stop emitting light beams.

However, in other examples, the method **900** may involve obtaining the second image while the one or more light sources are emitting the light at the source wavelength. In one instance, a light filter may be interposed between the camera and the LIDAR device while the camera is capturing the second image, and the light filter may be configured to attenuate light at the source wavelength emitted by the one or more light sources. In this instance, the system performing the method **900** may then obtain the second image indicative of the detector positions while the light filter attenuates the light beams emitted by the one or more light sources. In another instance, the second image may indicate both the light source positions and the detector positions since the one or more light sources are emitting the light at the source wavelength when the second image is obtained. Other examples are possible as well.

In some examples, the method **900** may also involve obtaining the second image while the one or more detectors are illuminated with light at the source wavelength from an auxiliary light source. The auxiliary light source may be similar to the auxiliary light sources **170** and **870** included,

respectively, in the systems **100** and **800**. In one example, the camera may be focused at infinity for the source wavelength. In another example, a light filter interposed between the camera and the LIDAR device may be configured to attenuate light having wavelengths other than the source wavelength. In both examples, the auxiliary light source may illuminate the one or more detectors such that reflections of the illuminating light having the source wavelength are viewable by the camera when capturing the second image.

At block **910**, the method **900** involves determining at least one offset based on the light source positions indicated by the first image and the detector positions indicated by the second image. In one example, the at least one offset may include distances between adjacent regions of the first image that are associated with particular light sources. In another example, the at least one offset may include distances between adjacent regions of the second image that are associated with particular detectors. In yet another example, the at least one offset may include an offset between a region of the first image associated with a given light source, and a corresponding region of the second image associated with a given detector. The offset in the third example may have a horizontal component and a vertical component, or may just be a distance between the respective regions (e.g., number of pixels). As a variation of the third example, the offset may also include a depth component where the camera is configured to obtain 3D images, for instance. Other offsets are possible as well.

In some examples, the method **900** may also involve generating a composite image based on overlaying the first image and the second image. In these examples, the at least one offset may be determined based on separation between one or more pixels in the composite image associated with a light source and one or more pixels in the composite image associated with a corresponding detector.

At block **912**, the method **900** includes adjusting a relative position between the transmit block and the receive block based at least in part on the at least one offset. By way of example, a robotic arm or other device (e.g., alignment apparatuses **160**, **760**, **860**, etc.) may couple to the transmit block and/or the receive block to adjust the relative position. The robotic arm, for instance, may translate the coupled component linearly and/or rotate the coupled component about an axis in line with the discussion for the systems **100**, **700**, and **800**.

Accordingly, in some examples, the method **900** may also involve adjusting the relative position between the transmit block and the receive block by rotating the receive block about an axis. Further, in some examples, the method **900** may also involve adjusting the relative position by rotating the transmit block about an axis.

In some examples, adjusting the relative position between the transmit block and the receive block at block **912** reduces the at least one offset. For instance, where the at least one offset includes an offset between a light source and a corresponding detector, the adjustment of the relative position may reduce the offset to align the light source with the detector. In other examples, adjusting the relative position between the transmit block and the receive block at **912** causes the at least one offset to correspond to a particular offset. For instance, where the at least one offset includes an offset between two adjacent light sources, the adjustment of the relative position may cause the offset to correspond to the particular offset.

FIG. **10** illustrates an image **1000** indicative of light source positions of light sources in a transmit block of a LIDAR device, according to an example embodiment. The image **1000** may be similar to the first image described at block **906** of the method **900**. For instance, dark pixels in the image **1000** may represent light beams emitted by one or more light sources in a transmit block. Referring back to FIG. **3** by way of example, each of regions **1002**, **1004**, **1006** in the image **1000** may correspond, respectively, to light beams **302***a*, **302***b*, **302***c* emitted by light sources **322***a*, **322***b*, **322***c* of the transmit block **320**.

FIG. **11** illustrates an image **1100** indicative of detector positions of detectors in a receive block, according to an example embodiment. The image **1100** may be similar to the second image described at block **908** of the method **900**. Referring back to FIG. **5**A by way of example, regions **1102**, **1104**, **1106** in the image **1100** may correspond, respectively, to the detectors **532***a*, **532***b*, **532***c* of the receive block **530**.

FIG. **12** illustrates an image **1200** in a scenario where light sources in a transmit block and detectors in a receive block of a LIDAR device are aligned, according to an example embodiment. For example, the image **1200** may correspond to a composite image generated by overlaying the image **1000** and the image **1100**, in line with the discussion at block **910** of the method **900**.

However, in some examples, light sources and detectors in a LIDAR device may not be aligned with one another due to manufacturing/assembly variability or other factors.

FIG. **13** illustrates an image **1300** in a scenario where the light sources and the detectors of a LIDAR device are misaligned along the up/down DOF described in the discussion of FIG. **7**C, according to an example embodiment. Image **1300** may be a composite image determined similarly to the image **1200**. For instance, region **1302** may correspond to region **1006** of the image **1000**, and region **1304** may correspond to region **1106** of the image **1100**. In turn, the at least one offset determined at block **910** of the method **900** may correspond to a distance (e.g., pixel distance, etc.) between the region **1302** and the region **1304**, and a system (e.g., system **700**, etc.) may perform the adjustment of the relative position between the transmit block and the receive block to align the light source associated with region **1302** with the detector associated with region **1304**. By way of example, the system may adjust the up/down position of the transmit block and/or the up/down position of the receive block to reduce the determined offset, in line with the discussion above.

FIG. **14** illustrates an image **1400** in a scenario where the light sources and the detectors of the LIDAR device are misaligned along the left/right DOF described in the discussion of FIG. **7**C, according to an example embodiment. As a variation of the discussion for image **1300**, an offset in the LIDAR device of image **1400** may correspond to the distance between the regions **1402** (e.g., associated with a light source) and **1404** (e.g., associated with a corresponding detector).

FIG. **15** illustrates an image **1500** in a scenario where the light sources and the detectors are misaligned along the forward/backward DOF, according to an example embodiment. For instance, as shown in image **1500**, the regions that correspond to light source positions appear smaller and closer to one another, than the regions that correspond to detector positions. Similarly here, one or more offsets according to block **910** of the method **900** may be determined. An example offset may be a ratio between: (i) the distance between region **1502** and **1504** (e.g., particular detector positions), and (ii) the distance between regions **1506** and **1508** (e.g., corresponding light source positions). However, other offsets are possible as well such as offsets

determined by various image processing algorithms to detect differences in sizing or depth among other possibilities.

FIG. **16** illustrates an image **1600** in a scenario where the light sources and the detectors are misaligned along the roll DOF described in FIG. **7**C, according to an example embodiment. Similarly here, the offset between the roll position of the light sources and the roll position of the detectors may be determined. For instance, an image processing algorithm may determine such offset, and a system of the present method may adjust the relative position between the transmit block and the receive block accordingly. Alternatively, for instance, manual operation of a robotic arm may be employed by visual inspection of the image **1600** (e.g., video feed, etc.) to adjust the relative position between the transmit block and the receive block, among other possibilities.

FIG. **17** illustrates an image **1700** in a scenario where the light sources and detectors are misaligned along the yaw DOF described in FIG. **7**C, according to an example embodiment. For instance, as shown, light beams from light sources at a right side of the image **1700** (e.g., associated with regions **1702** and **1704**) are at a greater distance (e.g., offset) to one another than light sources at a left side of the image **1700** (e.g., associated with regions **1706** and **1708**). This variation may be due to the yaw of the transmit block. In contrast, distances between adjacent corresponding detectors (e.g., associated with regions **1710** and **1712**) do not exhibit the same variation, due to the receive block having a different yaw. Thus, in some examples, the present method may adjust the yaw of the receive block to correspond to the yaw of the transmit block. Alternatively or additionally, in some examples, the present method may adjust the yaw of the transmit block to correspond to the yaw of the receive block.

FIG. **18** illustrates an image **1800** in a scenario where the light sources and detectors are misaligned along the pitch DOF described in FIG. **7**C, according to an example embodiment. Similarly to the discussion above for the yaw misalignment in image **1700**, the transmit block in this scenario has a pitch orientation that is different from the pitch orientation of the receive block. For instance, a distance (e.g., offset) between light beams indicated by regions **1802** and **1804** is different from the distance between light beams indicated by regions **1806** and **1808**, due to the pitch of the transmit block. Further, corresponding detectors for those light beams are not similarly separated in the image **1800**, which indicates that the receive block has a different pitch than the pitch of the transmit block. In turn, similarly to the discussion above for image **1700**, the present method may adjust the pitch of the transmit block, the receive block, or both, to align the transmit block with the receive block, in line with the discussion at block **912** of the method **900**.

Although images **1200-1800** illustrate composite images overlaying a first image (e.g., image **1000**, etc.) with a second image (e.g., image **1100**), in some examples, the present method may determine the various offsets described above for images **1200-1800** without overlaying the two images. For instance, a computing device herein may determine the various offsets by comparing pixel locations in the first image **1000** with corresponding pixel locations in the second image **1100**. Other image processing techniques are possible as well (e.g., filtering, transforms, etc.) for determining the at least one offset described at block **910** of the method **900**.

Further, although images **1300-1800** illustrate scenarios where the light sources and the detectors are offset in only one DOF, in some examples, the light sources and the detectors may be offset in more than one DOF. For instance, a LIDAR device may have light sources and detectors that are offset in both the forward/backward DOF described in image **1500** and the roll DOF described in image **1600**. Other offset combinations are possible as well.

Further, although images **1000-1800** represent light sources and detectors of a LIDAR device having a similar configuration to the LIDAR device **200**, in some examples, similar images may be generated for any other LIDAR device configuration, such as the configuration of the LIDAR device **600** among other possibilities.

In addition to alignment of light sources and detectors of a LIDAR device, in some examples, the present method may facilitate diagnosis of the various components of the LIDAR device. As an example, FIG. **19** illustrates an image **1900** indicative of a defect or an aberration. Image **1900** is an example image of light beams from a transmit block, similarly to the image **1000**. For instance, region **1902** of image **1900** may correspond to a light beam from a light source, similarly to region **1002** of the image **1000**. In one example, region **1904** may represent a light beam from a defective light source. For instance, pixels in region **1904** may have a different color, brightness, intensity, or any other characteristic than pixels in other similar regions (e.g., region **1902**), due to a defect in the light source associated with region **1904**. In another example, region **1906** may be a region where a light beam from a light source is expected, and therefore the associated light source may also be defective. In yet another example, regions **1908** and **1910** appear distorted compared to similar regions (e.g., region **1902**). In turn, for instance, such distortions may indicate that optical elements (e.g., cylindrical lens **404** of FIGS. **4**B-**4**C, etc.) coupled to light sources associated with regions **1908** and **1910** may have aberrations, and the present method may therefore detect the aberrations. Other example defects and aberrations are possible as well. In some examples, the present method may detect the various defects/aberrations described above by comparing the various regions **1904-1910** with similar regions in the image **1900** (e.g., region **1902**, etc.). Additionally or alternatively, in some examples, the present method may detect the various defects/aberrations by comparing the image **1900** with a stored image (e.g., image **1000**).

FIG. **20** is a flowchart of another method **2000**, according to an example embodiment. Method **2000** shown in FIG. **20** presents an embodiment of a method that could be used with any of the systems **100**, **700**, **800**, the LIDAR devices **104**, **200**, **600**, **704**, **804**, the transmit block **320**, the light source **400**, and/or the receive block **530**, for example. Method **2000** may include one or more operations, functions, or actions as illustrated by one or more of blocks **2002-2004**. Although the blocks are illustrated in a sequential order, these blocks may in some instances be performed in parallel, and/or in a different order than those described herein. Also, the various blocks may be combined into fewer blocks, divided into additional blocks, and/or removed based upon the desired implementation.

At block **2002**, the method **2000** involves obtaining one or more images using a camera located at a given position at which the camera can image light beams emitted by one or more light sources in a transmit block of a LIDAR device and can image one or more detectors in a receive block of the LIDAR device. In some examples, the one or more images may include a single image that indicates both light source positions of the one or more light sources and detector positions of the one or more detectors. For instance, the single image may be similar to images **1200-1800** shown

in FIGS. **12-18**. In other examples, the one or more images may include a first image indicative of the light source positions and a second image indicative of the detector positions, similarly to the first image and the second image described, respectively, at blocks **906** and **908** of the method **900**.

In some examples, the method **2000** may also involve causing an actuator to move a light filter to a first position where the light filter is interposed between the camera and the LIDAR device, obtaining a first image indicative of light source positions of the one or more light sources while the light filter is at the first position, causing the actuator to move the light filter to a second position where the light filter is outside a field-of-view of the camera, and obtaining a second image indicative of detector positions of the one or more detectors while the light filter is at the second position. Referring back to FIGS. **7**A and **7**B by way of example, the actuator, the light filter, and the camera may correspond, respectively, to the actuator **712**, the light filter **708**, and the camera **706**. Thus, in this example, the method **2000** may adjust the position of the light filter **708** to the first position illustrated in FIG. **7**A to obtain the first image, and to the second position illustrated in FIG. **7**B to obtain the second image.

At block **2004**, the method **2000** involves adjusting a relative position between the transmit block and the receive block based on the one or more images. For instance, the adjustment at block **2004** may be similar to the adjustments described at block **912** of the method **900**, along some or all the six DOF (e.g., up/down, left/right, forward/backward, roll, yaw, pitch) of the transmit block, the receive block, or both. Through this process, for instance, the present method may align the one or more light sources with the one or more detectors.

In some scenarios, the process described for yaw or pitch alignment in the description of images **1700** and **1800** is less suitable than other methods herein. As an example, the variation in distances between adjacent light sources indicated by a first image (e.g., image **1000**) and the variation in distances between adjacent detectors indicated by a second image (e.g., image **1100**) may be insufficient for detection of yaw or pitch offsets between the transmit block and the receive block. For instance, the one or more detectors (or the one or more light sources) may be arranged closely to one another. As another example, the transmit block and the receive block may only include, respectively, one light source and one detector, similarly to the transmit block **620** and the receive block **630** shown in FIG. **6**C. Thus, in this example, there may be no adjacent light sources or adjacent detectors for the determination of the offsets described in the description of images **1700** and **1800**. Accordingly, in some embodiments, alternative or additional processes for rotational position alignment (e.g., yaw, pitch, roll) are presented below.

In one embodiment, the receive block may be coupled to a half-mirror positioned along a receive path of the receive block. Referring back to FIG. **2**B by way of example, the half-mirror may correspond to the entrance aperture **234** and may be configured to reflect at least a portion of light incident on the half-mirror, and the receive path may correspond to receive path **208**. Further, in this embodiment, the camera may be coupled to at least two light sources positioned along a periphery of a camera lens of the camera. The at least two light sources may be configured to emit light toward the LIDAR device. Further, in this embodiment, the method **2000** may also involve causing the at least two light sources to emit light pulses, and obtaining a third image from the camera indicative of reflections of the emitted light pulses off the half-mirror. In one instance, the method **2000** may also involve determining offsets between the reflections indicated by the third image, and determining the rotational position adjustment accordingly. In another instance, the method **2000** may alternatively involve comparing the third image with a stored image, and adjusting the relative position based on the comparison. For example, the stored image may indicate particular pre-determined offsets between the reflected light pulses that correspond to a particular yaw, pitch, or roll of the receive block. In this example, the method **2000** may adjust the relative position to achieve the particular offsets.

In another embodiment, the method **2000** may additionally or alternatively involve actuating at least two probes adjacent to the receive block toward the receive block. A given probe (e.g., force sensor, proximity sensor, etc.) may be configured to provide a signal indicative of contact (or proximity) between the given probe and the receive block. In this embodiment, adjusting the relative position may comprise rotating the receive block (e.g., adjusting yaw, pitch, or roll of the receive block) such that at least two signals from the at least two probes are provided at a substantially same time. For instance, the at least two probes may have a particular yaw or pitch substantially similar to the yaw or pitch of the transmit block, and thus by providing the at least two signals at the substantially same time, the yaw or pitch of the receive block may also correspond to the yaw or pitch of the transmit block.

FIG. **21** illustrates a partial cross-section view of yet another system **2100**, according to an example embodiment. The system **2100** may be similar to any of the systems **100**, **700**, or **800**. For instance, as shown, the system **2100** includes a LIDAR device **2104** that is similar to the LIDAR devices **104** and **704** the systems **100** and **700**. It is noted that some components of the system **2100** (e.g., alignment apparatus, mounting platform, etc.) are omitted from the illustration of FIG. **21** for convenience in description.

As shown, the LIDAR device **2104** has a configuration similar to the LIDAR device **200**. For instance, as shown, the LIDAR device **2104** includes a transmit block **2120**, light sources **2122***a-c*, receive block **2130**, detectors **2132***a-c*, an exit aperture **2134**, and a lens **2150** that are similar, respectively, to the transmit block **220**, the light sources **222***a-c*, the receive block **230**, the detectors **232***a-c*, the exit aperture **234**, and the lens **250** of the LIDAR device **200**. However, in some examples, the system **2100** may be adapted for use with other LIDAR device configurations such as the configuration of the LIDAR device **600**, etc. Further, as shown, the system **2100** includes an actuator **2190** and probes **2192-2194**.

The actuator **2190** may be configured to move the probes **2192** and **2194** toward the receive block **2130** in line with the discussion above at block **2004** of the method **2000**. Example actuators may include motors, pneumatic actuators, hydraulic pistons, relays, solenoids, and piezoelectric actuators among other possibilities.

The probes **2192** and **2194** may include any probes suitable for detection of the receive block **2130** in line with the discussion above at block **2004** of the method **2000**. In one example, the probes **2192-2194** may include force sensors that provide a signal if the probes **2192-2194** contact the receive block **2130**. In another example, the probes **2192-2194** may include proximity sensors (e.g., IR range sensors, etc.) that provide a signal if the probes **2192-2194** are within a threshold distance to the receive block **2130**.

In the illustration of FIG. **21**, a yaw of a component corresponds to an amount of rotation of the component about an axis of the component pointing out of the page. Further, a pitch of the component corresponds to an amount of rotation of the component about an axis of the component pointing away from the component. For instance, a pitch of the transmit block **2120** may be the amount of rotation of the transmit block **2120** about an axis perpendicular to one of the light sources **2122***a-c*, a pitch of the receive block **2130** may be the amount of rotation of the receive block **2130** about an axis perpendicular to the exit aperture **2134**, and a pitch of the probe **2192** may be the amount of rotation of the probe **2192** about an axis perpendicular to the probe **2192** that is pointing toward the receive block **2130**, etc.

In line with the discussion above, the system **2100** provides an example embodiment for the rotational position alignment described at block **2004** of the method **2000**. Consider an example scenario where the probes **2192-2194** have a particular yaw (i.e., amount of rotation about axis pointing out of page) as shown in FIG. **21**. In some examples, the particular yaw may be substantially similar to the yaw of the transmit block **2120**. In one example, the probes **2192-2194** may be mounted via a mounting apparatus (not shown) to the transmit block **2120**. In this example, the mounting apparatus may have a particular structure that causes the probes **2192-2194** to have a substantially similar yaw to the yaw of the transmit block **2120**. In another example, the probes **2192-2194** may be mounted to an alignment apparatus (e.g., alignment apparatus **160**, **760**, **860**, etc.) that provides the particular yaw. For instance, the system **2100** may determine the yaw of the transmit block **2120** by processing an image from a camera (not shown) in line with the description of the image **1700** of FIG. **17**. In turn, for instance, the system **2100** may adjust the particular yaw of the probes **2192-2194** by utilizing a robotic arm or other device coupled to the probes **2192-2194** among other possibilities.

Continuing with the example scenario, the actuator **2190** may move the probes **2192-2194** toward the receive block **2130** in line with the discussion at block **2004** of the method **2000**. On one hand, if the two probes **2192-2194** detect the receive block **2130** (e.g., provide a signal, etc.) at a substantially similar time, then the system **2100** may determine that the yaw of the receive block **2130** corresponds to the yaw of the probes **2192-2192**, and therefore also corresponds to the yaw of the transmit block **2120**. On the other hand, if the two probes **2192-2194** detect the receive block **2130** at substantially different times, then the system **2100** may determine that the yaw of the receive block **2130** does not correspond to the yaw of the probes **2192-2194**, and therefore does not correspond to the yaw of the transmit block **2120**. In this case, the system **2100** may then perform the adjustment of the relative position between the transmit block **2120** and the receive block **2130** in line with the discussion at block **912** of the method **900**. Through this process, for example, the transmit block **2120** and the receive block **2130** may be aligned with one another, at least with regard to the yaw DOF.

As a variation of the example scenario, the probes **2192-2194** may be arranged vertically (e.g., along an axis pointing out of the page) instead of the arrangement shown in FIG. **21**, or the system **2100** may include two additional probes (not shown) that are arranged vertically. In either case, the probes in this scenario may have a particular pitch (e.g., amount of rotation about an axis pointing away from the probes **2192-2194** toward the receive block **2130**). Similarly to the previous scenario, the particular pitch may also correspond to a pitch of the transmit block **2120**. Thus, in this scenario, a similar process to the previous scenario may be performed by the system **2100** to align the pitch of the receive block **2130** with the pitch of the transmit block **2120**.

As a further variation of the example scenarios above, the probes **2192-2194** may be alternatively moved by the actuator **2192** toward the transmit block **2120** instead of the receive block **2130**. In this scenario, the system **2100** may adjust the position of the transmit block **2120** to align the pitch and/or yaw of the transmit block **2120** with the pitch and/or yaw of the receive block **2130**.

FIG. **22** illustrates a front-view of a camera **2206**, according to an example embodiment. The camera **2206** may be similar to the cameras **106**, **706**, and **806** included, respectively, in the systems **100**, **700**, and **800**. For instance, the camera **2206** may be located at a given position where the camera can capture images of light beams emitted by a LIDAR device and can capture images of detectors in the LIDAR device, similarly to the cameras **106**, **706**, and **806**. However, in some examples, the camera **2206** may be located in other positions such as inside the housing of a LIDAR device, similarly to the probes **2192-2194** of the system **2100**. In these examples, the camera **2206** may be configured to only capture images of the detectors in the LIDAR device, or may be configured to only capture images of light beams emitted by the LIDAR device, among other possibilities.

As shown, the camera **2206** includes a lens **2210** and light sources **2212**, **2214**, **2216**, and **2218**. However, in some examples, the camera **2206** may include additional, fewer, or different components than those shown. In one example, the camera **2206** may alternatively not include the lens **2210**. For instance, the camera **2206** in this example may be an image sensor configured to capture images without use of the lens **2210**, among other possibilities. In another example, the camera **2206** may be alternatively configured not to include the light sources **2212-2218**, or may be configured to include additional or fewer light sources than the four light sources **2212-2218** shown, in accordance with the discussion at block **2004** of the method **2000**.

The lens **2210** may include one or more optical element (e.g., convex lens, concave lens, Fresnel lens, mirror, etc.) arranged to modify, condition, focus, and/or redirect light incident on the lens **2210** toward imaging sensors (not shown) of the camera **2206**. In some examples, the lens **2210** may be configured to provide an infinity focus for incident light having a source wavelength. In one embodiment, the source wavelength is 905 nm. However, other source wavelengths are possible as well (e.g., infrared, ultraviolet, x-ray, visible, etc.).

The light sources **2212-2218** may include laser diodes, light emitting diodes (LEDs), vertical cavity surface emitting lasers (VCSEL), organic light emitting diodes (OLEDs), polymer light emitting diodes (PLED), light emitting polymers (LEP), liquid crystal displays (LCD), microelectromechanical systems (MEMS), filament light sources, or any other device configured to selectively transmit, reflect, and/or emit light propagating away from the camera **2206**. In some examples, the light sources **2212-2218** may be configured to emit light at the source wavelength of light emitted by the LIDAR device (not shown) imaged by the camera **2206**. Referring back to FIG. **7**A by way of example, the camera **2206** may correspond to the camera **706** of the system **700**. Thus, in this example, the light sources **2212-2218** may emit light having the source wavelength that can propagate through the light filter **708** similarly to light emitted by the LIDAR device **704**. However, in other

examples, the light sources **2212-2218** may be configured to emit light at other wavelengths. For instance, the light filter may allow propagation of the light from the light sources **2212-2218** even if the light has other wavelengths, or the light filter may not be interposed between the camera **2206** and the LIDAR device, similarly to the configuration shown in FIG. **7**B, among other possibilities.

As shown, the light sources **2212-2218** are positioned along a periphery of the camera lens **2210**. However, in some examples, the light sources **2212-2218** may be alternatively positioned at a different location. In one example, referring back to FIG. **7**A, the light sources **2212-2218** may be alternatively positioned along a periphery of the light filter **708**. In another example, referring back to FIG. **21**, the light sources **2212-2214** may be alternatively positioned within a housing of the LIDAR device **2104** similarly to the probes **2192-2194**. As a variation of the previous example, the camera **2206** may be alternatively positioned inside the housing of the LIDAR device **2104** as well similarly to the actuator **2190**. In yet another example, referring back to FIG. **21**, the light sources **2212-2218** may be alternatively positioned at a periphery of the transmit block **2120** or at a periphery of the receive block **2130**. Other positions for the light sources **2212-2218** are possible as well.

Thus, in some examples, the light sources **2212-2218** may be utilized by a system of the present method to determine the at least one offset in line with the discussion at block **910** of the method **900**, and therefore facilitate the adjustment of the relative position between a transmit block and a receive block of a LIDAR device in line with the discussion at block **912** of the method **900**. In one example, the light sources **2212-2218** may facilitate alignment of the rotational position (e.g., yaw, pitch, roll) of a transmit block and a receive block in line with the discussion at block **2004** of the method **2000**.

As an example scenario for rotational position alignment using the camera **2206**, suppose that the camera **2206** corresponds to the camera **706** of the system **700**. In the scenario, the light sources **2212-2218** may be configured to emit light that propagates through the light filter **708** (e.g., if the light filter **708** is interposed between the camera **2206** and the LIDAR device **704** as illustrated in FIG. **7**A). Suppose that, for the sake of example, the LIDAR device **704** has the configuration of the LIDAR device **200** shown in FIG. **2**B. In this example, the light from the light sources **2212-2218** may propagate through the lens **250**, and then reflect off mirror **242** onto the entrance aperture **234**. Further, suppose that, in this example, the entrance aperture **234** includes a half-mirror that reflects at least a portion of the light from the light sources **2212-2218**. In turn, the reflected light may reflect off the half-mirror, then reflect off the mirror **242**, then propagate through the lens **250** of the LIDAR device, and then propagate into the lens **2210** of the camera **2206**. At this point in the scenario, the camera **2206** may capture an image of the reflected light in line with the discussion at block **2004** of the method **2000**.

Continuing with the scenario, a system of the present method may then analyze the image, in line with the discussion for images **1700-1800**, using the properties (e.g., position, shape, intensity, etc.) of the light beams originating from the light sources **2212-2218** to determine yaw or pitch offsets between the transmit block and the receive block.

As a variation of the scenario above, suppose that the light sources **2212-2218** are alternatively positioned along a periphery of the transmit block **220** of the LIDAR device **200**. In this scenario, four mirrors may be positioned at the positions shown for the light sources **2212-2218**. In turn, the four mirrors may reflect the light from the light sources **2212-2218** towards the receive block **230** of the LIDAR device **200**, and the camera **2206** may capture an image of reflections of that light off the entrance aperture **234** (e.g., half-mirror) to determine a possible yaw/pitch offset between the transmit block **220** and the receive block **230**.

As another variation of the scenario, suppose that the light sources **2212-2218** are alternatively positioned along a periphery of the receive block **230** of the LIDAR device **200**. In this scenario, a system of the present method may analyze an image of light from the light sources **2212-2218** in line with the discussion for images **1600-1800** to determine the rotational position (e.g., roll, yaw, pitch) of the receive block.

As yet another variation of the scenario, the light sources **2212-2218** may be alternatively positioned along a periphery of the transmit block **220** of the LIDAR device **200**, and four additional similar light sources may be positioned along the periphery of the receive block **230** of the LIDAR device **200**. Similarly here, one or more images of the light from the light sources **2212-2218** and the four additional light sources may be obtained from the camera **2206** and analyzed by the system of the present method to determine rotational offsets (e.g., roll, yaw, pitch) between the transmit block and the receive block. Thus, various configurations and positions are possible for the light sources **2212-2218** to facilitate optics alignment in line with the discussion above.

It should be understood that arrangements described herein are for purposes of example only. As such, those skilled in the art will appreciate that other arrangements and other elements (e.g. machines, interfaces, functions, orders, and groupings of functions, etc.) can be used instead, and some elements may be omitted altogether according to the desired results. Further, many of the elements that are described are functional entities that may be implemented as discrete or distributed components or in conjunction with other components, in any suitable combination and location, or other structural elements described as independent structures may be combined.

While various aspects and embodiments have been disclosed herein, other aspects and embodiments will be apparent to those skilled in the art. The various aspects and embodiments disclosed herein are for purposes of illustration and are not intended to be limiting, with the true scope being indicated by the following claims, along with the full scope of equivalents to which such claims are entitled. It is also to be understood that the terminology used herein is for the purpose of describing particular embodiments only, and is not intended to be limiting.

What is claimed is:

1. A method comprising:

mounting a transmit block and a receive block in a light detection and ranging (LIDAR) device to provide a relative position between the transmit block and the receive block, wherein the transmit block includes one or more light sources configured to emit light at a source wavelength, and wherein the receive block includes one or more detectors configured to detect light at the source wavelength;

locating a camera at a given position at which the camera, when focused at infinity, can image light beams emitted by the one or more light sources and can image the one or more detectors;

obtaining a first image using the camera located at the given position and focused at infinity, wherein the first image is indicative of light source positions of the one or more light sources;

obtaining a second image using the camera located at the given position and focused at infinity, wherein the second image is indicative of detector positions of the one or more detectors in the receive block;

comparing the first image with the second image to determine separation between one or more pixels associated with a light source and one or more pixels associated with a corresponding detector;

based on at least the comparison, determining at least one offset based on the light source positions indicated by the first image and the detector positions indicated by the second image; and

adjusting the relative position between the transmit block and the receive block based at least in part on the at least one offset.

2. The method of claim **1**, wherein the LIDAR device further includes a lens configured to (i) collimate light emitted from the one or more light sources and (ii) focus light onto the one or more detectors, and wherein the given position is such that the camera can image light beams emitted by the one or more light sources via the lens and can image the one or more detectors via the lens.

3. The method of claim **1**, wherein adjusting the relative position between the transmit block and the receive block comprises:

rotating the receive block about an axis.

4. The method of claim **1**, wherein obtaining the first image comprises:

obtaining the first image while the one or more light sources are emitting light at the source wavelength.

5. The method of claim **4**, wherein obtaining the first image further comprises:

obtaining the first image while a light filter is interposed between the camera and the one or more light sources, wherein the light filter is configured to attenuate light within a wavelength range that includes the source wavelength.

6. The method of claim **1**, wherein obtaining the second image comprises:

obtaining the second image while the one or more light sources are not emitting light at the source wavelength and the one or more detectors are illuminated with light at the source wavelength from an auxiliary light source.

7. The method of claim **1**, wherein comparing the first image with the second image comprises generating a composite image based on overlaying the first image and the second image, and

wherein the composite image includes the one or more pixels associated with the light source and the one or more pixels associated with the corresponding detector.

8. The method of claim **1**, wherein adjusting the relative position between the transmit block and the receive block reduces the at least one offset.

9. The method of claim **1**, wherein adjusting the relative position between the transmit block and the receive block causes the at least one offset to correspond to a particular offset.

10. The method of claim **1**, further comprising:

detecting a defect in a light source based on the first image.

11. The method of claim **1**, further comprising:

detecting an aberration in an optical element optically coupled to a light source based on the first image.

12. The method of claim **1**, wherein the receive block is coupled to a half-mirror positioned along a receive path of the receive block, wherein the camera is coupled to at least two light sources positioned along a periphery of a camera lens of the camera and configured to emit light toward the LIDAR device, the method further comprising:

causing the at least two light sources to emit light pulses;

obtaining a third image from the camera indicative of reflections of the emitted light pulses off the half-mirror coupled to the receive block; and

comparing the third image with a stored image, wherein adjusting the relative position between the transmit block and the receive block is further based on the comparison.

13. The method of claim **1**, further comprising actuating at least two probes positioned adjacent to the receive block toward the receive block, wherein a given probe is configured to provide a signal indicative of contact between the given probe and the receive block, wherein adjusting the relative position between the transmit block and the receive block comprises rotating the receive block such that at least two signals from the at least two probes are provided at a same time.

14. A system comprising:

a mounting platform to mount a light detection and ranging (LIDAR) device that provides a relative position between a transmit block in the LIDAR device and a receive block in the LIDAR device, wherein the transmit block includes one or more light sources configured to emit light at a source wavelength, wherein the receive block includes one or more detectors configured to detect light at the source wavelength;

a camera located at a given position at which the camera, when focused at infinity, can image light beams emitted by the one or more light sources and can image the one or more detectors;

an alignment apparatus configured to adjust the relative position between the transmit block and the receive block; and

a controller configured to:

obtain a first image from the camera located at the given position and focused at infinity, wherein the first image is indicative of light source positions of the one or more light sources;

obtain a second image from the camera located at the given position and focused at infinity, wherein the second image is indicative of detector positions of the one or more detectors in the receive block;

compare the first image with the second image to determine separation between one or more pixels associated with a light source and one or more pixels associated with a corresponding detector;

based on at least the comparison, determine at least one offset based on the light source positions indicated by the first image and the detector positions indicated by the second image; and

cause the alignment apparatus to adjust the relative position between the transmit block and the receive block based at least in part on the at least one offset.

15. The system of claim **14**, wherein the LIDAR device further includes a lens configured to (i) collimate light emitted from the one or more light sources and (ii) focus light onto the one or more detectors, and wherein the given position is such that the camera can image light beams emitted by the one or more light sources via the lens and can image the one or more detectors via the lens.

16. The system of claim **14**, further comprising:

a light filter configured to attenuate light within a wavelength range that includes the source wavelength; and

an actuator coupled to the light filter, wherein the controller is further configured to:

cause the actuator to move the light filter to a first position where the light filter is interposed between the camera and the one or more light sources;

obtain the first image while the light filter is at the first position;

cause the actuator to move the light filter to a second position where the light filter is outside a field-of-view of the camera; and

obtain the second image while the light filter is at the second position.

17. The system of claim **14**, further comprising:

at least two light sources positioned along a periphery of a camera lens of the camera and configured to emit light toward the LIDAR device, wherein the receive block is coupled to a half-mirror positioned along a receive path of the receive block, and wherein the controller is further configured to:

cause the at least two light sources to emit light pulses;

obtain a third image from the camera indicative of reflections of the emitted light pulses off the half-mirror coupled to the receive block; and

adjust the relative position between the transmit block and the receive block based also on the third image.

18. The system of claim **14**, further comprising:

at least two probes positioned adjacent to the receive block, wherein a given probe is configured to provide a signal indicative of contact between the given probe and the receive block, and wherein the controller is further configured to:

control an actuator to move the at least two probes toward the receive block; and

cause the alignment apparatus to rotate the receive block such that at least two signals from the at least two probes are provided at a same time.

19. The system of claim **14**, wherein causing the alignment apparatus to adjust the relative position between the transmit block and the receive block reduces the at least one offset.

20. The system of claim **14**, wherein the controller is further configured to:

detect an aberration in an optical element optically coupled to a light source based on the first image.

* * * * *