US006367168B1

(12) **United States Patent**
Hatfield et al.

(10) **Patent No.: US 6,367,168 B1**
(45) **Date of Patent: Apr. 9, 2002**

(54) **ARTICLE OF FOOTWEAR INCLUDING A TENTED UPPER**

(75) Inventors: **Tinker L. Hatfield**, Portland; **Michael A. Aveni**, Lake Oswego; **Michael R. Friton**, Portland, all of OR (US)

(73) Assignee: **Nike, Inc.**, Beaverton, OR (US)

(*) Notice: Subject to any disclaimer, the term of this patent is extended or adjusted under 35 U.S.C. 154(b) by 0 days.

(21) Appl. No.: **09/626,139**

(22) Filed: **Jul. 26, 2000**

(51) **Int. Cl.**[7] **A43B 13/38**; A43B 13/22; A43B 3/24; A43B 7/06; A43B 23/00

(52) **U.S. Cl.** ..... **36/45**; 36/72 R; 36/96; 36/101; 36/3 A; 36/7.1 R

(58) **Field of Search** ..... 36/11.5, 45, 49, 36/51, 55, 56, 57, 58.6, 72 R, 73–96, 101, 3 A, 7.1 R, 7.3

(56) **References Cited**

U.S. PATENT DOCUMENTS

11,947	A		11/1854	Pease	
494,598	A	*	4/1893	Russell	36/11.5
757,424	A		4/1904	Vohl	
D47,238	S		4/1915	Miller	
1,258,629	A		5/1918	Bliss	
1,663,319	A	*	3/1928	Snell	36/45
1,900,515	A	*	3/1933	Miller	36/11.5
1,952,294	A	*	3/1934	Strauss	36/96
2,015,479	A	*	9/1935	Koomruian	36/11.5
2,160,768	A	*	5/1939	Wasser	36/72 R
2,392,867	A	*	1/1946	Stoner et al.	36/72 R
3,102,347	A	*	9/1963	Griswold et al.	36/96
3,175,311	A	*	3/1965	MacQuaid	36/77 R
4,231,170	A	*	11/1980	Griswold	36/72 R
4,656,761	A	*	4/1987	Lord	36/77 R
4,677,767	A		7/1987	Darby	
4,908,963	A	*	3/1990	Krajcir et al.	36/77 R
5,497,564	A		3/1996	Allen et al.	
5,659,982	A		8/1997	Muraoka et al.	
5,704,138	A		1/1998	Donnadieu	
5,878,511	A	*	3/1999	Krajcir	36/77 R
5,926,978	A		7/1999	Smith	
6,029,376	A		2/2000	Cass	

* cited by examiner

Primary Examiner—Anthony Stashick
(74) *Attorney, Agent, or Firm*—Banner & Witcoff, Ltd.

(57) **ABSTRACT**

An article of footwear has an upper in a tented arrangement. The article of footwear includes a sole and an upper including a shroud. The article of footwear further includes a foot engaging system for joining a foot of a user to the sole, and a biasing system which includes a plurality of frame members that urges or influences the shroud away from the foot of the user. The article of footwear further includes a plurality of straps for holding the foot to the sole in which one of the straps engages the heel. The straps are located on an exterior surface of the shroud or alternatively they are located in the interior of the shroud. Air gaps are created between the shroud and the foot for ventilation. Several foot booties for holding a foot have vent openings for providing air to ventilate the foot of a wearer. Further, the foot booties are combined with straps, in which the straps are disposed between the shroud and the foot booties. The upper has a flexible sheet of material that is interconnected with a plurality of frame members that urges the sheet away from the foot of a wearer.

35 Claims, 4 Drawing Sheets

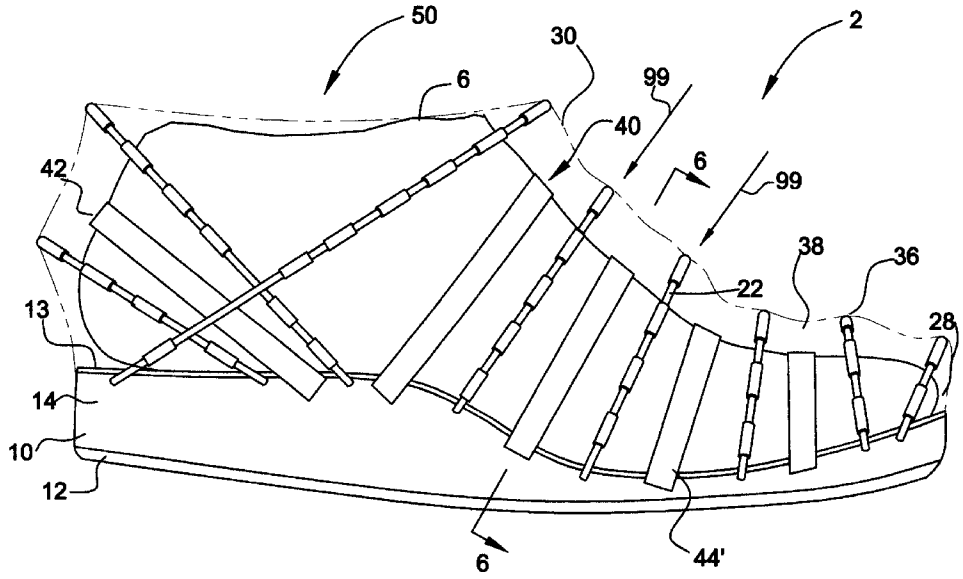

lululemon Ex. 1010
IPR Petition - USP 9,730,484

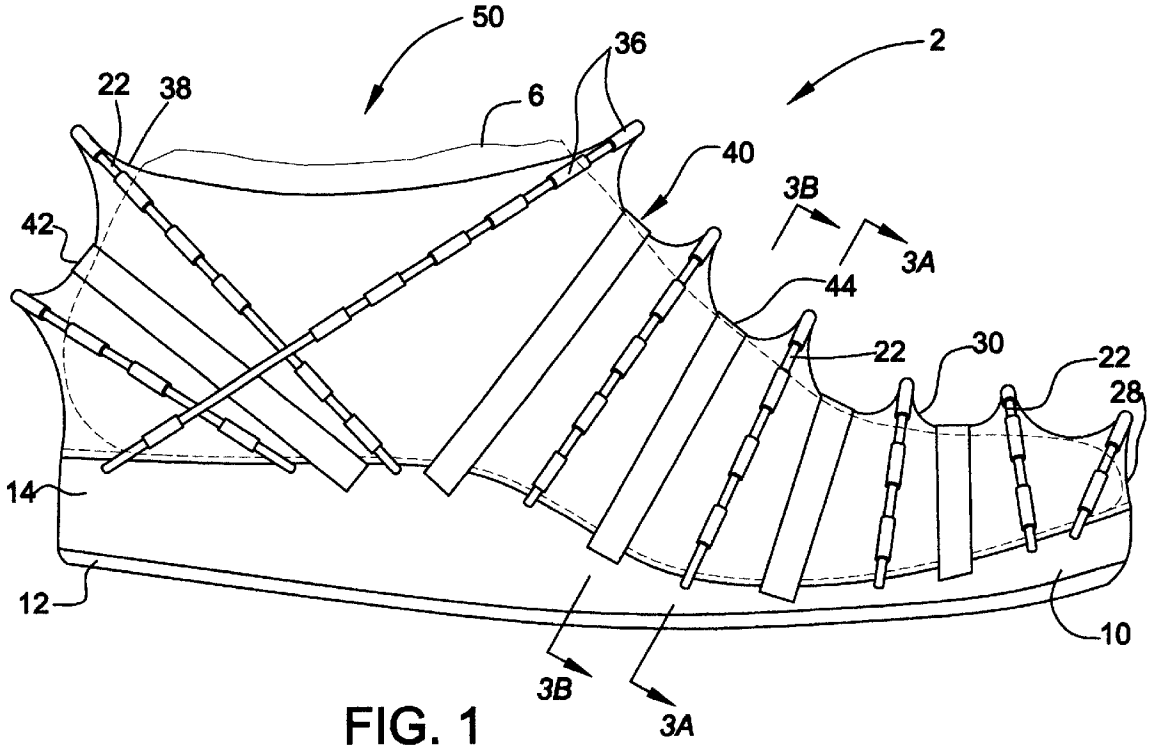

FIG. 1

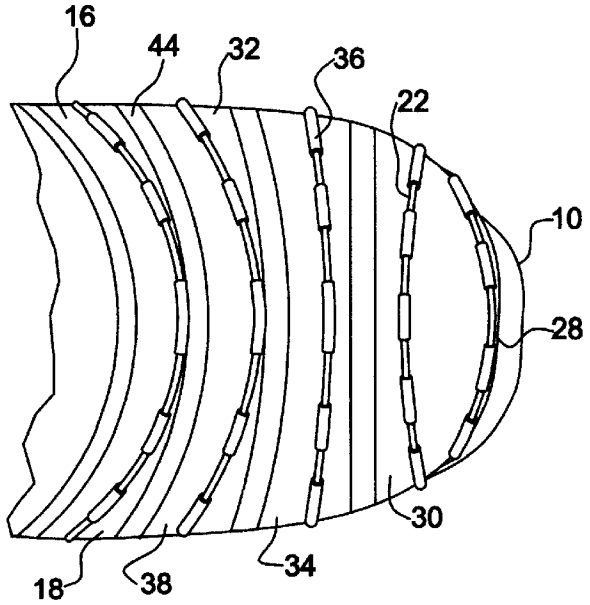

FIG. 2

lululemon Ex. 1010
IPR Petition - USP 9,730,484

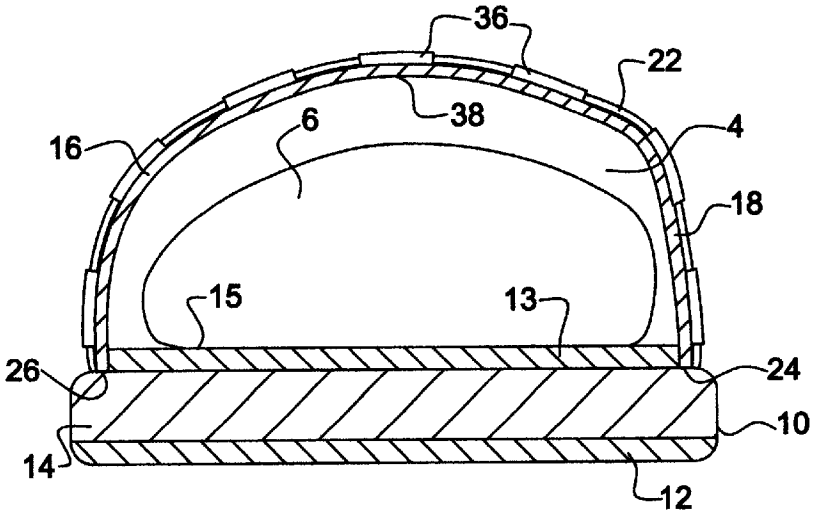

FIG. 3A

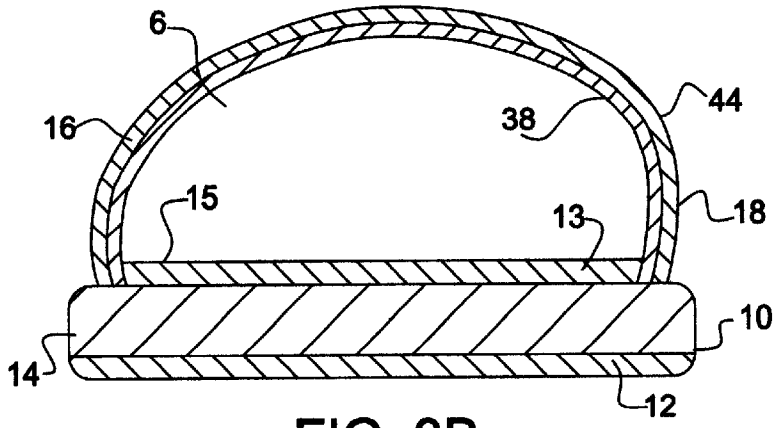

FIG. 3B

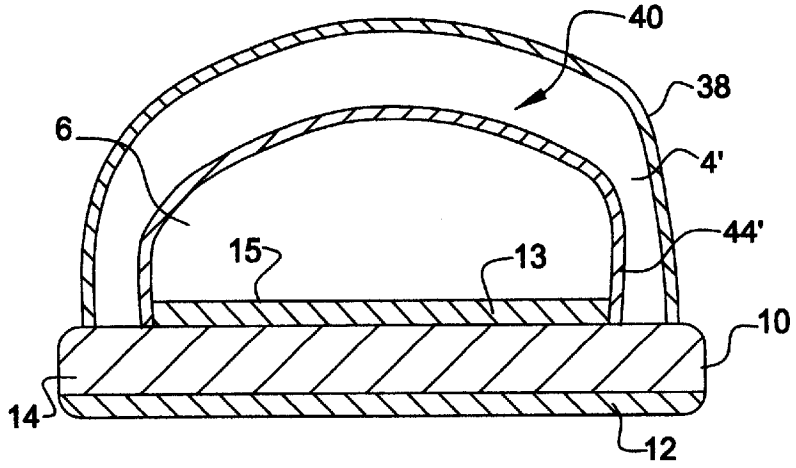

FIG. 6

lululemon Ex. 1010
IPR Petition - USP 9,730,484

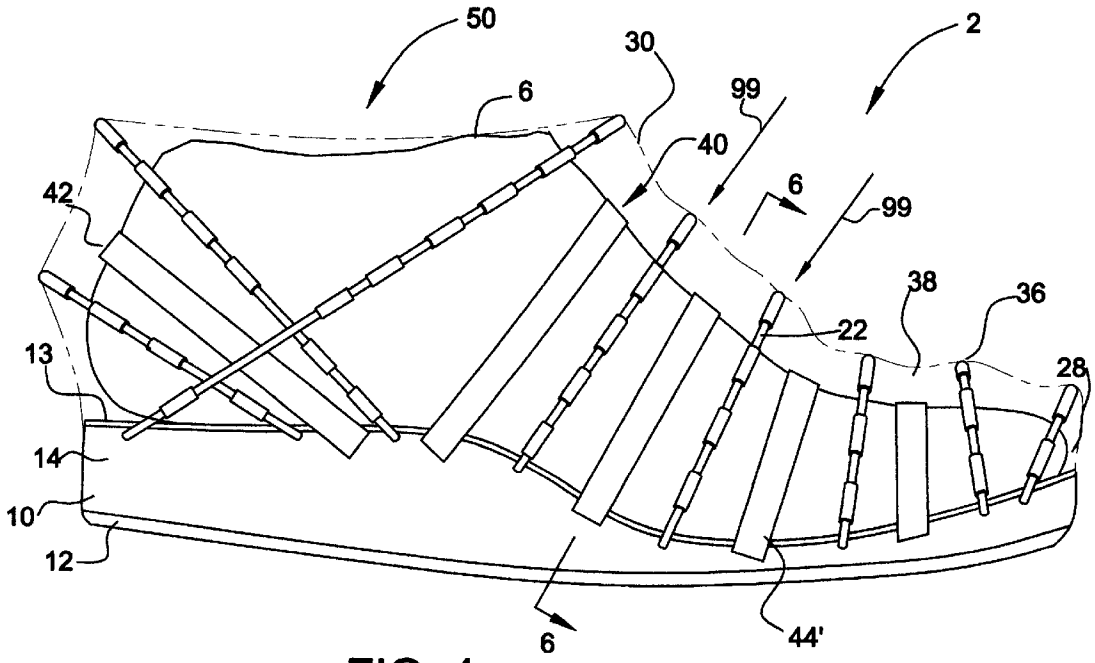

FIG. 4

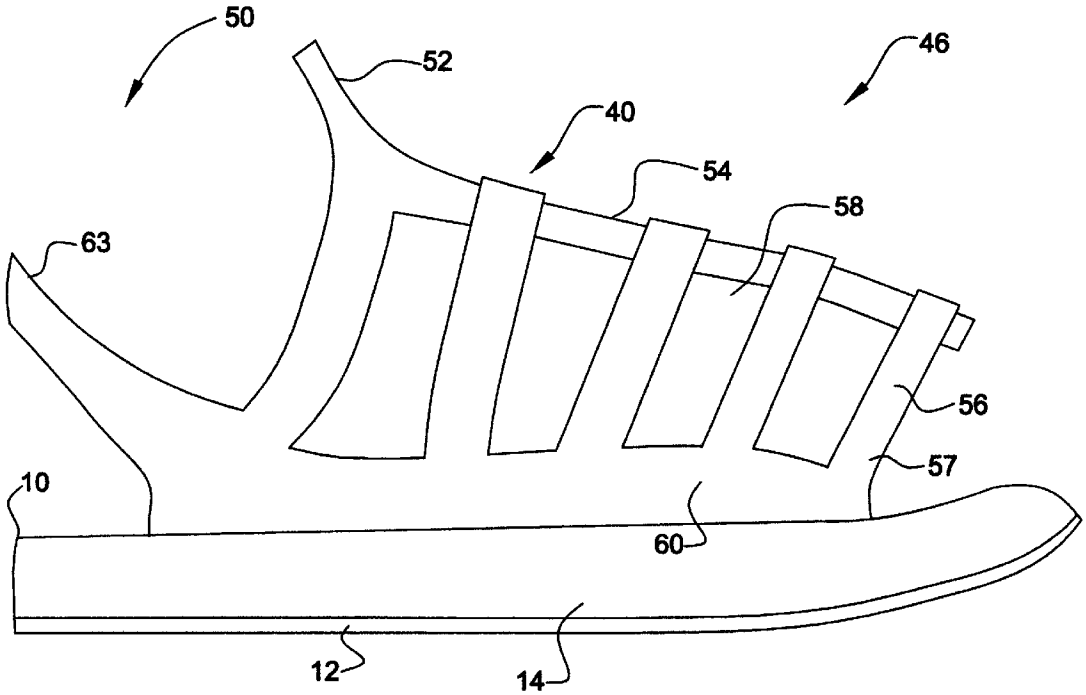

FIG. 5

lululemon Ex. 1010
IPR Petition - USP 9,730,484

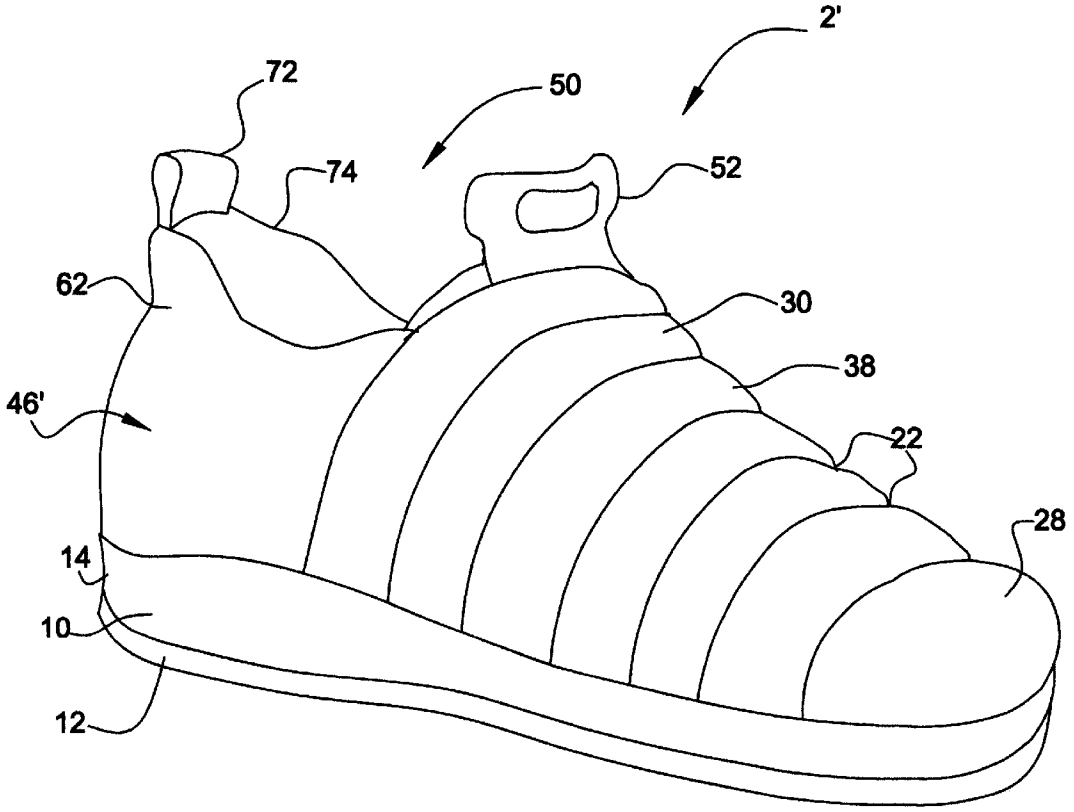

FIG. 7

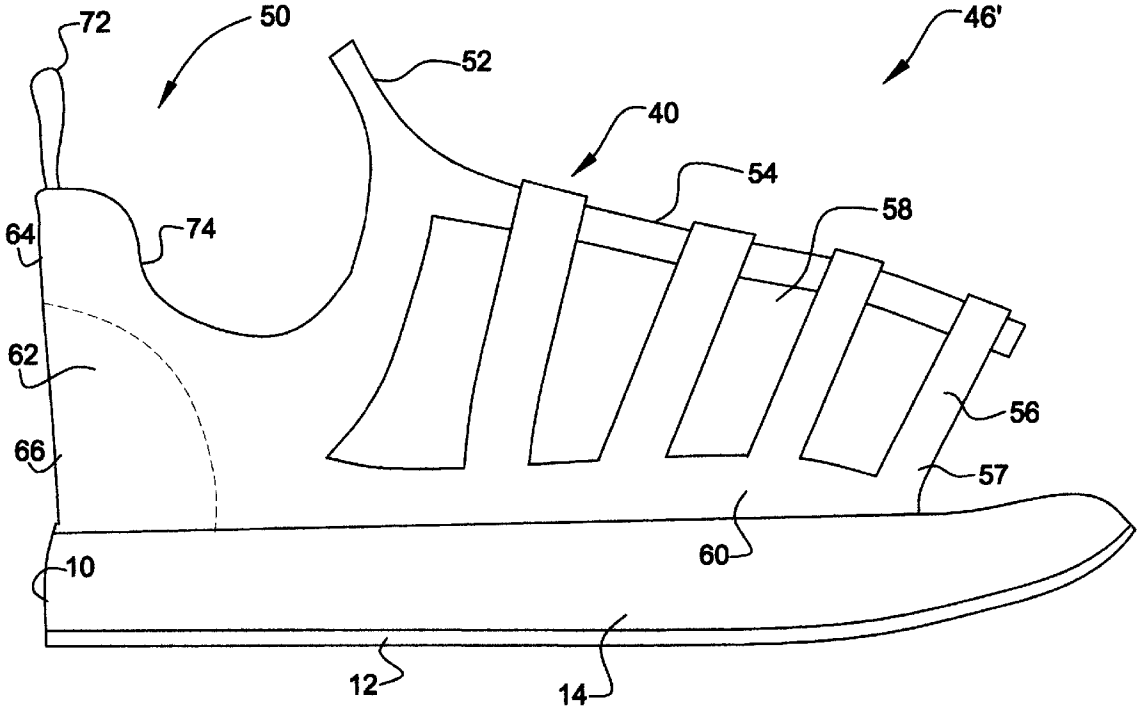

FIG. 8

lululemon Ex. 1010
IPR Petition - USP 9,730,484

ARTICLE OF FOOTWEAR INCLUDING A TENTED UPPER

FIELD OF THE INVENTION

This invention relates to an article of footwear, especially for athletic shoes. More particularly, the invention relates to a comfortable, lightweight athletic shoe with an upper having a covering and a supporting framework for creating a tent-like structure.

BACKGROUND OF THE INVENTION

Proper fitting and comfortable shoes are important for foot development and athletic performance. One function of a shoe is to support and protect the foot. To this end, a shoe, typically an athletic shoe, includes a sole to provide traction, support and cushioning. A shoe also includes an upper that is typically stitched and/or glued to the upper periphery of the sole. The upper is intended to contact and hold the foot of the wearer to the sole, to provide a tight and comfortable fit. The upper typically also has a fastening system, such as a lace and eyelets in the upper material. The ends of the lace are tied together so the upper squeezes the foot within the shoe.

Uppers are frequently constructed of leather and other materials having properties similar to leather. Leather and other similar materials may retain moisture and do not permit the foot to readily breathe. The foot may generate an excessive amount of moisture, may become hot or overheated in an upper made of leather or similar materials. When an athletic shoe is used in hot weather, the temperature and moisture within the interior space of the upper may become elevated. This problem will effect the overall comfort and the fit of the shoe for the wearer. Further, these materials are relatively heavy making them unsuitable for certain athletic shoes, such as running shoes.

The disadvantages of leather and leather-like materials for shoe upper construction led to the development of uppers constructed at least in part of various synthetic materials. Most of these synthetic materials are polymer meshes that are light and breathable. Meshes can be advantageous in athletic shoes where a lightweight shoe is important to the athlete's performance during athletic activities, e.g., running and walking events. The mesh also allows the foot to breathe thereby keeping the foot relatively dry during athletic activities. However, the breathability of mesh materials can be improved if they are not contacting the surface of the foot or if a small portion of the material is contacting a foot.

One approach to providing air circulation to the foot is disclosed in U.S. Pat. No. 757,424 to Vohl. This patent discloses a lining that is placed inside of a shoe forming gaps between the lining and the upper material. The lining includes ribs fastened to the outer surface of the lining. This structure provides for air to flow within the gaps with the intent to ventilate the shoe. While Vohl has ribs fastened to the lining material, the system is used within an upper of a shoe. The lining reduces the interior space within the upper thereby undesirably reducing the shoe size and potentially causing the wearer discomfort at the skin because the foot will be rubbing or sensing the ribs within the upper. While alleging to provide increased air circulation to the foot, this lining does not appear to be suitable for a lightweight athletic shoe.

Sandals and similar footwear provide for support of the foot. These types of footwear leave the foot or at least the forefoot portion of the foot exposed. While these types of footwear provide for air circulation around the foot, because

the foot is exposed, they may not provide suitable protection for the foot. The foot may be injured by debris or sunlight ultraviolet rays may damage the exposed foot. Additionally, sandals and similar type of footwear are not typically designed for athletic activities, such as running or cross-training.

Accordingly, an improved shoe upper for an article of footwear was needed to overcome the problems in the prior art.

SUMMARY OF THE INVENTION

The present invention is directed to an article of footwear having an upper in a tented arrangement to solve the problems in the prior art.

One aspect of the present invention is an article of footwear, such as an athletic shoe. The article of footwear includes a sole for engaging a ground surface and an upper including a shroud. The article of footwear further includes a foot engaging system for holding a foot of a user to the sole, and at least one frame member that urges or influences the shroud away from the foot of the user. The article of footwear further includes a plurality of straps for holding the foot to the sole in which one of the straps engages the heel. In another aspect of the present invention, straps are located on an exterior surface of the shroud in which multiple air gaps are created for cooling the foot. In another aspect of the present invention the straps are located interior of the shroud for creating a substantial air gap for air to be conveyed to the foot.

In another aspect of the present invention, the article of footwear further includes a foot bootie system for the holding the foot of a wearer. The foot bootie system includes vent openings for providing air to ventilate the foot of a wearer. Further the foot bootie system is combined with a plurality of straps for securing the foot to the sole of the shoe.

In another aspect of the present invention an article of footwear includes a tented shroud including a shroud and a frame member attached to the sole. The tented shroud covers the entire foot or a forefoot portion. In another aspect of the present invention, an upper has a flexible sheet of material that is interconnected with a plurality of frame members for tenting the flexible sheet of material.

It is an object of the present invention to provide a shoe that achieves support for a user's foot with a maximum amount of flexibility and breatheability with minimum weight. It is a further object of the invention to minimize the amount of the upper contacting the foot of a wearer. Yet another object of the invention is to provide a structure to ventilate the foot of a wearer.

The above and other objects, features and advantages of the present invention will be readily apparent and fully understood from the following detailed description of preferred embodiments, taken in connection with the appended drawings.

BRIEF DESCRIPTION THE DRAWINGS

FIG. **1** is a side elevational view of the lateral side of an article of footwear of the present invention;

FIG. **2** is a top plan view of the forefoot region of the article of footwear shown in FIG. **1**;

FIG. **3**A is a cross-section taken through line **3**A—**3**A of FIG. **1**;

FIG. **3**B is a cross-section taken through line **3**B—**3**B of FIG. **1**;

lululemon Ex. 1010
IPR Petition - USP 9,730,484

FIG. **4** is a schematic side elevational view of an alternate embodiment of an article of footwear of the present invention;

FIG. **5** is a side elevational view of the article of footwear of FIG. **4** with the shroud and frame members removed to reveal one embodiment of a foot engaging system of the present invention;

FIG. **6** is a vertical cross-sectional view taken through line **6**—**6** of FIG. **4**;

FIG. **7** is an isometric view of an article footwear according to another alternative embodiment of the present invention where the shroud substantially encloses the forefoot portion of the shoe; and

FIG. **8** a side elevational view of the lateral side of an article of footwear of FIG. **7** revealing an alternative foot engaging system of the present invention.

DETAILED DESCRIPTION OF THE PREFERRED EMBODIMENTS

With reference to FIGS. **1**–**8**, an article of footwear, for example an athletic shoe, in accordance with the present invention is illustrated. The article of footwear is generally referred to herein as a shoe and designated as numeral **2**. The shoe **2** includes a sole **10** and an upper **30**. The upper **30** has a foot engaging system **40** and a tented or tent-like structure to protect the foot and provide enhanced breathability. It should be noted that the terms "tented" or "tent-like" are defined herein as a structure having a layer of material or outer covering that is stretched or otherwise connected to a supporting framework of elements so as to form a substantially enclosing structure. Further the term "tenting" is defined herein as creating a tented or tent-like structure.

The shoe **2** has a medial side **16** and a lateral side **18**. When the shoe **2** is worn the lateral side **18** generally faces away from the center line of a user's body. Likewise, the medial side **16** generally faces inward towards the centerline of a user's body. The sole **10** may further include an outsole **12** and a midsole **14**. The outsole **12** provides a lower ground engaging surface designed for traction and typically made of a tough rubber material for wear resistance. The midsole **14** provides cushioning and support and is more compressible than outsole **12** to achieve its cushioning function. Any conventional sole design may be used provided that it has sufficient support and traction for the foot of the wearer for the desired activity or sport to be performed.

As shown in FIGS. **3**A and **3**B, the shoe **2** may include an insole or sockliner **13** disposed inside of the shoe **2** and is preferably positioned between the foot **6** of the wearer and the sole **10**. In addition, the sockliner **13** further includes an upper surface defining a footbed **15**, that is the portion of the shoe **2** that is in contact with the bottom of the foot **6** of the wearer. The sockliner **13** provides additional cushioning and shock absorption of the shoe **2**. If desired, the sockliner **13** may be removable and replaceable for the shoe **2**.

The shoe **2** further includes the foot engaging system **40**. The foot engaging system **40** serves to hold or secure the foot **6** of a wearer to the shoe **2**, in particular, to the footbed **15** and the sole **10**. A foot opening **50** enables a user to insert his or her foot **6** through the shroud **38** and into the shoe **2**. The foot engaging system **40** may be disposed on the top of the shroud **38** as shown in FIG. **1** or may be disposed below the shroud **38** as shown in FIGS. **4** and **7**.

The upper **30** includes an outer covering or a shroud **38** and supporting framework of a plurality of biasing or frame members **22** forming the tented or tent-like arrangement of the shoe **2**. The shroud **38** functions to conceal and to provide breathability for the foot **6** of a wearer within the shoe **2**. Additionally, the shroud **38** protects, and screens the foot **6** within the shoe **2** from debris. The frame members **22** are connected to the shroud **38** so as to influence or otherwise keep at least a portion of the shroud **38** away from the foot **6** of the wearer. The upper **30** similarly includes a medial side **32** and a lateral side **34**. The shroud **38** may be secured to the sole **10** in any conventional manner, e.g., by stitching and/or gluing to the top surface of sole **10**. Although the shroud **38** is preferably attached to the sole **10** on the medial side **16** and the lateral side **18**, the shroud **38** may be removably attached from the sole **10** and to the frame members **22**. Toe box **28** may include a wear resistant material, such as a plastic or rubber, located on the exterior or interior of the front portion of the shroud **38** for extending the life of the shoe **2**.

With reference to the embodiments shown in FIGS. **1**–**6**, the shroud **38** extends from the lateral side **18** to the medial side **16** of the sole **10** and extends from the toe box **28** to the heel of the user including the entire foot **6** of the wearer, including the rearfoot region. Shroud **38** may be attached directly to sole **10** comprising most of the external surface of upper **30**. With reference to the embodiment shown in FIGS. **7** and **8**, the shroud **38**, however can cover just the forefoot region and toe box **28** for the foot **6**.

Referring to the embodiments shown in FIGS. **1**–**8**, the upper **30** further includes a plurality of frame members **22** extending from the medial side **16** to the lateral side **18** of the shoe **2**. The frame members **22** contact the shroud **38** to form the tent-like structure of the shoe **2**. The frame members **22** are preferably constructed and arranged with a resilient bias such that the shroud **38** is urged or influenced away from the foot **6** of a user. The urging feature of the frame members **22** pushes the shroud **38** outward. This substantially keeps the shroud **38** from contacting the foot **6** in at least the regions adjacent to frame members **22** and keeps the foot **6** or a portion of the foot **6** enclosed in the tent-like arrangement of the shoe **2**. If desired, some frame members, not shown, may run in the longitudinal direction along the medial side **32** or lateral side **34** of the upper **30**. That is the longitudinal direction running from the toe box **28** to the rear heel portion of the shoe **2**. These additional frame members could join adjacent frame members **22** running between the lateral **18** and medial **16** sides.

The frame members **22** are preferably attached to the sole **10**, in particular to the midsole **14** of the shoe **2**. The method of attaching of the frame member **22** to the sole **10** may be of any desirable method, such as bonding with adhesive, molded in situ, or a mechanical fastening technique. In one arrangement, the midsole **14** includes a plurality of depressions formed to mate with the lateral ends **24** and medial ends **26** of the frame members **22**. In yet another arrangement, the frame members **22** may be removable such that different rods of various elasticity properties, weights or sizes may be selectively changed by the wearer. This is advantageous for wearer options depending on the sport of intended use.

The frame members **22** are preferably elongated rods of any desired cross section, such as circular, square, rectangular, or triangular. The frame members **22** are preferably non-conductive, and resilient in that they easily and quickly recover to a desired shape after being bent or otherwise deformed. The frame members **22** are preferably constructed from any suitable flexible plastic material, such as nylon, (HYTREL), ABS, Styrene or an elastomeric material, or if desired of a metal. The frame members **22**

lululemon Ex. 1010
IPR Petition - USP 9,730,484

may also be formed with other suitable resilient materials, such as polymer composite materials, or fiber reinforced plastics. If desired, the frame members **22** may have a elongated thin planar feature formed out of plastic for providing increased force to bias the shroud **38**. As assembled, each frame member **22** has a "tenting resistance" which is defined as the resistance against deflection at its center point when deflected in the plane of the member **22**, such as shown by arrows **99** in FIG. **4**. This may be determined by using an Instron machine to apply a force of the center of the frame member **22** in the plane of the frame member **22**. The machine can deflect the frame member **22** by 10 mm and the force per distance deflected is measured. In a preferred embodiment, the tenting resistances of the frame members **22** are in the range between 0.2–2.5 Newtons per millimeter, and more preferably in the range between 0.3–1.0 Newtons per millimeter. In one preferred arrangement, the tenting resistance of at least some of the frame members **22** is approximately 0.5 Newtons per millimeter.

To provide the shoe **2** with the tented and tent-like structure and shoe shape, the frame members **22** may be threaded through a channel to urge or bias the shroud **38** off the foot **6**. The frame members **22** are interconnected to the shroud **38** by a coupling system such as loops or sleeves, retained with the shroud **38** or by an adhesive. The plurality of spaced loops **36** may be disposed on the exterior or interior surface of the shroud **38**. As shown in FIGS. **1** and **2**, each individual frame member **22** is connected to the shroud **38** by the spaced loops **36**. The loops **36** are in substantial alignment to form a pathway or channel for a frame member **22** so as to provide insertion of the members **22** through the loops **36** for connection to the medial **16** and lateral side **18** of the shoe **2**. The loops **36** may be constructed of plastic or the material of the shroud **38**. The loops **36** in plastic may be glued or otherwise bonded to the shroud **38**. Likewise, if the loops **36** are formed with the material of the shroud **38**, they may be sewn, stitched, or otherwise fastened to the shroud **38**. Additionally, the coupling system may embody a plurality of sleeves (not shown) arranged in a similar alignment as the loops **36**. In the sleeve arrangement, the sleeves may be constructed of the same material as the shroud **38**.

In the loop or sleeve embodiment for the coupling system, the shroud **38** may move relative to the frame members **22** along the longitudinal axis of an individual frame member **22**. This movement provides for greater flexibility of the upper **30** such that the shroud **38** will remain generally taut when the frame members **22** are bent or deformed. The coupling system may use an adhesive bond between the surface of the shroud **38** and the exterior surface of a frame member **22**.

With reference to the embodiments shown in FIG. **1–3**, the shoe **2** further includes a foot engaging or holding system **40** that retains the foot **6** of the user. In particular, the foot engaging **40** system tightly holds the foot **6** of a wearer to the footbed **15** and sole **10**. The foot engaging system **40** includes a plurality of strap members **44** for tightening and securing the foot **6**. The strap members **44** are disposed on the external surface of the shroud **38** in the forefoot region and the rearfoot region of the shoe **2**. This forms an exo-skeleton or skeletal type structure of narrow bands of the shoe **2** to hold the foot **6** to the sole **10**. These strap members **44** minimize the amount the shoe **2** contacting the foot **6** to allow it to breathe within the upper **30**. Each individual strap member **44** extends from the medial side **16** to the lateral side **18** of the shoe **2**. Strap members **44** are fixedly attached to the sole **10** by any conventional manner, such as adhesive bonding, or stitching.

Referring to the forefoot region of the shoe **2**, each strap member **44** is interposed between adjacent frame member **22** or at least one pair of frame members **22**. This interposition facilitates the reliable connection of the foot **6** to the sole **10**. The preferred quantity of strap members **44** may vary between two and five. As shown in FIG. **1**, the shoe **2** includes four strap members **44** in the forefoot section and a heel locking strap **42** in the rearfoot region.

The heel locking strap **42** engages the Archilles heel portion of the foot **6** so as to secure and hold the heel to the footbed **15** and sole **10**. The heel locking strap **42** is also interposed preferably between the two frame members **22** located at the heel region of the rear of the upper **30**.

Referring to FIGS. **1–3**, in use, the untightened or loose strap members **44** allows air to circulate around the foot **6**. When the strap members **44** are tightened, small portions of the shroud **38** are pulled towards the foot **6**. Minimal airflow is restricted within the upper **30** where the straps members **44** and shroud **38** contact the top of the foot **6**. Because the frame members **22** are still in tension and forcing the shroud **38** away from the foot **6**, a plurality of triangular-shaped air gaps **4** are formed between the frame members **22** and the strap members **44**. The air gaps **4** allows the tented or tent-like upper **30** to have air to flow into the interior of the shoe **2**. As such, each air gap **4** forms a channel-like arrangement extending from the medial side **16** to the lateral side of the shoe **2** whose cross section is generally triangular.

The strap members **44** and the heel locking straps **42** are constructed so as to place gentle compression forces around the periphery of the foot **6** of a wearer. As such, the compression forces may be accomplished in the variety of arrangements. The strap members **44** may be embodied by narrow bands of material. In one arrangement, the individual strap members **44** and the heel locking strap **42** may be formed with a single elastic material that stretches. In another arrangement, the strap members **44** and heel locking strap **42** may be formed with an adjustability feature having a two piece hook and loop system, similar to VELCRO® fastening system. In yet another arrangement, the strap members **44** and heel locking strap **42** may be formed with a two-piece system having an adjustable buckle with holes in a receiving strap.

FIG. **3A** illustrates a cross-section of the shoe **2** taken along lines **3A—3A** of the embodiment of FIG. **1** extending through a frame member **22**. The cross-sectional view shows the relative position of the foot **6** of the wearer in the shoe **2** at the frame member **22**. The shroud **38** is forced or tensioned away from the foot **6** by the frame members **22**. The air gap **4** is formed between the shroud **38** and the foot **6**. The sockliner **13** is at the bottom of the foot **6** of the wearer and footbed **15** is disposed the same. The frame members **22** have the lateral ends **24** and medial ends **26** fastened into the sole **10**.

FIG. **3B** illustrates a cross-section of shoe **2** taken along line **3B—3B** of the embodiment of FIG. **1**. This shows the relative disposition of the foot **6** at the strap member **44**. The strap member **44** pulls a portion of the shroud **38** to contact the foot **6**. The sockliner **13** is disposed similarly as shown in FIG. **3A**.

In the embodiments shown in FIGS. **1–6**, the rearfoot portion of the shoe **2** has at least two frame members **22** extending rearward from the quarter to the heel area. As such, the frame members **22** at the rear are in a diagonal arrangement.

lululemon Ex. 1010
IPR Petition - USP 9,730,484

To assist in developing the tent-like arrangement of the shoe **2**, the shroud **38** preferably behaves in an elastic manner to enable it to be stretched. This permits the shroud **38** to lengthen to so as to become taut between the frame members **22** and the medial side **16** and lateral side **18** of the upper **30**. To accomplish this, shroud **38** is preferably made from a woven material. The desired elastic behavior may be accomplished by using woven elastic fibers. In a preferred embodiment, the shroud **38** includes woven synthetic elastic fibers chiefly made from polyurethane, e.g., spandex. More specifically, a preferred embodiment is made from LYCRA™ or another spandex fiber. LYCRA™ is a trademark of the DuPont Corporation for its brand of elastane fiber. Shroud **38** may also include other types of fibers to achieve desired characteristics. Accordingly, the woven material of shroud **38** may be comprised of solely spandex or LYCRA™, or combinations of spandex and/or LYCRA™, and other materials such as nylon and/or cotton.

Additionally, these materials may also be constructed of a range of weave and knit patterns to vary the direction and amount of the elasticity of the shroud **38**. In a preferred embodiment, the material is woven to provide equal four-way stretch capabilities, meaning that it stretches equally along all four planar axes. However, if desired, the woven elastic material may be formed so that it stretches more in one direction than another, such as allowing the material to stretch more or less in the vertical direction than the longitudinal direction. That is, it can stretch more or less in the direction from the ball of the foot **6** to the top of the foot, than the direction from the toe to the heel.

The material allows for breathability of the foot **6** so as to provide air to flow and penetrate the shroud **38** thereby conveying air into the interior air gaps **4** of the upper **30** and releasing the air from the interior of the upper **30**. This air flow advantageously cools the foot **6** within the shoe **2** by causing an evaporative effect so as to remove moisture residing on the surface of the foot. Additionally, the material of the shroud **38** may provide protection from ultraviolet radiation. If desired, the shroud **38** may be removable or interchangeable. This removability or interchangeability provides the manufacturer with options to supply the shroud **38** in different visual appearances, breathability ratings, elasticity rating, or textures. Also the wearer is provided with a selective adjustable shroud **38**. For example, a wearer may desire a tented shoe **2** having a high breathable rating for extremely hot weather, but the wearer has a shroud **38** that is rated for cooler weather. The wearer can replace the cooler weather shroud **38** with an extreme hot weather shroud **38**. This interchangeable feature may be accomplished in numerous ways. One such way may be to use mechanical fasteners on the medial side **32** and the lateral side **34** of the upper **30** that is removably connected into the medial side **16** and lateral side **18** of the sole **10**. The mechanical fasteners may be conventional snaps having a male part mating with a female receiving part.

FIGS. **4–6** illustrates a schematic embodiment of the present invention having the foot engaging system **40** enclosed within the shroud **38**. This embodiment is similar to the embodiment shown in FIG. **1** except that the foot engaging system **40**, such as strap members **44'** are disposed inside the shroud **38**. The strap members **44'** may be discrete elements of predetermined length for retaining the foot **6**. For example, the strap members **44'** may be formed of elastic bands that act to hold the foot **6** and the sole **10** together. The foot **6** of the wearer is enclosed so that the tented or tent-like structure provides protection and substantial air ventilation to the foot **6**.

FIG. **5** illustrates another arrangement of the foot engaging system **40** useable with the shoe of FIG. **4** embodying an inner stretchable foot holding frame or an inner bootie system **46**. The inner bootie system **46** is generally a unitary body in which the forefoot portion includes a skeletal like structure of narrow bands **54** and **56** to hold the foot **6**. In one arrangement, the skeletal structure includes a longitudinal top band **54**, transverse strap elements **56**. The strap elements **56** substantially extend from the medial side **16** to the lateral side **18** of the shoe **2**. The lower opposing ends **57** of the strap elements **56** are attached to a respective lower strap element **60**. The lower strap element **60** is a narrow band of material disposed around the outer periphery of at least the side of the sole **10**. Each lower strap element **60** connects the inner bootie system **46** to the sole **10** of the shoe **2** on either the medial side **16** and lateral side **18**. The lower strap element **60** is fastened to the sole **10** in any conventional manner such as stitching, or gluing, or other well-known fastening techniques. The longitudinal top band **54** engages the top portion of the foot **6**.

The inner bootie system further includes a plurality of holes or air vents **58**. The vents **58** are large openings within the inner bootie **46** that allows air to flow and contact the surface the foot **6** of the wearer so as to ventilate the foot **6**. The vents **58** are interposed between the strap elements **56** in which the vents **58** have an outer periphery formed of the strap elements **56**, the longitudinal top band **54**, and the lower strap element **60**.

The rear of the inner bootie system **46** includes a heel strap **63**. The heel strap **63** wraps around the Achilles portion of the heel of the foot **6** extending from the medial side **16** and the lateral side **18**. The rear of the inner bootie system **46** further includes a foot opening **50** to receive the foot **6** of the wearer. Optionally, a front pull tab **52** may be provided. The front pull tab **52** is connected to the rear of the longitudinal top band **54**. If desired, the heel strap **63** may be replaced an enclosed heel portion (not shown) extending from the top of the sole **10** and counter (not shown) to provide extra support for the foot.

The inner bootie system **46** components may be constructed from narrow bands of lightweight resilient material. The purpose of using the material is to provide the foot engaging system **40** with gentle compression forces to secure the foot **6** to the sole **10**. In one arrangement, the material may be a single layer of a woven open mesh material. A material for accomplishing this may include a permeable synthetic mesh material formed from a nylon or polyester double needle bar rachel construction, such as a spacer mesh. One manufacturer of such a material is Dae Woo of Korea. In another arrangement, the material may be formed of multiple layers, such as a three layer sandwich arrangement having an exterior layer, a middle layer, and an interior layer. The exterior layer may be a woven open mesh material as described above. The middle layer may include an open cell foam material, such as polyurethane or latex, typically used in shoe construction. The interior layer may be an inner lining material. The middle cushioning layer is preferably used in the heel region. Another feasible material is a synthetic material of plastic having a weave pattern that lengthens along its longitudinal axis but shortens in the transverse direction to its longitudinal axis when the material is stretched. This may be used alone or in combination with the arrangements described above. The materials used for bands of material preferably have breathability and allow moisture to dissipate therethrough.

If desired, the inner bootie system **46** may have added fastening capability. The strap members **44** such as shown in

lululemon Ex. 1010
IPR Petition - USP 9,730,484

FIG. **1** or **4** may be aligned with the strap elements **56**. The lower ends of the strap members **44** are attached to the sole **10** of the shoe **2** and if desired, a middle portion of the strap members **44** may be connected to the longitudinal top band **54**. This dual arrangement of the inner bootie system **56** and strap members **44** is advantageous to provide additional retaining force of the foot **6**.

FIG. **6** is a cross-sectional view of the embodiment of FIG. **4** taken along line **6**—**6**. An air gap **4'** is formed between the shroud **38** and the foot **6**. The frame members **22'** are holding the shroud **38** away from the foot **6** in a similar manner as shown in FIG. **1**. The strap members **44'** or **56** engage the foot **6** of the wearer. The air gap **4'** provide the wearer with substantial ventilation in which air travels through the shroud **38**. It is appreciated that the air gap **4'** extends around the entire upper periphery of the foot **6** located within the shroud **38**. The protection function of the shroud **38** is separated from the holding function of the lightweight strap members **44'** which are the main portions of the shoe **2** contacting the foot. Thus, the wearer is provided with a substantially barefoot arrangement in which the shoe acts like an extension of the foot **6** and is protected by the shroud **38**.

With reference to FIGS. **7** and **8**, a further embodiment of the present invention is shown. An article of footwear, such as a shoe **2'**, can include a foot bootie system **46'** partially exposed due to a rearfoot section **62**. This embodiment is similar to the embodiment shown in FIG. **4** except the shroud **38** covers the entire forefoot portion of the shoe **2'** and not the rearfoot portion. The shoe **2'** further includes a sole **10** having an outsole **12** and a midsole **14**. The foot bootie system **46'** is attached to the sole **10**. The shoe **2** includes a shroud **38** with frame members **22** covering the forefoot region of the foot, i.e. partially covering the foot **6** of the wearer. The forefoot region of the bootie system **46'** is located within the interior of the tented or tent-like structure created by the shroud **38** and frame members **22**. FIG. **7** shows the frame members **22** disposed interior of the shroud **38** and coupled to the shroud **38** by adhesive bonding. Thus, the exterior surface of the shroud **38** may have ridges formed by the frame members **22** pushing the shroud **38** outward. It is noted that the frame members **22** may alternatively be coupled to the shroud **38** by other methods such as spaced loops **36** located on the interior or exterior of the shoe **2'** as shown in the embodiment of FIGS. **1** and **4**.

Similarly, as with the other embodiments, the embodiment of shoe **2'** and the frame members **22** forces the shroud **38** away from the foot **6** of the wearer, thus forming the tent-like structure protecting the foot **6** from debris and other objects that may injure the foot **6**. Referring to FIG. **8**, the foot bootie system **46'** is similar to the embodiment of the foot engaging system **40** shown in FIG. **5**. The forefoot portion of the bootie **46'** includes a structure of material similar to inner bootie **46**. The rearfoot portion of bootie **46'** is similar to inner bootie **46**, except heel strap **42** has been eliminated. The bootie **46'** has a similar function to ventilate the foot **6** or inner bootie **46** cooperation with the shroud **38** in the embodiment of FIG. **4**.

Referring to the rearfoot portion of the foot bootie system **46'**, a rearfoot section **62** includes a heel section **64** and an ankle collar **74**. The rearfoot section **62** includes the foot opening **50** to receive the foot **6** of the wearer. The rearfoot section **62** substantially encloses the rear of the foot. The enclosed heel section **64** wraps around the heel of the foot **6** extending from the medial side **16** and the lateral side **18**. The ankle collar **74** is disposed at the top portion of the rearfoot section **62** and provides comfortable contact surface to the Achilles tendon area of the foot **6** of a wearer. Optionally, the rearfoot section **62** may include a rear pull tab **72**. A front pull tab **52** may be provided at the front of opening **50**. If desired, the heel section **64** can include a counter **66** to provide extra support for the foot.

The counter **66** is a stiffened portion of foot bootie system **46'** disposed within the heel section **64**, and is preferably made from plastic, or a similar material. The counter **66** extends upwardly from the top surface of sole **10** and includes a lower portion **68**. The lower portion **68** is proximate to the top surface of sole **10** and further secures the base of a foot **6** by resisting medial and lateral motion of the foot **6** of the wearer. The counter **66** supports the heel and Achilles tendon area of the foot **6** of a wearer. The counter **66** may be varied in many ways to optimize support and minimize weight depending upon the type of activity. For instance, it may be beneficial for running shoes to include the additional stiffness provided by a counter to reduce pronation of the foot. If desired, the embodiment of FIGS. **1–3** can be modified so that the shroud **38** and foot holding system **40** cover the forefoot region only, similar to the embodiment depicted in FIG. **7**.

The present invention has been described in terms of preferred and exemplary embodiments thereof. Accordingly, numerous other embodiments, modifications and variations within the scope and spirit of the appended claims will occur to persons of ordinary skill in the art from a review of this disclosure.

We claim:

1. An article of footwear comprising:

a sole;

a shroud for covering at least a forefoot portion of a foot of a user;

a foot engaging system for holding the foot of the user to the sole, the foot engaging system including a plurality of straps, the plurality of straps having a strap extending around a rearfoot portion of the article of footwear; and

a frame member spaced from the foot engaging system, the frame member biasing the shroud away from the foot of the user, wherein the plurality of straps are disposed on an external surface of the shroud.

2. An article of footwear comprising:

a sole;

a shroud for covering at least a forefoot portion of a foot of a user;

a foot engaging system for holding the foot of the user to the sole, the foot engaging system including a plurality of straps, the plurality of straps having a strap extending around a rearfoot portion of the article of footwear; and

a frame member spaced from the foot engaging system, the frame member biasing the shroud away from the foot of the user, wherein the plurality of straps are disposed inside the shroud.

3. An article of footwear comprising:

a sole;

a shroud for covering at least a forefoot portion of a foot of a user;

a foot engaging system for holding the foot of the user to the sole;

a frame member spaced from the foot engaging system, the frame member biasing the shroud away from the foot of the user; and

a plurality of transverse strap members and a plurality of transverse frame members wherein each strap is disposed between adjacent transverse frame members.

lululemon Ex. 1010
IPR Petition - USP 9,730,484

4. The article of footwear of claim 3, wherein the straps are located on an exterior surface of the shroud.

5. An article of footwear comprising:

a sole having a medial and a lateral side;

a shroud for protecting a foot of a user from debris, the shroud having a foot opening;

at least one frame element extending from the medial side to the lateral side for holding the shroud away from the foot of the user; and

a foot fastening system including an inner bootie.

6. The article of footwear of claim 5, wherein a portion of the shroud covers an entire forefoot portion of the foot of the wearer.

7. The article of footwear of claim 5, wherein the inner bootie includes a heel counter.

8. An article of footwear comprising:

a sole having a medial and a lateral side;

a shroud for protecting a foot of a user from debris, the shroud having a foot opening;

a plurality of frame elements extending from the medial side to the lateral side for holding the shroud away from the foot of the user; and

a foot fastening system including a plurality of straps; wherein at least one strap is interposed between at least two frame elements.

9. An article of footwear comprising:

a sole having a medial and a lateral side;

a shroud for protecting a foot of a user from debris, the shroud having a foot opening;

at least one frame element extending from the medial side to the lateral side for holding the shroud away from the foot of the user; and

a foot fastening system including a plurality of straps, wherein the straps are disposed on an external surface of the shroud.

10. An article of footwear comprising:

a sole having a medial and a lateral side;

a shroud for protecting a foot of a user from debris, the shroud having a foot opening;

at least one frame element extending from the medial side to the lateral side for holding the shroud away from the foot of the user; and

a foot fastening system including a plurality of straps, wherein the straps are disposed inside the shroud.

11. An article of footwear comprising:

a sole having a medial and a lateral side;

a shroud for protecting a foot of a user from debris, the shroud having a foot opening; and

at least one frame element extending from the medial side to the lateral side for holding the shroud away from the foot of the user; the shroud including a coupling system for the at least one frame element, wherein the coupling system includes a plurality of loops.

12. An article of footwear comprising:

a sole having a medial and a lateral side;

a shroud for protecting a foot of a user from debris, the shroud having a foot opening; and

at least one frame element extending from the medial side to the lateral side for holding the shroud away from the foot of the user; the shroud including a coupling system for the at least one frame element, wherein the coupling system includes sleeves.

13. An article of footwear comprising:

a sole;

a tented shroud, including a shroud and a frame member attached to the sole; and

a foot holding system for holding a foot of a user to the sole; wherein the foot holding system is disposed within the tented shroud.

14. An article of footwear comprising:

a sole;

a foot holding system for holding a foot of a user to the sole; and

a tented shroud including, a shroud and a frame member attached to the sole, wherein the tented shroud includes and an air channel having a triangular cross-section extending from a medial side and a lateral side of the sole.

15. The article of footwear of claim 1, wherein the sole further includes an outsole for providing a ground engaging surface and a midsole, said frame member being attached to said midsole.

16. The article of footwear of claim 15, wherein the frame member further includes a plurality of frame members such that at least one of the straps is located in the forefoot portion of the foot and is interposed between adjacent frame members.

17. The article of footwear of claim 15, wherein the shroud is composed of a material selected from a group comprising: a plurality of elastic fibers, elastane fibers, nylon fibers, and cotton fibers.

18. The article of footwear of claim 2, wherein the straps include a hook and loop system providing adjustability.

19. The article of footwear of claim 2, wherein the sole further includes an outsole for providing a ground engaging surface and a midsole having a plurality of depressions formed for mating with a lateral end and a medial end of the frame member, the frame member being attached to the midsole in the depressions.

20. The article of footwear of claim 5, wherein the shroud is composed of a woven material selected from a group comprising: a plurality of elastic fibers, elastane fibers, nylon fibers, and cotton fibers; and wherein the at least one frame element is composed of a frame material selected from a group comprising: a plastic, an elastomer, a polymer composite, and a fiber reinforced plastic.

21. The article of footwear of claim 5, wherein the inner bootie includes a mesh material.

22. The article of footwear of claim 5, wherein the inner bootie includes a first layer composed of a mesh material, and a second layer composed of a foam material.

23. The article of footwear of claim 5, wherein the sole further includes an outsole and a midsole, wherein the at least one frame element mates with the midsole on the medial side and the lateral side of the sole.

24. The article of footwear of claim 5, wherein the at least one frame element further includes a plurality of frame elements located in a forefoot portion of the shroud.

25. The article of footwear of claim 8, wherein the shroud is composed of a material having at least one of: a plurality of elastic fibers, elastane fibers, nylon fibers, and cotton fibers.

26. The article of footwear of claim 8, wherein the plurality of straps extend from the medial side to the lateral side of the sole and the straps are disposed inside of the shroud.

27. The article of footwear of claim 11, wherein the sole further includes a midsole in which the at least one frame

lululemon Ex. 1010
IPR Petition - USP 9,730,484

element is connected to the medial side and lateral side by way of a pathway formed by the plurality of loops.

28. The article of footwear of claim **27**, wherein the plurality of loops are disposed on at least one of an interior surface of the shroud and an exterior surface of the shroud.

29. The article of footwear of claim **12**, wherein the shroud is composed of a material having at least one of: a plurality of elastic fibers, elastane fibers, nylon fibers, and cotton fibers.

30. The article of footwear of claim **13**, wherein the shroud is composed of a woven material selected from a group comprising: a plurality of elastic fibers, elastane fibers, and nylon fibers; and wherein the frame member is composed of a frame material selected from a group comprising: a plastic, an elastomer, a polymer composite, and a fiber reinforced plastic.

31. The article of footwear of claim **13**, wherein the foot holding system further includes a foot bootie being composed of a woven mesh material.

32. The article of footwear of claim **31**, wherein the foot bootie includes a stiffened rearfoot portion for engaging a heel of the foot of the user.

33. The article of footwear of claim **13**, wherein the foot holding system further includes a plurality of transverse strap members and a plurality of transverse frame members each strap is disposed between a pair of transverse frame members; and wherein the sole further comprises a midsole such the transverse frame members are attached thereto.

34. The article of footwear of the claim **13**, wherein the frame member includes a tenting resistance in the range of 0.20 to 2.5 newtons per millimeter.

35. The article of footwear of claim **14**, wherein the shroud is composed of an elastic material.

* * * * *

UNITED STATES PATENT AND TRADEMARK OFFICE

CERTIFICATE OF CORRECTION

PATENT NO. : 6,367,168 B1
DATED : April 9, 2002
INVENTOR(S) : Tinker L. Hatfield et al.

It is certified that error appears in the above-identified patent and that said Letters Patent is hereby corrected as shown below:

Column 11,
Lines 28-37, claim 9 has been cancelled

Signed and Sealed this

Eighth Day of October, 2002

Attest:

Attesting Officer

JAMES E. ROGAN
Director of the United States Patent and Trademark Office