Trials@uspto.gov
571-272-7822

Paper 36
Date: March 21, 2025

UNITED STATES PATENT AND TRADEMARK OFFICE

BEFORE THE PATENT TRIAL AND APPEAL BOARD

LULULEMON USA INC.,
Petitioner,

v.

NIKE, INC.,
Patent Owner.

IPR2023-01460
Patent 9,730,484 B2

Before JOSIAH C. COCKS, CARL M. DEFRANCO, and GEORGE R. HOSKINS, *Administrative Patent Judges*.

DEFRANCO, *Administrative Patent Judge*.

JUDGMENT
Final Written Decision
Determining All Challenged Claims Unpatentable
35 U.S.C. § 318(a)

Nike, Inc. ("Nike") is the owner of U.S. Patent No. 9,730,484 B2 (Ex. 1001, "the '484 patent"). lululemon usa inc. ("lululemon") filed a Petition requesting *inter partes* review of claims 1–19 of the '484 patent. Paper 1 ("Pet."). We instituted *inter partes* review of all the claims as challenged in the petition. Paper 9 ("Inst. Dec."). Nike, in due course, filed a patent owner response to the petition. Paper 19 ("PO Resp."). lululemon followed with a reply. Paper 22 ("Pet. Reply"). And Nike followed with a sur-reply. Paper 23 ("PO Sur-Reply").

We have jurisdiction over this *inter partes* review under 35 U.S.C. § 6. We held an oral hearing on December 16, 2024, a transcript of which is in the record. Paper 31 ("Hrg. Tr."). This Final Written Decision is entered pursuant to 35 U.S.C. § 318(a). For the reasons below, we determine that lululemon has shown, by a preponderance of the evidence, that challenged claims 1–19 are unpatentable.

I. BACKGROUND

A. Related Matters

The '484 patent is the subject of several parallel district court actions: *Nike, Inc. v. lululemon usa inc.*, No. 1:23-cv-00771 (S.D.N.Y.); *Nike, Inc. v. New Balance Athletics, Inc.*, No. 1:23-cv-12666 (D. Mass.); and *Nike, Inc. v. Skechers U.S.A., Inc.*, No. 2:23-cv-09346 (C.D. Cal.). *See* Paper 6, 2. The '484 patent is also the subject of another Board proceeding, IPR2025-00142, where the patent owner preliminary response was only recently filed.

B. The '484 Patent

The '484 Patent is directed to a footwear "upper" that "includes a knitted element formed from at least one mechanically manipulated yarn" in a "flat knitting process." Ex. 1001, 3:10–29, 4:28–32. The "[f]lat knitted

element . . . can be formed directly in desired three dimensional shapes," which provides the benefits of reducing costs, increasing flexibility, and eliminating seams and sewing. *Id.* at 4:49–60; *see also id.* at 7:56–57 ("the flat knitting process may be utilized to form generally three-dimensional structures"). "By selectively placing multiple different yarns and/or stitch patterns at multiple different locations in the overall structure during the knitting process, flat knitted products may have multiple different physical properties . . . at multiple different locations or zones within a single unitary construction . . ." *Id.* at 4:60–5:1.

Figure 10A of the '484 Patent, reproduced below, shows an embodiment of the upper having a knitted element with a "three-dimensional structure formed through a flat knitting process." *Id.* at 10:18–20.

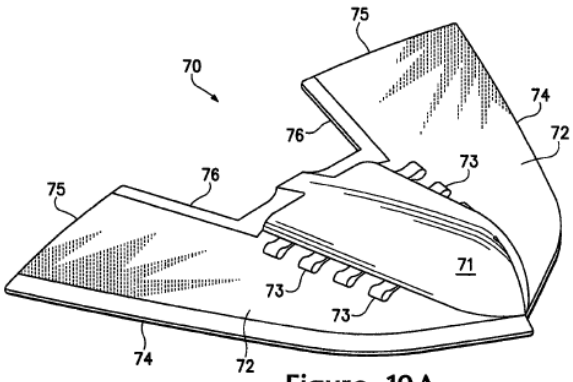

Figure 10A

As shown, upper 70 includes "a central portion 71" and "a pair of side portions 72." *Id.* at 10:20–21. "[S]ide portions 72 are relatively flat," while "central portion 71 has a domed shape formed through the flat knitting process." *Id.* at 10:34–36. "When assembled into an article of footwear, central portion 71 extends over the foot, and side portions 72 wrap under the foot." *Id.* at 10:23–25.

C. The Challenged Claims

Of the challenged claims, claims 1, 10, and 11 are independent. Claim 1, reproduced below, is illustrative of the claimed subject matter:

> 1. An article of footwear comprising *an upper including a flat-knitted element formed* from at least one yarn mechanically manipulated *in a flat-knitting process*, the flat-knitted element including a first layer having:
>
> a central portion having *a domed, three-dimensional structure* configured for extending over the top of a foot;
>
> a first side portion being formed of unitary construction with the central portion and extending from a first side of the central portion; and
>
> a second side portion being formed of unitary construction with the central portion and extending from a second side opposite the first side of the central portion,
>
> *the domed, three-dimensional structure shaped to extend above the plane* of the first side portion and the second side portion when the flat-knitted element is in a flattened configuration.

Ex. 1001, 13:6–22 (emphasis added for contested limitations; line breaks added to first and last limitations for clarification).

Independent claim 11 is directed to a "method of manufacturing an article of footwear" and recites essentially the same limitations as claim 1. *Id.* at 14:11–28. Independent claim 10 recites limitations similar to those of claims 1 and 11, but adds that the flat-knitted element includes "a first layer and a second layer" with "the second layer being flat-knitted with the first layer at opposite ends of the second layer to form an *overlapped loop*." *Id.* at 13:49–14:10 (emphasis added). Dependent claims 2 and 18 recite similar "loop" limitations. *Id.* at 13:23–25, 14:51–53.

D. The Asserted Grounds

Grounds	Claims Challenged	35 U.S.C. §	Basis
1	1, 5–9	103	Lockwood,[1] Dua[2]
2	1, 5–9	103	Lockwood, Dua, Norton[3]
3	1–19	103	Dua, Hong,[4] Lockwood
4	2, 4, 18, 19	103	Dua, Hong, Lockwood, Voughlohn[5]

II. ANALYSIS

A. Level of Ordinary Skill in the Art

lululemon proposes, and Nike does not dispute, that one skilled in the art would have had "at least a bachelor's degree in mechanical engineering, textile engineering, or similar technical degree and at least 3 years of experience working with knitted textiles for use in fabric-based articles, including apparel such as footwear." Pet. 12–13 (citing Ex. 1003 ¶¶ 43–45); *see also* PO Resp. 13 ("Nike applies lululemon's proposed level of skill in the art."). There being no dispute, we adopt lululemon's definition of the level of skill in the art.

B. Claim Construction

lululemon asserts that "the plain and unambiguous language of the claim[s] requires that the flat-knitted element having the claimed features must be formed from a flat-knitting process." Pet. 13–14. Nike agrees, and

[1] US 3,641,603, issued Feb. 15, 1972 (Ex. 1003, "Lockwood").
[2] US 2005/0193592 A1, published Sep. 8, 2005 (Ex. 1004, "Dua").
[3] US 6,558,784 B1, issued May 6, 2003 (Ex. 1011, "Norton").
[4] H. Hong, *The development of 3D shaped knitted fabrics for technical purposes on a flat knitting machine*, INDIAN JOURNAL OF FIBRE & TEXTILE RESEARCH, VOL. 19, PGS. 189–194 (Sep. 1994) (Ex. 1005, "Hong").
[5] US 2006/0053658 A1, published Mar. 16, 2006 (Ex. 1006, "Voughlohn").

notes that our Institution Decision adopted that construction, i.e., "that the 'domed, three dimensional structure' of the 'flat-knitted element,' recited in claims 1, 10, and 11, is formed 'during the flat-knitting process.'" PO Resp. 12 (quoting Inst. Dec. 6). Thus, the parties make clear that the claims do not encompass forming the claimed "three-dimensional structure" *after* the flat-knitting process is complete. Thus, we maintain the construction in our Institution Decision that the claimed "central portion having a domed, three-dimensional structure" must be formed during the flat-knitting process, and not afterward.

C. Grounds 1 and 2

Given the agreed-upon construction from our Institution Decision, lululemon no longer asserts grounds 1 and 2 against claims 1 and 5–9. *See* Pet. Reply 3 ("Petitioner will refrain from further arguing Grounds 1–2"); *see also* Hr. Tr. 5:15–6:5 ("[G]rounds 1 and 2 have been dropped. . . . We are withdrawing those two grounds."). As such, we need not reach those grounds and proceed to lululemon's additional grounds.

D. Ground 3 (Obviousness over Dua, Hong, and Lockwood)

lululemon challenges claims 1–19 as obvious over the combined teachings of Dua, Hong, and Lockwood. *See* Pet. 19–36. For this challenge, the parties argue independent claims 1 and 11 together, while separately arguing independent claim 10 and dependent claims 2 and 18 as a group. *See* Pet. 44–55, 67–69 (claims 1 and 11), 64–66 (claim 10); PO Resp. 20–30 (claims 1 and 11); 30–36 (claims 2, 10, and 18). As discussed above, claims 1 and 11 recite essentially the same elements, while claims 2, 10, and 18 add that the flat-knitted element includes a "loop." We begin with the arguments aimed at independent claims 1 and 11.

1. *Independent Claims 1 and 11*

lululemon relies on Dua for teaching each element of claims 1 and 11 "except for the central portion having a domed, three-dimensional structure" (i.e., element 1[b]). Pet. 41. For that missing element, lululemon points to Hong and Lockwood. *Id.* at 41–44, 46–51, 68. According to lululemon, "Hong discloses flat knitting three-dimensional structures, including domed, three-dimensional structures," while "Lockwood . . . discloses an upper with a domed, three dimensional structure in the claimed location." *Id.* at 41 (citing Ex. 1002 ¶ 92); *see also id.* at 47–51 (citing Ex. 1003, Abstract, 1:60–64, 2:18–62, 6:40–45, 7:21–37, Fig. 35; Ex. 1005, 1, 5).

Noting that "[a]ll three references are directed to manufacturing textile articles with knitted elements, such as clothing or footwear" and that "both Lockwood and Dua are directed to manufacturing uppers for shoes, including uppers that include knitted elements," lululemon contends that one skilled in the art would have been led to modify Dua's upper to include a flat-knitted, three-dimensional structure, as taught by Lockwood and Hong, because it would simplify assembly of the upper and reduce necessary cutting and waste of expensive materials. *Id.* at 41–51 (citing Ex. 1002 ¶¶ 92–95; Ex. 1003, 1:60–64, 6:40–45, 7:21–37; Ex. 1005, 1, 5).

Nike responds with essentially three arguments in dispute of lululemon's showing for claims 1 and 11. *See* PO Resp. 20–30. Nike argues, *first*, that Hong fails to teach or suggest "a 'domed, three-dimensional structure' formed *during* a flat-knitting process" (*id.* at 21–27), *second*, that one skilled in the art would not have reasonably expected to do so (*id.* at 28–29), and, *third,* that Hong fails to teach or suggest forming a

three-dimensional structure that extends above the plane of the side portions of the flat-knitted element (*id.* at 29–30). We address each argument in turn.

a. forming a three-dimensional structure during the flat knitting process

Contrasting claim 1 and 11's requirement of forming a three-dimensional structure *during* a flat knitting process, Nike argues that "[t]he cited disclosures in Hong merely describe flat knitting precisely-shaped, *two-dimensional* patterns—that *can later be formed* into three-dimensional structures." PO Resp. 20–21 (emphases added). According to Nike, "[i]t simply wasn't possible in 1994 or 2006 for a flat-knitting machine to output a three-dimensional 'Knitted Fabric' as shown in Figures 3(3)–9(3)" of Hong. *Id.* at 21 (citing Ex. 2003 ¶¶ 49–51). Instead, relying on the opinion of its expert, Nike contends the "Knitted Fabric[s]" depicted in Hong's Figures 3(3)–9(3) "would have required post-knitting processing to reach their final 'as shown' form" because "it would not have been possible to join together the [left and right] edges" of the 2D patterns shown in Hong's Figures 3(2)–9(2) "*during* the knitting process" and they "could only be joined by seaming the edges together *after* the knitting process." *Id.* at 23 (citing Ex. 2003 ¶¶ 49, 51; Ex. 1005, Figs. 3–9).

In other words, according to Nike, Hong produces these three-dimensional fabrics in three steps:

> (1) conceiving of a "theoretical" three-dimensional object;
>
> (2) flat knitting a knit-to-shape, "two-dimensional pattern," and
>
> (3) later forming that two-dimensional pattern piece into a three-dimensional structure.

Id. at 21–22 (citing Ex. 1005, at 3). With that in mind, Nike surmises that "Hong's three-dimensional fabrics are certainly 'knitted,' but they only

assume a three-dimensional shape *after* the knitting process is complete." *Id.* at 22. We disagree.

Nike and its expert mischaracterize Hong. After close review of the opinions of both parties' experts, we credit the opinion of lululemon's expert as more consistent with Hong's disclosure than that of Nike's expert. In particular, lululemon's expert points to Hong's unmistakable and explicit disclosure that "*knitting directly the 3D shapes* can overcome fabric waste and diminish the labour cost inherent to the use of two-dimensional fabrics." Ex. 1002 ¶ 91 (quoting Ex. 1005, 5) (emphasis added). That disclosure by Hong of "knitting directly" the 3D shape clearly suggests it is formed as part of Hong's flat-knitting process, and not as part of some post-knit seaming process. Hong's additional disclosure of "diminish[ing] the labour cost inherent to the use of two-dimensional fabrics" also cuts against Nike's notion of an additional step of "forming that two-dimensional pattern piece into a three-dimensional structure" following the flat knitting step. *See* PO Resp. 21–22.

Indeed, the entire premise of Hong is "[t]he use of a new electronic flat knitting machine (Shima Seiki SES 122FF) *for producing three-dimensional shaped fabrics*." Ex. 1005, at 1, Abstract (emphasis added). More specifically, Hong discloses that the SES 122FF machine "is one of the new generation of computer-controlled flat knitting machines," whose main feature "enables *the knitting of* fancy stitches and knit to shape" and whose major advantage "is that it has overcome former restrictions in knitting design and shaping, thus enabling the development of *3D knitted structures*." *Id.* at 1–2 (emphases added). Consistent with those disclosures,

lululemon's expert repeatedly confirms, under cross-examination, that Hong is all about making a three-dimensional shape during the knitting process—

> Q [by Nike counsel] I want you to point me to somewhere in Hong where it explains the formation of a three-dimensional structure explicitly during the knitting process.
> A [by lululemon's expert] The whole paper.
> Q Show me one example where it explicitly discusses forming a three-dimensional object during the knitting process.
> A If you look at [heading] 4 on page 3, it says, "Three-dimensional-shaped knitted fabrics developed on the Shima Seiki machine." *It talks about tubular forms, and it talks about spherical forms.*
> Q Where does that say that the three-dimensional shape is formed during the knitting process and not as part of a post-processing folding and sewing step?
> A Because it says it's developed *on the machine*, not off the machine. . . .
> Q But it doesn't say that it's formed into a three-dimensional structure on the machine.
> A That's what that sentence says: "Develop three-dimensional-shaped knitted fabrics developed *on the Shima Seiki machine*." It doesn't say take them off and make a three-dimensional structure. *It says "on the machine."*
> Q But the fabrics are developed on the Shima Seiki machine, and then they're shaped into a three-dimensional object.
> A That's not what it says.
> Q In your opinion, as you're interpreting it.
> A As I read the sentence. I'll read it one more time. "Three-dimensional-shaped knitted fabrics developed on the Shima Seiki machine."
>
> * * *
>
> Q Where does it say that that three-dimensional shape is formed *on the knitting machine*?
> A In [Hong's heading] 4, three-dimensional -- I keep repeating the sentence. "Three-dimensional-knitted shaped fabrics developed *on the Shima Seiki machine," [and heading] 4.1, tubular forms.*

> Q Yeah. . . . But isn't it possible that he just means you're developing these fabrics using this specific machine. I mean nothing in that sentence says you can't later form it. He's using this machine to develop a certain three dimensional object, but he never says anywhere that it's formed as a three-dimensional object while it's on the machine. It just says he's developing it on the machine. . . .
> A I think you're saying the same thing. The way I read it is, it comes off the machine, and it's three-dimensional.
> Q But it never says during the knitting process, it takes that three-dimensional form nowhere in Hong; right?
> A The whole paper is about -- it makes a three-dimensional shape. The whole paper is about that. What else would it be? That's what the paper's about.
> Q You're assuming?
> A I'm not assuming. *It's the way I read it and a way a POSA*[6] *would read it.*

Ex. 2005, 96:19–98:20, 100:25–102:14 (emphases added).

We find that testimony by lululemon's expert credible and consistent with what Hong actually teaches. Indeed, looking at the heading "4.1 Tubular Forms" that lululemon's expert highlighted in the course of that exchange, Hong expressly says that "[t]he different tubular forms *knitted on* the SES 122FF flat knitting machine are shown in Figs. 3–6." Ex. 1005, at 3 (emphasis added)). That statement by Hong directly refutes the repeated assertions by Nike's counsel's that Hong "never says anywhere that it's formed as a three-dimensional object *while it's on the machine*." Ex. 2005, 101:17–21 (emphasis added). Thus, we agree with lululemon and its expert that one skilled in the art would have understood Hong to be teaching the formation of a three-dimensional fabric during the knitting process while still on the SES 122FF machine.

---

[6] "POSA" is an acronym for person of ordinary skill in the art.

That is what Hong is all about, as lululemon's export repeatedly emphasizes to Nike throughout his testimony. For instance, Hong explains that, "to reach the objective of *knitting a 3D shape*," the new SES 122FF machine implements several techniques—namely, "using different structural combinations," "using different loop lengths," and "altering the number of operating needles from course to course"—*none of which mentions a seaming step for the knitted 3D shape*, as Nike would have us believe. Ex. 1005, at 2. Rather, Hong explicitly states that "[t]he three-dimensional shaped knitted fabrics presented in this work *are all knitted by using this [new] technique*." *Id.* at 3 (emphasis added).

Moreover, Hong identifies in detail the "different *knitted elements*" formed on the new SES 122FF machine as being "tubular forms, spherical forms, box forms, and car seat covers" (*id.* at 1, Abstract) and repeatedly states that the machine's purpose is "to knit" each of those three-dimensional forms—

- "This work describes the use of the new flat knitting machines *to knit 3D structures*." Ex. 1005, 1 (emphasis added).
- "[T]his method is used *to knit three-dimensional structures*." *Id.* at 3 (emphasis added).
- "It is not difficult *to knit a spherical form* in the SES 122FF flat knitting machine." *Id.* at 4 (emphasis added).
- "By exploiting the capacity of this [flat-knitting] machine, it is possible *to knit more types of three-dimensional knitted fabrics*." *Id.* at 6 (emphasis added).

By those disclosures, Hong makes it abundantly clear that the new SES 122FF machine forms the three-dimensional structures *during* the knitting process. Nike does not persuade us otherwise.

To that end, we reject Nike's characterization of the working examples in Hong's figures as involving a "seaming" step. *See* PO Resp. 23–24. According to Nike, all of the "Knitted Fabrics" depicted in Hong's figures are made by "seaming together" the two-dimensional patterns "*after* the knitting process." *See id.* We disagree. Hong expressly correlates the different forms "*knitted on* the SES 122FF flat knitting machine" to the "Knitted Fabric" depicted in Hong's figures. Ex. 1005, at 3 ("The different tubular forms *knitted on* the SES 122FF flat knitting machine are shown in Figs. 3–6." (emphasis added)). That Hong describes the figures as showing the different forms that are "knitted on" the SES 122FF knitting machine indicates to us, as it would to one of ordinary skill in the art, that the "Knitted Fabric" depicted in Hong's figures results from the knitting process, not from a post-knit seaming process.[7]

And to the extent Nike suggests that lululemon's expert considered only *one* of Hong's working examples because the others supposedly taught "seaming together" the two-dimensional pattern, we are not persuaded. *See* PO Resp. 24 (citing Ex. 2005, 108:23–109:9). That is because Nike omits a key part of the expert's testimony where he was asked "why" he had not considered Hong's other figures. *See id.* (quoting only lululemon's expert testimony *up to* "109:9"). More accurately, as lululemon's expert *repeatedly* explained, he focused on that one example, i.e., Hong's Figure 7, because

[7] To the extent Nike argues that Hong's Figure 3(3) "Knitted Fabric" shows "seams," we note that, aside from their own annotations, neither Nike nor its expert provides any proof that those so-called "seams" are made as part of a post-knit sewing process as opposed to being knitted seams made during the knitting process. *See* PO Resp. 23–24 (citing Ex. 2005 ¶ 51). In any event, Hong's other figures lack any such "seams." *See* Ex. 1005, Figs. 4–9.

the '484 patent at issue "talks about a dome knitting and dome structure." Ex. 2005, 109:4–18; *see also id.* at 111:2–5 ("As long as [Hong's] figure associated with the curved – the spherical curved item could be, that's all I was concerned about."); 111:12–14 ("Because I was only interested in [Hong's] description of how to make the spherical fabric."). That testimony, conspicuously omitted by Nike, makes clear that lululemon's expert focused on the working example in Hong that most closely matches the "domed, three-dimensional" shape recited in the challenged claims. Thus, we reject Nike's attempt to mischaracterize the lack of consideration of Hong's other working examples by lululemon's expert as somehow indicating he knew they were "assembled by seaming." *See* PO Resp. 24.

Also, we reject Nike's contention that Hong's use of a "two-dimensional *pattern*" in the knitting process necessarily means that the knitting machine is being used "to knit a precisely-shaped, two-dimensional pattern piece" as opposed to a three-dimensional piece. PO Resp. 21–23 (citing Ex. 1005, at 3; Ex. 2003 ¶ 49). Rather, to the extent Hong uses a 2D pattern, it is merely to set the number of needles and courses to be used in the flat-knitting process that produces the actual three-dimensional piece. *See, e.g.*, Ex. 1005, 4 ("it is necessary to start by transferring the three-dimensional concept to a two-dimensional pattern, . . . and then establishing the relation between the number of operating needles and the number of knitted courses."). Nowhere does Hong suggest using the 2D pattern to make a *2D knitted fabric*.

To the extent Nike contends that lululemon's expert "confirmed as much" (i.e., that a two-dimensional structure comes off the machine and only later becomes three-dimensional), we are not persuaded. Once again,

Nike omits a critical portion of the lululemon's expert testimony. PO Resp. 22–23 (citing Ex. 2005, 165:4–20). Immediately following that testimony cited by Nike, lululemon's expert makes clear (on re-direct examination) that the structure that comes off the knitting machine is three-dimensional—

> Q [by lululemon counsel] When you said it comes off the machine, it becomes three-dimensional, were you speaking about a post-processing step? . . .
> A [by lululemon's expert] No. It was all part of the knitting process.

Ex. 2005, 165:21–166:8. Elsewhere, lululemon's expert explains the very reason for Hong's two-dimensional pattern—

> Q [by Nike counsel] What's the purpose of the two-dimensional pattern that's shown here on [Hong's] page 3?
> A [by lululemon's expert] What they're showing is, you have to go back and look at Figure 2. At that point, you're knitting the fabric – it's being knitted on a V bed knitting machine. So you have to give a pattern diagram of how it should be knitted at that time. But when it comes off the machine -- when I say off the machine, I don't mean off and then subsequently processed -- it takes a three-dimensional shape.
> Q How?
> A By the way, this paper says, by using different structural combinations, using different loop lengths, and altering the number of operating needles from course to course.

Id. at 98:21–99:16.

Collectively, that testimony along with other testimony from lululemon's expert shows that one skilled in the art would have understood that Hong's two-dimensional *pattern* is used merely to program the SES 122FF machine's controller, which, in turn, electronically controls the machine's needles "for knitting and shaping" to achieve "the objective of

knitting a 3D shape." Ex. 1005, 1–3; Ex. 2005, 20:22–21:15, 56:6–58:2, 98:21–99:16. Indeed, consistent with that understanding, Hong explains that

> When this method is used to knit three-dimensional structures, . . . the fashioning operation (increasing or decreasing the number of knitting needles) is *only determined according to two-dimensional patterns*. The three-dimensional shaped knitted fabrics presented in this work are *all knitted by using this technique*.

Ex. 1005, at 3 (emphases added); *see also id.* ("The tubular forms are *knitted on both needle beds*. When the number of operating needles in one bed is changed, a 'knee' form is developed." (emphasis added)). In other words, Hong uses the two-dimensional pattern to determine how the SES 122FF machine will operate and control the knitting needles, and once that determination is made, the computer-controlled needles are used to knit the three-dimensional structure *on the machine*.

For all the above reasons, we find that Hong teaches or suggests forming a three-dimensional structure during the knitting process, and not as part of some post-knit seaming process. That finding is consistent with Nike's representation to the European Patent Office during prosecution of the European counterpart of the '484 patent. There, the European examiner rejected the claimed subject matter because "nothing is described nor disclosed nor explained [in the specification] on how a domed three-dimensional knitted element could be manufactured through a flat-knitting process" and "[i]t is clear to any skilled person that the present subject-matter lacks essential information on how such an effect (domed portion) could be achieved. Ex. 1017, 15 ¶ 3. Rather than point to anything in the specification, Nike *pointed to Hong* as evidence it was well-known "that achieving three-dimensional knitted textiles may generally be obtained

through flat knitting." *Id.* at 8 (citing "Hong" in response to "Insufficient support" rejection). That representation by Nike about Hong eventually led to allowance of the European counterpart. *See id.* at 5 ¶ 6 (European Patent Office communication no longer maintaining insufficient support rejection while indicating that "claim 1 appears to be allowable").

Here, however, Nike now takes the opposite position. Nike's attempt to reimagine Hong and distance itself from that prior admission to the European Patent Office appears to us a bit disingenuous. Nike cannot reasonably argue that Hong's disclosure was sufficient to establish enablement of the '484 patent's European counterpart but is somehow now deficient here. Nike's argument here that Hong lacks sufficient disclosure for knitting a three-dimensional structure in a flat-knitting process is undermined by Nike's admission to the European Patent Office that Hong teaches such a three-dimensional knitting process.

b. reasonable expectation of success

Nike argues that one skilled in the art would not have reasonably expected to succeed in knitting the three-dimensional structures depicted in Hong's figures. *See* PO Resp. 28–29. According to Nike, one skilled in the art would have understood that "most of Hong's 'Knitted Fabrics' [as depicted in Hong's Figures 3(3)–9(3)] could not *possibly* be formed during the knitting process" and "could only be shaped into their as-depicted form through the use of post-knitting processing such as folding and sewing." *Id.* at 28 (citing Ex. 2003 ¶¶ 49, 51); *see also id.* at 21 ("It simply *wasn't possible* in 1994 or 2006 for a flat-knitting machine to output a three-dimensional 'Knitted Fabric' as shown in Figures 3(3)–9(3)" (emphasis added)).

The evidence contradicts Nike's contentions of impossibility. As explained above, Nike mischaracterizes Hong's disclosure by repeatedly focusing on one select example in Hong—Figure 3(3)—rather than understanding the full scope of Hong's teachings. By focusing on Hong's Figure 3(3) and the so-called "seams" it purportedly depicts, Nike ignores that the knitted fabrics in Hong's other figures do not depict any seams in the fabric. *See, e.g.*, Ex. 1005, Figs. 7(3)–9(3). Indeed, with respect to the "spherical form" depicted in Figure 7(3), Hong directly rebuts Nike's contention that such a structure was not possible—

> *It is not difficult to knit a spherical form in the SES 122FF flat knitting machine. To knit a spherical form* with a radius *R*, it is necessary to start by transferring the three-dimensional concept to a two-dimensional pattern, as shown in Fig. 7, and then establishing the relation between the number of operating needles and the number of knitted courses as follows:
>
> $$C = \frac{N\sqrt{1-\sin^2(\pi n/N)}}{2aM}$$

Ex. 1005, at 4 ("4.2 Spherical Forms") (emphasis added).

Notably, based on the success of the working examples described therein, Hong concludes that "[b]y exploiting the capacity of this [SES 122FF] machine, *it is possible to knit more types of three-dimensional knitted fabrics*." *Id.* at 6 (emphasis added). And, not only does Hong discuss the specific techniques used by the SES 122FF machine for successfully "knitting directly the 3D shapes," but also emphasizes the advantage of those techniques, such as overcoming fabric waste and diminishing labor cost. *Id.* at 5. Moreover, lululemon's expert corroborates Hong's explanation of the specific techniques used by the SES 122FF machine to successfully knit three-dimensional shapes during the flat-

knitting process, including using different loop lengths and adjusting the number of operating needles from course to course. *See* Ex. 2005, 65:8–70:10; Ex. 1002 ¶ 89.

Thus, we reject the notion that one skilled in the art would not have viewed Hong as reasonably "succeeding in forming a three-dimensional structure *during* the knitting process," as Nike contends. PO Resp. 28. Rather, together, the express disclosures of Hong and the testimony of lululemon's expert underscore the feasibility of flat knitting a three-dimensional spherical structure that would result from the combined teachings of Dua, Hong, and Lockwood. *See* Ex. 1002 ¶¶ 92–95.

c. forming a three-dimensional structure "to extend above the plane" of first and second side portions

Nike argues that Hong fails to disclose "forming a flat-knitted element with a three-dimensional structure that 'extend[s] above the plane' of the 'side portion[s]' that are in a 'flattened configuration,'" as recited by claims 1 and 11. PO Resp. 29. According to Nike, Hong only describes "closed-periphery three-dimensional structures . . . lacking any flattened portions." *Id*. This argument disregards the testimony of lululemon's expert, who credibly and reliably testifies that one skilled in the art would have understood Hong as enabling the integration of both two-dimensional and three dimensional elements within the same knitted structure, meaning it teaches knitting of a three-dimensional structure which extends above the plane of flat two-dimensional flat portion. *See* Ex. 2005, 115:15–116:25 (confirming that Hong's SES 122FF machine would not only allow you to make three-dimensional knit-to-shape elements but "would allow you to do two-dimensional too").

Moreover, Nike's argument neglects that the asserted combination also relies on the teachings of Dua and Lockwood. *See* Pet. 39–55. When Hong is considered in combination with Dua and Lockwood, their collective teachings support the feasibility and desirability of constructing a flat-knitted element with a domed, three-dimensional element. In particular, Lockwood teaches a three-dimensional structure shaped to extend above the plane of side portions. *See* Ex. 1003, Fig. 35; Ex. 1002 ¶¶ 93, 95. One skilled in the art would have been motivated to include such a domed, three-dimensional structure in the central portion of a shoe upper like Dua's to "simplify[] the assembly of uppers by a technique of pre-shaping the upper forepart component," as taught by Lockwood. Ex. 1003, 1:60–64; Ex. 1002 ¶¶ 92–95. And one of ordinary skill in the art would have been motivated to use a flat knitting process, like that described in Hong, to flat knit a domed, three dimensional structure in an upper like Dua's. Ex. 1002 ¶¶ 92–95.

Thus, we reject Nike's contention that the asserted combination would not have resulted in a three-dimensional structure that "extend[s] above the plane" of the "flattened configuration" of the side portion, as recited in claims 1 and 11.

d. Conclusion

For all the above reasons, we find that the combination of Dua, Hong, and Lockwood teaches or suggests an article of footwear having "a domed, three-dimensional structure" that is formed *during* "a flat-knitting process" and "shaped to extend above the plane" of "flattened" side portions, as recited in claims 1 and 11. We also find that one skilled in the art would have a reasonable expectation of succeeding in forming an article of

footwear having such a domed, three-dimensional structure as a result of combining the teachings of Dua, Hong, and Lockwood.

And, because Nike does not otherwise contest that one skilled in the art would have had sufficient reason to combine the teachings of Dua, Hong, and Lockwood or that such combination discloses the remaining elements of claims 1 and 11, we need not further address those uncontested elements. *See In re NuVasive, Inc.*, 841 F.3d 966, 974 (Fed. Cir. 2016) ("The Board, having found the only disputed limitations together in one reference, was not required to address undisputed matters."). Thus, we conclude that lululemon demonstrates, by a preponderance of the evidence, that claims 1 and 11 are unpatentable as obvious over the combined teachings of Dua, Hong, and Lockwood.

2. *Independent Claim 10 (and Dependent Claims 2 and 18)*

Claim 10 recites limitations similar to those of claims 1 and 11, while adding that the flat-knitted element includes "a first layer and a second layer" with "the second layer being flat-knitted with the first layer at opposite ends of the second layer *to form an overlapped loop*." Ex. 1001, 13:49–14:10 (emphasis added). Claims 2 and 18, which depend from claims 1 and 11, likewise recite a "loop" formed from the unitary construction of two layers.

lululemon challenges claims 2, 10, and 18 as being obvious over Dua, Hong, and Lockwood. *See* Pet. 55–57, 64–66, 73. For those claims, lululemon relies on Dua's Figure 13, reproduced below, which lululemon's expert annotates to illustrate an upper 230 for an article of footwear where loops for laces "are formed as a second layer of unitary construction with the

first layer" of the upper. *Id.* at 56–57 (citing Ex. 1004, Fig. 13; Ex. 1002 ¶ 111).

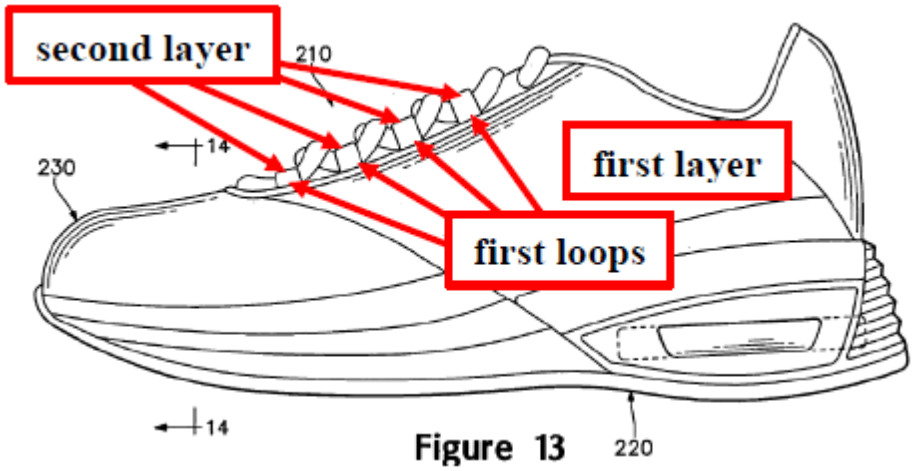

Figure 13

In conjunction with Figure 13, Dua discloses that upper 230 includes "textile element 240," which "is a single element of textile that forms the interior layer of upper 230," and also includes intermediate layer 250 and exterior layer 260. *See* Ex. 1004 ¶¶ 6, 8, 58–59, Figs. 13, 14. Also, as lululemon correctly notes, Dua teaches that the upper "is formed to exhibit a unitary (i.e., one-piece) construction" and may include "laces or other elements associated with a conventional upper for footwear," such as "a lacing system . . . to provide adjustability." *Id.* ¶¶ 37, 41; *see also id.* ¶ 42 ("the various portions of textile element 40 are formed as an unitary element without seams"); *id.* ¶ 60 ("textile element 40 is a single, unitary element of material"). Indeed, Dua teaches that the upper may be formed by a knitting process that includes "flat knitting" so as to impart various textures, properties, and yarn types to the upper. *Id.* ¶ 60.

With Dua's teachings in mind, lululemon contends that one skilled in the art would have considered it obvious from Hong's teaching of knitting to shape tubular and spherical pieces on a flat-knitting machine to also flat knit

an overlapped loop as a second layer with a first layer of Dua's upper so as to form the lace loops of the upper. *See* Pet. 56–57, 66 (citing Ex. 1002 ¶¶ 111, 113, 130–131). We find that reasoning persuasive.

In response, Nike contends that lululemon's expert conceded it is "unsupported by Dua" that the lace loops and upper shown in Dua's Figure 13 are "knit together." PO Resp. 30–31 (citing Ex. 2005, 130:18–23, 132:1–6). That contention, however, simply does not accord with the evidence. Once again, Nike misconstrues the testimony of lululemon's expert and omits critical portions of his testimony, both intermediary to and immediately following the testimony cited by Nike. More accurately, while acknowledging that Dua's paragraph 37 alone may not disclose a "lace loop," lululemon's expert makes clear that this and "other" disclosures in Dua and Hong support the obviousness of claims 2, 10, and 18—

> Q [by Nike counsel] So you no longer think that paragraph 37 supports your opinion that Dua discloses the loop features of Claims 2, 10 and 18; is that right?
> A [lululemon's expert] It could. *But it's not only those. It could be other things.*

Ex. 2005, 131:11–16 (emphasis added). lululemon's expert then proceeds to explain that, in terms of obviousness, one skilled in the art would have realized that the "lacing system" in Dua's paragraph 41 "could go through loops," as specifically shown in Dua's Figure 13.[8] *Id.* at 132:13–138:19; *see also id.* at 139:16–144:9 (explaining how Dua's lace loops in Figure 13 are knitted with the upper). lululemon's expert also points to Hong's teaching

[8] To the extent Nike points to Dua's Figure 12, it is misplaced. *See* PO Resp. 31. As lululemon correctly notes, "[t]he Petition, however, specifically relied on Figure 13," which is a different embodiment. Pet. Reply 25 (citing Pet. 56–57); Ex. 1004 ¶¶ 29–30, 57–58.

of the unitary construction of a first layer with a second layer to form a tubular structure, such as an overlapped loop, on a flat-knitting machine. *See* Ex. 1002 ¶¶ 113, 131. As such, we reject the notion that lululemon's expert somehow conceded that Dua lacks support for the "loop" limitation of claims 2, 10, and 18.

Rather the record more persuasively supports lululemon's contention that one skilled in the art would have deemed it obvious to use a flat knitting process, as taught both *Hong and Dua*, to unitarily construct together the lace loops and upper depicted in Dua's Figure 13 as a matter of enhancing efficiency and diminishing waste. *See* Pet. 57, 66 (citing Ex. 1002 ¶¶ 113, 131, respectively). And, while Nike correctly notes that Hong's use of the term "loop" merely refers to the commonly known "intermeshed loop" integral to knitting, i.e., a stitch (PO Resp. 34–35), Nike nonetheless ignores Hong's overall teaching of "knit[ting] fully fashioned garments" that include three-dimensional structures, such as tubular forms, on a flat knitting machine (Ex. 1005, 1), which is clearly a technique applicable to the unitary construction of lace loops together with an upper like Dua's.

Nike also tries to draw a distinction between "textile element 240" in Figure 13, which lululemon relies on as showing lace loops, and "textile element 40," which lululemon relies on for unitarily-constructing the lace loops with the upper. *See* PO Resp. 31–33. According to Nike, Dua "never discloses" that "textile element 40" (which includes the "unitary (i.e., one-piece) construction" and "lacing system" described in Dua's paragraphs 37, 41, and 42) is made in the same manner as "textile element 240" of Dua's Figure 13 (which indisputably shows lace loops). *See id.* at 33 ("Dua never discloses loops knitted with textile element 40."). But, in making that

argument, Nike disregards that Dua explicitly states that "textile element 240," which is the upper shown in Figure 13, "is manufactured through the process discussed above[,] [t]hat is, textile element 240 is a single element of textile that forms the interior layer of upper 230," which means it is made in the same manner as "textile element 40" depicted in Dua's Figures 2–8. Ex. 1004 ¶ 59. Indeed, Dua explains the advantage of such a unitary construction—

> Whereas a conventional upper includes various elements that [are] stitched or adhesively joined, textile element 40 is a single, unitary element of material. From the perspective of manufacturing, utilizing multiple materials to impart different properties to an article of footwear may be an inefficient practice. By forming textile element 40 to be a single, unitary element of material, however, efficiency is increased in that upper 20 may include a single textile element, rather than numerous joined elements.

Ex. 1004 ¶ 60.

Those disclosures by Dua, when combined with Hong's teachings of flat knitting three-dimensional tubular forms, support that one skilled in the art would have understood that the lace loops shown in Dua's Figure 13 can be unitarily constructed with the textile material of Dua's upper on Hong's SES 122FF flat knitting machine. *See* Ex. 1002 ¶¶ 111, 113, 130–131. Thus, we determine that lululemon demonstrates, by a preponderance of the evidence, that claims 2, 10, and 18 are unpatentable as obvious over the combined teachings of Dua, Hong, and Lockwood.

3. *Dependent Claims 3–9, 12–17, and 19*

Nike offers no response to lululemon's challenge of dependent claims 3–9, 12–17, and 19, except presumably to rely on its arguments with respect to claims 1, 2, 11, and 18, from which they depend. *See generally* PO Resp.

19–36. Because we already have determined that lululemon demonstrates the unpatentability of claims 1, 2, 11, and 18, we need not further address the uncontested dependent claims.

E. Ground 4

lululemon additionally challenges claims 2–4, 18, and 19 as obvious over Dua, Hong, Lockwood, *and Voughlohn*. *See* Pet. 74–79. Having already determined that these claims are unpatentable as obvious over that same combination without Voughlohn, we need not reach this additional ground of unpatentability. *See Bos. Sci. Scimed, Inc. v. Cook Grp. Inc.*, 809 F. App'x 984, 990 (Fed. Cir. 2020) (non-precedential) (recognizing that the "Board need not address issues that are not necessary to the resolution of the proceeding" and has "discretion to decline to decide additional instituted grounds once the petitioner has prevailed on all its challenged claims").

III. CONCLUSION

After considering the evidence and arguments, we determine that lululemon has established by a preponderance of the evidence that challenged claims 1–19 of the '484 patent are unpatentable as obvious over the combination of Dua, Hong, and Lockwood, notwithstanding Nike's arguments. In sum, we resolve the grounds as follows:

Claims Challenged	35 U.S.C. §	Basis	Claims Shown Unpatentable	Claims Not Shown Unpatentable
1–19	103	Dua, Hong, Lockwood	1–19	
2–4, 18, 19	103	Dua, Hong, Lockwood, Voughlohn[9]		
1, 5–9	103	Lockwood, Dua[10]		
1, 5–9	103	Lockwood, Dua, Norton		
Overall Outcome			1–19	

IV. ORDER

Accordingly, it is hereby:

ORDERED that, pursuant to 35 U.S.C. § 318(a), claims 1–19 of the '484 patent have been shown to be *unpatentable*; and

FURTHER ORDERED that any party seeking judicial review of this decision must comply with the notice and service requirements of 37 C.F.R. § 90.2.[11]

---

[9] Because we determine that claims 1–19 are unpatentable on the Dua-Hong-Lockwood ground, we do not reach this ground.

[10] We do not reach this and the following ground because they have been withdrawn, as discussed above in Section II.C.

[11] Should Nike wish to pursue amendment of the challenged claims in a reissue or reexamination proceeding subsequent to the issuance of this Decision, we draw Nike's attention to the April 2019 Notice Regarding Options for Amendments by Patent Owner Through Reissue or Reexamination During a Pending AIA Trial Proceeding. See 84 Fed. Reg. 16,654 (Apr. 22, 2019). We remind Nike of its continuing obligation to notify the Board of any such related matters in an updated mandatory notice. *See* 37 C.F.R. § 42.8(a)(3), (b)(2).

For PETITIONER:

Ali S. Razai
Benjamin J. Everton
Jacob L. Peterson
MORGAN, LEWIS & BOCKIUS LLP
ali.razai@morganlewis.com
ben.everton@morganlewis.com
jacob.peterson@morganlewis.com

For PATENT OWNER:

Christopher J. Renk
Michael J. Harris
Aaron P. Bowling
Lindsey C. Staubach
ARNOLD & PORTER KAYE SCHOLER LLP
chris.renk@arnoldporter.com
michael.harris@arnoldporter.com
aaron.bowling@arnoldporter.com
lindsey.staubach@arnoldporter.com