Designation: F1979 – 10

An American National Standard

Standard Specification for Paintballs Used in the Sport of Paintball[1]

This standard is issued under the fixed designation F1979; the number immediately following the designation indicates the year of original adoption or, in the case of revision, the year of last revision. A number in parentheses indicates the year of last reapproval. A superscript epsilon (ε) indicates an editorial change since the last revision or reapproval.

INTRODUCTION

This specification sets forth a set of guidelines and testing procedures for the manufacturing of common calibers of paintball. The goal is to provide paintball manufacturers with a specification that promotes safety in the sport of paintball.

1. Scope

1.1 This specification establishes testing procedures and critical characteristics of common calibers of paintball which help define whether a paintball is suitable for use in the sport of paintball. Furthermore, the specification establishes minimum warning and package labeling to help ensure that the paintballs are used in a safe manner and that the risk of injury is reduced.

1.2 This specification does not cover non-recreational paintballs, for example, those used by law enforcement, scientific, military, or theatrical entities.

1.3 The values stated in SI units are to be regarded as the standard. The values given in parentheses are for information only.

1.4 *This specification does not purport to address all of the safety issues associated with the sport of paintball. It is the responsibility of the user of this specification to establish appropriate safety and health practices and to comply with all applicable laws and regulations.*

2. Referenced Documents

2.1 *ASTM Standards:*[2]

F2272 Specification for Paintball Markers

3. Terminology

3.1 *Definitions of Terms Specific to This Standard:*

3.1.1 *caliber, n*—the term used to refer to the size of a paintball projectile. Related to the measurement of the diameter of the paintball.

3.1.2 *cubic centimeter, n*—commonly used unit of volume extending the derived SI-unit cubic meter and corresponding to the volume of a cube measuring 1 × 1 × 1 cm.

3.1.2.1 *Discussion*—The mass of one cubic centimeter of water is approximately equal to 1 g.

3.1.3 *fill material, n*—liquid inside of a paintball.

3.1.4 *paintball, n*—spherical ball, with a diameter and weight as defined in Table 1, comprised of a shell and a fill, and designed to be expelled from a paintball marker.

3.1.5 *paintball marker, n*—device specifically designed to discharge paintballs which conforms to Specification F2272.

3.1.6 *shell*—rigid to semirigid material (generally of gelatin) that encapsulates the fill of a paintball.

4. General Requirements

4.1 *pH of Fill Material*—The pH of the fill material used in the paintball shall measure between 4.0 and 8.0 as measured using a 10 % solution of the fill in distilled water. Measurements shall be made using a properly calibrated pH meter. See Fig. 1 for the pH scale and pH levels for some common items.

4.2 *Paintball Fill Compatibility With Polycarbonate*—When tested in accordance with Section 5, no more than one of the three polycarbonate tensile bars exposed to the fill material shall develop a visible crack that is greater than 6.5 mm (0.256 in.) in length.

4.3 *Maximum Weight*—The paintballs shall not weigh more than as defined in Table 1 based on the caliber of the paintball.

4.4 *Fill Color Limitations*—The paintballs shall not contain fill material with a color mimicking that of human blood.

4.5 *Diameter of Paintball*—The diameter of the paintball as measured both polar and at the seam shall measure within the

[1] This specification is under the jurisdiction of ASTM Committee F08 on Sports Equipment, Playing Surfaces, and Facilities and is the direct responsibility of Subcommittee F08.24 on Paintball and Equipment.

Current edition approved July 1, 2010. Published August 2010. Originally approved in 1999. Last previous edition approved in 2009 as F1979 – 09. DOI: 10.1520/F1979-10.

[2] For referenced ASTM standards, visit the ASTM website, www.astm.org, or contact ASTM Customer Service at service@astm.org. For *Annual Book of ASTM Standards* volume information, refer to the standard's Document Summary page on the ASTM website.

Copyright © ASTM International, 100 Barr Harbor Drive, PO Box C700, West Conshohocken, PA 19428-2959. United States

Downloaded/Printed/Accessed by user: Kenneth, Darby | Date: Fri Nov 08 13:59:49 2024

SPIN MASTER 2117
Prime Time Toys et al. v. Spin Master, Inc.
IPR2023-01461

TABLE 1 Common Calibers of Paintballs with Minimum and Maximum Diameter and Maximum Weight

	68 Caliber 18 mm	43 Caliber 11 mm	50 Caliber 13 mm	55 Caliber 14 mm	62 Caliber 16 mm
Min (mm) Diameter	16.500	10.430	12.130	13.340	15.000
Max (mm) Diameter	18.000	11.390	13.240	14.560	16.420
Min (in) Diameter	0.650	0.410	0.470	0.520	0.590
Max (in.) Diameter	0.709	0.448	0.521	0.573	0.646
Weight (g) Maximum	3.500	0.900	1.400	1.700	2.500
Weight (oz) Maximum	0.123	0.032	0.049	0.060	0.088

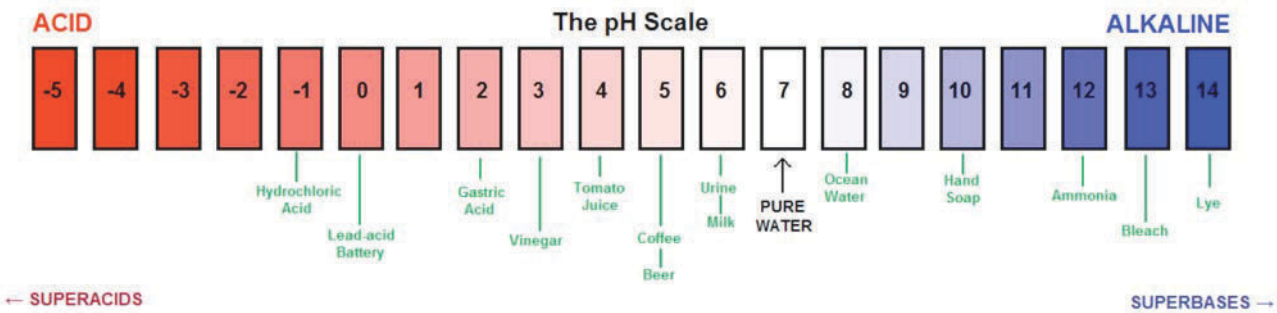

FIG. 1 The pH Scale

minimum and maximum range as defined in Table 1 based on the caliber of the paintball.

4.6 *Impact Breakage*—The impact breakage of the paintball shall be tested in accordance with Section 6. All ten of the paintballs that impact the target shall break upon impact.

4.7 *Environmental Safety*—Paintballs shall not contain environmentally hazardous or toxic substances as defined in CERCLA[3] Regulations 40CFR302.4; SARA Toxic Chemical List[4] Section 313; Clean Air Act[5], Section 112B; and RCRA Regulations[6] 40FRR261.24 through 40CFR261.33.

TEST METHODS

5. Paintball Compatibility with Polycarbonate

5.1 *Scope*—This test method is intended to determine the compatibility of the paintball fill with polycarbonate, the plastic material currently universally used for protective eyewear lenses in paintball.

5.2 *Summary of Test Method*—This test method involves bending polycarbonate tensile bars in a test fixture while these bars are exposed to the paintball fill material and observing how these tensile bars react to the fill. A control test is also conducted using tap water in place of the paintball fill material.

5.3 *Significance and Use*—This test method provides a means to help determine the suitability of specific paintball fill material for use in the sport of paintball. This test method provides a relative indicator of the reaction that a polycarbonate lens would have to the paintball fill material being tested.

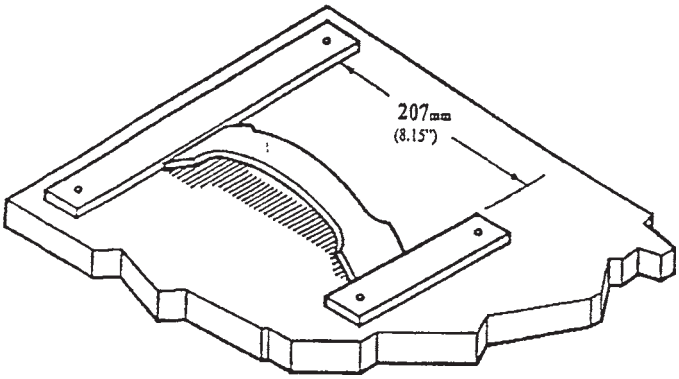

FIG. 2 Tensile Bar Shown Without Wrapping

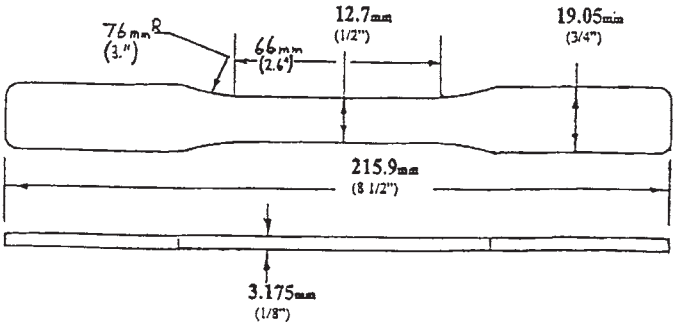

FIG. 3 Tensile Bar

[3] U.S. Environmental Protection Agency, "Designation of Hazardous Substances List of Hazardous Substances and Reportable Quantities," *Comprehensive Environmental Response Compensation and Liabilities Act*, Bureau of Federal Affairs, 40CFR302.4, April 4, 1985.

[4] U.S. Environmental Protection Agency, "Superfund Amendment and Reauthorization Act," *Environmental Protection Agency Regulation*, Bureau of Federal Affairs, Title III, 1986.

[5] U.S. Environmental Protection Agency, "National Emission Standards for Air Pollutants List of Hazardous Air Pollutants," *Clean Air Act*, Bureau of Federal Affairs, Section 112B, 1967.

[6] U.S. Environmental Protection Agency, "Definition of Characteristic and Listed Hazardous Waste, Identification and Listing of Hazardous Waste," *Resource Conservation and Recovery Act*, Bureau of Federal Affairs, 40CFR261, May 19, 1980.

5.4 *Apparatus:*

This test method shall be conducted using a test fixture as shown in Fig. 2. The tensile bars[7] used in the test shall be molded of clear 121 grade Lexan[8], polycarbonate (Fig. 3).

5.5 *Procedure:*

5.5.1 Test 3 separate tensile bars for each type of paint being tested. Test a total of 2 tensile bars in the control test using tap water.

5.5.2 Place the fill from 4 paintballs of the tested paint into a polyethylene bag, (the zip-lock variety works well), along with one tensile bar. Place 15 mL (½ oz) of tap water, along with one tensile bar into each of the two control sample polyethylene bags. Wrap each bag around the bar so that the fill or water is in contact with the center of the bar, and seal the bag to prevent fill leakage or evaporation.

5.5.3 Bend the bagged tensile bars between the two stops on the test fixture (Fig. 2), which induces a 1.0 % strain or approximately 175.75 k/cm^2 (2500 psi). Store the bent tensile bars in the test fixture at room temperature 23 ± 2°C (73 ± 3.5°F) for 7 days. During the entire 7-day period, the paintball fill material shall be in contact with the center of the tensile bars. Inverting the test fixture is one method of ensuring this contact. Wrapping the bag snugly around the tensile bars is another proven method.

5.5.4 After 7 days, remove the tensile bars from the test fixture and rinse with clean tap water. Dry the tensile bars and inspect for cracks.

5.6 *Report*—Inspect the tensile bars for cracks by holding the bars vertically facing either direct sunlight or a bright light source. Tilt the bars slightly to highlight any cracks. Record and report the length of the longest crack on each tensile bar. If either of the tensile bars used in the control test exhibit a crack of 3 mm (0.112 in.) in length, and cracks longer than 6.5 mm have also been found in two of the three tensile bars exposed to the fill material, the test may be considered invalid and performed again using a different batch of tensile bars.

5.7 *Precision and Bias*—No information is presented about either the precision or bias of this test method since this test method is nonquantitative.

6. Paintball Impact Breakage Test

6.1 *Scope*—This test method is intended to determine the ability of the paintballs to burst upon impact.

6.2 *Summary of Test Method*—This test method involves shooting paintballs from a paintgun at a target, within the parameters of this specification, to test for the breakage of the paintballs upon the target.

6.3 *Significance and Use*—In the sport of paintball, a player who is marked with fill of a paintball is eliminated from the game, and thus it is desirable that a paintball be designed within parameters such that its outer shell can split open and allow its fill to mark the player. This test method provides a means of identifying the breakage ability of paintballs within parameters that reasonably approximate conditions common in the game of paintball. This test method provides a means of identifying the breakage of paintballs by impacting a target at a velocity common in the game of paintball.

6.4 *Sampling*—Select 30 paintballs at random from the lot of paintballs being tested.

6.5 *Apparatus:*

6.5.1 A paintball marker capable of hurling paintballs horizontally at a speed of 85.3 ± 6 m/s (280 ± 20 ft/s) that complies with Specification F2272. Each shot's muzzle velocity shall be measured and if not within tolerance, that impact is not valid.

6.5.2 Equipment employed to measure the speed of the test paintball shall be accurate to within ±0.5 m/s (±20 ft/s) muzzle velocity.

6.6 *Conditioning:*

6.6.1 All impact testing shall be done using paintballs manufactured within the previous 8 months.

6.6.2 Paintball storage and the non-test handling shall be done at a relative humidity below 65 % and a temperature between 19°C (66°F) and 27°C (80°F).

6.6.3 Paintballs shall be conditioned in their original sealed container for at least 4 h at the humidity and temperature specified in 6.6.2.

6.6.4 The testing shall be conducted at the temperatures specified in 6.6.2 and shall be completed within 10 min after removal of the paintball from the sealed container. The paintball container shall be resealed immediately after each group of paintballs is removed.

6.7 *Procedure:*

6.7.1 Secure a plywood target with a minimum thickness of 10-mm vertically at a distance of 24.4 ± 0.3-m (80 ± 1-ft) linear ground distance from the muzzle of the paintball marker. Width and length of the target to be of a size that the laboratory determines necessary to hit the target.

6.7.2 Measure the velocity of the paintball within 1.0 m (3.3 ft) of the muzzle of the propelling device. Paintball velocity shall be 85.3 ± 6 m/s (280 ± 20 ft/s).

6.7.3 Impact the plywood target with ten paintballs at an angle nominally normal to the target and at the distance in accordance with 6.7.1. Only those shots that are within the velocity tolerance in accordance with 6.7.2 shall be used in this test method.

6.8 *Precision and Bias*—No information is presented about either the precision or bias of this test method since this test method is nonquantitative.

7. Product Marking

7.1 *General Instructions:*

7.1.1 Warnings, instructions, caliber, quantity contained in the container, and the name and address of the manufacturer or distributor shall appear on the exterior of each point of sale container in which a manufacturer packages its paintballs.

[7] The sole source of supply of the apparatus known to the committee at this time is Hi Tech Mold and Tool Inc., 1520 East St., Pittsfield, MA 01201. If you are aware of alternative suppliers, please provide this information to ASTM International Headquarters. Your comments will receive careful consideration at a meeting of the responsible technical committee,[1] which you may attend.

[8] Lexan is a trademark of GE Plastics.

7.1.2 The lot number of paintballs shall appear on each point of sale container containing 500 or more paintballs.

7.1.3 The size of the print for warnings, instructions, and manufacturer's information shall be of a type size of at least 8 points. The add letters in the word WARNING shall be at least 50 % larger than the letters in the other words in the cautionary statement.

7.2 *Warning Information*—The following warning information or its equivalent shall appear as defined in 7.1.

7.2.1 These paintballs are intended only for use in the sport of paintball; follow all rules for safe paintball play.

7.2.2 Goggles, facemasks, and ear protection designed specifically for use in paintball games are mandatory at all times for all persons who are within paintball gun range.

7.2.3 Failure to follow the rules for safe paintball play, and the instructions and recommendations in this specification, may result in bodily injury including face, eye, and ear injury, blindness, or deafness.

7.2.4 Do not shoot paintballs at a speed in excess of 300 ft/s (92 m/s).

7.2.5 Do not ingest.

7.3 *Instruction Information:* The following instruction information or its equivalent shall be in accordance with 7.1.

7.3.1 Failure to follow these storage instructions may adversely affect performance and quality and increase the possibility of injury.

7.3.2 Instructions on how to properly store paintballs including: temperature and humidity ranges for storage and packaging requirements.

8. Keywords

8.1 caliber; paintball; paintball marker; paintball sports

ASTM International takes no position respecting the validity of any patent rights asserted in connection with any item mentioned in this standard. Users of this standard are expressly advised that determination of the validity of any such patent rights, and the risk of infringement of such rights, are entirely their own responsibility.

This standard is subject to revision at any time by the responsible technical committee and must be reviewed every five years and if not revised, either reapproved or withdrawn. Your comments are invited either for revision of this standard or for additional standards and should be addressed to ASTM International Headquarters. Your comments will receive careful consideration at a meeting of the responsible technical committee, which you may attend. If you feel that your comments have not received a fair hearing you should make your views known to the ASTM Committee on Standards, at the address shown below.

This standard is copyrighted by ASTM International, 100 Barr Harbor Drive, PO Box C700, West Conshohocken, PA 19428-2959, United States. Individual reprints (single or multiple copies) of this standard may be obtained by contacting ASTM at the above address or at 610-832-9585 (phone), 610-832-9555 (fax), or service@astm.org (e-mail); or through the ASTM website (www.astm.org). Permission rights to photocopy the standard may also be secured from the ASTM website (www.astm.org/COPYRIGHT/).