Petitioners' Demonstrative Slides
May 16, 2025 Hearing

Prime Time Toys LLC, Prime Time Toys Ltd.
and Easebon Services Ltd. (Petitioners)
v.
Spin Master, Inc. (Patent Owner)

U.S. Patent Nos. 8,640,683, 8,371,282, and 8,596,255

Case No. IPR2023-01339 ('683 Patent)

Case No. IPR2023-01348 ('282 Patent)

Case No. IPR2023-01461 ('255 Patent)

PETITIONERS' EXHIBIT 1054
Prime Time Toys et al. v. Spin Master, Inc.
IPR2023-01461

Table Of Contents

5 Injury Was The Problem

12 Spitballs Was A Known, Predictable Solution To The Injury Problem

21 Combining Spitballs And Peev Was In The POSITA's Technical Grasp…

30 PO Does Not Present A SAP Expert In These IPRs

35 Dr. Courtney Properly Rebuts PO's New Kinetic Energy Theory

42 PO's Arguments Against Dr. Courtney's Testimony Fail

49 The ASTM Standards Support Petitioners' Motivation To Combine Theory

53 PO Cannot Show A Nexus – PO's Objective Indicia Arguments Fail

Status Of The Three IPR Proceedings

PO Disclaimed:

- Claims 1-3, 10 and 11 of the ‘683 Patent, 1339 IPR, Ex. 2014
- Claims 1 and 4 of the ‘282 Patent, 1348 IPR, Ex. 2013

PO’s Secondary Considerations Arguments Only Apply To:

- Claims 5, 8, and 9 of the ‘683 Patent
- Claims 8, 19, and 20 of the ‘282 Patent
- No Claims of the ‘255 Patent

Remaining Challenged Claims:

- Claims 4-9, 12 and 14 of the ‘683 Patent
- Claims 2, 3, 5-15, 17 and 19-21 of the ‘282 Patent
- Claims 1, 2, 13 and 15-20 of the ‘255 Patent

Motivation To Combine

KSR Int'l Co. v. Teleflex Inc.

"When there is a design need or market pressure to ***solve a problem*** and there are a ***finite number of identified, predictable solutions***, a person of ordinary skill has good reason to ***pursue the known options within his or her technical grasp***. If this leads to the anticipated success, it is likely the product not of innovation but of ***ordinary skill and common sense***."

KSR Int'l Co. v. Teleflex Inc., 550 U.S. 398, 421 (2007)
cited in: '683 Patent Petition, Paper 2, p. 35
'282 Patent Petition, Paper 2, p. 33
'255 Patent Petition, Paper 2, p. 34

Under *KSR*, Injury Was The Problem

Director Decision:
Safety Was A Concern For Airsoft Guns

common sense"). Indeed, the current record includes detailed articles and reports documenting the danger of injuries, as well as admissions by Patent Owner's expert, Dr. Kudrowitz, that persuasively point to the opposite conclusion—that safety *was* a concern for airsoft guns such as Peev's that were used for "military simulations or training" and "games." *See* Ex. 1003,

Director Decision, Paper 12, pp. 11-12

Director Decision Cites Articles And PO's Expert

were used for "military simulations or training" and "games." *See* Ex. 1003, 22 (Peev's uses); Ex. 1004, 433:18–434:15 (testimony regarding Peev's uses), 439:16–20 (testimony that "you could be harmed by the ammunition" used in airsoft guns), 441:14–442:18 (testimony that injury, such as bruising, black and blue marks, and welts, is possible with plastic ammunition fired at muzzle velocities below 350 feet per second); Ex. 1005, 2–3 (describing injuries from airsoft guns fired at up to 450 feet per second, which may be "enough to crack the skin and cause minor bleeding. Some airsoft guns can even cause more damage than their brethren, paintball guns—which have to shoot at higher velocities because of the greater size of their rounds."); Ex. 1019, 9 (noting "damage to the human eye" can occur at a muzzle velocity of 130 feet per second); Ex. 1020, 3 (noting penetration of the skin can occur at a muzzle velocity of 300 to 400 feet per second).

Director Decision, Paper 12, p. 12

PO Seeks To Minimize The Problem By Ignoring Teens/Young Adults

PO attempts to place airsoft gun use into just two categories, (1) low-powered guns used as toys by young children which allegedly do not cause injuries, and (2) high-powered guns used for police/military training and supervised airsoft games, where the person being hit is supposed to feel it. Paper19, pp.27-32. Under these two scenarios, PO argues there is no injury problem.

'683 Patent Reply, Paper 24, pp. 6-7; '282 Patent Reply, Paper 24, pp. 6-7; '255 Patent Reply, Paper 23, p. 6

Teens/Young Adults Were Getting Injured By Airsoft Guns

[W]e observed ... an escalating number of ocular ***injuries*** caused by "airsoft" or "softgun" toy weapons. ... These toy guns have gained popularity among ***youngsters***...

The innocent name and misleading marketing contribute to the ***danger of airsoft guns***.

Ex. 1048

'683 Patent Reply, Paper 24, p. 7
'282 Patent Reply, Paper 24, p. 7
'255 Patent Reply, Paper 23, p. 7
(all citing Ex. 1048, pp. 1437-1438)

"Although most BB [airsoft] guns[2] fire ***low-velocity*** missiles, some can still shoot to ***penetrate the abdomen, thorax, facial sinuses and even the cranium***.[] A ***pellet*** with a velocity of ***45 m/s*** [*i.e.*, 148 fps] can penetrate human skin and a velocity reaching ***60 m/s*** [*i.e.*, 197 fps] can fracture bone." Ex.1033, p.490, citing articles from 1986, 1995, 1996 and 2004.

Ex. 1033

'683 Patent Reply, Paper 24, p. 8
'282 Patent Reply, Paper 24, p. 8
'255 Patent Reply, Paper 23, p. 7
(all citing Ex. 1033, p. 490)

PO's ASTM Standards Call Out The Injury Problem

To perform as intended, a low energy air gun requires a level of power which, if misused, can cause serious injury. This specification is intended to reduce the hazards associated with low energy air gun

This standard does not purport to address all of the safety concerns, if any, associated with its use. ***It is the responsibility of the user of this standard to establish appropriate safety*** and health practices...

Id., ¶1.4; Ex.2028, ¶1.4 (ASTM F2679-07 stating the same).

'683 Patent Reply, Paper 24, pp. 14-15; '282 Patent Reply, Paper 24, pp. 14-15; '255 Patent Reply, Paper 23, p. 14
(all citing Ex. 2029, p.1 and ¶1.4; and Ex. 2028, ¶1.4)

Even The Patents Acknowledge The Injury Problem

There are also small projectile systems for gaming and professional training purposes. These include paint ball guns and airsoft guns, but these systems are for adult use only due to the energy imparted to the projectile and the ability of the projectile to do serious harm.

'683 Patent, Ex. 1001, Col. 1:63-67; '282 Patent, Ex. 1001, Col. 1:56-60; '255 Patent, Ex. 1001, Col. 1:66-Col. 2:3

Under *KSR*, Spitballs Was A *Known, Predictable Solution* To The Injury Problem

Director Decision:
A POSITA Would Be Motivated To Look To Soft Spitballs

Here, considering the evidence of record, I find that Petitioner has shown a reasonable likelihood of prevailing with respect to one or more challenged claims based on its contention that a person of ordinary skill in the art would have had a reason to modify Peev in view of Spitballs. In particular, Petitioner has shown sufficiently that safety concerns with airsoft guns, such as Peev's, would have provided a motivation for a person of ordinary skill in the art to look to solutions, such as softer ammunition like Spitballs, to decrease the risk of injury. *See* Pet. 36–39. I further find that,

Director Decision, Paper 12, p. 14

PO's Expert Admitted That Soft Ammunition Was A Known Solution To The Injury Problem

Q. So you agree that a ***person of ordinary skill in the art would have known in 2009*** that another way to make a projectile ***less likely to cause injury*** would be to ***make it softer***.

A. ***That's another way to do it.***

'683 Patent Petition, Paper 2, p. 39
'282 Patent Petition, Paper 2, p. 36
'255 Patent Petition, Paper 2, p. 37
(all citing Ex. 1004, pp. 531:25-532:9)

All Experts Agreed That Spitballs Broke Apart On Contact

Spitballs were softer projectiles ("Will bounce and/or explode into mushy parts on impact" Ex. 1002, 21 that could be used in place of the hard spherical plastic ammunition. Ex. 1016, ¶85. Dr. Kudrowitz admitted several times that the Spitballs packaging taught a POSITA that Spitballs break apart when they hit a target. Ex. 1004, 462:3-15, 475:13-15. ("Q. And, as you pointed out before, the ***SAP Spit Balls also explode on contact***, correct? A. ***Correct***.").

'683 Patent Petition, Paper 2, p. 39; '282 Patent Petition, Paper 2, pp. 36-37; '255 Patent Petition, Paper 2, pp. 37-38

PO's Expert Agreed That A POSITA Knew That SAP Would Reduce The Risk Of Injury

Q. … So do you agree that if a SAP projectile breaks down on impact, then the force at impact is spread over a much wider surface area, and this reduces the likelihood of injury?

A. That seems true.

Q. Was it known prior to 2010 that if a projectile hits a target and the force at impact is spread over a wide surface area, the likelihood of injury would be reduced?

* * *

A. That is a way of reducing the impact or the effects of the impact, but again, in certain cases there might not be injury in any case, or there might be injury regardless.

'683 Patent Reply, Paper 24, p. 11
'282 Patent Reply, Paper 24, p. 11
'255 Patent Reply, Paper 23, pp. 10-11
(all citing Dr. Kudrowitz Tr., Ex. 1036, pp. 91:11-15, 93:14-22 (objection omitted))

Even The Patents Acknowledge This

down and lose their shape. Because SAP projectiles break down under excessive pressure, the force at impact is spread over a much wider surface area, thus reducing the likelihood of injury.

'683 Patent, Ex. 1001, Col. 3:67-Col. 4:3; '282 Patent, Ex. 1001, Col. 3:58-61; '255 Patent, Ex. 1001, Col. 5:8-11

Director Decision: Petitioners Did Not Allege Elimination Of All Risk

[8] Indeed, Petitioner did not allege that the combination completely eliminated the risk of injury (*see* Pet. 38 ("[O]ne way to make a hard projectile less likely to cause injury would be to make it softer.")).

Director Decision, Paper 12, p. 13, fn. 8

Pfizer, Inc. v. Apotex, Inc., 480 F.3d 1348, 1364 (Fed. Cir. 2007) (noting that, to show obviousness, "the expectation of success need only be reasonable, not absolute")). Petitioner demonstrates sufficiently that a person with ordinary skill in the art would have had reason to combine Peev and Spitballs to achieve a suitable solution to mitigating the safety risk associated with airsoft guns. Thus, contrary to the Board's finding, the current record, including the admissions by Dr. Kudrowitz, supports Petitioner's contention that a person of ordinary skill would have had a reasonable expectation of success that using softer ammunition would decrease the risk of injury. *See* Ex. 1004, 387:3–15, 400:13–15, 439:25–440:9.

Id., p. 13

A Softer Projectile Does Not Have To Be The Only Solution, Or The Best Solution

also reduces the chance of injury, Petitioner need not show that softer ammunition is the best option to increase safety, but merely needs to demonstrate that it a suitable option to a person of ordinary skill. *See Intel Corp. v. PACT XPP Schweiz AG*, 61 F.4th 1373, 1380 (Fed. Cir. 2023) (noting "[i]t's not necessary to show that a combination is the *best* option, only that it [is] a *suitable* option").

Director Decision, Paper 12, p. 12

There Were A Finite Number Of Alternatives

On the issue of whether there were a finite number of alternatives to hard airsoft ammunition, PO ignores the fact that SAPs were already identified as ammunition for air powered launchers (e.g., a blowgun) and were known to be safe ("explode into mushy parts on impact"). Ex.1002, pp.15, 18. Indeed, PO disclaimed Claim 1 of the '683 Patent, which claimed a projectile launching system comprising SAP ammunition and a projectile launcher, in response to Petitioners' argument that Spitballs anticipates Claim 1. Ex.2014.

Instead, PO makes the ***attorney argument*** that "rubber, cork, foam, and soft plastics" represent "countless distinct polymers" that were ***known to be suitable for use*** as ammunition. Paper19, p.26, citing Ex. 2120. However, Exhibit 2120 doesn't say that such polymers were ***suitable for use as ammunition*** and PO offers ***no expert testimony*** in support of this ***attorney argument***.

'683 Patent Reply, Paper 24, p. 17
'282 Patent Reply, Paper 24, p. 17
'255 Patent Reply, Paper 23, pp. 16-17

Under *KSR*, Combining Spitballs And Peev Was In The POSITA's *Technical Grasp* And The POSITA Had A *Reasonable Expectation* Of Success

PO Argues That The Experts Never Opined That Peev And Spitballs Could Be Combined

without sacrificing softness. And neither expert ever opined that there was a reasonable expectation of success in achieving a ***soft*** SAP projectile with sufficiently increased gel strength to withstand the firing forces of a high-powered airsoft gun like Peev's—the kind Petitioner says raise injury concerns.

'683 Patent Sur-Reply, Paper 33, p. 20; '282 Patent Sur-Reply, Paper 33, p. 20; '255 Patent Sur-Reply, Paper 30, pp. 20-21

Dr. Kudrowitz Admits:
Peev Does Not Say High-Powered And Gives No Muzzle Velocity

Q. … But sitting here today, you're not aware of any discussion of Peev's Airsoft gun being high-powered; is that right?

A. Sitting here today, I don't know offhand if it says "high-powered."

* * *

Q. Okay. What is the muzzle velocity of Peev's Airsoft gun?

A. Peev does not disclose a specific muzzle velocity.

Kudrowitz Tr., Ex. 1036, p. 149:19-23 and p. 151:5-8

Dr. Kudrowitz Admits: Peev Teaches Low And High Velocity

Q. So in paragraph 81, you have referred to Peev's Airsoft gun as a high-powered device; correct, third line from the bottom of paragraph 81 of cite?

A. That is what I cite here, yes.

Q. Okay. What do you mean by "high-powered"?

A. It shoots at high velocity.

. . .

Q. How fast?

A. Within the range of Airsoft.

Q. Which is?

. . .

A. So I believe the Airsoft Q&A has Airsoft ranging from 100 to 500 feet per second, but I don't know the exact lower limit.

Kudrowitz Tr., Ex. 1036, p. 130:15-131:9

But PO's Expert Admitted The Combination Was Within The POSITA's Technical Grasp

Q. Sure. ***In 2009 was it within the technical grasp*** of a person of ordinary skill in the art to ***modify Airsoft guns such as Peev to launch soft SAP projectiles*** in place of the hard plastic spheres that the Airsoft guns used?

A. I see. If someone was asked to do so, ***they would have the ability to do that***.

Q. It was in their technical skills to do that, correct?

A. Sure.

'683 Patent Petition, Paper 2, pp. 40-41
'282 Patent Petition, Paper 2, p. 38
'255 Patent Petition, Paper 2, p. 39
(all citing Ex. 1004, p. 532:15-23 (Dr. Kudrowitz))

PO's SAP Expert In The ITC Admitted A POSITA Could Use SAP Ammunition In A Projectile Launcher

Q. … So you do agree with Dr. Reitman that adjustments to size, strength, and durability of the gel were all routine and easily accomplished by well-known methods at the time of the invention of the asserted patents?

A. Of course, it always takes some work … But the literature available at the time would provide such guidance.

Q. … do you agree that a POSITA would have known how to produce soft projectile SAP ammunition configured for use with a projectile launcher as of the priority date of the asserted patents?

A. Yes.

'683 Patent Reply, Paper 24, p. 18; '282 Patent Reply, Paper 24, p. 18; '255 Patent Reply, Paper 23, pp. 17-18 (all citing Ex. 1035 (Fuller Tr.), pp. 150:18-151:11)

Petitioners' Expert: A POSITA Had A Reasonable Expectation Of Success

85. Prior to 2010, Spitballs were softer projectiles ("Will bounce and/or explode into mushy parts on impact." Ex. 1002, 21) that could be used in place of the hard spherical plastic ammunition to address the injury problem.

86. There was a finite number of ammunition options that a POSITA could have considered that would have a reasonable expectation of success in an airsoft gun such as Peev, including rubber, cork, foam, and soft plastics, such as SAPs. Based on my discussions with Dr. Reitman I understand that SAPs were known to be easily adjustable as to size, shape and softness. This is a significant advantage in adapting SAPs for use with airsoft guns. For example, the gel strength may be adjusted to ensure that the SAP ammunition does not break apart when loaded into and launched from the barrel of the gun.

'683 Patent Delman Decl., Ex. 1016, Pars. 85, 86
'282 Patent Delman Decl., Ex. 1016, Pars. 77, 78
'255 Patent Delman Decl., Ex. 1016, Pars. 76, 77

Even The Patents Say SAPs Can Be Launched Without Breaking Apart And Still Reduce The Likelihood Of Injury

example, hydrated SAP projectiles can maintain their shape under modest pressure. The ability of SAP projectiles to maintain their shape allows them to be projected with a reasonable force and velocity without breaking apart. However, under excessive pressure, hydrated SAP projectiles will break down and lose their shape. Because SAP projectiles break down under excessive pressure, the force at impact is spread over a much wider surface area, thus reducing the likelihood of injury.

'683 Patent, Ex. 1001, Col. 3:62-4:3
'282 Patent, Ex. 1001, Col. 3:53-61
'255 Patent, Ex. 1001, Col. 5:3-11

Dr. Kudrowitz Agrees That SAPs "become soft-projectiles" "when hydrated"

10. When hydrated, the Xploderz and Blaster Pro ammunition become soft-projectiles. They are soft to the touch and break apart upon impact, *see* HASBRO-ITC-00111584 (website for Xploderz describing the ammutiion as "soft enough to disintegrate on impact"); HASBRO-ITC-PHYS_00064 (text on package saying Blaster Pro "ammo disintegrates on impact!").

28. As noted below, each of the Xploderz Products and Blaster Pro Products included hydrated spherical ammunition and/or ammunition with instructions directing the user to hydrate ammunition, and in doing so, satisfy the limitation of soft-projectiles are formed from hydrated super absorbent polymer. *See, e.g.*, HASBRO-ITC-00111575-HASBRO-ITC-00111582;

Kudrowitz Decl., Ex. 2015, App. 1, Par. 10 (analyzing Claim 1 of the '282 Patent)
Par. 28 (analyzing Claim 1 of the '683 Patent)

PO Does Not Present A SAP Expert In These IPRs

PO's Attorneys Argue That Spitballs Lacks SAP Details

Worse, the Spitballs reference gives no clue as to what kind of chemistry, crosslinking, network topology, or manufacturing techniques were used to make the described polymers. *See generally* EX1002. With innumerable possibilities and no place to start, there is no record evidence that someone with "a bachelor's in materials science chemistry, or [the] equivalent," (Pet. 19), would have reasonably expected to succeed at achieving the '683 Patent's claimed invention by adjusting the polymer structures and properties of Spitballs to somehow make suitable and softer ammunition for a high-powered airsoft gun.[5] Dr. Reitman leaves this critical issue unanswered.

'683 Patent Response, Paper 19, pp. 35-36; '282 Patent Response, Paper 19, pp. 35-36; '255 Patent Response, Paper 20, p. 34

Petitioners' SAP Expert Explained That Determining The Details Was Straightforward And Routine

- "to make [SAP projectiles] stronger and not break apart, the chemist would increase the crosslink density",
- doing so "would have been a straightforward routine thing to do", "even though the '683 patent does not identify what SAP to use" or a "specific crosslinker to use" or "what polymer chemistry to use", and
- "the knowledge to increase crosslink density to increase resistance to fracture increased strength was well known and straightforward and did not require having an example disclosed."

'683 Patent Reply, Paper 24, pp. 19-20; '282 Patent Reply, Paper 24, pp. 19-20; '255 Patent Reply, Paper 23, p. 19 (all citing Ex. 2030 (Reitman Tr.), pp. 123:17-125:2)

The Patents Lack The Same Details

Finally, PO's criticism that Spitballs does not describe a specific SAP or crosslinker (Paper19, p.35) rings hollow because, as Dr. Kudrowitz admitted, the '683 Patent also does not disclose specific chemistry, crosslinking, network topology, or manufacturing techniques for its own SAP ammunition. Ex.1036, pp.114:19-115:8.

'683 Patent Reply, Paper 24, p. 20; '282 Patent Reply, Paper 24, p. 20; '255 Patent Reply, Paper 23, p. 19

Petitioners Have Met Their Burden On Obviousness

Dr. Kudrowitz and Petitioners' expert (Joel Delman) agree, at the time of the alleged invention the POSITA (1) knew about the injury problem, (2) knew one solution was to make the ammunition softer, (3) knew about soft spherical SAP ammunition (Spit Balls) and a few other alternatives, and (4) had the technical skill to combine this ammunition with Peev. As explained by the Supreme Court, undisputed facts like these point not to innovation but to ordinary skill and common sense.

'683 Patent Petition, Paper 2, p. 3; '282 Patent Petition, Paper 2, p. 3; '255 Patent Petition, Paper 2, pp. 4-5

Dr. Courtney Properly Rebuts PO's New Kinetic Energy Theory

PO's Kinetic Energy Argument Is New

- Kinetic energy ***is not mentioned in the ITC's Initial Determination***.

  Ex. 2007

- ***Dr. Kudrowitz did not testify*** about kinetic energy at the ITC hearing.

  Ex. 1004

- PO's ***Preliminary Response did not discuss*** kinetic energy.

  '683 and '282 Patents, Paper 6; '255 Patent, Paper 8

- Kinetic energy was ***first raised in PO's Response***.

  '683 and '282 Patents, Paper 19, pp. 14-18; '255 Patent, Paper 20, pp. 13-17

- ***Petitioners timely rebutted*** this new theory in their ***Reply***.

  '683 and '282 Patents, Paper 24, pp. 9-14; '255 Patent, Paper 23, pp 8-14

PO Argues That A 15 mm SAP Projectile Is Too Heavy

Spitballs are not the equivalent of airsoft ammunition, only softer. As I have explained, Spitballs are massive compared to lightweight airsoft ammunition, and Spitballs will have a higher muzzle energy as a result. With a 15.24 mm (0.6 inch) diameter and a mass of 1.844 g, Spitballs more closely resemble 55 caliber paintballs (14 mm, 1.7 g) than airsoft ammunition (see below). And, again, paintballs were

Kudrowitz Decl., Ex. 2015, Par. 62

little as 0.12 g, (EX2015 ¶59). Accordingly, Spitballs are ***more than 14 times*** heavier and have ***more than 14 times*** as much kinetic energy (or "muzzle energy"). POR 16, EX2015 ¶59. This fact is undisputed, but the parties diverge on its import.

'683 Patent Sur-Reply, Paper 33, p. 3; '282 Patent Sur-Reply, Paper 33, p. 3; '255 Patent Sur-Reply, Paper 30, p. 3

But Petitioners Relied On A 6 mm Projectile – Not 15 mm

combinable. Patent Owner may argue that if a POSITA fully hydrates Spitballs, then they will grow to a size (e.g., 15mm) that is too large to fit in the airsoft gun of Peev (6mm). Alternatively, Patent Owner may argue that if a POSITA does not

'683 Patent Petition, Paper 2, p. 5; '282 Patent Petition, Paper 2, p. 5; '255 Patent Petition, Paper 2, p. 7

Even The Patents Suggest Using 15 mm SAP Projectile

Soft-projectiles made from a SAP can be any size. Preferably, however, the soft-projectiles made from a SAP are between about 3 millimeters (mm) and about 15 mm in diameter when hydrated and more preferably between about 5 mm and 8 mm in diameter when hydrated. Typically, the soft-projectiles are about 1 mm or less when the SAP forming the projectile is dehydrated.

Larger soft-projectiles made from a SAP are possible. For example, rounds having a diameter of 30 mm have been created. However, there is approximately a 20% tolerance on

'683 Patent, Ex. 1001, Col. 4:34-43; '282 Patent, Ex. 1001, Col. 4:24-33; '255 Patent, Ex. 1001, Col. 5:41-50

PO Ignores Deformation, Fragmentation And Scattering

Dr. Kudrowitz ignores the fundamental principles of physics that the kinetic energy of a projectile can be dissipated in multiple ways, including by deformation, fragmentation, and scattering of the fragments. Ex.1037, ¶56. This is exactly what SAP projectiles (Spitballs) do when they strike a target, *i.e.*, they "***bounce*** and/or explode into ***mushy parts*** on impact." Ex.1002, p.15; Ex.1037, ¶¶16, 76. ***All of the kinetic energy used to deform, fragment and scatter the SAP projectile is <u>not transmitted</u> to the target (e.g., skin or eye)***. ***<u>This reduces the injury potential</u>*** of a SAP projectile compared to projectiles with similar kinetic energy but that do not deform, fragment, or scatter. *Id.*, ¶¶56-63.

'683 Patent Reply, Paper 24, p.11; '282 Patent Reply, Paper 24, p.11; '255 Patent Reply, Paper 23, p.10
(all citing Dr. Courtney Decl., Ex. 1037)

PO's Argument Contradicts What A POSITA Knew

Q. Was it known prior to 2010 that if a projectile hits a target and the force at impact is spread over a wide surface area, the likelihood of injury would be reduced?

* * *

A. That is a way of reducing the impact or the effects of the impact, but again, in certain cases there might not be injury in any case, or there might be injury regardless.

Dr. Kudrowitz Tr., Ex. 1036, p. 93:14-22 (objection omitted)

PO's Arguments Against Dr. Courtney's Testimony Fail

Petitioners' Expert Is Qualified To Opine That A POSITA Knew Basic Principles Of Physics

24. In the ITC Case, I understand that Petitioners and Mr. Delman proposed that a POSITA at the time of the alleged invention of the '282 and '683 Patents would be "(i) an individual with a Bachelor's degree in Industrial Design or Mechanical Engineering or (ii) a toy designer with at least five years' experience designing toys (including launchers), with both of (i) and (ii) having access to a chemist knowledgeable regarding super absorbent polymers."

25. In the ITC Case, I also understand that Patent Owner proposed that a POSITA would have had "a bachelor's degree in mechanical engineering, industrial design, or equivalent, with at least one year of relevant experience designing projectile launching systems but would also be a member of a team, which would include a person with a bachelor's in materials science, chemistry, or equivalent (e.g., chemical engineering), or has at least one year experience working with materials for use in consumer products."

Dr. Courtney Decl., Ex. 1037, Pars. 24, 25

Dr. Courtney Has Multiple Engineering Degrees

7. I hold a Ph.D. in Medical Engineering and Medical Physics from a joint program between Harvard University, Harvard Medical School, and the Massachusetts Institute of Technology (MIT), a M.S. in Engineering Sciences from Harvard University and a B.S. in Engineering Mechanics from Michigan State University. I am a Certified Abbreviated Injury Scale Specialist (CAISS), a

Dr. Courtney Decl.., Ex. 1037, Par. 7

Dr. Courtney Can Testify That A POSITA Knew Basic Principles Of Physics

27. In my opinion, the education and degree of a POSITA (under both parties' definitions) would have provided the POSITA with the knowledge and understanding of basic principles of physics and mechanics. The physics principles of kinetic energy, conservation of energy, the relationship between force and change in kinetic energy, momentum, and the relationship between impact force and change in momentum (an application of Newton's Second Law of Motion) are introduced in high school physics courses. In college, the physical principles and mathematical tools to consider the injury potential of small, low-velocity projectiles are taught in the first semester of college physics and in the first mechanics of materials course for engineers (e.g., Ex. 1039, Sections 5.3, 5.5, Ex.1040, section 11.7). Considering

Dr. Courtney Decl., Ex. 1037, Par. 27

Dr. Courtney Can Testify That Dr. Kudrowitz Ignored Basic Principles Of Physics

75. Dr. Kudrowitz does not consider the deformation, fragmentation, and scattering of fragments of SAP projectiles. These properties play a crucial role in determining the amount of kinetic energy that contributes to the projectile's ability to cause injury.

76. Because Spitballs "[w]ill bounce and/or explode into mushy parts on impact (depending on the force you throw them)" (Ex. 1002, p. 15), it is my opinion that prior to 2010, a POSITA would have known that SAP ammunition (Spitballs) was a safer ammunition than hard plastic airsoft ammunition and was less likely to cause injury.

Dr. Courtney Decl., Ex. 1037, Pars. 75, 76

PO's Arguments Regarding Ex. 1044 (Berger) Miss The Point

be larger than the first.) Figure 20f is an example of a completely flexible missile, which tends to bend on impact. The force stays at a very low level for some time, then suddenly increases to its maximum before dropping off. The sudden rise in force presumably coincides with the completion of the missile's bending phase. The energy expended in bending is no longer available for deforming the pad, hence the resulting maximum force is less than it would have been if the missile were rigid.

Ex. 1044, p. 18 (cited in '683 and '282 Patents Sur-Reply, Paper 33, pp. 7-9 and '255 Patent Sur-Reply, Paper 30, pp. 7-9)

Dr. Courtney Explained The Relevance Of This 1979 Article

Q. What conclusion do you draw from this comparison?

A. That the flexibility of the missile was a mechanism for managing the kinetic energy and reducing the kinetic energy that was applied to the target, as I said in paragraph 44.

Dr. Courtney Tr., Ex. 2121, p. 131:11-16

The ASTM Standards Support Petitioners' Motivation To Combine Theory

The ASTM Standards Require Resilient Ammo

4.21.1.3 Any rigid projectile fired from a toy that has a kinetic energy that exceeds 0.08 J (as determined by 8.15.1) shall have an impact surface(s) of a resilient material.

ASTM F963-07, Ex. 2119, p. 17

4.31.1; Ex.1036, p.113:8-20 (Dr. Kudrowitz testifying that the ASTM standard says, "if it [kinetic energy] exceeds a certain limit, then it [the projectile] ***has to have*** an impact surface of ***resilient material***."). Dr. Kudrowitz also admitted that resilient projectiles include those that can absorb the force of impact (*e.g.*, deform). *Id*. Spitballs' ability to deform, bounce and break into mushy parts makes it resilient. Ex.1037, ¶45. Contrary to PO's argument, the ASTM standards actually

'683 Patent Reply, Paper 24, p. 15; '282 Patent Reply, Paper 24, p. 15; '255 Patent Reply, Paper 23, pp. 14-15
(all citing Dr. Kudrowitz Tr., Ex. 1036, and Dr. Courtney Decl., Ex. 1037)

PO Argues That The ASTM Standard Teaches Away From Using Spitballs Because They Are Too Big

Petitioner is also wrong to suggest that ASTM F963–07, the standard for toys, supports the Peev-Spitballs combination, (Reply 15), merely because it requires that "rigid projectiles fired from a toy that has a kinetic energy that exceeds 0.08 J…shall have an impact surface(s) of a resilient material," (EX2119 p.17). Resilient or not, ASTM F963–07 cannot possibly support using Spitballs as ammunition because this toy safety standard forbids the use of projectiles, like Spitballs, "that would fit within the cylinder shown in Fig. 8 [(right)]." EX2119, p.17, p.10. The width and minimum depth of this small-parts cylinder are both greater than the 0.6" diameter of a hydrated Spitball (and any hypothetical 6 mm Spitball).

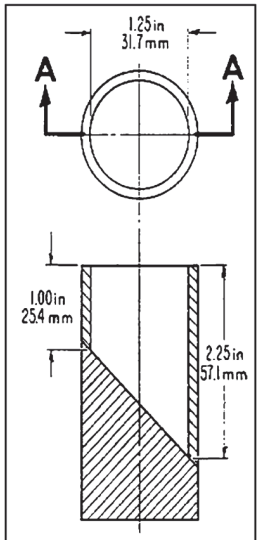

FIG. 8 Small Parts Cylinder

'683 Patent Sur-Reply, Paper 33, pp. 17-18
'282 Patent Sur-Reply, Paper 33, pp. 17-18
'255 Patent Sur-Reply, Paper 30, p. 17

PO Confuses Toy Standards For Babies And Toddlers With Toy Standards For Projectile Toys

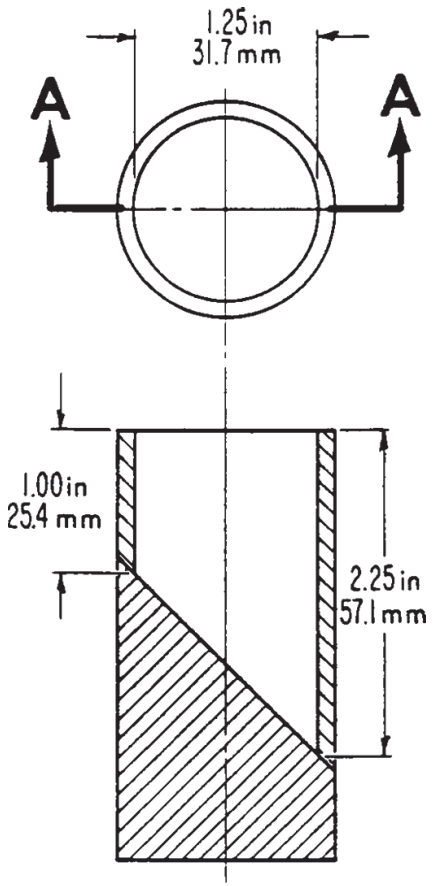

FIG. 8 Small Parts Cylinder

4.6 *Small Objects*—These requirements are intended to minimize the hazards from choking, ingestion, or inhalation to children under 36 months of age created by small objects.

4.6.1 Toys that are intended for children under 36 months of age are subject to the requirements of 16 CFR 1501. Criteria

ASTM F 963-07, Ex. 2119, pp. 9-10

PO Cannot Show A Nexus – PO's Objective Indicia Arguments Fail

PO Ties "More Distance" And "More Ammo" To Specific Claims

pp.563:9–20. As discussed below, these advantages—more distance and more ammo—are merits of practicing the '683 Patent's claim 5 (for more ammunition) and claims 8 and 9 (for more distance). EX1004 pp.442:14–443:11, 446:21–447:6,

'683 Patent Response, Paper 19, p. 46

pp.563:9–20. As discussed below, these advantages—more distance and more ammo—are merits of practicing the '282 Patent's claim 8 (for more ammunition) and claims 19 and 20 (for more distance). EX1004 pp.442:14–443:11, 446:21–

'282 Patent Response, Paper 19, p. 46

"More Distance" And "More Ammo" Are Unclaimed Features

But this is not the test for nexus. "Evidence of commercial success, or other secondary considerations, is only significant if there is a nexus between the ***claimed*** invention and the commercial success." *Ormco*, 463 F.3d at 1311-12. "[I]f the commercial success is due to an ***unclaimed feature*** of the device, the commercial success is ***irrelevant***." *Id.* at 1312.

'683 Patent Reply, Paper 24, p. 22; '282 Patent Reply, Paper 24, p. 22

The Claims Do Not Require "More Distance" Or "More Ammo"

Here again, any commercial success due to the ***unclaimed*** "more distance" feature is legally irrelevant under *Ormco*. *See also* *Lectrosonics, Inc.* *v. Zaxcom, Inc.*, IPR2018-01129, Paper33 (PTAB Jan. 24, 2020) (precedential). In *Lectrosonics*, the PTAB found that "Patent Owner has ***not demonstrated a nexus*** exists between the evidence presented and the ***merits*** of the claimed invention because the evidence is directed to ***features that are not required*** by the claims." *Id.*, p.34. There, the secondary considerations evidence was directed toward the "feature of fixing dropouts by replacing data", but this feature was "not required" by the issued claims. *Id.* The Patent Owner therefore amended the issued claims to add this feature so that the secondary considerations would be, and were eventually considered, for the amended claims. *Id.*, pp.64-65.

'683 Patent Reply, Paper 24, pp. 23-24
'282 Patent Reply, Paper 24, p. 24

WBIP Follows *Ormco*

Specifically, in *WBIP, LLC v. Kohler Co.,* 829 F.3d 1317 (Fed. Cir. 2016), the Federal Circuit reaffirmed that any allegation of nexus can be rebutted if it does not comply with *Ormco*:

> The presumption of ***nexus is rebuttable*** ... ***Ormco*** *Corp. v. Align Tech., Inc.*, 463 F.3d 1299, 1312 (Fed. Cir. 2006) (holding that evidence that commercial success was due to ***unclaimed*** or non-novel features of device "***clearly rebuts*** the presumption that ... success was due to the claimed and novel features").

WBIP, 829 F.3d at 1329. Likewise, neither *In re Natural Alternatives, LLC,* 659 F.

'683 Patent Reply, Paper 24, pp. 26-27; '282 Patent Reply, Paper 24, p. 27

Natural Alternatives Has Nothing To Do With Unclaimed Features

In re Natural Alternatives, LLC

"The PTO's singular response to Natural's evidence of objective indicia is that Natural failed to demonstrate a nexus between the asserted objective indicia and the specific advantages of the claimed invention over the prior art. Appellee Br. at 36-37 (citing *In re GPAC Inc.*, 57 F.3d 1573, 1580 (Fed. Cir. 1995). ***The PTO correctly notes that '[i]f commercial success is due to an element in the prior art, no nexus exists.'*** *Tokai Corp. v. Easton Enterprises, Inc.*, 632 F.3d 1358, 1369 (Fed. Cir. 2011). Here, the PTO does not dispute that GEOMELT® is an embodiment of the claimed invention. Appellee Br. at 36-37. ***The PTO's arguments on the lack of a nexus thus rise and fall with its arguments that the claimed invention has no advantages over the prior art.*** As discussed above, however, the prior art merely taught the use of molasses in general, not DSBM in particular, to deice road surfaces."

In re Natural Alternatives, LLC, 659 F. App'x 608, 615 (Fed. Cir. 2016)
(cited in '683 Patent Sur-Reply, Paper 33, p. 23; '282 Patent Sur-Reply, Paper 33, p. 23)

Volvo Has Nothing To Do With Unclaimed Features

Volvo Penta of the Americas, LLC v. Brunswick Corporation

"At oral argument, counsel for the ***USPTO argued that*** to the extent Volvo Penta identified ***these claim elements*** as unique characteristics of the claimed invention, they ***already existed in the prior art***. Oral Arg. at 18:55-20:43 . . . But the Board did not rely on this argument in reaching its decision. *See generally Decision* at *26-28. We therefore cannot adopt it as a basis to affirm."

Volvo Penta of the Americas, LLC v. Brunswick Corporation, 81 F.4th 1202, 1212 (Fed. Cir. 2023)
(cited in '683 Patent Sur-Reply, Paper 33, pp. 23-24; '282 Patent Sur-Reply, Paper 33, pp. 23-24)