(19) Europäisches Patentamt
European Patent Office
Office européen des brevets

(11) EP 1 853 044 B1

(12) EUROPEAN PATENT SPECIFICATION

(45) Date of publication and mention of the grant of the patent:
14.01.2009 Bulletin 2009/03

(51) Int Cl.:
H04L 29/08 *(2006.01)*

(21) Application number: **06113378.1**

(22) Date of filing: **02.05.2006**

(54) **Push framework for delivery of dynamic mobile content**

Push-Architektur zur Zustellung von dynamischen mobilen Inhalten

Structure de Push pour distribution de contenus mobiles dynamiques

(84) Designated Contracting States:
AT BE BG CH CY CZ DE DK EE ES FI FR GB GR HU IE IS IT LI LT LU LV MC NL PL PT RO SE SI SK TR
Designated Extension States:
AL BA HR MK YU

(43) Date of publication of application:
07.11.2007 Bulletin 2007/45

(73) Proprietor: **Research In Motion Limited**
Waterloo, Ontario N2L 3W8 (CA)

(72) Inventor: **Shenfield, Michael**
Richmond Hill,
Ontario
L4C 3S9 (CA)

(74) Representative: **Rickard, David John**
Ipulse
26 Mallinson Road
London
SW11 1BP (GB)

(56) References cited:
EP-A- 1 119 135 **EP-A- 1 555 793**

- **HUANG Y-W ET AL: "A bandwidth-sensitive update scheduling method for Internet push" DISTRIBUTED COMPUTING SYSTEMS, 1998. PROCEEDINGS. 18TH INTERNATIONAL CONFERENCE ON AMSTERDAM, NETHERLANDS 26-29 MAY 1998, LOS ALAMITOS, CA, USA,IEEE COMPUT. SOC, US, 26 May 1998 (1998-05-26), pages 303-310, XP010284011 ISBN: 0-8186-8292-2**

Note: Within nine months of the publication of the mention of the grant of the European patent in the European Patent Bulletin, any person may give notice to the European Patent Office of opposition to that patent, in accordance with the Implementing Regulations. Notice of opposition shall not be deemed to have been filed until the opposition fee has been paid. (Art. 99(1) European Patent Convention).

SAMSUNG 1014

Description

[0001] The present method and system relate to dynamic content delivery in a mobile environment, and in particular to a generic dynamic content delivery architecture in which applications and content providers can be added without changing the architecture.

[0002] Users of mobile devices or mobile user equipment (UE) are increasingly becoming more sophisticated in terms of the functionality that they require from their mobile devices and the way that they access data from the mobile devices.

[0003] Dynamic content delivery allows users to have information or data pushed to them rather than having to go and seek out the data. Examples of data could include stock quotes, weather updates, traffic updates, dynamic wallpaper, ads, applications or other data desirable to a user.

[0004] Current technologies for mobile devices such as wireless application protocol (WAP) have the ability to push content; however, WAP requires websites to be rewritten to satisfy the wireless application protocol and provide users with a uniform site that does not change to accommodate a user's capabilities to view a site.

[0005] Other alternatives include SMS based push and broadcast or cell broadcast. In the broadcast case, delivery cannot be customized to the needs of a particular user or the capabilities of a particular device. These systems therefore have no intelligence associated with them. A better solution is required for mobile devices.

[0006] The present system and method preferably provide for a dynamic content delivery architecture and system that allows generic applications and content providers to be added to the system without the necessity to modify the architecture. Specifically, the present system and method allows for a mobile device to become a dynamic application platform in which applications can be added and content provided to the mobile device, where the architecture of the dynamic content delivery system does not limit the type of application that can be installed on the device nor the type of content that the device receives.

[0007] In one aspect of the present application, metadata is preferably provided and associated with the content to add intelligence to the content for various processing elements within the dynamic content delivery architecture. This architecture includes logical components that provide for content provision, service provision including push proxies, a wireless network, push client and client applications.

[0008] In a further aspect of the present application, metadata is preferably provided in a layered "enveloped" model for push content metadata. Content is wrapped with metadata that can be used for processing at each element within a push framework. The metadata for each successive element is layered, thereby allowing the processing element to extract only the metadata for that element. For example, a content package that includes metadata directed to a push proxy and a client application can include the content with a first level of metadata for the client application, and a second layer of metadata for the push proxy. Thereby, when the envelope reaches the push proxy, the metadata for the push proxy is extracted and applied to the content, and the modified content and metadata for the client application is passed to further processing element.

[0009] In another aspect of the present application, the metadata can be split into static metadata (also referred to herein as channel metadata) and dynamic metadata (also referred to herein as content metadata). Static metadata is established preferably at the time of registration of both the application and the content provider. However, the channel metadata can be established at a later time. The channel metadata specifies processing rules that are specific to the type of content that is being delivered and the application requirements for content type.

[0010] Dynamic metadata is conversely associated with the specific content being passed.

[0011] In another aspect of the present application, a plug-in registration model is preferably presented within the push framework. A generic push client and a push proxy are identified, each having various processing blocks or modules that allow these elements to process both content and metadata. These blocks can be directed to process either the content being passed, the metadata being passed or both the content and the metadata being passed.

[0012] Plug-in registration further preferably provides for the passing of service manifests and application manifests to allow the establishment of channel metadata between a content provider and an application. Specifically, service manifests can be used for registering a content provider with the push framework, and an application manifest can be used for registering an application with the push framework.

[0013] In another aspect of the present application, a method for pushing syndicated content is preferably provided which allows for the handling of data based on its priority and based on network factors including the cost for sending data, the type of network connected to or the users' preferences. An optional mixed push/pull model for syndicated content allows for either a push proxy to push content when network conditions become favorable or for a client to pull content when network conditions become favorable or when the user requires the content.

[0014] In order to accommodate various mobile devices, a further aspect of the present application preferably provides for content fragmentation for content, including non-linear content fragmentation. Non-linear content fragmentation includes augmenting the content with metadata allowing the data to be recomposed once it has been passed to the client.

[0015] These and other aspects will be identified in more detail with respect to the drawings.

[0016] The present application therefore preferably provides a push proxy for use in a generic dynamic content delivery

system comprising: a content provider registration service provider interface, said service provider interface adapted to register content providers with said push proxy server and to further receive channel metadata for the content providers; a channel metadata repository, said channel metadata repository adapted to store said channel metadata received from the content providers; a content metadata extractor and cache module, said content metadata extractor and cache module being adapted to extract metadata for said push proxy from a content and metadata envelope received from the content providers, said content metadata extractor and cache module further adapted to cache said metadata on said push proxy; a content fragmentation module, said content fragmentation module adapted to break a content and metadata envelope into segments; a deferred retrieval message store module, said deferred retrieval message store module adapted to store a content envelope or one or more segments from said content fragmentation module; a content expiry and replacement module, said content expiry and replacement module adapted to expire content stored in the deferred retrieval message store module or to replace content stored in the deferred retrieval message store module; a content dependencies module, said content dependencies module adapted to provide selection of push clients to advertise a service to; a push scheduler, said push scheduler adapted to schedule the pushing of a content envelope stored in the deferred retrieval message store module; and a subscription and rules module, said subscription and rules module adapted to maintain a subscription between an application and the content provider and maintain a list of rules for the subscription. The may be adapted to register only one content provider or to register multiple content providers. The push proxy may further comprise a content storage module for storing content and a service administration module for administering said push proxy.

[0017] The present application further provides a push clients for use in a dynamic content delivery architecture, the push client comprising: an application registration application provider interface adapted to register applications to said push client and further adapted to receive an application manifest for said applications, said application manifest containing channel metadata; a channel metadata repository adapted to store channel metadata received from said application; communication means, such communication means adapted to receive a content and metadata envelope from a push proxy; content metadata extractor and cache module, said content metadata extractor and cache module being adapted to extract metadata for said push client from said content and metadata envelope and further being adapted to cache said metadata on said push client; a deferred retrieval manager adapted to schedule retrieval of content from the push proxy not yet received by the push client; a content dependencies module adapted to reconstitute content previously broken into segments; a content expiry and replacement module, said content expiry and replacement module adapted to expire content stored at said push client or to replace content stored at the push client; an update notification block, said update notification block adapted to work with said applications to notify the applications that new content is waiting for them; a subscription management block, said subscription management block adapted to manage subscriptions between the application and a content provider; a pull broker adapted to pull content when required by the push client, said pull broker being driven by aid deferred retrieval manager, wherein said push client is adapted to register generic applications and receive generic content type from the content provider. The push client may be adapted to register with only one application or to register with multiple applications. The push client may further comprise a content storage module for storing content and a service administration module for administering said push client.

[0018] The present application preferably provides a method of pushing generic dynamic content via a push proxy of a generic dynamic content delivery system, the method comprising: obtaining a service manifest at the push proxy, the service manifest corresponding to a dynamic content push service provided by a service provider; registering a content provider with the generic dynamic content delivery system by registering the content provider with the push proxy having a content provider registration interface to receive channel metadata from the content provider; storing said channel metadata in a channel metadata repository associated with the push proxy; receiving a content and metadata envelope at the push proxy from the content provider; and processing the content and metadata envelope in accordance with the channel metadata. The method may comprise receiving said channel metadata from the content provider. The method may further comprise administering said push proxy.

[0019] The present application preferably provides a method of pushing generic dynamic content via a push client of a generic dynamic content delivery system, the method comprising: obtaining an application manifest at a push client, the application manifest corresponding to an application processing dynamic content pushed thereto; registering the application with the generic dynamic content delivery.system by registering the application with the push client having an application registration interface, said application manifest containing channel metadata; storing said channel metadata in a channel metadata repository associated with the push client; receiving a content and metadata envelope at the push client via a push proxy; and processing the content and metadata envelope in accordance with the channel metadata. The method may further comprise receiving said channel metadata from said application. The method may further comprise notifying said application of new content waiting therefore and managing subscriptions between the application and the content provider. The method may further comprise any of administering said push proxy, performing background updates for applications not connected with said push client, storing content for said application at a specific storage vocation, notifying said application that data has been stored at the specific storage location, and sending said content and metadata envelope to said application.

BRIEF DESCRIPTION OF THE DRAWINGS

[0020] The present application will be better understood with reference to the drawings, in which:

Figure 1 is a block diagram of a basic architecture for a dynamic content delivery system;
Figure 2 is a block diagram showing alternative architectures of the dynamic content delivery system of **Figure 1;**
Figure 3 is the block diagram of **Figure 1** showing content and metadata flow;
Figure 4 is a block diagram showing a push proxy that can be used in association with the present system and method;
Figure 5 is a block diagram showing a push client that can be used in association with the present system and method;
Figure 6 is a block diagram showing a multilayer envelope model of content and metadata;
Figure 7 is the block diagram of **Figure 6,** showing processing steps dynamic metadata for each envelope;
Figure 8 is the block diagram of **Figure 6,** additionally showing processing using static and dynamic metadata;
Figure 9 is a block diagram showing a registration process for an application to a single shared push client;
Figure 10 is a block diagram showing a registration process of an application to a push container managing a pool of push clients;
Figure 11 is a block diagram showing an application registering to a content processor and socket listener;
Figure 12 is a block diagram showing a content provider registering with a single shared push proxy;
Figure 13 is a block diagram showing a content provider registering with a push container managing a pool of push proxies;
Figure 14 is a flow diagram showing registration messages between a content provider and client application;
Figure 15 is a block diagram showing interaction during registration between a push client and push proxy;
Figure 16 is a block diagram showing interaction during registration between a push proxy and a content provider;
Figure 17 is a flow diagram showing the flow of content and metadata between a content provider and processing elements;
Figure 18 is block diagram showing an exemplary transform application for content;
Figure 19 is a block diagram of a content syndication model;
Figure 20 is a block diagram of a linear fragmentation process;
Figure 21 is a block diagram of a non-linear fragmentation process; and
Figure 22 is a block diagram of an exemplary mobile device that could be used in association with the present method and system.

DESCRIPTION OF PREFERRED EMBODIMENTS

[0021] Reference is now made to Figure 1. A generic push system for delivering dynamic content to a client application is illustrated. A system of Figure 1 is a simplified system and shows logical components that need to be in a dynamic content delivery architecture; however, one skilled in the art will appreciate that other components could exist or that various components could be grouped together.

[0022] Architecture 100 includes a content provider 110. Content provider 110 is arranged to provide dynamic content to users that are subscribed with content provider 110. Examples can include, for example, a website selling books. A user may register with content provider 110 to obtain a list of newly released books within specified genres. Other examples could include news sites which might provide headlines to users on a periodic basis, traffic sites which might provide up-to-date traffic information to users during certain periods of the day, stock market sites which could provide updated stock quotes or currency exchange rates to users, among others.

[0023] As will be described in more detail below, content provider 110 registers with a service provider 120 in order to allow clients of the service provider to receive content from content provider 110. Service provider 120 includes a push proxy 122 that acts as a proxy for a client or a client application and provides a destination for content provider 110 to send content.

[0024] Service provider 120 communicates over wireless network 130 with a push client 140 that is located on a mobile device. Push client 140 will be described in more detail below. Push client 140 receives the content that is being delivered from content provider 110 and can communicate the content with a client application 150, which ultimately consumes the content.

[0025] Within the present specification, reference to content provider 110, service provider 120, push proxy 122, wireless network 130, push client 140 or client application 150 is a reference back to the architecture of Figure 1.

[0026] Referring to Figure 2, it will be appreciated by those skilled in the art that the components of Figure 1 are merely logical components and are not necessarily separate physical components. Figure 1 illustrates a generic architecture in which one content provider 110, one push proxy 122, one push client 140 and one client application 150 exist. Alternatives are illustrated in Figure 2.

[0027] Specifically, a first alternative architecture 210 includes multiple content providers 110 communicating with a

push proxy 122. Push proxy 122, as in the architecture of Figure 1, communicates over wireless network 130 with a push client 140. Further, multiple client applications 150 exist in architecture 210. This is therefore an N-1-1-N system having multiple content providers 110 and multiple client applications 150.

[0028] Architecture 220 of Figure 2 includes one content provider 110 communicating with and registered to push proxy 122. Further, push proxy 122 communicates over wireless network 130 with multiple push clients 140. Each push client 140 communicates with a client application 150. Architecture 220 therefore groups the logical components of a client application 150 and a push client 140 and is an N(1-1)-1-1 system.

[0029] Architecture 230 of Figure 2 has multiple push proxies 122, each communicating with a content provider **110.** Each push proxy and content provider combination **232** communicates over wireless network **130** with a generic push client **140,** which in turn communicates with client application **150.** This is an 1-1-N(1-1) system.

[0030] In architecture **240** of **Figure 2,** a content provider **110** and push proxy **122** grouping **232** communicates over wireless network **130** with a generic push client **140** and client application **150** combination. This is therefore an N(1-1)-N (1-1) system.

[0031] As will be appreciated by those skilled in the art, other alternatives are possible. The above shows various logical components, which can be in separate physical components or grouped together. For example, a push client can be imbedded in an application, common shared clients can be used by multiple applications or other alternatives.

[0032] Reference is now made to **Figure 3.** In order to add intelligence to a system, content is associated with a metadata. Metadata, in this case, is defined as data that can be used by a processing element to manipulate the content. As will be appreciated, a generic push system requires metadata to allow various content providers and applications to exist within the system. The metadata can be in various forms, including processing parameters or rules, or a processing handler, code or reference provided directly or a link to a processing handier, code or rules in another location,

[0033] As can be seen in **Figure 3,** content passes from content provider **110** to client application **150** and is illustrated by arrow **310.** Metadata, which provides instructions to various components within the architecture **100** can also pass between components within architecture **100,** usually along with the content. For example, arrow **320** illustrates metadata that originates at the content provider and is transparent to the delivery system until it reaches a client application **150.**

[0034] Arrow **330** shows metadata created by content provider **110** that is intended for the push client **140,** and thus only flows to generic push client **140.**

[0035] Arrow **340** illustrates metadata generated by service provider 120 and intended for the push client **140,** and thus is first associated with the content at the push proxy **122** and stripped from the content at generic push client **140.** Examples of where this could occur include agreements between a user and a service provider regarding a billing plan and the level of service to be provided, where the service provider can use the metadata to limit the services available or provide enhanced services.

[0036] The flow of metadata and the role of metadata is described in more detail below.

[0037] Reference is now made to Figure 4. Figure 4 illustrates a detailed exemplary push proxy 410 which can be used in association with the present system and method. As will be appreciated by those skilled in the art, push proxy 410 could be the same as push proxy 122 from Figures 1 and 2.

[0038] Push proxy 410 of Figure 4 includes various elements that enable push proxy 410 to operate in a generic push environment. This facilitates flexibility since the push proxy is not limited to interaction with specific content providers or push clients, but instead can be adapted to a dynamic environment. The elements described below for push proxy 410 are preferable have within push proxy 410, but the elements are not exhaustive, and other elements are possible. Further, certain elements may be omitted from push proxy 410, with the remaining elements still able to perform generic push services.

[0039] Push proxy 410 includes content providers 412 registered to it. Content providers 412 register with a content provider registration service provider interface (SPI) 420. As is described in more detail below, it is desirable in this registration that the content provider 412 includes certain information for the channel being established, referred to herein as channel metadata. Content providers 412 can be the same as content providers 110 of Figure 1.

[0040] Push proxy 410 further includes a service administration block 430 to administer the push proxy service.

[0041] Push proxy 410 includes various modules to deal with both the content and the metadata associated with that content. A first module is the message broker and delivery queue 440, which is a subsystem that consumes messages from content provider 412 and manages the content delivery queue. As will be appreciated by those skilled in the art, not all content for all client applications can be delivered at once and a delivery queue needs to be established in order to deliver the content in due course. For example, a device may be out of coverage and content may need to be stored.

[0042] Push proxy 410 further includes a flow control management block 442. Flow control management block 442 allows for the control of content flow. For example, a mobile station with limited space may only be able to receive a certain amount of information. In this case, the mobile device, through a push client 140 as illustrated in Figure 1, may ask push proxy 410 to stop the flow of data to push client 140. The flow control management block 442 deals with this.

[0043] Alternatively, the mobile device can be off-line. Flow control management block 442 stops and starts the flow of data to push client 140 when content cannot be delivered as received by push proxy 410.

[0044] A further component of push proxy 410 is push agents 444. Push agents 444 are responsible for sending data to clients.

[0045] As will be appreciated by those skilled in the art, blocks 440, 442 and 444 deal with messaging only, and are not metadata related. In other words, the blocks handle the content of the messages, but not any metadata associated with the content.

[0046] A further component of push proxy 410 is the content metadata extractor and cache block 450. Content metadata extractor and cache block 450 operate on enveloped content metadata. Specifically, in the envelope model of metadata system, which is described in more detail below, each logical component within the system can have metadata associated with content processing. This metadata allows the logical component to perform actions on the content. Each logical component thus needs to be able to extract the metadata that is associated with it.

[0047] Content metadata extractor and cache block 450 is responsible for extracting metadata that is associated with push proxy 410 and for caching this metadata. The caching function allows optimization by eliminating the need to pass identical metadata in subsequent content envelopes from the same content provider. The extraction and caching of metadata are described below.

[0048] Deferred retrieval message store block 452 is used when it is not effective to deliver content, or parts of it, to a client application. The deferred retrieval message store block 452 can be used to store content that is not delivered to the client until it is effective to send the content, or until the content is pulled by the client. The deferred retrieval message store could also be used to cache auxiliary content that could be optionally send to or pulled by the client depending on client application navigation through already delivered content.

[0049] The purpose of deferred retrieval message store block 452 is better explained below with reference to Figure 19 and 21. By way of example, deferred retrieval message store block 452 may be used is the case where a user has requested location information, such as a restaurant close to the location of the user. The content provider or the service provider may have a model of providing information where advertisers can pay to add their information to search requests. Thus, the user that's requesting restaurant information for a location may also have information about stores, golf courses, gyms or other services close to their location attended to their request. A content provider bundles the restaurant information requested with the additional information and passes it to push proxy 410.

[0050] Push proxy 410 can, based on the metadata provided, create a content package to send to the client. The content package could include the information requested by the client, as well as a digest or summary of related information that the user may be interested in. The summary is sent to the user, but the deferred retrieval message store block 452 stores the actual data that was received from content provider 110. Thus, if in the future the user wishes to obtain more detailed information about information within the digest, this information is already stored at push proxy 410.

[0051] An alternative use for deferred retrieval message store block 452 is in the case where a user cannot accept the entire content at once. For example, if it is not feasible or economical to send all content to device, part of the content can be stored until a later time, when it can be pulled by the client or pushed when predefined rules are met. These rules can be specified by the network or service conditions by certain network or service conditions being satisfied. This is described in more detail with reference to Figure 19 below.

[0052] Push scheduler 454 schedules delivery slots for clients. As described above, in some situations it may not be efficient to push all of the content at once. Push scheduler 452 can determine that it will push some information immediately and the rest according to a predefined schedule. Also, push scheduler 454 may use nature of the content to determine when the content should be pushed. Specifically, metadata may indicate that some content is a high priority or has an expiry that is limited in time, and this content may be pushed immediately, whereas content that has been indicated to have a low priority or with no expiry may be pushed later when conditions for passing data are more favorable.

[0053] As will be appreciated by those skilled in the art, blocks 450, 452 and 454 deal with both the content of the message and the metadata that is associated with the message.

[0054] Subscription and rules block 460 tracks applications that are registered to receive a service and monitors rules on how to handle particular content being delivered. Content is typically delivered based on a subscription by the client or on behalf of the client. The user, for example if they want a particular service, can actively request subscriptions. Subscriptions can be made on behalf of a user, for example, if the user has signed an agreement with their service provider 120 to receive a benefit for a service. This could include the case where a user receives a preferred rate as long as the user agrees to receive a certain number of advertisements each day. In this case, the service provider 120 may make the subscription to the advertisement provider on behalf of the client.

[0055] When an application is deleted on a mobile device or when the application unregisters from a subscription, subscription and rules block 460 can unsubscribe that user.

[0056] Content dependencies block 462 is used by push proxy 410 to advertise services that a mobile device user can utilize. Thus, if a mobile device user does not have a screen or bandwidth or memory sufficient for the service, content dependencies block 462 could block the advertisement of that service to the user.

[0057] Content fragmentation block 464 is used to fragment content. This could be used, for example, if the mobile device is unable to receive all of the content at once. Content fragmentation block 464 is used to break the content into

various components. It can be used in association with deferred retrieval and message store 452 to store fragmented content that has not yet been delivered.

[0058] Content expiry and replacement block 466 is used for two purposes. First, this block can be used to monitor subscriptions. Each subscription has an expiry time and when this expiry time is met, the subscription can be ended.

[0059] Also, content expiry and replacement block 466 can be used to monitor information. Certain content will have time limits on the validity of the information. For example, a traffic application used to monitor rush hour traffic will be very time dependent. If, for some reason, push proxy 410 is unable to deliver the content immediately to a mobile device, this content is stored in content storage 480 for future delivery. However, if the content is not delivered within a certain specified time period, then it could expire and not be delivered at all.

[0060] Similarly, content replacement deals with a situation where the information is being updated. For example, a client application that is receiving stock quotes may only want the latest stock quote. Thus, if the push proxy 410 is unable to deliver the stock quote to push client 140 and a subsequent stock quote is received from a content provider 110, metadata within the subsequent stock quote can indicate that it should be used to replace the previous stock quote. Replacement of stored information rather than adding all information to a delivery queue frees space within content storage 480.

[0061] Channel metadata repository 470 is used to store channel metadata, which is described in more detail below.

[0062] The above describes an exemplary push proxy 410 that can be used with the method and systems herein. The blocks and elements of push proxy 410 allow push proxy 410 to be used in a generic dynamic content delivery system where the type of content and handling of the content at an application can vary and is not predetermined.

[0063] Reference is now made to Figure 5. Figure 5 illustrates a push client 510 that can be used in association with the system and methods herein. Push client 510 can be the same as push client 140 from Figures 1 and 2.

[0064] As will be appreciated by those skilled in the art, a push client 510 that is to be used in a generic system in which the content and processing of the content is not predetermined should include blocks or modules that can be used to accommodate both the content and the metadata associated with the content. The blocks defined with regard to Figure 5 are not meant to be exhaustive, and other blocks could also exist within a push client 510. Further, the blocks within push client 510 can, in some instances, be omitted without restricting the functionality of the other blocks within push client 510.

[0065] A push client 510 services applications, and one or more applications 512 can register with push client 510. The application registration uses an application provider interface 514 as the interface for registration and application provider interface 514 can further be used to extract channel metadata for the application, as described in more detail below.

[0066] Push client 510 includes client administration 520 used to administer the push client 510.

[0067] As with push server 410 of Figure 4, push client 510 includes various blocks that deal with messaging, various blocks that deal with metadata, and various blocks that deal with both messaging and metadata.

[0068] Message broker and application queues 540 handle messages from push proxy 410 for delivery to applications 512. An application queue is a queue of messages for applications 512.

[0069] Flow control management block 542 is used to notify push proxy 410 of Figure 4 to stop pushing content or to resume pushing content. This can be used, for example, when the push client 510 has a limited amount of memory that it can accept pushed content. In this case, before the push content is consumed push client 510 needs to stop the flow of content from push proxy 410. Once the content has been consumed, flow control management block 542 can be used to start the flow of data again.

[0070] Push agents 544 within push client 510 are used to receive information from push proxy 410 of Figure 4.

[0071] As will be appreciated by those skilled in the art, message brokers and application queues 540, flow control management block 542, and push agents 544 deal exclusively with messaging and not with metadata.

[0072] Content metadata extractor and cache block 550 is used to extract dynamic metadata destined for push client 510. As indicated above with reference to push proxy 410 of Figure 4, any of the processing elements in the dynamic content delivery architecture could have metadata destined for them and this metadata needs to be extracted. Thus metadata destined for push client 510 is extracted by content metadata extractor and cache block 550.

[0073] Further, the content metadata extractor and cache block 550 is preferably adapted to cache metadata. Metadata for push client 510 that does not change between a first content package and a second content package does not need to be passed, saving processing time at push client 510 by not requiring the extraction of this metadata, and further saving network resources by not requiring metadata for push client 510 to be passed over wireless network 130.

[0074] Deferred retrieval manager 552 is used for analyzing fragments of content that are received and putting the content together in the correct way. As described in more detail below, data can be either linear or non-linear. If the data is non-linear, then metadata is required in order to reconstitute it, and this is done by deferred retrieval manager 552. The deferred retrieval manager 552 also is adapted to analyse a digest of information available in the deferred retrieval store 452 of push proxy 510 and drives the content pull broker 554 (described below) to retrieve this information when required by user. This includes predictive retrieval when content navigation enters a certain branch of the content structure

graph or when bandwidth or cost conditions are satisfied

[0075] Content pull broker 554 is used in a push/pull model where the push client 510 is also able to pull content in certain situations. Such situations are described below in more detail with reference to Figure 19.

[0076] As will be appreciated by those skilled in the art, content metadata extractor and cache 550, deferred retrieval manager 552 and content pull broker 554 deal both with messaging content and with metadata.

[0077] Subscription management block 560 is the same as subscription and rules block 460 of Figure 4. Specifically, subscription management block 560 is used to manage subscriptions. If an application de-registers or is deleted from a mobile device then subscription management block 560 ends the subscription. The subscription management block 560 can also re-subscribe on behalf of a client application when subscription channel expires.

[0078] Update notification block 562 works with client applications and is used to notify the applications that new content is waiting for them. This can be done in one of three ways:

a. A first way that update notification block 562 can notify an application 512 is for push client 510 to send the content to application 512 directly.

b. A second way that update notification block 562 can notify applications 512 of new content is to store the content in content storage 580 and to optionally notify applications 512 that content is waiting. Notification in this case is optional. Specifically, if an application 512 knows that information destined for it is stored within a specific memory block, one option for the application discovering that is has new data is to periodically poll the memory location to see whether there has been something written to it. Alternatively update notification block 562 can send a message to application 512 indicating that it has new data an possibly the location that the data is stored.

c. A third way that update notification 562 can notify applications 512 of new content is to store the content internally and notify the application. The application can then call on the push client to retrieve the content.

[0079] Content dependency block 564 is the same as content dependency block 462 of Figure 4, and can determine whether to advertise the service to the mobile device.

[0080] Content expiry and replacement block 566 is the same as content replacement and expiry block 466 of Figure 4. The expiry of content and replacement of content can thus be handled at push client 510 in addition to the push server or push proxy.

[0081] Channel metadata repository 570 is used to store channel metadata for application 512.

[0082] Background update processing module 575 is used for performing updates when an application 512 is unavailable. The background update allows, for example, the replacement of data with newer data inside the application storage. Thereafter, when a user starts the application, the data displayed by the application is correct and updated.

[0083] Background update processing module 575 uses processing rules translate content into a format acceptable for an application. It can execute and process content in content store 580.

[0084] By way of example, a task list that is updated for a contractor overnight could have tasks pushed to it. The task application is not started during this time, and background update processing module 575 can be used to update the content for the task application. This could be done with code for handling an extensible mark-up language (XML) file, and could exist on the device in a file called "handler.exe". Background update processing block 575 on push client 510 can run handler.exe, passing the XML document has a parameter. The handler then constructs the task into the application's internal format.

[0085] Once the background update processing block 575 of push client 510 constructs the task into the application internal format, it then can read the task into the task list from content storage 580 and append the new task to the list. It then can store the modified back to content storage 580 for when the task application next connects to push client 510.

[0086] Figure 5 therefore illustrates a push client 510 that can be used in a generic dynamic content delivery system, where content and processing of the content is dynamic and not predetermined. The blocks described above with reference to the push client 510 of Figure 5 are used to accommodate the dynamic nature of the system.

[0087] As indicated above with reference to Figure 3, content is associated with metadata to provide intelligence for the processing of the content. In accordance with the present method and system, metadata can be divided into two types of metadata. Specifically, static (channel) metadata and dynamic (content) metadata.

[0088] Due to the unlimited possibilities of types of content providers and applications, metadata is critical in order to build generic systems. The only way to handle the specific type of content is through metadata.

[0089] Static metadata is metadata that provides rules on how to process specific types of content. Static metadata can be broken into various levels of abstraction and include for example structural information about the content itself. For example, a Real-time Simple Syndication (RSS) document could be delivered with an RSS 2.0.XSD structure, and all content from that content provider will be delivered with this structure.

[0090] A further level of abstraction for static metadata includes the provision of processing rules for content subtype. This could be application specific. Thus, for example, a financial news application indicates that data should be extracted from a financial news RSS stream, stored in a predefined location, and that the application should be notified about the

arrival of the information. The application always requires content destined for it to be handled in this way.

[0091] The static metadata (also referred to herein as channel metadata) stays the same throughout the subscription between the application and the content provider, and thus the static metadata can be established once for each element within the architecture and for each content delivery channel. In one embodiment this is done at the time of registration of the application or the content provider.

[0092] Dynamic metadata is metadata that is associated with a particular piece of content. For example, expiry information associated with a particular piece of data or replacement rules and information associated with a particular piece of data (i.e. document K replaces document L).

[0093] As indicated above with reference to **Figures 4** and **5,** each processing entity can receive both static and dynamic metadata that is directed at that processing entity. Thus push proxy **410** uses the content metadata extractor and cache **450** to extract the dynamic metadata, and content expiry and replacement block **466** is used to replace undelivered content with newer content received at push proxy **410.**

[0094] Reference is now made to **Figure 6. Figure 6** illustrates a multilayer envelope model for content metadata.

[0095] A push proxy **410** receives a push envelope **610** that includes content processing metadata for the proxy server **612** and a push client envelope **614.** The push proxy **410** extracts content processing metadata **612** and uses this metadata to process push client envelope **614.** Metadata **612** dictates to push proxy what to do with the push client envelope **614.**

[0096] Push client envelope 614 is passed to push client 510 where it is broken into a content envelope 620 and a content processing metadata 622. Content processing metadata 622 is used by push client 510 to process the content envelope 620. For example, this can be used to instruct push client 510 to perform replacement of previously delivered content envelope 620 with the latest envelope if client application 150 is only interested in the latest version of the content.

[0097] Content envelope 620 is passed to client application 150. Content envelope 620 includes content processing metadata 630 for the application and the content payload 632 that is to be consumed by client application 150.

[0098] As will be appreciated by those skilled in the art, the nesting of envelopes in accordance with Figure 6 provides for a rich dynamic environment in which processing can occur at any processing element of the architecture and which the content provider 110 can specify how specific content is to be dealt with. In one embodiment, metadata directed to a particular logical element is opaque to other processing elements.

[0099] Alternatively, the service provider 120 can also add metadata at push proxy 410 for processing at push client 510 or client application 150.

[0100] Referring to Figure 7, this figure shows the envelope model of Figure 6 and the steps that each processing element takes with an envelope. As illustrated in Figure 7, push proxy 410 first extracts the metadata from push envelope 610. This is done in step 710.

[0101] In step 712, push proxy 410 uses the metadata to process the push client envelope 614. In step 714, push proxy 410 delivers the push client envelope 614 to push client 510.

[0102] Similarly, push client 510, in step 720 extracts the content processing metadata 622 from push client envelope 614. In step 722, push client 510 uses the content processing metadata 622 on content envelope 620. In step 724, the push client 510 delivers content envelope 620 to client application 150.

[0103] in step 730, client application 150 extracts the content processing metadata 630 and in step 732 uses the content processing metadata 630 on content payload 632.

[0104] Referring to Figure 8, this figure shows the method as illustrated in Figure 7 with the additional step of the use of static or channel metadata. Specifically, after the metadata has been extracted in step 710 from push envelope 610, the push proxy 410 next uses the static channel metadata to process the push client envelope in step 810. In step 712, push proxy 410 next processes the content processing dynamic metadata 612. Push proxy 410 next delivers the push client envelope 614 in step 714.

[0105] Similarly, push client 510 extracts the content processing metadata 622 in step 720. Push client 510 then uses the channel metadata in step 820 on the content within content envelope 620. Push client 510 then, in step 722, uses the dynamic content metadata in content processing metatadata 622 prior to delivering content envelope 620 to client application 150 in step 724.

[0106] Client application 150 first extracts, in step 730, content processing metadata 630. It then uses the channel metadata in step 830 on content payload 632. Client application 150 then uses, in step 732, content processing metadata 630 on content payload 632.

[0107] As will be appreciated by those skilled in the art, the above model therefore allows for both static metadata to be applied for the channel along with dynamic metadata that is associated with the particular content being sent.

[0108] Reference is now made to Figure 9. As will be appreciated from Figure 5, push client 510 can serve multiple target applications 512 on a mobile device. An efficient runtime registration mechanism is required where applications can register with the dynamic content delivery framework without interrupting service for other applications.

[0109] Referring to Figure 9, push client 510 includes three applications, specifically applications 910, 912 and 914 that are already registered with the push client. As will be appreciated, the plug in model is important because new

devices can allow unlimited application types to be installed on the device. Further, applications can be installed dynamically, leading to a mobile device becoming an application platform. Because the device can be an application platform, it must be capable of dynamically incorporating new applications.

[0110] As seen in Figure 9, application 916 wants to register with push client 510. Application 916 includes an application manifest 918 that, in a preferred embodiment, provides the channel metadata for the application. Specifically, application manifest 918 provides information to push client 510, and ultimately push proxy 410 and content provider 110 from Figure 1 with the static metadata for the application. This can include, but is not limited to, what type of content the application expects, how the content will be delivered, whether the application needs notification, or other channel information that would be evident to those skilled in the art having regard to the present system and method.

[0111] Application 916 therefore registers with push client 510, providing application manifest 918 to establish a channel to a content provider for servicing application 916.

[0112] Referring to Figure 10, an alternate model could be the model described with regard to architecture 220 of Figure 2. Specifically, in the model of Figure 10, a client application 150 is paired with a push client 140. Each of the client application 150/push client 140 pairs are coordinated with a push container 1010.

[0113] When application 1020 wishes to register with push container 1010, a client 140 is created, or if it already exists is used, by push container 1010. Further, in registration, the application 1020 provides an application manifest 1030 to push container 1010, thereby providing channel metadata (static metadata) for application 1020.

[0114] An alternative illustration of Figure 10 is shown in Figure 11. Specifically, a push container 1110 manages/maintains a pool of push clients. When an application registers with the container it obtains a dedicated push client 510, which in the simple case could be represented by a pair of a socket listener 1130 and content handler. The push client is returned to the pool when the application unregisters from the container (and content delivery service) or is deleted from the device.

[0115] Push container 1110 includes sockets 1120 for communication. Further, push container 1110 includes socket listeners 1130 and content processors 1140 assigned to a particular socket.

[0116] As seen in Figure 11, various content processor and socket listener pairs are used by previously registered applications 150.

[0117] When a new application 1150 wants to register with push container 1110, a new content processor and socket listener 1120 and 1130 are assigned to service application 1050.

[0118] The above therefore provides for a generic push framework in which a client application 150 that is new can be implemented and registered with a push client 510 or push container 1010 or 1110, thereby allowing the device to become an application platform capable of dynamically incorporating new applications. The passing of an application manifest 1030 or 918 from Figures 9 and 10 above allows for the establishment of channel metadata, thereby allowing the content to be processed according to the application's requirements.

[0119] Referring to Figure 12, content providers 110 similarly need to register with a push proxy 410. As seen in Figure 12, push proxy 410 includes three content providers, namely, 1210, 1212 and 1214, already registered with push proxy 410. Content provider 1216 desires to register with push proxy 410.

[0120] Similarly to the application manifest 918 illustrated in Figure 9 provided by an application 916 when registering with push client 510, content provider 1216 includes a service manifest 1218 that is passed to push proxy 410 when content provider 1216 registers. Service manifest 1218 includes information concerning the type of information that the content provider will provide, how often it provides this information, the format of the information, and any other information that is useful for the service or for advertisement of the service. Other information is possible.

[0121] Push proxy 410 thus uses service manifest 1218 to establish channel (static) metadata for content provider 1216.

[0122] Referring to Figure 13, an alternative embodiment, represented by architecture 230 of Figure 2, is to have a push container with a number of push proxy 122 and content provider 110 pairings. As with Figure 12, various applications could already be registered with push container 1310, and in the example of Figure 12, applications 1312, 1314 and 1316 are already registered with push proxies 1313, 1315 and 1317 respectively.

[0123] A new application 1320 wants to register with push container 1310. Thus, push container 1310 creates a new proxy (not shown) or uses an existing proxy (not shown) with which it associates content provider 1320. Further, content provider 1320 provides service manifest 1322 to describe the content that content provider 1320 will be providing, thereby allowing the establishment of channel metadata.

[0124] As will be appreciated by those skilled in the art, the embodiments of Figures 9 and 10 show two options for push clients, either with shared applications or with dedicated push clients per application. One skilled in the art will realize that other embodiments are possible. Similarly, with respect to Figures 12 and 13, a push proxy with multiple content providers registered to it is shown or a dedicated push proxy for each content provider, and embodied in a push container is shown.

[0125] With reference to Figure 14, messaging between a content provider 110 and a client application 150 is shown. Content provider 110 provides a registration message to push proxy 410. This message can include the service manifest which can be used to provide channel metadata to push proxy 410. This is done in step 1410.

[0126] Content provider 110 may also or alternatively provide channel metadata in a subsequent message, as illustrated by step 1412.

[0127] Push proxy 410 then adds a service to a list of available services (the service catalogue) in step 1414.

[0128] An optional step in the example of Figure 14 is for push proxy 410 to notify push client 510 of the new service available in step 1416 and this notification may be propagated to a client application 110 in step 1418.

[0129] As will be appreciated by those skilled in the art, steps 1416 and 1418 are optional, and other alternatives include client application 150 pulling the service catalogue periodically from push proxy 410 to view new services.

[0130] When a user or service provider for client application 150 decides that client application 150 should subscribe to a service, it sends a subscription message in step 1420. The subscription message is further passed to push proxy 410 in step 1422.

[0131] Once push proxy 410 receives the subscription message in step 1422, two options are available. A first option is to send a message 1424 to content provider 110 for a subscription and then receive a message envelope that includes metadata back in step 1426. The metadata could be device or device type specific.

[0132] Alternatively, push proxy 410 may receive the subscription message in step 1422 and immediately, based on information already provided by content provider 110 and stored on push proxy 410 reply in step 1430 to push client 510. This reply is propagated to the client application 150 in step 1532. As will be appreciated, the reply can include channel metadata specific for content provider 110.

[0133] The difference in models can be dependent on who is customizing the data for the application. As will be appreciated, content provider 110 provides the best customization of content compared with other processing elements. However, service provider 120, through push proxy 410, can also provide for customization of content.

[0134] Further, as will be appreciated, the structure of the content could be dependent on the data that the application requires. For example, in a financial application, the application may want both stock quotes and currency rates. The following XML may be used:

```
<FIN>
        <quotes>
                <quote ticker = ABC>
                        18.54
                </quote>
                <quote ticker = XYZ>
                        123.45
                </quote>
        </quotes>
        <rates>
                <rate id = "US-CAN">
                        1.15
                </rate>
                <rate id = "US-EURO">
                        0.85
                </rate>
        </rates>
    </FIN>
```

[0135] If the user only wanted quotes and no currency exchange, the structure could change to:

```
<FIN>
        <quote ticker = ABC>
                18.54
        </quote>
        <quote ticker = XYZ>
                123.45
        </quote>
    </FIN>
```

[0136] The metadata can provide information to the application on the structure that of the data being passed.

[0137] Thus, two models exist. Static metadata can be provided to push proxy 410 and to push client 510 either during registration or afterwards. Alternatively, the metadata for push proxy 410 and push client 510 can be pre-provisioned, i.e. information is stored at a push client or a push proxy until an application registers with a client.

[0138] Reference is now made to Figure 15. Figure 15 shows logical steps that occur upon registration of an application with a push client 510.

[0139] Once an application registers with push client 510, a first step 1510 is to match the registered application with the content type required by the application. This is known from the application manifest 918 as illustrated in Figure 9.

[0140] A second step 1520 is to set up the environment for the application. These include but are not limited to storage and delivery options for the application. For example, an application may limit transmissions to a predetermined amount of data. The push client 510 in a flow control event, or if the application or client is out of touch, may require the caching of the data for the application and optionally to notify the application that data is waiting.

[0141] A third step 1530, is to notify push proxy 410 of the application settings. This includes for example available storage for the application or push client 510. As will be appreciated, push proxy 410 should not push more data than push client 510 can store. Thus, the application settings could include an upper limit of the data that is passed. Referring to Figures 4 and 5, this could invoke content fragmentation block 464 to fragment the content if it is greater than the application can process. Also, if the data is non-linear, content dependencies block 462 may be required to create metadata for content dependencies block 564 of Figure 5 in order to allow content dependencies block 564 to reconstitute the data.

[0142] Referring again to Figure 15, step 1530 can also indicate preference on data delivery. For example, the application may prefer certain types of data over others and these types of data may be given priority. Thus step 1530 can be used to establish a delivery schedule where data of type "A" is delivered immediately while data of type "B" can be delivered at a deferred time.

[0143] Reference is now made to Figure 16. When a content provider 110 registers with a push proxy 410, various steps are performed. A first step 1610 includes analyzing required client settings for content storage and delivery. This can be used, for example, for service advertisement in order to identify push clients 510 on devices capable of consuming content from content provider 110.

[0144] A second step 1620 allows push proxy 410 to set up the environment, including proxy storage, delivery options, transformation options, among others.

[0145] In step 1630, push proxy 410 can check whether the application is already registered to obtain content from a content provider 110. If this is the case, the application is ready to receive content and a notification from push proxy 410 to content provider 110 that the delivery channel is established and the application is ready for content can be sent.

[0146] Step 1630 can occur, for example, if an application is pre-installed on a device prior to content provider 110 coming on-line. Thus, the application is waiting for content provider 110 to become available or the application is of generic type (e.g. a browser or RSS Viewer) and is capable of consuming information from multiple content providers. In an alternative setting, if content provider 110 is already available before the application is installed, the notification step 1530 in Figure 15 can be used to initiate the content starting to flow from content provider 110 to a client application 150.

[0147] As will be appreciated with reference to Figure 16, client settings can include certain information such as the available storage size used for content partitioning, the queue size used for flow control, delivery scheduling including a push interval, whether the client is retrieving information from the proxy, creating a pseudo-push mode, customization options such as the screen size of a mobile device, among others.

[0148] As will be further appreciated, service catalogues may differ for different clients. For example, certain clients may be able to utilize more data, have a different screen size or other conditions which make the client more suitable for a content provider 110 than a device that cannot handle this amount of information, has a smaller screen size, etc. Thus, push proxy 410 can create a service catalogue for specific client applications based on knowledge of those client applications, and only those devices with that client application 150 installed can receive information concerning the content provider.

[0149] As will be further appreciated, in some cases the application may be installed based on a service provider and content provider without the user intervention. For example, if content provider 110 registers with push proxy 410, a user of a mobile device may have a contract obligation to accept a certain application. Thus push proxy 410 could notify push client 510 that it is ready to install an application and push the application to push client 510. This could, for example, include a user that has agreed to receive a certain number of ads each month in order to get a preferred rate on their mobile plan. The content provider 110 could be an ad provider and push proxy 410 may therefore push an advertisement displaying application to push client 510, which might be serviced by an application installer registered with push client 410, thereby having the content provider 110 and the service provider 120 entirely driving the process.

[0150] The above therefore provides for a plug-in registration model in a push framework where each application or content provider registers and provides an application manifest or service manifest respectively. The application manifest or service manifest is used to establish channel metadata at the push proxy 410 and push client 510 either during registration or subsequently. Thereafter, when an application 150 registers and a content provider 110 registers, content can start flowing between the application 150 and the content provider 110.

[0151] With reference to Figures 4 and 5, the channel metadata is stored in a channel metadata repository 470 and 570. It is, however, also advantageous to store dynamic metadata on the various processing elements within architecture 100 if the dynamic metadata is repeated. As will be appreciated, this will save processing on the push proxy 410 since

current metadata extractor 450 does not need to extract the same metadata over and over. Further, processing by various modules such as content expiry and replacement module 466 or 566 do not need to be updated for each piece of content that is passed. Since push proxy 410 could be working with a large number of push clients 510, this processing saving for each content message could be significant. Further, bandwidth could be saved by not having to pass the metadata over a fixed line between content provider 110 and push proxy 410 or over the air between push proxy 410 and push client 510.

[0152] Reference is now made to Figure 17. Figure 17 illustrates an example of run time flow where your last metadata version is stored by the processing element.

[0153] As seen in Figure 17, content provider 110 provides a content envelope which includes content [C_1+M (p,c, a)$_1$]. This means that a first content payload is being sent along with metadata that includes proxy metadata, client metadata and application metadata. This is sent in step 1710.

[0154] At step 1712, push proxy 410 uses the proxy metadata as illustrated by the phrase "use M(p)$_1$". Further, in step 1714 the content plus the metadata that includes the client metadata and the application metadata is passed to push client 510.

[0155] In step 1716, push client 510 uses the client metadata and further in step 1718, passes the content payload to client application 150. Client application 150 uses, in step 1720 the application metadata and further consumes the content payload.

[0156] As seen in step 1722, a second content payload, designated by C_2, has the same metadata as the first content payload. Because each processing element, namely, push proxy 410, push client 510 and client application 150, cached the metadata for content provider 110, the metadata does not need to be passed again but instead already resides on the processing element.

[0157] Thereafter, in step 1724 the push proxy 410 uses metadata that was previously cached for the push proxy 410. Similarly, in steps 1726 and 1728 the push client 510 uses the client metadata and the client application 150 uses the application metadata respectively. Content is passed, without metadata, in steps 1725 and 1727.

[0158] As illustrated in step 1740, content may have new metadata for the push client 510 and client application 150, but may keep the old metadata for the push proxy 410. In this case, the metadata that is passed in step 1740 includes only client metadata and application metadata. In step 1742, the push proxy 410 uses the cached proxy metadata and passes the content payload along with the new client metadata and application metadata in step 1744.

[0159] In step 1746, the push client 510 uses the new client metadata that was passed to it and further passes the content payload and application metadata in step 1748.

[0160] In step 1750, the client application uses the new application metadata and further consumes the content payload.

[0161] As will be appreciated by one skilled in the art, various configurations could exist concerning which metadata has changed and which metadata stays the same, and only the metadata that has changed is passed to the processing element that requires it. As will be appreciated by those skilled in the art, the processing element, if it does not receive new metadata, goes back to the cached metadata that it has stored and uses this on the content payload.

[0162] In a further alternative embodiment, incremental changes can also be made to metadata. For example, in step 1760 a new content payload along with a delta metadata version can be passed to service proxy 410. The delta of the proxy metadata can include a difference between the proxy metadata previously passed and the current metadata that the content should be processed with. The push proxy 410 composes the metadata by adding the previous metadata with the delta and then using this to process the content payload in step 1762. Thereafter, since there has been no change, in step 1764 the content payload is sent by itself and in step 1766 the push client 510 uses the previously cached client metadata.

[0163] Push client then passes the content payload in step 1768 to client application 150, which uses the previously cached location metadata on the content payload in step 1770 and then it consumes the content payload.

[0164] An example of where incremental data may be used is a situation in which a content provider tells the proxy that of the existent fields within the content payload, 30 should be extracted to send to client application 150. In a subsequent transaction, two additional fields that are important for that piece of content payload may be deemed necessary to be passed to the client application 150 by content provider 110. The content provider could therefore, using an incremental change, tell push proxy to extract the two additional fields and add them to the 30 fields that were previously extracted. By only having to pass the delta, i.e. the two additional fields, the processing time for extracting the metadata at push proxy 410 is reduced, thereby optimizing the process.

[0165] As will be further appreciated, metadata can come in various forms. It could be compiled such as native code or_interpreted code such as Java or C#. The metadata can also be a data/properties file that indicates to use certain properties. In another alternative embodiment, it can be binary content, for example a transformation such as a XSLT transformation on an XML document.

[0166] The above can be used for various applications to provide intelligence for content being transferred to a specific client application. It can also provide for rich content providers that can provide content for various applications merely based on the metadata that they provide with their data. This can be illustrated by way of example in Figure 18.

[0167] A content provider 110 could, for example, be a on-line bookseller. An application can register with the on-line bookseller to indicate to the on-line bookseller that it wants to be informed of new releases of a specific genre. This could occur on a daily or weekly or monthly basis.

[0168] Content provider 110, for example, on a weekly basis will send a content envelope 1810 having a book list 1812, to push proxy 410. It can also send a transform metadata 1814, which can be, for example, a URL link for transforming the specific content based on the application receiving it.

[0169] In one embodiment, the book list 1812 could include numerous books, descriptions of each book including the author and a synopsis of the book. The file may, for example, be 100 KB in size.

[0170] Push proxy 410 can receive this large file and may realize, based on the client application being serviced, that a transformation to the large content file needs to be done in order to better accommodate the client which may only be able to receive, for example, 10 kilobytes of information. The transformation that is passed as a proxy metadata can therefore be applied to the book list to reduce the book list to a 10 KB modified document 1820. This can, for example, be done by removing the synopsis, ranking the books and only including the top 50 or other transformations as would be evident to those skilled in the art.

[0171] Once the transformation is complete, the modified document 1820 is then sent to the push client 510.

[0172] Further, the deferred retrieval message store 452, as seen in Figure 4, can be used to store the extra content that was stripped out in the transformation process.

[0173] The advantage of the above is that the bookseller can have one site and send one list to all of its clients. Since various clients will not be mobile wireless clients, the 100 KB file may be appropriate for these clients. By also providing the transformation metadata, the bookseller can have one list that it sends to everyone. As will be appreciated by those skilled in the art, most current web technologies require a separate website for a mobile client, and this is overcome by the above solution.

[0174] The above also lends itself to a syndication model and reference is now made to Figure 19.

[0175] As will be appreciated by those skilled in the art, a mobile device may not wish to receive large amounts of data when network conditions are not optimal for the receiving of large amounts of data. Further, network operators may wish to avoid sending large amounts of data during peak periods of bandwidth usage in order to spread network traffic more evenly over time. This can be accomplished using a push/pull model as illustrated in Figure 19.

[0176] As described with reference to Figure 4 above, content may be provided that includes more information than the user may currently needs. For example, if the user requests location information for restaurants within his area, a service provider may wish to add advertising such as other services available in the area. However, the service provider may not wish to push this additional content immediately to the user, but instead provide a primer such as a headline or a table of contents showing the additional content.

[0177] In other situations, the content may be too large to send to the user, and the user may receive only the first part of the content and the remainder of the content is stored in a deferred retrieval message store 452.

[0178] Thereafter, the stored content can be passed to push client 510 either by push proxy 410 or when asked for my push client 510.

[0179] Push client 510 includes a network status monitor 1910 which can monitor the status of the network. Push client 510 may wish to only receive extra data in certain conditions. For example, on a hybrid mobile device that has a WiFi and a cellular option, it is cheaper to provide data on the WiFi connection, and thus network status monitor 1910 could wait until the push client 510 is connected to a WiFi network prior to getting the deferred content. Alternatively, network status monitor could check whether the client is roaming in a foreign network or connected to the home network in order to minimize roaming charges. Network status monitor may also check to see whether a dedicated data channel is established for the device. One skilled in the art will realize that network status monitor 1910 could also check for various other preconditions in the network before requesting deferred data to be passed to push client 510.

[0180] A wireless network 130 could also provide information to either or both of push client 510 and push proxy 410 concerning the costs of delivery of data. As will be appreciated by those skilled in the art, various peak periods occur for the delivery of content. In the case of traffic information, the peak periods may be at the beginning and end of the workday when people are coming to and going from work. For stock quotes the peak period may be during the time that the market is open. Other peak periods will exist. In order to average the data traffic, it may be desirable for the network to charge different rates based on the current data usage in the network. Thus during peak periods a higher rate may be charged than a non-peak period such as the middle of the night. Wireless network 130 therefore provides delivery cost notifications to a deferred retrieval manager 552 on a push client 510 and to push scheduler 454 on push proxy 410.

[0181] In one embodiment, data from content provider 110 and passed to push proxy 410 can be ranked based on its importance to the client. Certain information can be designated through metadata to be delivered immediately. Other information can be designated to be delivered when the network cost is less than a first value (for example 10¢ per megabyte) and other data may be designated to be delivered when the network costs drop below a second value (for example, 5¢ per megabyte). Thus push scheduler 454 considers the data that is stored in deferred retrieval message store 452 and instructs push agent 444 to pass deferred data to push agent 544 on push client 510.

[0182] Alternatively, deferred retrieval manager 552 could also monitor network conditions as sent from wireless network 130 and if the data rate is below a certain rate can ask content pull broker 554 to pull content from deferred retrieval message store 452.

[0183] Alternatively, deferred retrieval manager 552 could see that the network status is favorable for pulling larger amounts of data, such as if the mobile device has connected with a WiFi network, and ask content pull broker 554 to pull the data from deferred retrieval message store 452.

[0184] As will be further appreciated, a user can always request to have the content pulled. Thus user request 1940 could also be used to trigger content pull broker 554 to pull the data from deferred retrieval message store 452.

[0185] The rules stored in push scheduler 454 and deferred retrieval manager 552 could be static metadata based on a classification of content. The rules could also be based on dynamic metadata for the particular data that has been passed. In this case the content provider 110 has classified the data.

[0186] Reference is now made to Figure 20. As will be appreciated by those skilled in the art, data can be one of two forms, linear or non-linear. Linear data could, for example, be arrays or strings or content that flows in a linear fashion. Non-linear data, conversely, is data that does not linearly relate to each other and can include complex dependencies with content maps or links.

[0187] For linear content, fragmentation merely involves the breaking of the data into various components based on linear progression. The data is partitioned into segments and the segments are delivered to the push client 410. As indicated in Figure 20, fragmentation processor 2010 interacts with content 2012 and decides that the content can be parsed with linear progression. The fragmentation processor 2010 next partitions the data into segments 2014, 2016 and 2018 in the example of Figure 20, and, as illustrated in Figure 20, passes the first segment 2014 while deferring the passing of the second and third segments 2016 and 2018 respectively.

[0188] The cursor management module 2030 keeps track of which segment has been delivered and delivers the next segment in order.

[0189] Referring to Figure 21, non-linear content needs to be partitioned in a more intelligent way. Further, at the other end, in order to reconstitute the segments, metadata is required.

[0190] A fragmentation processor 2110 analyses the content based on a metadata based analysis. These could include keeping certain segments or data elements together if logically required. Fragmentation processor 2110 analyses content 2112 and partitions the content into segments based on logical rules. Each segment includes the content plus metadata including for example, dependencies, maps, and navigation rules for each segment.

[0191] Once partitioned, a first segment 2114 is sent to push client 510 and the passing of the remainder of the segments 2116 and 2118 is deferred as illustrated in Figure 21. Segment navigation block 2130 deals with which segment to send next. As will be appreciated by those skilled in the art, first segment 2114 includes a data portion and a metadata portion. The metadata portion of segment 2114 is a layer of metadata that is added by the fragmentation processor 2110 to indicate to content dependencies module 564 how to reconstitute the content. Data portion of first segment 2114 can include both content and metadata associated with the channel or with the content.

[0192] Segment navigation block 2130 is adapted to process how a user travels through the data. For example, if the data is in a tree format and the user goes down a first branch of the tree, segment navigation block 2130 may pass to push client 410 other branches in the tree that can be reached from the element that the user has navigated to.

[0193] For example, a tree could include an employee database that has employee names along with a structure for the corporation. Based on Figure 21, if the user navigates into a specific department of the organization, the segmentation navigation block 2130 might forward the group fragments for groups within that department. If the user then navigates into a specific group within the department, the segmentation navigation block 2130 might then pass information fragments about the employees within that group.

[0194] The above therefore requires that the data be partitioned into logical components. Identifiers are assigned to all types and content, and structural information is created passing the information with the primer.

[0195] The above therefore provides an architecture for dynamic content delivery that can be used with generic systems where applications and content can be added without changing the structure of the system. The content can be tailored to fit the application receiving it, and be fragmented according to the above.

[0196] As will be appreciated, the push client and client applications can reside on any mobile device. One exemplary mobile device is described below with reference to **Figure 22.** This is not meant to be limiting, but is provided for illustrative purposes.

[0197] **Figure 22** is a block diagram illustrating a mobile station apt to be used with preferred embodiments of the apparatus and method of the present application. Mobile station **2200** is preferably a two-way wireless communication device having at least voice and data communication capabilities. Mobile station **2200** preferably has the capability to communicate with other computer systems on the Internet. Depending on the exact functionality provided, the wireless device may be referred to as a data messaging device, a two-way pager, a wireless e-mail device, a cellular telephone with data messaging capabilities, a wireless Internet appliance, or a data communication device, as examples.

[0198] Where mobile station **2200** is enabled for two-way communication, it will incorporate a communication subsys-

tem **2211,** including both a receiver **2212** and a transmitter **2214,** as well as associated components such as one or more, preferably embedded or internal, antenna elements **2216** and **2218,** local oscillators (LOs) **2213,** and a processing module such as a digital signal processor (DSP) **2220.** As will be apparent to those skilled in the field of communications, the particular design of the communication subsystem **2211** will be dependent upon the communication network in which the device is intended to operate.

[0199] Network access requirements will also vary depending upon the type of network **2219.** In some CDMA networks network access is associated with a subscriber or user of mobile station **2200.** A CDMA mobile station may require a removable user identity module (RUIM) or a subscriber identity module (SIM) card in order to operate on a CDMA network. The SIM/RUIM interface **2244** is normally similar to a card-siot into which a SIM/RUIM card can be inserted and ejected like a diskette or PCMCIA card. The SIM/RUIM card can have approximately 64K of memory and hold many key configuration 2251, and other information 2253 such as identification, and subscriber related information.

[0200] When required network registration or activation procedures have been completed, mobile station 2200 may send and receive communication signals over the network 2219. As illustrated in Figure 22, network 2219 can consist of multiple base stations communicating with the mobile device. For example, in a hybrid CDMA 1x EVDO system, a CDMA base station and an EVDO base station communicate with the mobile station and the mobile station is connected to both simultaneously. The EVDO and CDMA 1x base stations use different paging slots to communicate with the mobile device.

[0201] Signals received by antenna 2216 through communication network 2219 are input to receiver 2212, which may perform such common receiver functions as signal amplification, frequency down conversion, filtering, channel selection and the like, and in the example system shown in Figure 22, analog to digital (A/D) conversion. A/D conversion of a received signal allows more complex communication functions such as demodulation and decoding to be performed in the DSP 2220. In a similar manner, signals to be transmitted are processed, including modulation and encoding for example, by DSP 2220 and input to transmitter 2214 for digital to analog conversion, frequency up conversion, filtering, amplification and transmission over the communication network 2219 via antenna 2218. DSP 2220 not only processes communication signals, but also provides for receiver and transmitter control. For example, the gains applied to communication signals in receiver 2212 and transmitter 2214 may be adaptively controlled through automatic gain control algorithms implemented in DSP 2220.

[0202] Mobile station 2200 preferably includes a microprocessor 2238 which controls the overall operation of the device. Communication functions, including at least data and voice communications, are performed through communication subsystem 2211. Microprocessor 2238 also interacts with further device subsystems such as the display 2222, flash memory 2224, random access memory (RAM) 2226, auxiliary input/output (I/O) subsystems 2228, serial port 2230, two or more keyboards or keypads 2232, speaker 2234, microphone 2236, other communication subsystem 2240 such as a short-range communications subsystem and any other device subsystems generally designated as 2242. Serial port 2230 could include a USB port or other port known to those in the art.

[0203] Some of the subsystems shown in Figure 22 perform communication-related functions, whereas other subsystems may provide "resident" or on-device functions. Notably, some subsystems, such as keyboard 2232 and display 2222, for example, may be used for both communication-related functions, such as entering a text message for transmission over a communication network, and device-resident functions such as a calculator or task list.

[0204] Operating system software used by the microprocessor 2238 is preferably stored in a persistent store such as flash memory 2224, which may instead be a read-only memory (ROM) or similar storage element (not shown). Those skilled in the art will appreciate that the operating system, specific device applications, or parts thereof, may be temporarily loaded into a volatile memory such as RAM 2226. Received communication signals may also be stored in RAM 2226.

[0205] As shown, flash memory 2224 can be segregated into different areas for both computer programs 2258 and program data storage 2250, 2252, 2254 and 2256. These different storage types indicate that each program can allocate a portion of flash memory 2224 for their own data storage requirements. Microprocessor 2238, in addition to its operating system functions, preferably enables execution of software applications on the mobile station. A predetermined set of applications that control basic operations, including at least data and voice communication applications for example, will normally be installed on mobile station 2200 during manufacturing. Other applications could be installed subsequently or dynamically.

[0206] A preferred software application may be a personal information manager (PIM) application having the ability to organize and manage data items relating to the user of the mobile station such as, but not limited to, e-mail, calendar events, voice mails, appointments, and task items. Naturally, one or more memory stores would be available on the mobile station to facilitate storage of PIM data items. Such PIM application would preferably have the ability to send and receive data items, via the wireless network 2219. In a preferred embodiment, the PIM data items are seamlessly integrated, synchronized and updated, via the wireless network 2219, with the mobile station user's corresponding data items stored or associated with a host computer system. Further applications may also be loaded onto the mobile station 2200 through the network 2219, an auxiliary I/O subsystem **2228,** serial port **2230,** short-range communications subsystem **2240** or any other suitable subsystem **2242,** and installed by a user in the RAM **2226** or preferably a non-volatile

store (not shown) for execution by the microprocessor **2238.** Such flexibility in application installation increases the functionality of the device and may provide enhanced on-device functions, communication-related functions, or both. For example, secure communication applications may enable electronic commerce functions and other such financial transactions to be performed using the mobile station **2200.**

[0207] In a data communication mode, a received signal such as a text message or web page download will be processed by the communication subsystem **2211** and input to the microprocessor **2238,** which preferably further processes the received signal for output to the display **2222,** or alternatively to an auxiliary I/O device **2228.** A push client **2260,** which could be equivalent to push clients **140** and **510,** could also process the input.

[0208] A user of mobile station **2200** may also compose data items such as email messages for example, using the keyboard **2232,** which is preferably a complete alphanumeric keyboard or telephone-type keypad, in conjunction with the display **2222** and possibly an auxiliary I/O device **2228.** Such composed items may then be , transmitted over a communication network through the communication subsystem **2211.**

[0209] For voice communications, overall operation of mobile station **2200** is similar, except that received signals would preferably be output to a speaker **2234** and signals for transmission would be generated by a microphone **2236.** Alternative voice or audio I/O subsystems, such as a voice message recording subsystem, may also be implemented on mobile station **2200.** Although voice or audio signal output is preferably accomplished primarily through the speaker **2234,** display **2222** may also be used to provide an indication of the identity of a calling party, the duration of a voice call, or other voice call related information for example.

[0210] Serial port **2230** in **Figure 22,** would normally be implemented in a personal digital assistant (PDA)-type mobile station for which synchronization with a user's desktop computer (not shown) may be desirable, but is an optional device component. Such a port **2230** would enable a user to set preferences through an external device or software application and would extend the capabilities of mobile station **2200** by providing for information or software downloads to mobile station **2200** other than through a wireless communication network. The alternate download path may for example be used to load an encryption key onto the device through a direct and thus reliable and trusted connection to thereby enable secure device communication. As will be appreciated by those skilled in the art, serial port 2230 can further be used to connect the mobile device to a computer to act as a modem.

[0211] Other communications subsystems 2240, such as a short-range communications subsystem, is a further optional component which may provide for communication between mobile station 2200 and different systems or devices, which need not necessarily be similar devices. For example, the subsystem 2240 may include an infrared device and associated circuits and components or a Bluetooth™ communication module to provide for communication with similarly enabled systems and devices.

[0212] The embodiments described herein are examples of structures, systems or methods having elements corresponding to elements of the techniques of this application. This written description may enable those skilled in the art to make and use embodiments having alternative elements that likewise correspond to the elements of the techniques of this application. The intended scope of the techniques of this application thus includes other structures, systems or methods that do not differ from the techniques of this application as described herein, and further includes other structures, systems or methods with insubstantial differences from the techniques of this application as described herein.

Claims

1. A push proxy (410) for use in a generic dynamic content delivery system comprising:

a content provider registration service provider interface (420), said service provider interface (420) adapted to register content providers (412) (412) with said push proxy (410) and to further receive channel metadata for the content providers (412);
a channel metadata repository (470), said channel metadata repository (470) adapted to store said channel metadata received from the content providers (412);
a content metadata extractor and cache module (450), said content metadata extractor and cache module (450) being adapted to extract metadata for said push proxy (410) from a content and metadata envelope received from the content providers (412), said content metadata extractor and cache module (450) further adapted to cache said metadata on said push proxy (410);
a content fragmentation module (464), said content fragmentation module (464) adapted to break a content and metadata envelope into segments;
a deferred retrieval message store module (452), said deferred retrieval message store module (452) adapted to store a content envelope or one or more segments from said content fragmentation module (464);
a content expiry and replacement nodule (466), said content expiry and replacement module (466) adapted to expire content stored in the deferred retrieval message store module (452) or to replace content stored in the

deferred retrieval message store module (452);
a content dependencies module (462), said content dependencies module (462) adapted to provide selection of push clients (510) to advertise a service to;
a push scheduler (454), said push scheduler (454) adapted to schedule the pushing of a content envelope stored in the deferred retrieval message store module (452); and
a subscription and rules module (460), said subscription and rules module (460) adapted to maintain a subscription between an application and the content provider (412) and maintain a list of rules for the subscription.

2. The push proxy (410) of claim 1, further comprising push agents (444) to push content and metadata envelopes to a push client (510).

3. The push proxy (410) of claim 1 or claim 2, further comprising a flow control management module (442), the flow control management module (442) adapted to receive flow control messages from the push client (510) and start or stop pushing content and metadata envelopes.

4. The push proxy (410) of any one of claims 1 to 3, further comprising message brokers and delivery queues (440) to store and manage content and metadata envelopes.

5. A push client (510) for use in a dynamic content delivery architecture, the push client comprising:

an application registration application provider interface (514) adapted to register applications (512) to said push client and further adapted to receive an application manifest (918) for said applications, said application manifest (918) containing channel metadata;
a channel metadata repository (570) adapted to store channel metadata received from said application (512);
communication means, such communication means adapted to receive a content and metadata envelope from a push proxy (410);
content metadata extractor and cache module (550), said content metadata extractor and cache module (550) being adapted to extract metadata for said push client from said content and metadata envelope and further being adapted to cache said metadata on said push client;
a deferred retrieval manager (552) adapted to schedule retrieval of content from the push proxy (410) not yet received by the push client (510);
a content dependencies module (564) adapted to reconstitute content previously broken into segments;
a content expiry and replacement module (566), said content expiry and replacement module (566) adapted to expire content stored at said push client or to replace content stored at the push client;
an update notification block (562), said update notification block adapted to work with said applications (512) to notify the applications that new content is waiting for them;
a subscription management block (560), said subscription management block (560) adapted to manage subscriptions between the application and a content provider;
a pull broker (554) adapted to pull content when required by the push client, said pull broker being driven by said deferred retrieval manager (552),

wherein said push client is adapted to register generic applications and receive generic content type from the content provider.

6. The push client (510) of claim 5, further comprising push agents (544) to receive content and metadata envelopes from the push proxy (410).

7. The push client (510) of claim 5 or claims 6, further comprising a flow control management module (542), the flow control management module (542) adapted to send flow control messages to the push proxy (410) to start or stop pushing content and metadata envelopes.

8. The push client (510) of any one of claims 5 to 7, further comprising message brokers and delivery queues (540) to store and manage content and metadata envelopes.

9. The push client (510) of any one of claims 5 to 8, wherein said push client further comprises a background update processing module (575) adapted to perform background updates for applications not connected with said push client.

10. The push client (510) of any one of claims 5 to 9, wherein the update notification block (562) is adapted to store

content for said applications in predetermined locations.

11. The push client (510) of claim 10, wherein the update notification block (562) is adapted to send a message to the client application that data has been stored in the predetermined locations.

12. The push client (510) of any one of claims 5 to 11, wherein the update notification block (562) is adapted to send the content and metadata envelope to the applications.

13. A method of pushing generic dynamic content via a push proxy (410) of a generic dynamic content delivery system, the method comprising:

obtaining a service manifest (962) at the push proxy (410), the services manifest (962) corresponding to a dynamic content push service provided by a service provider (120);
registering a content provider (412) with the generic dynamic content delivery system by registering the content provider with the push proxy (410) having a content provider registration interface (420) to receive channel metadata from the content provider;
storing said channel metadata in a channel metadata repository (470) associated with the push proxy (410);
receiving a content and metadata envelope at the push proxy (410) from the content provider; and
processing the content and metadata envelope in accordance with the channel metadata.

14. A method as claimed in claim 13 further comprising:

extracting metadata for said push proxy (410) from said content and metadata envelope;.and
processing said content and metadata envelope in accordance with said extracted metadata.

15. A method as claimed in claim 14 further comprising processing the content of said content and metadata envelope in accordance with said extracted metadata.

16. A method as claimed in any one of claims 13 to 15 further comprising fragmenting a content and metadata envelope into segments.

17. A method as claimed in claim 16 further comprising storing one of content, a content segment, a content and metadata envelope, and a content and metadata envelope segment in a deferred retrieval message store (452).

18. A method as claimed in claim 17 further comprising any of: expiring time sensitive content stored in the deferred retrieval message store (452); replacing content stored in the deferred retrieval message store (452) with updated content; or scheduling the pushing of the contents said deferred retrieval message store (452).

19. A method as claimed in any one of claims 13 to 15 further comprising determining a selection of push clients (510) from content dependencies.

20. A method as claimed in claims 19 further comprising any of: providing the selection of push clients (510) to advertise a service thereto; or maintaining a subscription between an application and the content provider (412).

21. A method as claimed in claim 20 further comprising maintaining a list of rules for the subscription.

22. A method as claimed in any one of claims 13 to 15, 16, 17 or 18 further comprising pushing said content and metadata envelope to a push client (510).

23. A method as claimed in claims 22 further comprising:

receiving flow control messages from the push client (510); and
selectively pushing said content and metadata envelope to the push client as directed via the flow control messages.

24. A method as claimed in any one of claims 13, 16 or 17 further comprising storing content and metadata in a plurality of delivery queues. (440).

25. A method as claimed in claim 24 further comprising managing content and metadata stored in the plurality of delivery queues by employing at least one message broker (440).

26. A method of pushing generic dynamic content via a push client (510) of a generic dynamic content delivery system, the method comprising:

obtaining an application manifest (962) at a push client, the application manifest corresponding to an application (512) processing dynamic content pushed thereto;
registering the application with the generic dynamic content delivery system by registering the application with the push client having an application registration interface (514), said application manifest containing channel metadata;
storing said channel metadata in a channel metadata repository (570) associated with the push client;
receiving a content and metadata envelope at the push client via a push proxy (410); and
processing the content and metadata envelope in accordance with the channel metadata.

27. A method as claimed in claim 26 further comprising:

extracting metadata for said push client from said content and metadata envelope; and
processing said content and metadata envelope in accordance with said extracted metadata.

28. A method as claimed in claim 27 further comprising processing the content of said content and metadata envelope in accordance with said extracted metadata.

29. A method as claimed in any one of claims 26 to 28 further comprising scheduling retrieval of content yet to be received by the push client (510) via said push proxy (410).

30. A method as claimed in claim 29 further comprising pulling content as directed by a deferred retrieval manager (552) performing the scheduling of said retrieval of content.

31. A method as claimed in claim 30 further comprising storing one of content, a content segment, a content and metadata envelope, and a content and metadata envelope segment at the push client (510).

32. A method as claimed in claim 31 further comprising any of: expiring time sensitive content stored at said push client (510); replacing content stored at said push client with updated content; or reconstituting content previously broken into segments based on content dependencies.

33. A method as claimed in claim 26 further comprising selectively sending flow control messages to the push proxy (410) to push said content and metadata envelope to the push client (510).

34. A method as claimed in any one of claims 26, 31 or 32 further comprising storing content and metadata in a plurality of delivery queues (540).

35. A method as claimed in claim 34 further comprising managing content and metadata stored in the plurality of delivery queues by employing at least one message broker (540).

Patentansprüche

1. Push-Proxy (410) zur Verwendung in einem System zur Zustellung von generischen dynamischen Inhalten, umfassend:

eine Diensteanbieter-Schnittstelle (420) für die Inhalteanbieter-Registrierung, wobei die Diensteanbieter-Schnittstelle (420) dafür ausgelegt ist, Inhalteanbieter (412)(412) bei dem Push-Proxy (410) zu registrieren und ferner Kanal-Metadaten für die Inhalteanbieter (412) zu empfangen;
ein Kanal-Metadaten-Repository (470), wobei das Kanal-Metadaten-Repository (470) dafür ausgelegt ist, die von den Inhalteanbietern (412) empfangenen Kanal-Metadaten zu speichern;
ein Modul zum Extrahieren und Zwischenspeichern von Inhalte-Metadaten (450), wobei das Modul zum Extrahieren und Zwischenspeichern von Inhalte-Metadaten (450) dafür ausgelegt ist, Metadaten für den Push-Proxy

(410) aus einer Inhalte- und Metadaten-Envelope zu extrahieren, die von den Inhalteanbietern (412) empfangen wurde, wobei das Modul zum Extrahieren und Zwischenspeichern von Inhalte-Metadaten (450) ferner dafür ausgelegt ist, die Metadaten auf dem Push-Proxy (410) zwischenzuspeichern;
ein Modul zum Fragmentieren von Inhalten (464), wobei das Modul zum Fragmentieren von Inhalten (464) dafür ausgelegt ist, eine Inhalte- und Metadaten-Envelope in Segmente aufzugliedern;
ein Modul zum Speichern von Nachrichten für verzögerten Abruf (452), wobei das Modul zum Speichern von Nachrichten für verzögerten Abruf (452) dafür ausgelegt ist, eine Inhalte-Envelope oder ein oder mehrere Segment(e) von dem Modul zum Fragmentieren von Inhalten (464) zu speichern;
ein Modul für Verfall und Austausch von Inhalten (466), wobei das Modul für Verfall und Austausch von Inhalten (466) dafür ausgelegt ist, in dem Modul zum Speichern von Nachrichten für verzögerten Abruf (452) gespeicherte Inhalte verfallen zu lassen oder in dem Modul zum Speichern von Nachrichten für verzögerten Abruf (452) gespeicherte Inhalte auszutauschen;
ein Modul für Inhalte-Abhängigkeiten (462), wobei das Modul für Inhalte-Abhängigkeiten (462) dafür ausgelegt ist, eine Auswahl von Push-Clients (510) bereitzustellen, bei denen für einen Dienst geworben werden soll;
einen Push-Planer (454), wobei der Push-Planer (454) dafür ausgelegt ist, die Auslieferung einer in dem Modul zum Speichern von Nachrichten für verzögerten Abruf (452) gespeicherten Inhalte-Envelope zu planen; und
ein Subskriptions- und Regelmodul (460), wobei das Subskriptions- und Regelmodul (460) dafür ausgelegt ist, eine Subskription zwischen einer Anwendung und dem Inhalteanbieter (412) sowie eine Liste der Regeln für die Subskription zu verwalten.

2. Push-Proxy (410) nach Anspruch 1, ferner umfassend Push-Agenten (444), um Inhalte- und Metadaten-Envelopes an einen Push-Client (510) auszuliefern.

3. Push-Proxy (410) nach Anspruch 1 oder Anspruch 2, ferner umfassend ein Flusssteuerungs-Management-Modul (442), wobei das Flusssteuerungs-Management-Modul (442) dafür ausgelegt ist, Flusssteuerungsnachrichten von dem Push-Client (510) zu empfangen und die Auslieferung von Inhalte- und Metadaten-Envelopes zu starten oder zu beenden.

4. Push-Proxy (410) nach Anspruch 1 bis 3, ferner umfassend Message-Broker und Zustell-Warteschlangen (440) zum Speichern und Verwalten von Inhalte- und Metadaten-Envelopes.

5. Push-Client (510) zur Verwendung in einer Architektur zur Zustellung von dynamischen Inhalten, wobei der Push-Client umfasst:

eine Anwendungsanbieter-Schnittstelle zur Anwendungsregistrierung (514), die dafür ausgelegt ist, Anwendungen (512) bei dem Push-Client zu registrieren, und ferner dafür ausgelegt ist, ein Anwendungsmanifest (918) für die Anwendungen zu empfangen, wobei das Anwendungsmanifest (918) Kanal-Metadaten enthält;
ein Kanal-Metadaten-Repository (570), das dafür ausgelegt ist, von der Anwendung (512) empfangene Kanal-Metadaten zu speichern,
Kommunikationsmittel, wobei derartige Kommunikationsmittel dafür ausgelegt sind, eine Inhalte- und Metadaten-Envelope von einem Push-Proxy (410) zu empfangen;
ein Modul zum Extrahieren und Zwischenspeichern von Inhalte-Metadaten (550), wobei das Modul zum Extrahieren und Zwischenspeichern von Inhalte-Metadaten (550) dafür ausgelegt ist, Metadaten für den Push-Client aus der Inhalt- und Metadaten-Envelope zu extrahieren, und ferner dafür ausgelegt ist, die Metadaten auf dem Push-Client zwischenzuspeichern;
einen Manager für verzögerten Abruf (552), der dafür ausgelegt ist, den Abruf von Inhalten, die der Push-Client (510) bisher nicht empfangen hat, von einem Push-Proxy (410) zu planen;
ein Modul für Inhalte-Abhängigkeiten (564), das dafür ausgelegt ist, zuvor in Segmente untergliederte Inhalte wieder zusammenzusetzen;
ein Modul für Verfall und Austausch von Inhalten (566), wobei das Modul für Verfall und Austausch von Inhalten (566) dafür ausgelegt ist, auf dem Push-Client gespeicherte Inhalte verfallen zu lassen bzw. auf dem Push-Client gespeicherte Inhalte auszutauschen;
einen Update-Benachrichtigungsblock (562), wobei der Update-Benachrichtigungsblock (562) dafür ausgelegt ist, mit den Anwendungen (512) zusammenzuarbeiten, um die Anwendungen zu benachrichtigen, dass neue Inhalte für sie bereitstehen;
einen Subskriptions-Management-Block (560), wobei der Subskriptions-Management-Block (560) dafür ausgelegt ist, Subskriptionen zwischen der Anwendung und einem Inhalteanbieter zu verwalten;
einen Pull-Broker (554), der dafür ausgelegt ist, Inhalte abzurufen, wenn der Push-Client dies fordert, wobei

der Pull-Broker von dem Manager für verzögerten Abruf (552) gesteuert wird,

wobei der Push-Client dafür ausgelegt ist, generische Anwendungen zu registrieren und Inhalte generischer Art von dem Inhalteanbieter zu empfangen.

6. Push-Client (510) nach Anspruch 5, ferner umfassend Push-Agenten (544), um Inhalte- und Metadaten-Envelopes von dem Push-Proxy (410) zu empfangen.

7. Push-Client (510) nach Anspruch 5 oder 6, ferner umfassend ein Flusssteuerungs-Management-Modul (542), wobei das Flusssteuerungs-Management-Modul (542) dafür ausgelegt ist, Flusssteuerungsnachrichten an den Push-Proxy (410) zu senden, um die Auslieferung von Inhalte- und Metadaten-Envelopes zu starten bzw. zu beenden.

8. Push-Client (510) nach einem der Ansprüche 5 bis 7, ferner umfassend Message-Broker- und Zustell-Warteschlangen (540) zum Speichern und Verwalten von Inhalte- und Metadaten-Envelopes.

9. Push-Client (510) nach einem der Ansprüche 5 bis 8, wobei der Push-Client ferner ein Modul für die Update-Verarbeitung im Hintergrund (575) umfasst, das dafür ausgelegt ist, im Hintergrund Updates für Anwendungen auszuführen, die nicht mit dem Push-Client verbunden sind.

10. Push-Client (510) nach einem der Ansprüche 5 bis 9, wobei der Update-Benachrichtigungsblock (562) dafür ausgelegt ist, Inhalte für die Anwendungen an vorab definierten Speicherorten abzulegen.

11. Push-Client (510) nach Anspruch 10, wobei der Update-Benachrichtigungsblock (562) dafür ausgelegt ist, eine Nachricht an die Client-Anwendung zu senden, dass Daten an den vorab definierten Speicherorten abgelegt wurden.

12. Push-Client (510) nach einem der Ansprüche 5 bis 11, wobei der Update-Benachrichtigungsblock (562) dafür ausgelegt ist, die Inhalte- und Metadaten-Envelope an die Anwendungen zu senden.

13. Verfahren für die Auslieferung generischer dynamischer Inhalte über einen Push-Proxy (410) eines Systems zur Zustellung von generischen dynamischen Inhalten, umfassend:

Empfangen eines Dienstmanifests (962) am Push-Proxy (410), wobei das Dienstmanifest (962) einem Push-Dienst mit dynamischen Inhalten entspricht, der von einem Diensteanbieter (120) bereitgestellt wird;
Registrieren eines Inhalteanbieters (412) bei dem System zur Zustellung von generischen dynamischen Inhalten, indem der Inhalteanbieter bei dem Push-Proxy (410) registriert wird, welcher eine Schnittstelle für die Inhalteanbieter-Registrierung (420) besitzt, um Kanal-Metadaten von dem Inhalteanbieter zu empfangen;
Speichern der Kanal-Metadaten in einem Kanal-Metadaten-Repository (470), das dem Push-Proxy (410) zugeordnet ist;
Empfangen einer Inhalte- und Metadaten-Envelope von dem Inhalteanbieter am Push-Proxy (410); und
Verarbeiten der Inhalte- und Metadaten-Envelope entsprechend den Kanal-Metadaten.

14. Verfahren nach Anspruch 13, ferner umfassend:

Extrahieren von Metadaten für den Push-Proxy (410) aus der Inhalte- und Metadaten-Envelope; und
Verarbeiten der Inhalte- und Metadaten-Envelope entsprechend den extrahierten Metadaten.

15. Verfahren nach Anspruch 14, ferner umfassend das Verarbeiten der Inhalte aus der Inhalte- und Metadaten-Envelope entsprechend den extrahierten Metadaten.

16. Verfahren nach einem der Ansprüche 13 bis 15, ferner umfassend das Fragmentieren einer Inhalte- und Metadaten-Envelope in Segmente.

17. Verfahren nach Anspruch 16, ferner umfassend das Speichern entweder der Inhalte oder eines Inhaltssegments oder einer Inhalte- und Metadaten-Envelope oder eines Segments einer Inhalte- und Metadaten-Envelope in einem Modul zum Speichern von Nachrichten für verzögerten Abruf (452).

18. Verfahren nach Anspruch 17, ferner umfassend ein beliebiges von: Verfallenlassen zeitkritischer Inhalte, die in dem Modul zum Speichern von Nachrichten für verzögerten Abruf (452) gespeichert sind; Austauschen von Inhalten,

die in dem Modul zum Speichern von Nachrichten für verzögerten Abruf (452) gespeichert sind, durch aktualisierte Inhalte; oder Planen der Auslieferung der Inhalte in dem Modul zum Speichern von Nachrichten für verzögerten Abruf (452).

19. Verfahren nach einem der Ansprüche 13 bis 15, ferner umfassend das Bestimmen einer Auswahl von Push-Clients (510) anhand von Abhängigkeiten der Inhalte.

20. Verfahren nach Anspruch 19, ferner umfassend ein beliebiges von: Bereitstellen der Auswahl von Push-Clients (510), um bei ihnen für einen Dienst zu werben; oder Verwalten einer Subskription zwischen einer Anwendung und dem Inhalteanbieter (412).

21. Verfahren nach Anspruch 20, ferner umfassend das Verwalten einer Liste von Regeln für die Subskription.

22. Verfahren nach einem der Ansprüche 13 bis 15, 16, 17 oder 18, ferner umfassend das Ausliefern der Inhalte- und Metadaten-Envelope an einen Push-Client (510).

23. Verfahren nach Anspruch 22, ferner umfassend:

Empfangen von Flusssteuerungs-Nachrichten von dem Push-Client (510); und
selektives Ausliefern der Inhalte- und Metadaten-Envelope an den Push-Client wie durch die Flusssteuerungs-Nachrichten vorgegeben.

24. Verfahren nach einem der Ansprüche 13, 16 oder 17, ferner umfassend das Speichern der Inhalte und Metadaten in einer Mehrzahl von Zustell-Warteschlangen (440).

25. Verfahren nach Anspruch 24, ferner umfassend das Verwalten der Inhalte und Metadaten, die in der Mehrzahl von Zustell-Warteschlangen gespeichert sind, durch Einsatz mindestens eines Message-Brokers (440).

26. Verfahren für die Auslieferung generischer dynamischer Inhalte über einen Push-Client (510) eines Systems zur Zustellung von generischen dynamischen Inhalten, umfassend:

Empfangen eines Anwendungsmanifests (962) an einem Push-Client, wobei das Anwendungsmanifest einer Anwendung (512) entspricht, die an sie ausgelieferte dynamische Inhalte verarbeitet;
Registrieren der Anwendung bei dem System zur Zustellung von generischen dynamischen Inhalten, indem die Anwendung bei dem Push-Client registriert wird, welcher eine Schnittstelle für die Anwendungsregistrierung (514) besitzt, wobei das Anwendungsmanifest Kanal-Metadaten enthält;
Speichern der Kanal-Metadaten in einem Kanal-Metadaten-Repository (570), das dem Push-Client zugeordnet ist;
Empfangen einer Inhalte- und Metadaten-Envelope am Push-Client über einen Push-Proxy (410); und
Verarbeiten der Inhalte- und Metadaten-Envelope entsprechend den Kanal-Metadaten.

27. Verfahren nach Anspruch 26, ferner umfassend:

Extrahieren von Metadaten für den Push-Client aus der Inhalte- und Metadaten-Envelope; und
Verarbeiten der Inhalte- und Metadaten-Envelope entsprechend den extrahierten Metadaten.

28. Verfahren nach Anspruch 27, ferner umfassend das Verarbeiten der Inhalte aus der Inhalte- und Metadaten-Envelope entsprechend den extrahierten Metadaten.

29. Verfahren nach einem der Ansprüche 26 bis 28, ferner umfassend das Planen des Abrufens von Inhalten, die von dem Push-Client (510) noch empfangen werden müssen, über den Push-Proxy (410).

30. Verfahren nach Anspruch 29, ferner umfassend das Abrufen von Inhalten gemäß Vorgabe durch einen Manager für verzögerten Abruf (552), der das Abrufen von Inhalten plant.

31. Verfahren nach Anspruch 30, ferner umfassend das Speichern entweder der Inhalte oder eines Inhaltssegments oder einer Inhalte- und Metadaten-Envelope oder eines Segments einer Inhalte- und Metadaten-Envelope am Push-Client (510).

32. Verfahren nach Anspruch 31, ferner umfassend ein beliebiges von: Verfallenlassen zeitkritischer Inhalte, die an dem Push-Client (510) gespeichert sind; Austauschen von Inhalten, die an dem Push-Client gespeichert sind, durch aktualisierte Inhalte; oder Zusammensetzen von zuvor in Segmente untergliederten Inhalten auf Basis von Abhängigkeiten der Inhalte.

33. Verfahren nach Anspruch 26, ferner umfassend das selektive Senden von Flusssteuerungs-Nachrichten an den Push-Proxy (410), um die Inhalte- und Metadaten-Envelope an den Push-Client (510) auszuliefern.

34. Verfahren nach einem der Ansprüche 26, 31 oder 32, ferner umfassend das Speichern der Inhalte und Metadaten in einer Mehrzahl von Zustell-Warteschlangen (540).

35. Verfahren nach Anspruch 34, ferner umfassend das Verwalten der Inhalte und Metadaten, die in der Mehrzahl von Zustell-Warteschlangen gespeichert sind, durch Einsatz mindestens eines Message-Brokers (540).

Revendications

1. Un proxy push (410) destiné à une utilisation dans un système de remise de contenus dynamiques génériques comprenant :

une interface de fournisseur de services d'enregistrement de fournisseur de contenus (420), ladite interface de fournisseur de services (420) étant adaptée de façon à enregistrer des fournisseurs de contenus (412) auprès dudit proxy push (410) et de façon à recevoir en outre des métadonnées de canal pour les fournisseurs de contenus (412),
un entrepôt de métadonnées de canal (470), ledit entrepôt de métadonnées de canal (470) étant adapté de façon à conserver en mémoire lesdites métadonnées de canal reçues des fournisseurs de contenus (412),
un module d'extracteur de métadonnées de contenu et de mémoire tampon (450), ledit module d'extracteur de métadonnées de contenu et de mémoire tampon (450) étant adapté de façon à extraire des métadonnées pour ledit proxy push (410) d'une enveloppe de métadonnées et de contenus reçue des fournisseurs de contenus (412), ledit module d'extracteur de métadonnées de contenu et de mémoire tampon (450) étant adapté en outre de façon à placer en mémoire tampon lesdites métadonnées sur ledit proxy push (410),
un module de fragmentation de contenus (464), ledit module de fragmentation de contenus (464) étant adapté de façon à diviser une enveloppe de métadonnées et de contenus en segments,
un module d'espace mémoire de messages à récupération différée (452), ledit module d'espace mémoire de messages à récupération différée (452) étant adapté de façon à conserver en mémoire une enveloppe de contenus ou un ou plusieurs segments provenant dudit module de fragmentation de contenus (464),
un module de remplacement et d'expiration de contenus (466), ledit module de remplacement et d'expiration de contenus (466) étant adapté de façon à faire expirer les contenus conservés en mémoire dans le module d'espace mémoire de messages à récupération différée (452) ou de façon à remplacer les contenus conservés en mémoire dans le module d'espace mémoire de messages à récupération différée (452),
un module de dépendances de contenus (462), ledit module de dépendances de contenus (462) étant adapté de façon à fournir une sélection de clients push (510) auxquels annoncer un service,
un ordonnanceur push (454), ledit ordonnanceur push (454) étant adapté de façon à ordonnancer l'envoi d'une enveloppe de contenus conservée en mémoire dans le module d'espace mémoire de messages à récupération différée (452), et
un module de règles et d'abonnement (460), ledit module de règles et d'abonnement (460) étant adapté de façon à entretenir un abonnement entre une application et le fournisseur de contenus (412) et à entretenir une liste de règles relatives à l'abonnement.

2. Le proxy push (410) selon la revendication 1, comprenant en outre des agents push (444) chargés d'envoyer des enveloppes de métadonnées et de contenus à un client push (510).

3. Le proxy push (410) selon la revendication 1 ou 2, comprenant en outre un module de gestion de régulation du flux (442), le module de gestion de régulation du flux (442) étant adapté de façon à recevoir des messages de régulation de flux du client push (510) et de façon à démarrer ou suspendre l'envoi d'enveloppes de métadonnées et de contenus.

4. Le proxy push (410) selon l'une quelconque des revendications 1 à 3, comprenant en outre des courtiers de messages

et des files d'attente de remise (440) destinés à conserver en mémoire et à gérer des enveloppes de métadonnées et de contenus.

5. Un client push (510) destiné à une utilisation dans une architecture de remise de contenus dynamiques, le client push comprenant :

une interface de fournisseur d'applications d'enregistrement d'applications (514) adaptée de façon à enregistrer des applications (512) auprès dudit client push et adaptée en outre de façon à recevoir un descriptif d'application (918) pour lesdites applications, ledit descriptif d'application (918) contenant des métadonnées de canal,
un entrepôt de métadonnées de canal (570) adapté de façon à conserver en mémoire des métadonnées de canal reçues de ladite application (512),
un moyen de communication, ce moyen de communication étant adapté de façon à recevoir une enveloppe de métadonnées et de contenus d'un proxy push (410),
un module d'extracteur de métadonnées de contenu et de mémoire tampon (550), ledit module d'extracteur de métadonnées de contenu et de mémoire tampon (450) étant adapté de façon à extraire des métadonnées pour ledit client push de ladite enveloppe de métadonnées et de contenus et étant adapté en outre de façon à placer en mémoire tampon lesdites métadonnées sur ledit client push,
un gestionnaire de récupération différée (552) adapté de façon à ordonnancer la récupération de contenus du proxy push (410) non encore reçus par le client push (510),
un module de dépendances de contenus (564) adapté de façon à reconstituer des contenus antérieurement divisés en segments,
un module de remplacement et d'expiration de contenus (566), ledit module de remplacement et d'expiration de contenus (566) étant adapté de façon à faire expirer des contenus conservés en mémoire sur ledit client push ou de façon à remplacer des contenus conservés en mémoire sur le client push,
un bloc de notification de mise à jour (562), ledit bloc de notification de mise à jour étant adapté de façon à travailler avec lesdites applications (512) de façon à notifier les applications que de nouveaux contenus sont en attente à leur attention,
un bloc de gestion des abonnements (560), ledit bloc de gestion des abonnements (560) étant adapté de façon à gérer des abonnements entre l'application et un fournisseur de contenus,
un courtier de transfert de contenus (554) adapté de façon à transférer des contenus lorsqu'exigé par le client push, ledit courtier de transfert de contenus (554) étant piloté par ledit gestionnaire de récupération différée (552),

où ledit client push est adapté de façon à enregistrer des applications génériques et à recevoir des contenus de type générique du fournisseur de contenus.

6. Le client push (510) selon la revendication 5, comprenant en outre des agents push (544) destinés à recevoir des enveloppes de métadonnées et de contenus du proxy push (410).

7. Le client push (510) selon la revendication 5 ou 6, comprenant en outre un module de gestion de régulation du flux (542), le module de gestion de régulation du flux (442) étant adapté de façon à envoyer des messages de régulation de flux au proxy push (410) de façon à démarrer ou suspendre l'envoi d'enveloppes de métadonnées et de contenus.

8. Le client push (510) selon l'une quelconque des revendications 5 à 7, comprenant en outre des courtiers de messages et des files d'attente de remise (540) destinés à conserver en mémoire et à gérer des enveloppes de métadonnées et de contenus.

9. Le client push (510) selon l'une quelconque des revendications 5 à 8, où ledit client push comprend en outre un module de traitement de mise à jour en arrière-plan (575) adapté de façon à exécuter des mises à jour en arrière-plan pour des applications non connectées audit client push.

10. Le client push (510) selon l'une quelconque des revendications 5 à 9, où le bloc de notification de mise à jour (562) est adapté de façon à conserver en mémoire des contenus pour lesdites applications dans des emplacements prédéterminés.

11. Le client push (510) selon la revendication 10, où le bloc de notification de mise à jour (562) est adapté de façon à envoyer un message à l'application client signalant que des données ont été placées en mémoire dans les emplacements prédéterminés.

12. Le client push (510) selon l'une quelconque des revendications 5 à 11, où le bloc de notification de mise à jour (562) est adapté de façon à envoyer l'enveloppe de métadonnées et de contenus aux applications.

13. Un procédé d'envoi de contenus dynamiques génériques par l'intermédiaire d'un proxy push (410) d'un système de remise de contenus dynamiques génériques, le procédé comprenant :

l'obtention d'un descriptif de service (962) auprès du proxy push (410), le descriptif de service (962) correspondant à un service d'envoi de contenus dynamiques fourni par un fournisseur de services (120),
l'enregistrement d'un fournisseur de contenus (412) auprès du système de remise de contenus dynamiques génériques par l'enregistrement du fournisseur de contenus auprès du proxy push (410) possédant une interface d'enregistrement de fournisseur de contenus (420) de façon à recevoir des métadonnées de canal du fournisseur de contenus,
la mise en mémoire desdites métadonnées de canal dans un entrepôt de métadonnées de canal (470) associé au proxy push (410),
la réception d'une enveloppe de métadonnées et de contenus sur le proxy push (410) provenant du fournisseur de contenus, et
le traitement de l'enveloppe de métadonnées et de contenus selon les métadonnées de canal.

14. Un procédé selon la revendication 13 comprenant en outre :

l'extraction de métadonnées pour ledit proxy push (410) de ladite enveloppe de métadonnées et de contenus, et le traitement de ladite enveloppe de métadonnées et de contenus selon lesdites métadonnées extraites.

15. Un procédé selon la revendication 14 comprenant en outre le traitement des contenus de ladite enveloppe de métadonnées et de contenus selon lesdites métadonnées extraites.

16. Un procédé selon l'une quelconque des revendications 13 à 15 comprenant en outre la fragmentation d'une enveloppe de métadonnées et de contenus en segments.

17. Un procédé selon la revendication 16 comprenant en outre la mise en mémoire d'un élément parmi les éléments suivants : un contenu, un segment de contenu, une enveloppe de métadonnées et de contenus ou un segment d'enveloppe de métadonnées et de contenus dans un espace mémoire de messages à récupération différée (452).

18. Un procédé selon la revendication 17 comprenant en outre l'une quelconque des opérations suivantes : l'expiration de contenus sensibles au temps conservés en mémoire dans l'espace mémoire de messages à récupération différée (452), le remplacement des contenus conservés en mémoire dans l'espace mémoire de messages à récupération différée (452) par des contenus mis à jour, ou l'ordonnancement de la transmission des contenus de l'espace mémoire de messages à récupération différée (452).

19. Un procédé selon l'une quelconque des revendications 13 à 15 comprenant en outre la détermination d'une sélection de clients push (510) à partir de dépendances de contenus.

20. Un procédé selon la revendication 19 comprenant en outre l'une quelconque des opérations suivantes : la fourniture de la sélection de clients push (510) afin d'annoncer un service à ces derniers ou l'entretien d'un abonnement entre une application et le fournisseur de contenus (412).

21. Un procédé selon la revendication 20 comprenant en outre l'entretien d'une liste de règles relatives à l'abonnement.

22. Un procédé selon l'une quelconque des revendications 13 à 15, 16, 17 ou 18 comprenant en outre la transmission de ladite enveloppe de métadonnées et de contenus à un client push (510).

23. Un procédé selon la revendication 22 comprenant en outre :

la réception de messages de régulation de flux du client push (510), et
la transmission sélective de ladite enveloppe de métadonnées et de contenus au client push comme indiqué par les messages de régulation de flux.

24. Un procédé selon l'une quelconque des revendications 13, 16 ou 17 comprenant en outre la mise en mémoire des

contenus et des métadonnées dans une pluralité de files d'attente de remise (440).

25. Un procédé selon la revendication 24 comprenant en outre la gestion des contenus et des métadonnées conservés en mémoire dans la pluralité de files d'attente de remise en utilisant au moins un courtier de messages (440).

26. Un procédé d'envoi de contenus dynamiques génériques par l'intermédiaire d'un client push (510) d'un système de remise de contenus dynamiques génériques, le procédé comprenant :

l'obtention d'un descriptif d'application (962) auprès d'un client push, le descriptif d'application correspondant à une application (512) traitant des contenus dynamiques transmis vers celle-ci,
l'enregistrement d'une application auprès du système de remise de contenus dynamiques génériques par l'enregistrement de l'application auprès du client push possédant une interface d'enregistrement d'applications (514), ledit descriptif d'application contenant des métadonnées de canal,
la mise en mémoire desdites métadonnées de canal dans un entrepôt de métadonnées de canal (570) associé au client push,
la réception d'une enveloppe de métadonnées et de contenus sur le client push par l'intermédiaire d'un proxy push (410), et
le traitement de l'enveloppe de métadonnées et de contenus selon les métadonnées de canal.

27. Un procédé selon la revendication 26 comprenant en outre :

l'extraction de métadonnées pour ledit client push de ladite enveloppe de métadonnées et de contenus, et
le traitement de ladite enveloppe de métadonnées et de contenus selon lesdites métadonnées extraites.

28. Un procédé selon la revendication 27 comprenant en outre le traitement des contenus de ladite enveloppe de métadonnées et de contenus selon lesdites métadonnées extraites.

29. Un procédé selon l'une quelconque des revendications 26 à 28 comprenant en outre l'ordonnancement de la récupération des contenus qui restent à être reçus par le client push (510) par l'intermédiaire dudit proxy push (410).

30. Un procédé selon la revendication 29 comprenant en outre l'extraction de contenus comme indiqué par un gestionnaire de récupération différée (552) exécutant l'ordonnancement de ladite récupération de contenus.

31. Un procédé selon la revendication 30 comprenant en outre la mise en mémoire d'un élément parmi les éléments suivants : un contenu, un segment de contenu, une enveloppe de métadonnées et de contenus ou un segment d'enveloppe de métadonnées et de contenus sur le client push (510).

32. Un procédé selon la revendication 31 comprenant en outre l'une quelconque des opérations suivantes : l'expiration de contenus sensibles au temps conservés en mémoire sur ledit client push (510), le remplacement des contenus conservés en mémoire sur ledit client push par des contenus mis à jour ou la reconstitution de contenus antérieurement divisés en segments en fonction de dépendances de contenus.

33. Un procédé selon la revendication 26 comprenant en outre l'envoi sélectif de messages de régulation de flux au proxy push (410) de façon à transmettre ladite enveloppe de métadonnées et de contenus au client push (510).

34. Un procédé selon l'une quelconque des revendications 26, 31 ou 32 comprenant en outre la mise en mémoire de contenus et de métadonnées dans une pluralité de files d'attente de remise (540).

35. Un procédé selon la revendication 34 comprenant en outre la gestion des contenus et des métadonnées conservés en mémoire dans la pluralité de files d'attente de remise en utilisant au moins un courtier de messages (540).

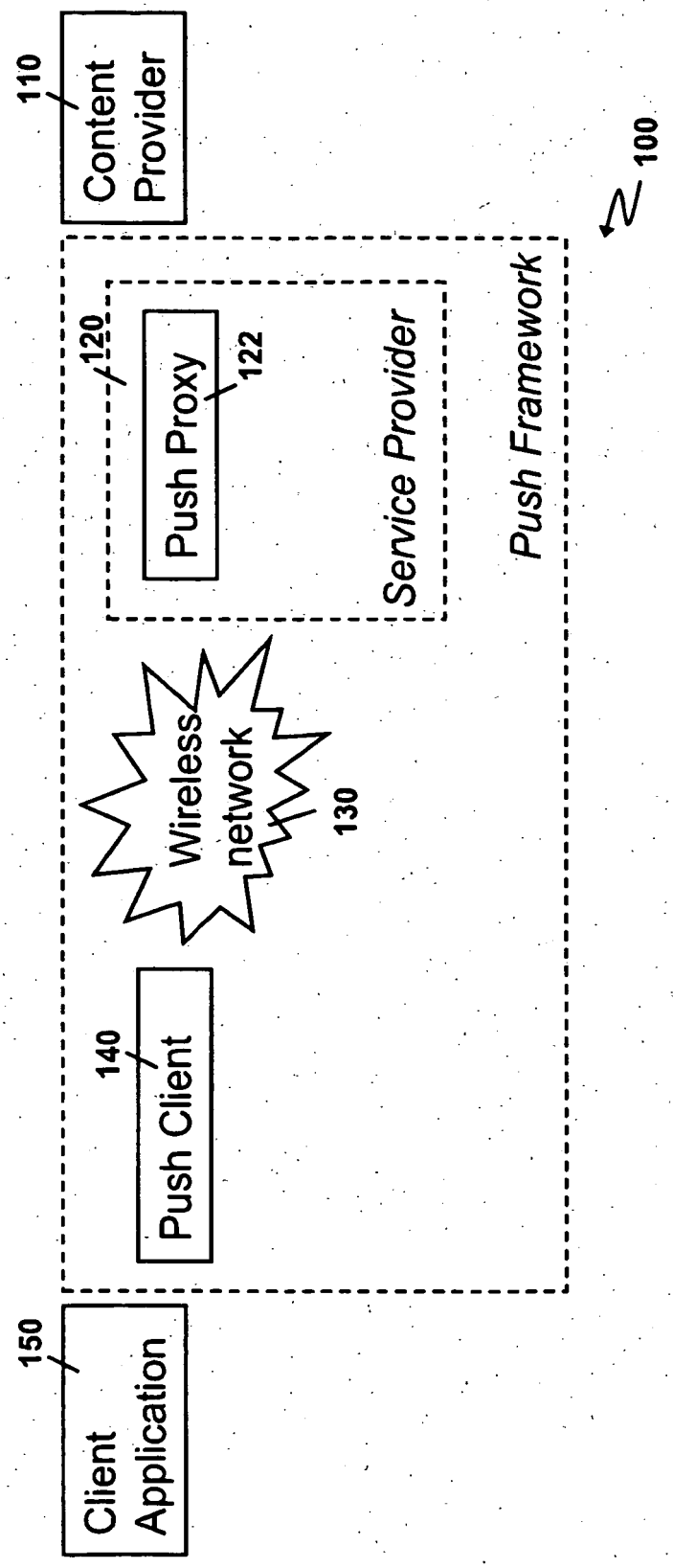
Content Provider
110
100
Push Framework
Service Provider
120
Push Proxy
122
Wireless network
130
Push Client
140
Client Application
150

Fig. 1

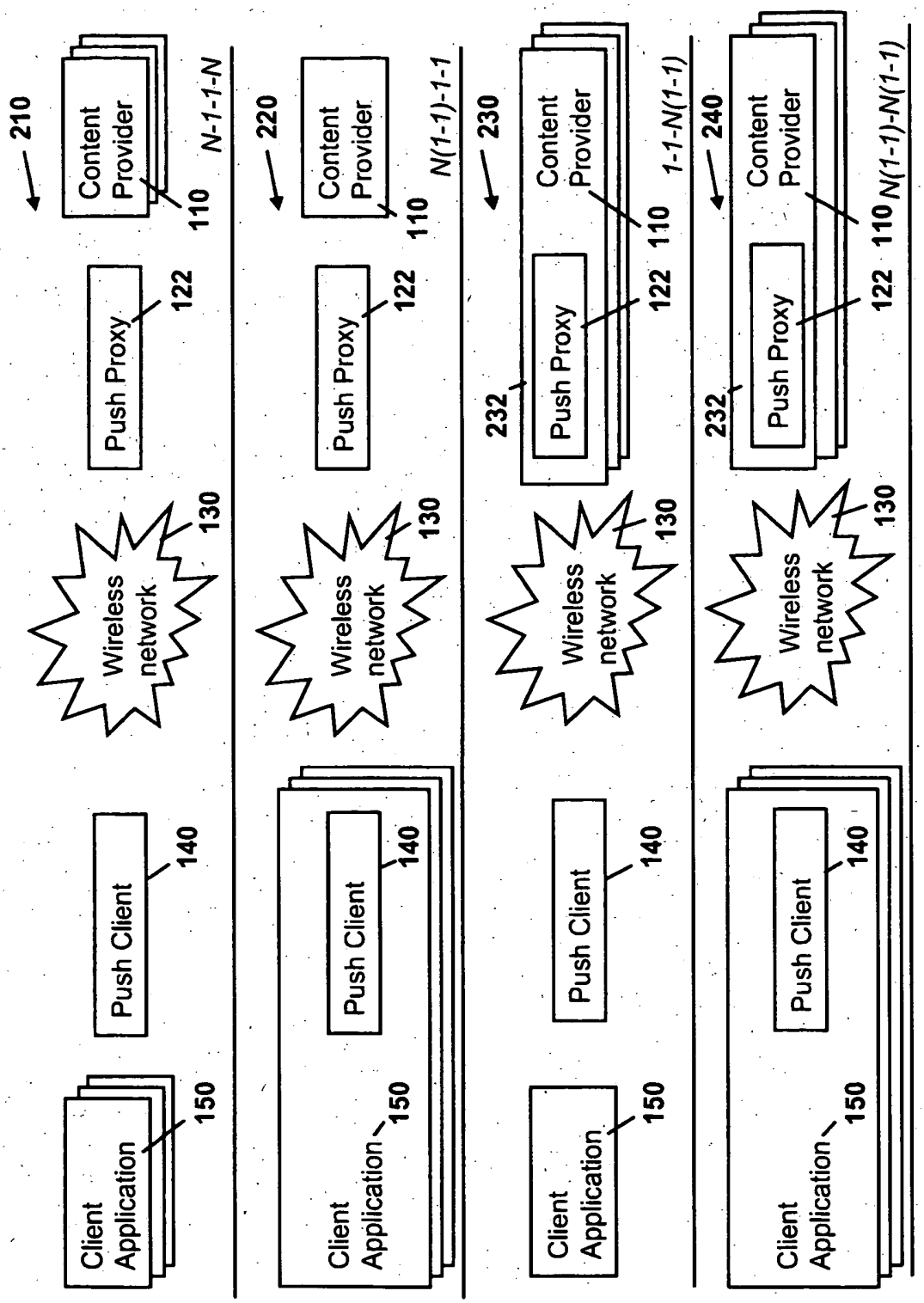
210
Content Provider
110
N-1-1-N
Push Proxy
122
Wireless network
130
Push Client
140
Client Application
150
220
Content Provider
110
N(1-1)-1-1
Push Proxy
122
Wireless network
130
Push Client
140
Client Application
150
230
Content Provider
110
1-1-N(1-1)
Push Proxy
122
232
Wireless network
130
Push Client
140
Client Application
150
240
Content Provider
110
N(1-1)-N(1-1)
Push Proxy
122
232
Wireless network
130
Push Client
140
Client Application
150

Fig. 2

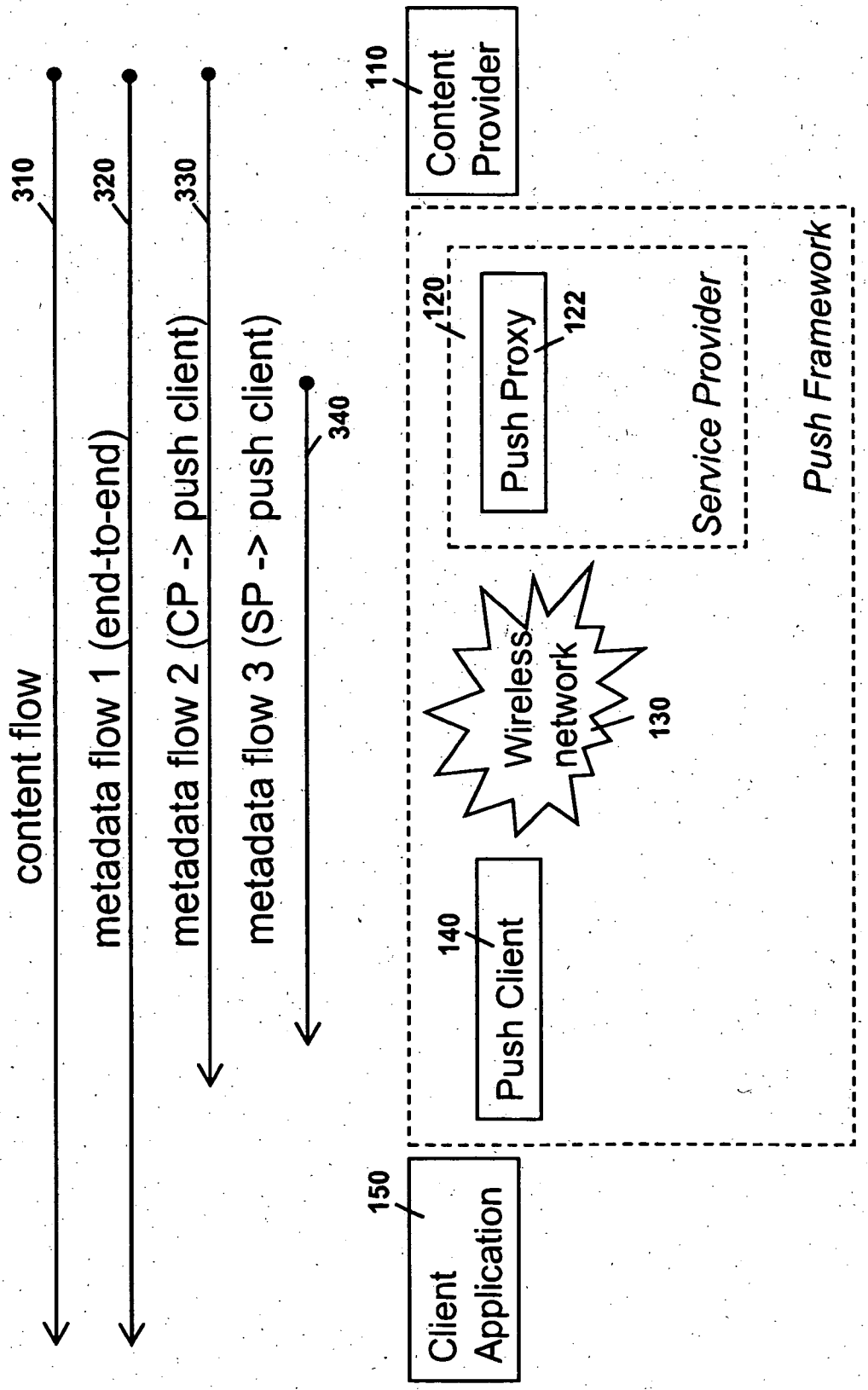
content flow
310
metadata flow 1 (end-to-end)
320
metadata flow 2 (CP -> push client)
330
metadata flow 3 (SP -> push client)
340
Content Provider
110
Push Proxy
122
120
Service Provider
Push Framework
Wireless network
130
Push Client
140
Client Application
150
100

Fig. 3

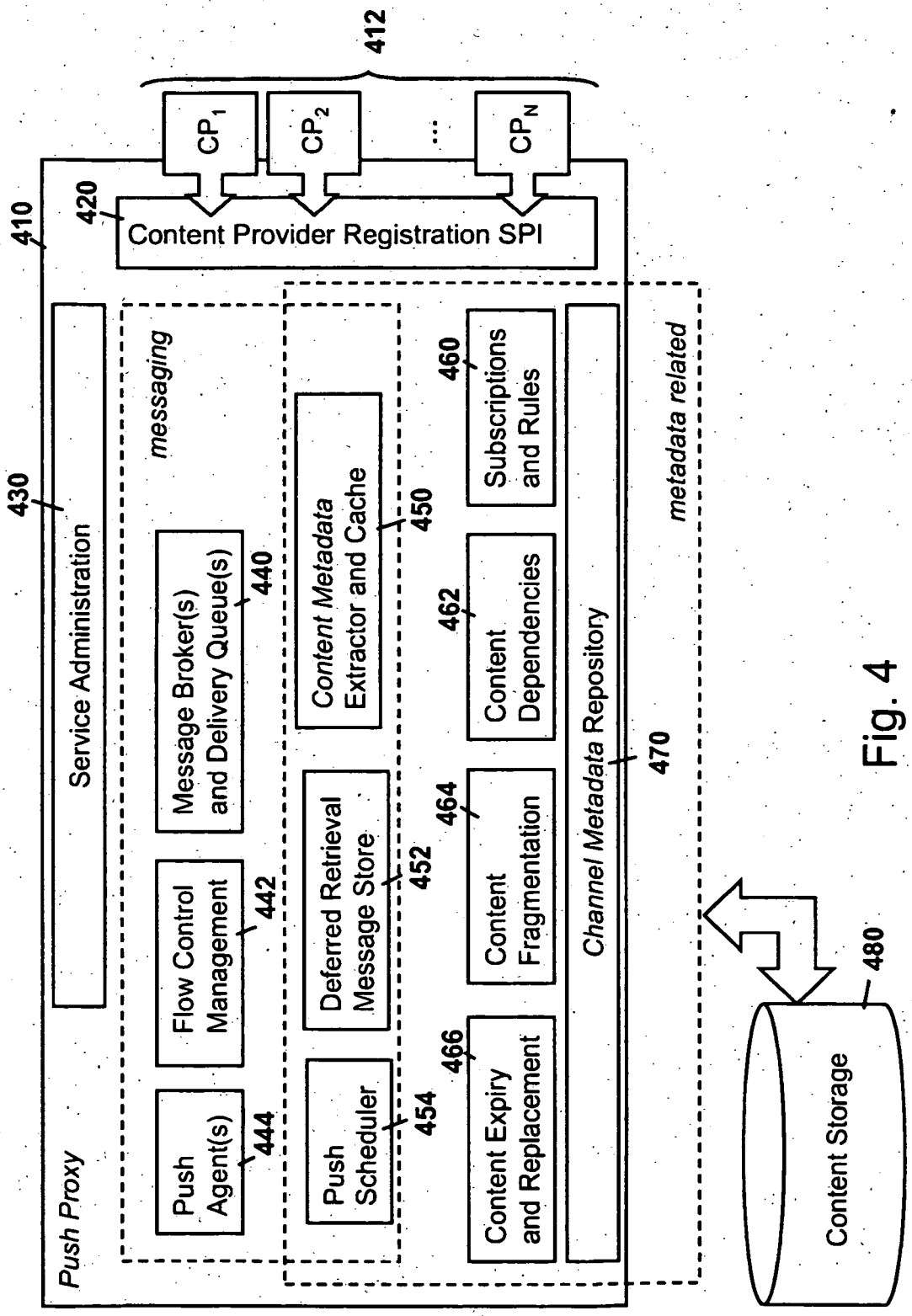
412
CP1
CP2
...
CPN
410
420
Content Provider Registration SPI
430
Service Administration
Push Proxy
messaging
Push Agent(s)
444
Flow Control Management
442
Message Broker(s) and Delivery Queue(s)
440
Push Scheduler
454
Deferred Retrieval Message Store
452
Content Metadata Extractor and Cache
450
Content Expiry and Replacement
466
Content Fragmentation
464
Content Dependencies
462
Subscriptions and Rules
460
Channel Metadata Repository
470
metadata related
Content Storage
480

Fig. 4

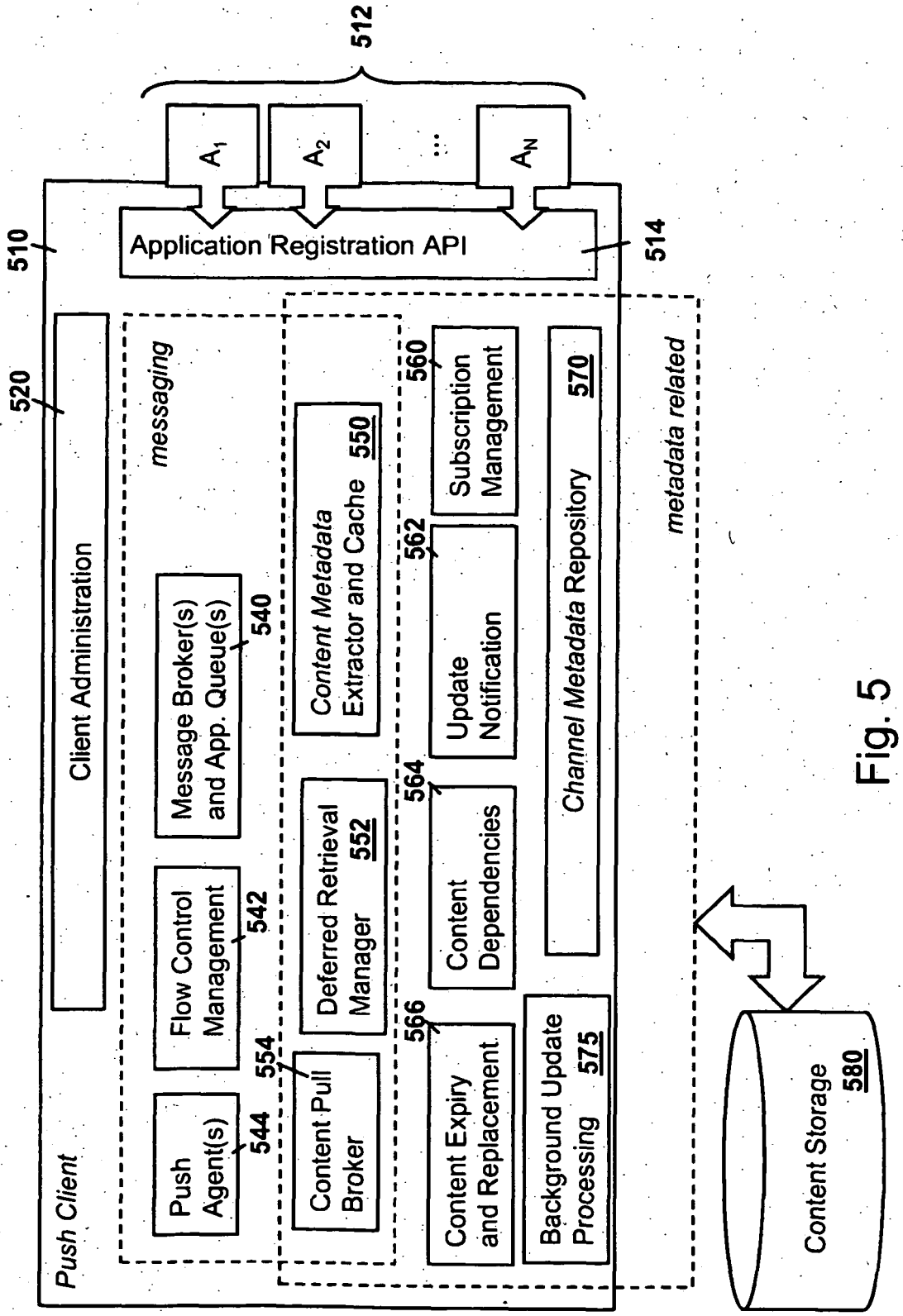
512
A_1
A_2
...
A_N
510
Application Registration API
514
520
Client Administration
messaging
Push Client
Push Agent(s)
544
Flow Control Management
542
Message Broker(s) and App. Queue(s)
540
554
Content Pull Broker
Deferred Retrieval Manager
552
Content Metadata Extractor and Cache
550
566
Content Expiry and Replacement
564
Content Dependencies
562
Update Notification
560
Subscription Management
575
Background Update Processing
570
Channel Metadata Repository
metadata related
Content Storage
580

Fig. 5

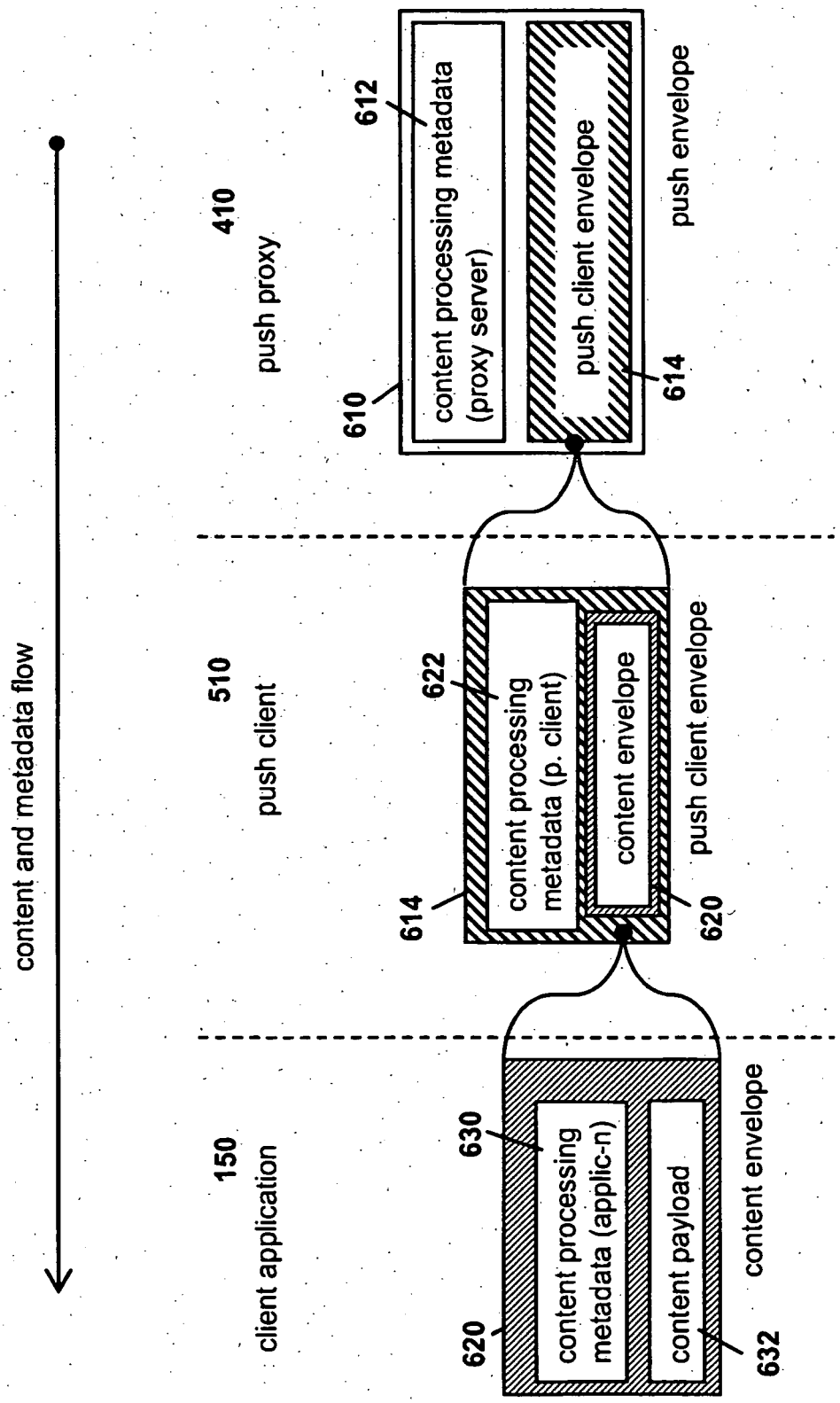
content and metadata flow
410
push proxy
610
content processing metadata (proxy server)
612
push client envelope
614
push envelope
510
push client
614
content processing metadata (p. client)
622
content envelope
620
push client envelope
150
client application
620
content processing metadata (applic-n)
630
content payload
632
content envelope

Fig. 6

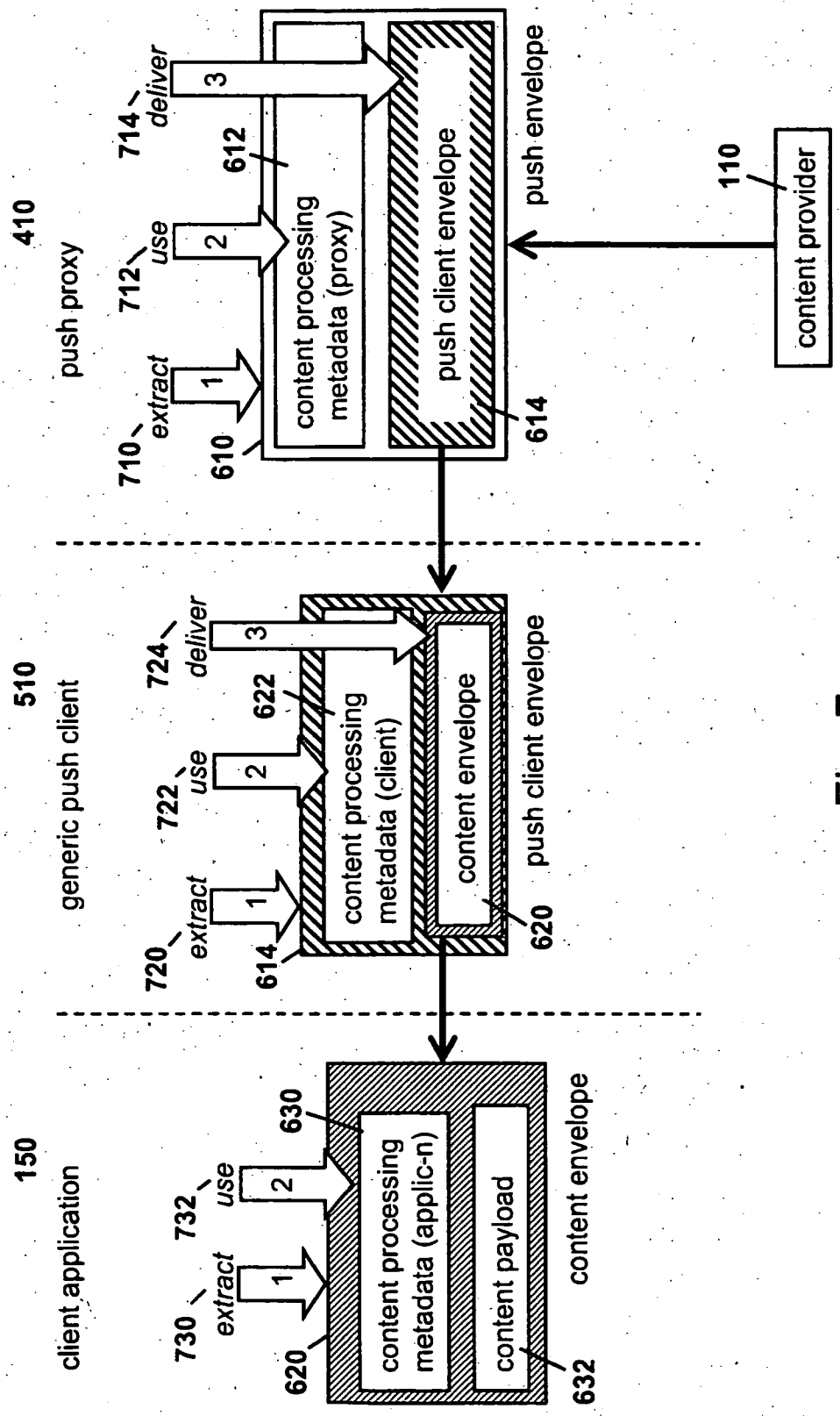
410
push proxy
710
extract
1
712
use
2
714
deliver
3
610
612
content processing metadata (proxy)
push client envelope
614
push envelope
110
content provider
510
generic push client
720
extract
1
722
use
2
724
deliver
3
614
622
content processing metadata (client)
content envelope
620
push client envelope
150
client application
730
extract
1
732
use
2
620
630
content processing metadata (applic-n)
content payload
632
content envelope

Fig. 7

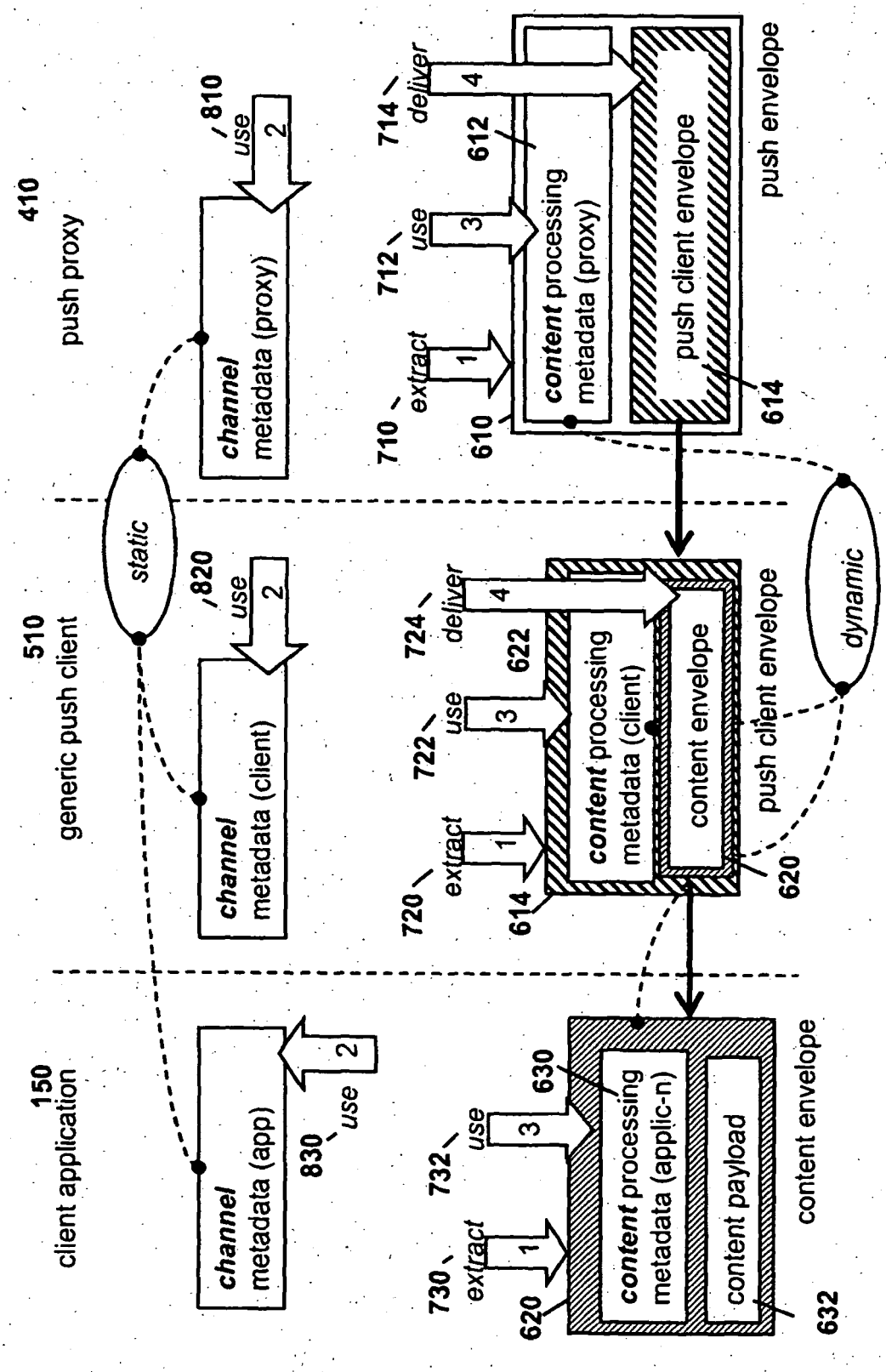
150
client application
510
generic push client
410
push proxy
static
dynamic
channel metadata (app)
830
use
2
channel metadata (client)
820
use
2
channel metadata (proxy)
810
use
2
730
extract
1
732
use
3
630
620
content processing metadata (applic-n)
content payload
632
content envelope
720
extract
1
722
use
3
622
614
content processing metadata (client)
content envelope
620
push client envelope
724
deliver
4
710
extract
1
712
use
3
610
content processing metadata (proxy)
612
714
deliver
4
push client envelope
614
push envelope

Fig. 8

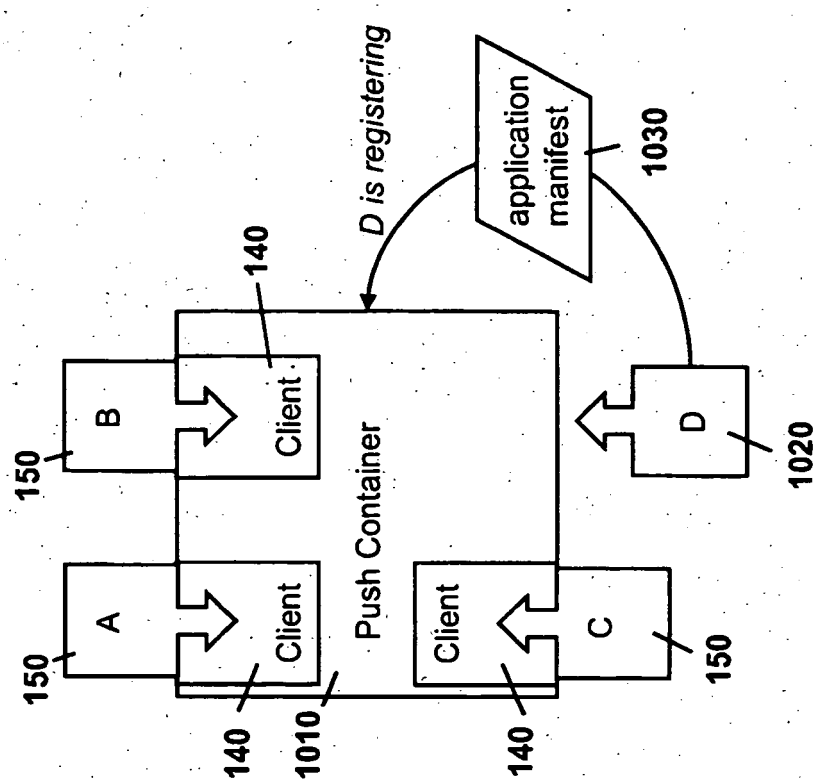
D is registering
application manifest
1030
140
B
150
Client
Push Container
D
1020
A
150
Client
Client
C
150
140
1010
140

Fig. 10

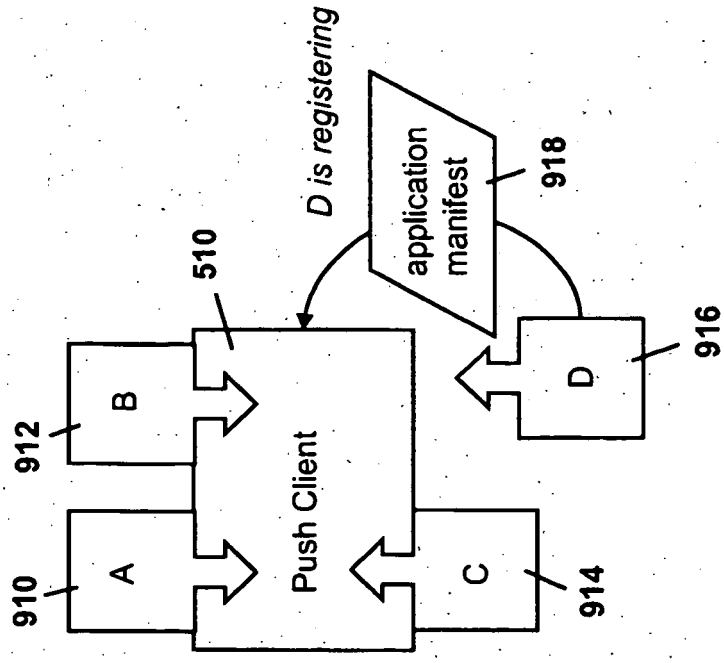
D is registering
application manifest
918
510
B
912
Push Client
D
916
A
910
C
914

Fig. 9

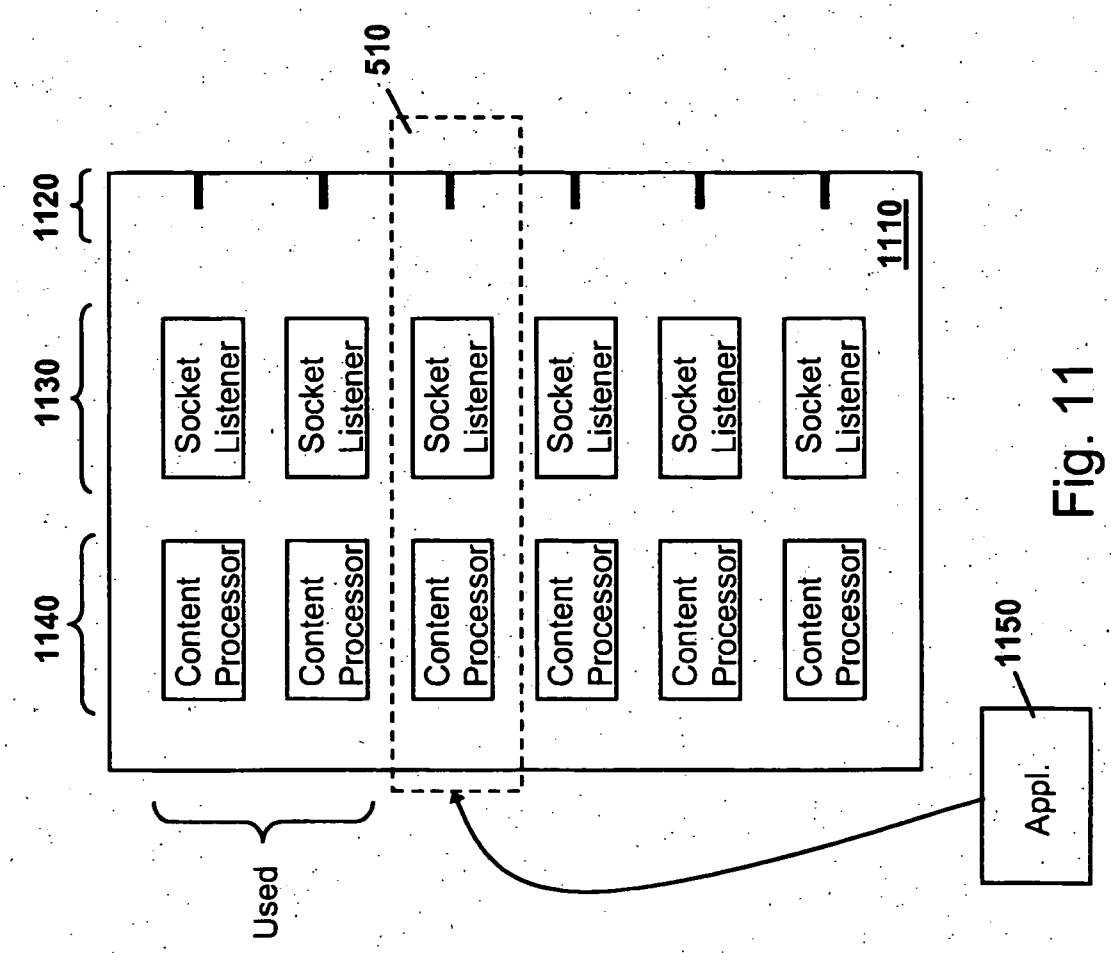
1120
1130
1140
510
Socket Listener
Socket Listener
Socket Listener
Socket Listener
Socket Listener
Socket Listener
Content Processor
Content Processor
Content Processor
Content Processor
Content Processor
Content Processor
1110
Used
1150
Appl.

Fig. 11

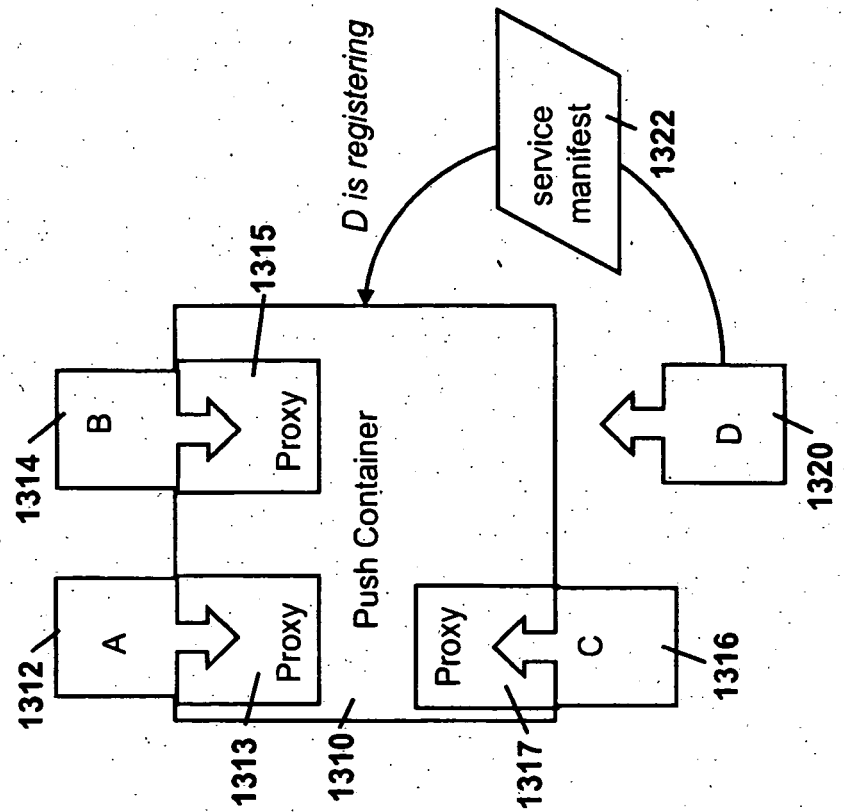
D is registering
service manifest
1322
1315
B
1314
Proxy
Push Container
D
1320
A
1312
Proxy
Proxy
C
1316
1313
1310
1317

Fig. 13

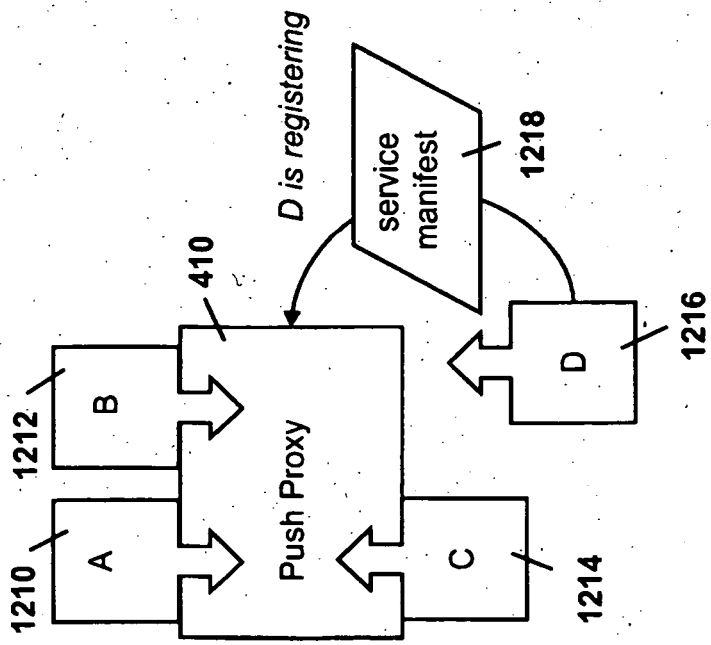
D is registering
service manifest
1218
410
B
1212
Push Proxy
D
1216
A
1210
C
1214

Fig. 12

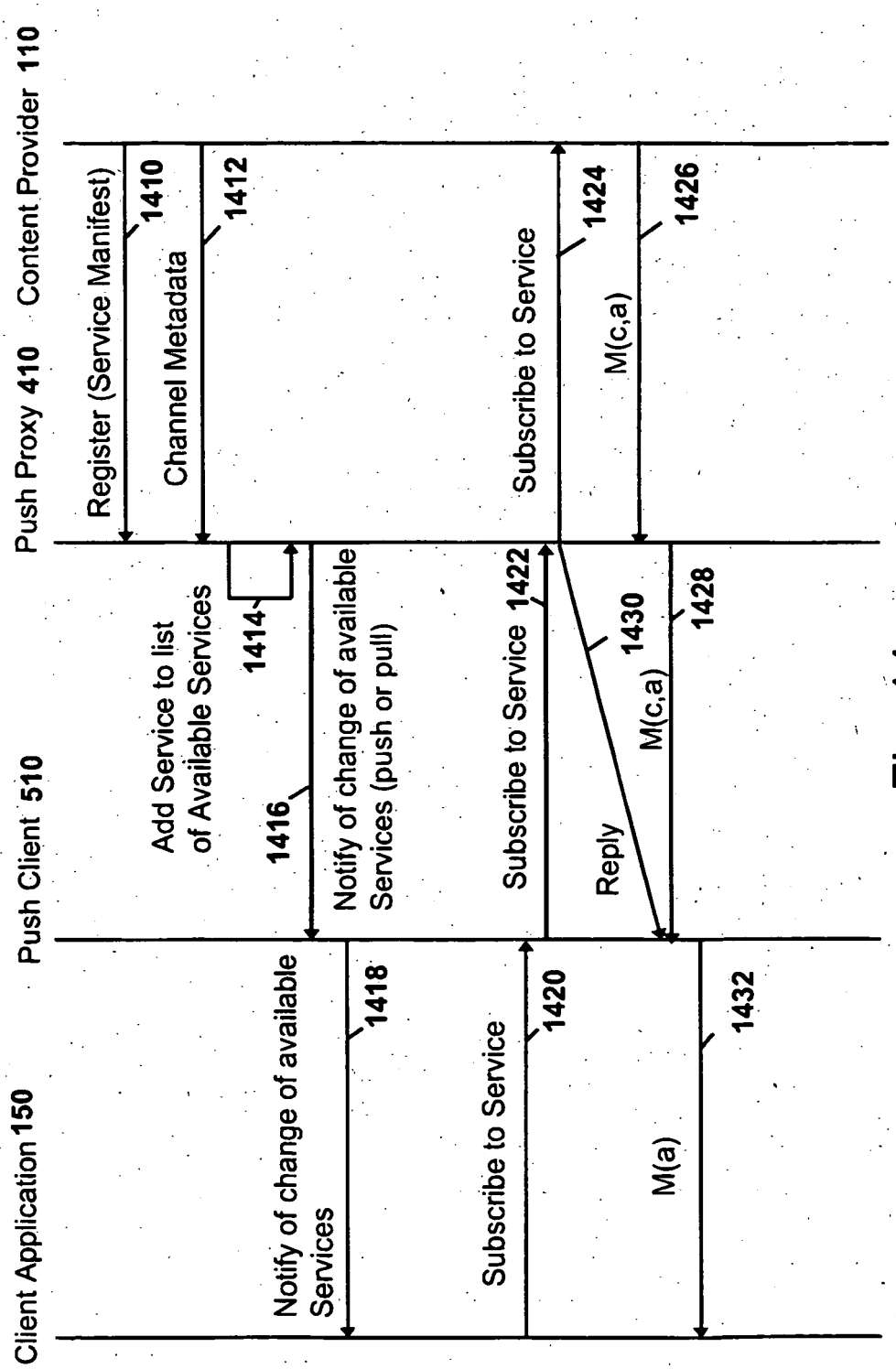
Client Application 150
Push Client 510
Push Proxy 410
Content Provider 110
Register (Service Manifest)
1410
Channel Metadata
1412
Add Service to list of Available Services
1414
1416
Notify of change of available Services (push or pull)
Notify of change of available Services
1418
Subscribe to Service
1420
Subscribe to Service
1422
Subscribe to Service
1424
Reply
1430
M(c,a)
1426
M(c,a)
1428
M(a)
1432

Fig. 14

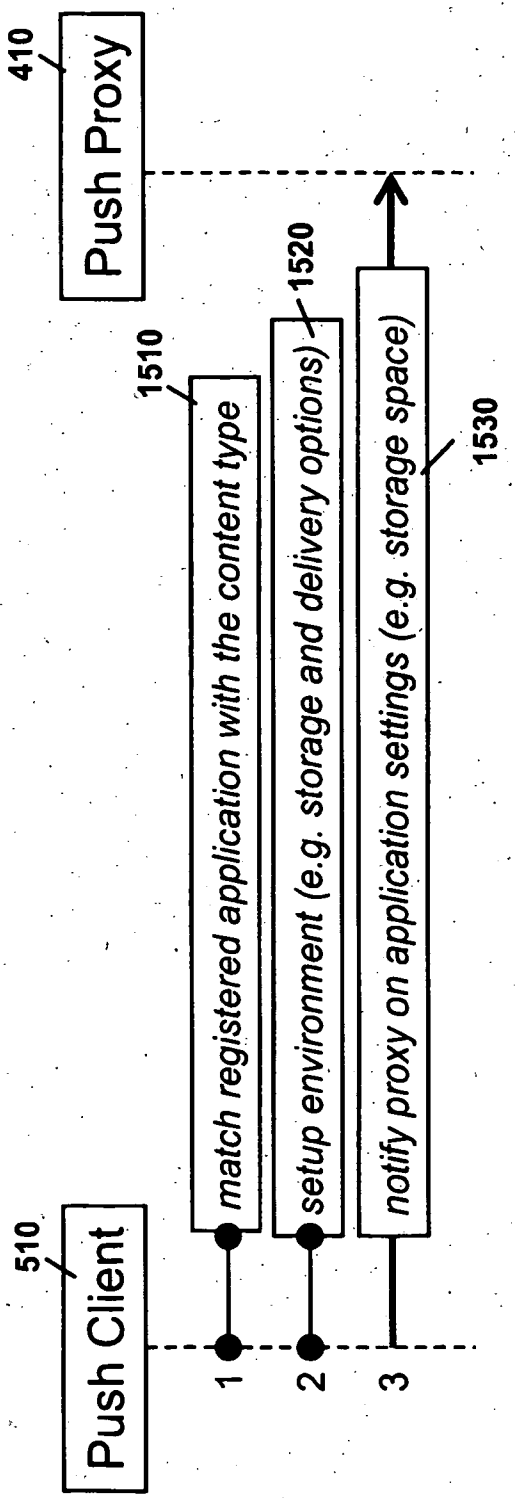
Push Client
510
1
match registered application with the content type
1510
2
setup environment (e.g. storage and delivery options)
1520
3
notify proxy on application settings (e.g. storage space)
1530
Push Proxy
410

Fig. 15

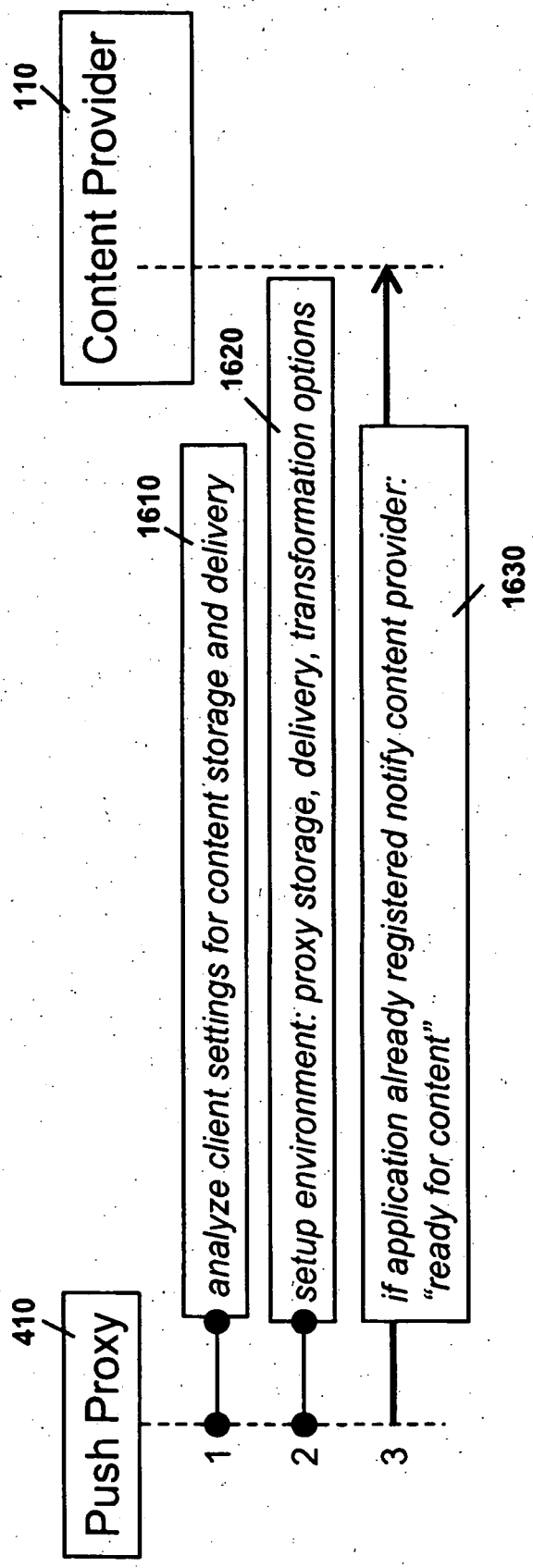
Push Proxy
410
Content Provider
110
1
2
3
analyze client settings for content storage and delivery
1610
setup environment: proxy storage, delivery, transformation options
1620
if application already registered notify content provider:
"ready for content"
1630

Fig. 16

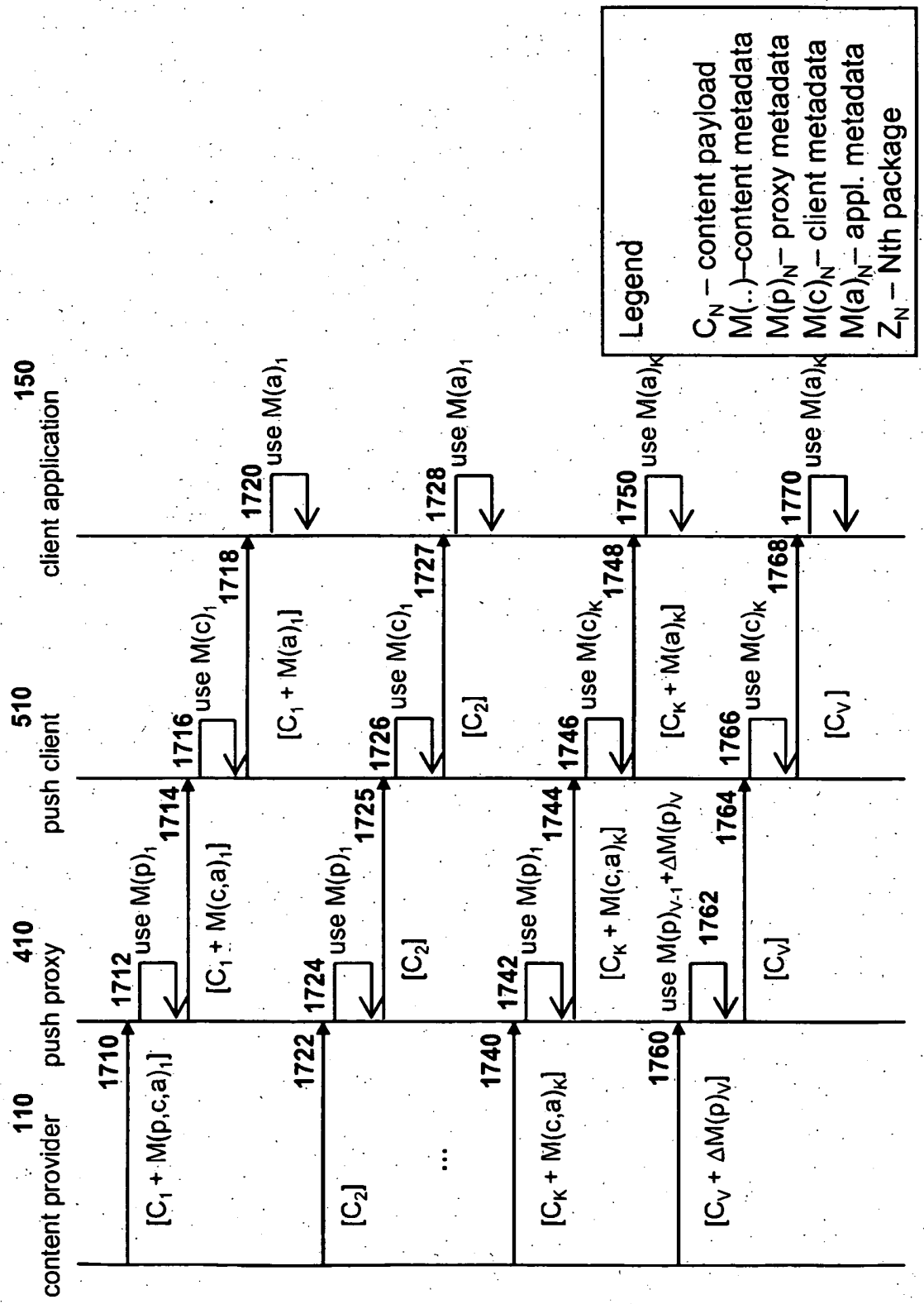
110
content provider
410
push proxy
510
push client
150
client application
1710
[C1 + M(p,c,a)1]
1712
use M(p)1
1714
[C1 + M(c,a)1]
1716
use M(c)1
1718
[C1 + M(a)1]
1720
use M(a)1
1722
[C2]
1724
use M(p)1
1725
[C2]
1726
use M(c)1
1727
[C2]
1728
use M(a)1
1740
[CK + M(c,a)K]
1742
use M(p)1
1744
[CK + M(c,a)K]
1746
use M(c)K
1748
[CK + M(a)K]
1750
use M(a)K
1760
[CV + ΔM(p)V]
1762
use M(p)V-1+ΔM(p)V
1764
[CV]
1766
use M(c)K
1768
[CV]
1770
use M(a)K
Legend
CN – content payload
M(..)–content metadata
M(p)N– proxy metadata
M(c)N– client metadata
M(a)N– appl. metadata
ZN – Nth package

Fig. 17

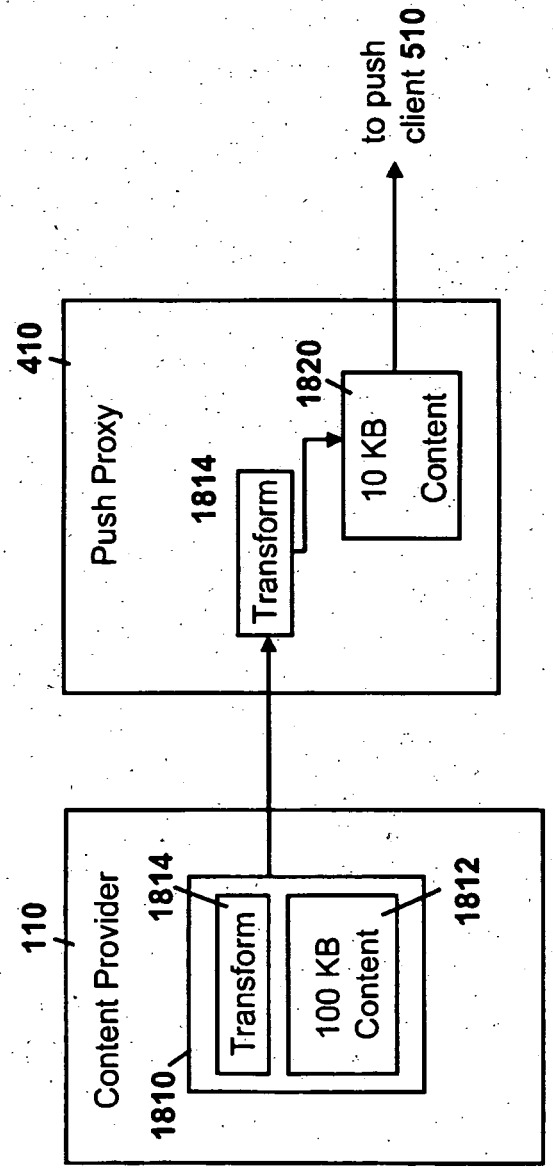
110
Content Provider
1810
1814
Transform
100 KB
Content
1812
410
Push Proxy
1814
Transform
1820
10 KB
Content
to push
client 510

Fig. 18

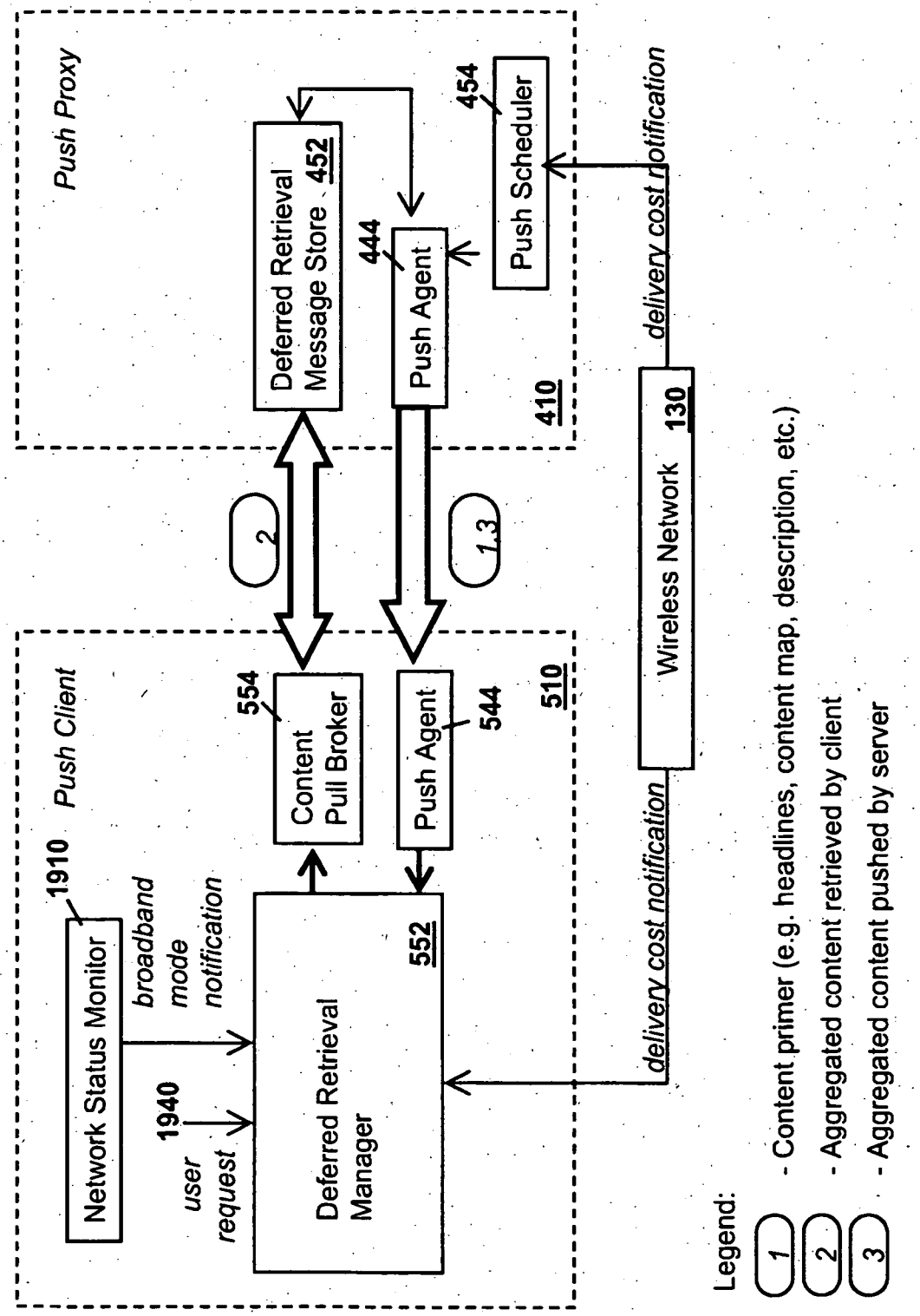
Push Proxy
Deferred Retrieval Message Store 452
Push Agent
444
Push Scheduler
454
410
delivery cost notification
Wireless Network 130
2
1.3
Push Client
510
Content Pull Broker
554
Push Agent
544
1910
Network Status Monitor
broadband mode notification
1940
user request
Deferred Retrieval Manager
552
delivery cost notification
Legend:
1 - Content primer (e.g. headlines, content map, description, etc.)
2 - Aggregated content retrieved by client
3 - Aggregated content pushed by server

Fig. 19

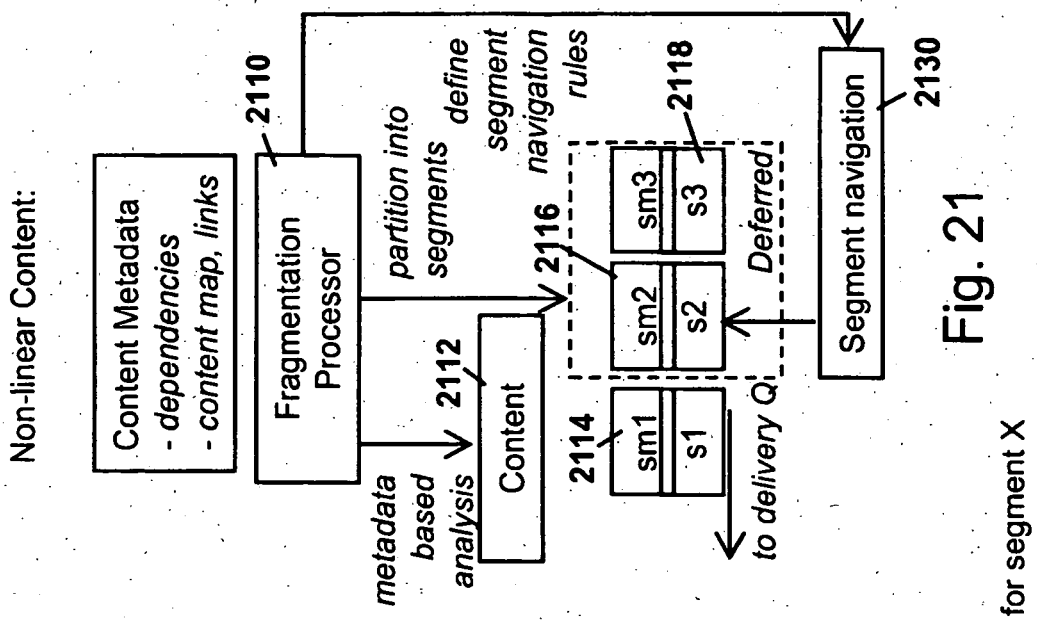
Non-linear Content:
Content Metadata
- dependencies
- content map, links
2110
Fragmentation Processor
partition into segments
define segment navigation rules
2116
2118
sm3
s3
sm2
s2
Deferred
Segment navigation
2130
2112
Content
metadata based analysis
2114
sm1
s1
to delivery Q

Fig. 21

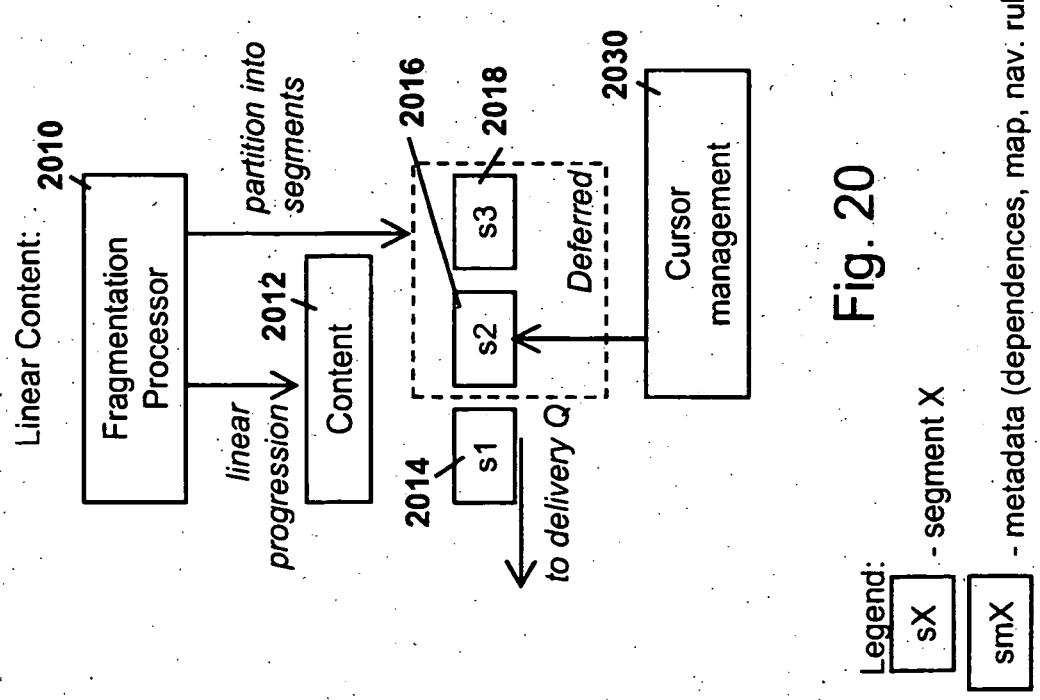
Linear Content:
2010
Fragmentation Processor
partition into segments
2016
2018
s3
2012
Content
s2
Deferred
2030
Cursor management
linear progression
2014
s1
to delivery Q
Legend:
sX
- segment X
smX
- metadata (dependences, map, nav. rules) for segment X

Fig. 20

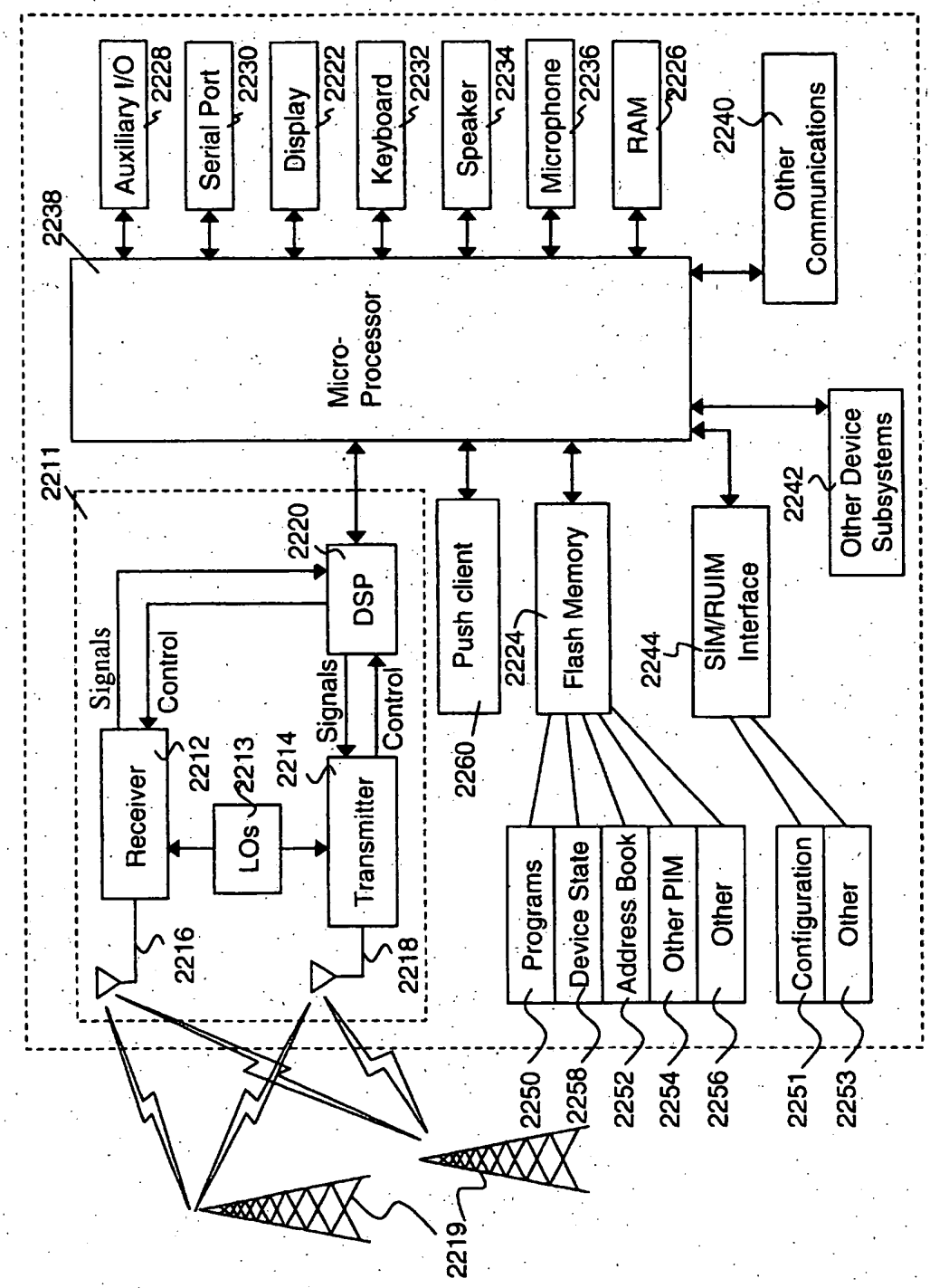
Auxiliary I/O
2228
Serial Port
2230
Display
2222
Keyboard
2232
Speaker
2234
Microphone
2236
RAM
2226
2240
Other Communications
2238
Micro-Processor
2211
2220
DSP
Signals
Control
Signals
Control
Receiver
2212
2213
LOs
2214
Transmitter
2216
2218
Push client
2260
2224
Flash Memory
2244
SIM/RUIM Interface
2242
Other Device Subsystems
Programs
Device State
Address Book
Other PIM
Other
Configuration
Other
2250
2258
2252
2254
2256
2251
2253
2219

FIG. 22